Model created in COMSOL Multiphysics 6.4

Flow in a Fractured Reservoir

This model is licensed under the COMSOL Software License Agreement 6.4.
All trademarks are the property of their respective owners. See www.comsol.com/trademarks.

Introduction

This model shows how to set up a simulation of flow through a fractured reservoir. The reservoir includes a discrete fracture network (DFN), where the fractures have a randomized distribution of position, size, orientation, and aperture. The model uses the Discrete Fracture Network add-in to create randomized fractures in an existing geometry.

Model Definition

The model geometry is depicted in Figure 1.

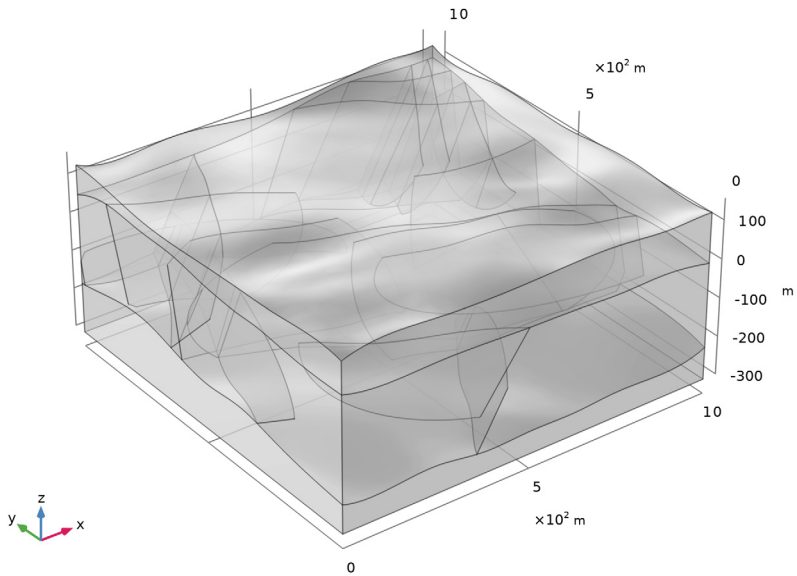

Figure 1: Model geometry.

The fracture network in the middle layer is created using the Discrete Fracture Network — 3D add-in. It serves as an example of how to use the add-in. The fracture positions follow a uniform random distribution function, their sizes follow a power-law distribution function, and their orientations follow a Fisher distribution. Details about these distribution functions can be found in the documentation of the add-in. The model is designed in such a way that the results are always identical provided that you follow the instructions. The DFN is reproducible because the same random seed is used for all distributions. The individual steps can nevertheless be applied to basically any DFN. Since

the add-in can be used to create fracture networks of any complexity, which places high demands on the processing of the geometry, it is recommended to use the CAD kernel.

Beside the geometry, the add-in also generates variables for the aperture $\mathrm{d_f}$ (m) of the fractures and uses them in a fracture flow feature according to the cubic law. It defines the fracture permeability as

$$\kappa_{\mathrm{f}} = \frac{d_{\mathrm{f}}^2}{12 f_{\mathrm{f}}}$$

with $\mathrm{f_f}$ being the fracture's friction factor. The flow is driven by the gradient of the pressure p (Pa) only, which is described by Darcy's law

$$\mathbf{u} = -\frac{\kappa}{\mu}(\nabla p + \rho \mathbf{g})$$

together with mass conservation

$$\nabla \cdot (\rho \mathbf{u}) = 0$$

with κ (m^2) being the porous matrix permeability, and μ (Pa·s) and ρ ($\mathrm{kg/m^3}$) the dynamic viscosity and density of water, respectively. In the fractures, the tangential form of Darcy's Law is the governing equation.

From above, the reservoir is fed by a precipitation rate and in the lower layer there is a slow flow through a slight gradient in the hydraulic head.

Results and Discussion

The resulting velocity distribution is shown in Figure 2. Comparing the velocity inside the porous matrix with the velocity field inside the fractures shows that the flow mainly occurs through the fractures.

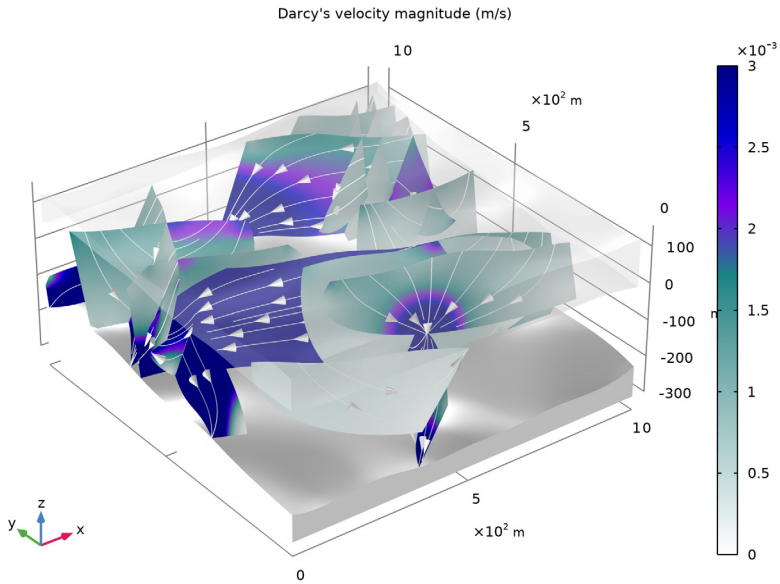

Figure 2: Velocity distribution in the reservoir.

Application Library path: `Subsurface_Flow_Module/Fluid_Flow/fractured_reservoir_flow`

Modeling Instructions

From the **File** menu, choose **New**.

NEW

In the **New** window, click **Model Wizard**.

MODEL WIZARD

1 In the **Model Wizard** window, click **3D**.

2 In the **Select Physics** tree, select **Fluid Flow** > **Porous Media and Subsurface Flow** > **Darcy's Law (dl)**.

3 Click **Add**.

4 Click **Study**.

5 In the **Select Study** tree, select **General Studies** > **Stationary**.

6 Click **Done**.

GEOMETRY 1

Using the CAD kernel is recommended for modeling 3D discrete fracture networks, especially with increasing complexity of the network. A note appears at the bottom of the add-in's settings window if it is not activated.

1 In the **Geometry** toolbar, click **Insert Sequence** and choose **Insert Sequence**.

2 Browse to the model's Application Libraries folder and double-click the file `fractured_reservoir_flow_geom_sequence.mph`.

3 In the **Geometry** toolbar, click **Build All**.

For generating a fracture network consisting of fractures that use randomized distribution functions for size, position and orientation, import the Discrete Fracture Network - 3D add-in.

In the **Home** toolbar, click **Windows** and choose **Add-in Libraries**.

ADD-IN LIBRARIES

1 In the **Model Builder** window, under **Component 1 (comp1)** click **Geometry 1**.

2 In the **Add-in Libraries** window, select **Subsurface Flow Module** > **discrete_fracture_network_3d** in the tree.

3 In the tree, select the checkbox for the node **Subsurface Flow Module** > **discrete_fracture_network_3d** (if it is not already selected).

4 Click **Done** to load the add-in and close the **Add-in Libraries** window.

5 In the **Developer** toolbar, click **Add-ins** and choose **Discrete Fracture Network — 3D** > **Discrete Fracture Network — 3D**.

GLOBAL DEFINITIONS

Discrete Fracture Network — 3D 1

1 In the **Model Builder** window, under **Global Definitions** click **Discrete Fracture Network — 3D 1**.

2 In the **Settings** window for **Discrete Fracture Network - 3D**, locate the **General** section.

3 In the **Number of Fractures** text field type 10.

Because a geometry is present, the add-in determines the bounding box of this geometry and also detects if domain selections are available.

4 From the **Selection** menu choose **Middle** which is a selection already defined in the geometry sequence.

5 In the **Settings** window for **Discrete Fracture Network - 3D**, locate the **Size** section.

6 Enter the following settings:

Parameter	Value
Minimum axis length	200
Maximum axis length	500
Power law exponent	2.2

7 Click the **Use random seed** checkbox to get a reproducible size distribution. Whenever the add-in uses these size parameters and this random seed the size distribution and position is identical.

8 In the **Settings** window for **Discrete Fracture Network - 3D**, locate the **Orientation** section.

9 Enter the following settings:

Parameter	Value
Strike	30
Dip	85
Dispersion coefficient	50

The dispersion coefficient determines the variance around the strike and dip angle. The larger the value, the smaller the deviation from the given angles.

10 Click the **Use random seed** checkbox to get a reproducible orientation distribution.

11 In the **Settings** window for **Discrete Fracture Network - 3D**, locate the **Properties** section.

12 In the **Proportionality factor** text field enter 1e-5.

13 In the **Settings** window for **Discrete Fracture Network — 3D**, click the **Add Fracture Network to Selected Component and Interface** button in the window toolbar.

GEOMETRY 1

Click the **Wireframe Rendering** button in the **Graphics** toolbar to get a better view.

Add another fracture set with different values.

GLOBAL DEFINITIONS

1 In the **Model Builder** window, under **Global Definitions** click **Discrete Fracture Network — 3D 1**.

2 In the **Settings** window for **Discrete Fracture Network - 3D**, locate the **General** section.

3 In the **Number of Fractures** text field type 6.

4 In the **Settings** window for **Discrete Fracture Network - 3D**, locate the **Size** section.

5 Enter 19820308 for the random seed to create a new size distribution.

6 In the **Settings** window for **Discrete Fracture Network - 3D**, locate the **Orientation** section.

7 Enter the following settings:

Parameter	Value
Strike	125
Dip	70

8 Enter 19820308 for the random seed.

9 In the **Settings** window for **Discrete Fracture Network — 3D**, click the **Add Fracture Network to Selected Component and Interface** button in the window toolbar to add a second fracture set.

GEOMETRY 1

In the **Geometry** toolbar, click **Build All**.

All Fractures

Now create a selection that contains all fractures.

1 In the **Geometry** toolbar, click **Selections** and choose **Union Selection**.

2 In the **Settings** window for **Union Selection**, locate the **Geometric Entity Level** section.

3 From the **Level** list, choose **Boundary**.

4 Locate the **Input Entities** section. Click **Add**.

5 In the **Add** dialog, in the **Selections to add** list, choose **Fracture network (3D Fracture Network 1 1)** and **Fracture network (3D Fracture Network 2 1)**.

6 Click **OK**.

7 In the **Settings** window for **Union Selection**, type `All Fractures` in the **Label** text field.

Disable the auto-analysis of the geometry as the remaining small geometric details should be kept.

8 In the **Model Builder** window, click **Geometry 1**.

9 In the **Settings** window for **Geometry**, locate the **Cleanup** section.

10 Clear the **Automatic detection of small details** checkbox.

11 In the **Geometry** toolbar, click **Build All**.

12 Click the **Go to XY View** button in the **Graphics** toolbar and compare with the image below.

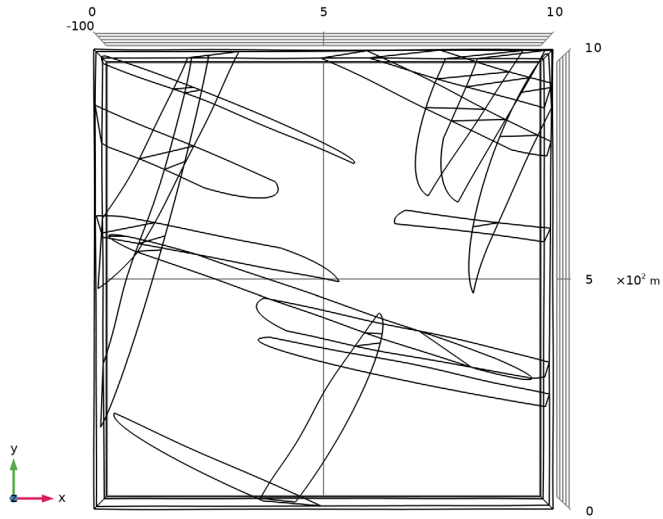

13 Click the **Go to Default View** button in the **Graphics** toolbar to return to the default view.

Next, add the materials. The top and bottom layers consist of a permeable material, whereas the center layer has a comparatively low permeability. The values are specified later after the physics is set up.

ADD MATERIAL

1 In the **Materials** toolbar, click **Add Material** to open the **Add Material** window.

2 Go to the **Add Material** window.

3 In the tree, select **Built-in** > **Water, liquid**.

4 Click the **Add to Global Materials** button in the window toolbar.

5 In the **Materials** toolbar, click **Add Material** to close the **Add Material** window.

DEFINITIONS

The surface is exposed to the environment. Create ambient conditions and define a precipitation rate.

Ambient Properties 1 (ampr1)

1 In the **Model Builder** window, expand the **Component 1 (comp1)** > **Definitions** node.

2 Right-click **Definitions** and choose **Shared Properties** > **Ambient Properties**.

3 In the **Settings** window for **Ambient Properties**, locate the **Ambient Conditions** section.

4 In the $P_{0,\mathrm{amb}}$ text field, type `550[mm/a]`.

DARCY'S LAW (DL)

Next, set up the physics. Start with activating gravity. Define the reference position as the lowest point of the reservoir.

1 In the **Model Builder** window, under **Component 1 (comp1)** click **Darcy's Law (dl)**.

2 In the **Settings** window for **Darcy's Law**, locate the **Gravity Effects** section.

3 Select the **Include gravity** checkbox.

Gravity 1

1 In the **Model Builder** window, under **Component 1 (comp1)** > **Darcy's Law (dl)** click **Gravity 1**.

2 In the **Settings** window for **Gravity**, locate the **Gravity** section.

3 Select the **Specify reference position** checkbox.

4 Specify the $\mathbf{r}_{\mathrm{ref}}$ vector as

0	x
0	y
-300	z

The add-in automatically created aperture variables under the **Definitions** node, which are used by the cubic law.

MATERIALS

It remains to set up the missing material properties.

Highly permeable

1 In the **Model Builder** window, under **Component 1 (comp1)** right-click **Materials** and choose **More Materials** > **Porous Material**.

2 In the **Settings** window for **Porous Material**, type `Highly permeable` in the **Label** text field.

3 Locate the **Porosity** section. In the ε_p text field, type `0.25`.

4 Locate the **Homogenized Properties** section. In the table, enter the following settings:

Property	Variable	Value	Unit	Property group
Permeability	kappa_iso ; kappaii = kappa_iso, kappaij = 0	`1000[mD]`	m²	Basic

5 Locate the **Phase-Specific Properties** section. Click **Add Required Phase Nodes**.

Weakly permeable

1 Right-click **Materials** and choose **More Materials** > **Porous Material**.

2 Select Domain 2 only.

3 In the **Settings** window for **Porous Material**, locate the **Geometric Entity Selection** section.

4 From the **Selection** list, choose **Middle**.

5 In the **Label** text field, type `Weakly permeable`.

6 Locate the **Porosity** section. In the ε_p text field, type `0.1`.

7 Locate the **Homogenized Properties** section. In the table, enter the following settings:

Property	Variable	Value	Unit	Property group
Permeability	kappa_iso ; kappaii = kappa_iso, kappaij = 0	`20[mD]`	m²	Basic

8 Locate the **Phase-Specific Properties** section. Click **Add Required Phase Nodes**.

Material Link 1 (matlnk1)

1 Right-click **Materials** and choose **More Materials** > **Material Link**.

2 In the **Settings** window for **Material Link**, locate the **Geometric Entity Selection** section.

3 From the **Geometric entity level** list, choose **Boundary**.

4 From the **Selection** list, choose **All Fractures**.

DARCY'S LAW (DL)

Next, define the boundary conditions.

Precipitation 1

1 In the **Physics** toolbar, click **Boundaries** and choose **Precipitation**.

2 Select Boundary 10 only.

3 In the **Settings** window for **Precipitation**, locate the **Precipitation** section.

4 From the P_0 list, choose **Ambient precipitation rate (ampr1)**.

5 Select the **Slope correction** checkbox.

Hydraulic Head 1

1 In the **Physics** toolbar, click **Boundaries** and choose **Hydraulic Head**.

2 Select Boundaries 1, 2, 25, and 80 only.

3 In the **Settings** window for **Hydraulic Head**, locate the **Hydraulic Head** section.

4 In the H_0 text field, type `0.5[m/km]*x`.

MESH 1

Next, set up the mesh. For discrete fracture networks the mesh may require manual modifications due to the complexity of the geometry. Start by meshing the domain where the fractures are located.

1 In the **Model Builder** window, under **Component 1 (comp1)** click **Mesh 1**.

2 In the **Settings** window for **Mesh**, locate the **Physics-Controlled Mesh** section.

3 From the **Element size** list, choose **Finer**.

4 Locate the **Sequence Type** section. From the list, choose **User-controlled mesh**.

Size

1 In the **Model Builder** window, under **Component 1 (comp1)** > **Mesh 1** click **Size**.

2 In the **Settings** window for **Size**, locate the **Element Size Parameters** section.

3 In the **Maximum element size** text field, type 40.

Free Tetrahedral 1

1 In the **Model Builder** window, click **Free Tetrahedral 1**.

2 In the **Settings** window for **Free Tetrahedral**, locate the **Domain Selection** section.

3 From the **Geometric entity level** list, choose **Domain**.

4 From the **Selection** list, choose **Middle**.

Size 1

1 Right-click **Free Tetrahedral 1** and choose **Size**.

2 In the **Settings** window for **Size**, locate the **Element Size** section.

3 From the **Predefined** list, choose **Extra fine**.

4 Click the **Custom** button.

5 Locate the **Element Size Parameters** section.

6 Select the **Maximum element size** checkbox. In the associated text field, type 30.

Free Tetrahedral 2

1 In the **Mesh** toolbar, click **Free Tetrahedral**.

2 In the **Settings** window for **Free Tetrahedral**, click **Build All**.

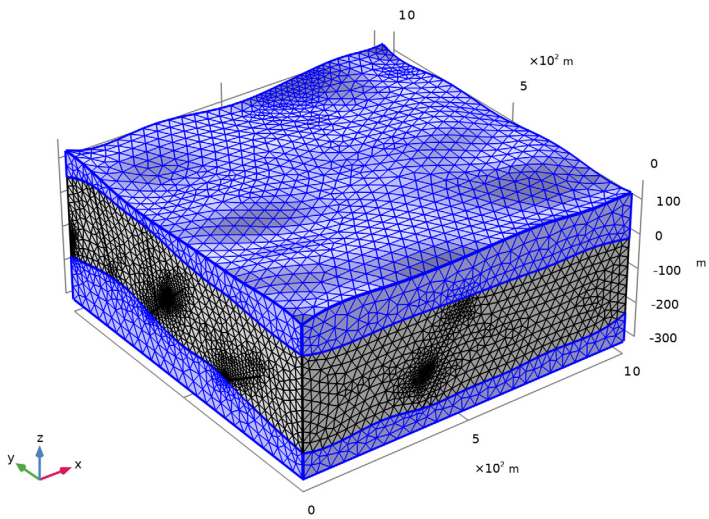

The fractures create fine details in the geometry that are difficult to handle for the mesh. Where these details are located is indicated in an information node below the feature.

With a mesh fine enough, you can resolve these details well, but for the overall model, such a fine mesh is not necessary.

The mesh is relatively fine to capture the geometric details properly. For the pressure field, higher-order elements do not significantly improve accuracy because the underlying physics is relatively smooth. Therefore, use linear discretization for pressure.

DARCY'S LAW (DL)

1 In the **Model Builder** window, under **Component 1 (comp1)** click **Darcy's Law (dl)**.

2 In the **Settings** window for **Darcy's Law**, click to expand the **Discretization** section.

3 From the **Pressure** list, choose **Linear**.

STUDY 1

1 In the **Model Builder** window, click **Study 1**.

2 In the **Settings** window for **Study**, locate the **Study Settings** section.

3 Clear the **Generate default plots** checkbox.

4 In the **Study** toolbar, click **Compute**.

RESULTS

Volume Average 1

1 In the **Model Builder** window, expand the **Results** node.

2 Right-click **Results** > **Derived Values** and choose **Average** > **Volume Average**.

3 In the **Settings** window for **Volume Average**, locate the **Selection** section.

4 From the **Selection** list, choose **Middle**.

Locate the **Expressions** section. In the table, enter `dl.U`. The unit `m/s` and the description `Total Darcy velocity magnitude` are then added automatically.

5 Click **Evaluate**.

TABLE 1

1 Go to the **Table 1** window.

The velocity is around 1e-9 m/s.

RESULTS

Surface Average 2

1 In the **Results** toolbar, click **More Derived Values** and choose **Average** > **Surface Average**.

2 In the **Settings** window for **Surface Average**, locate the **Selection** section.

3 From the **Selection** list, choose **All Fractures**.

4 Locate the **Expressions** section. In the table, enter the following settings:

Expression	Unit	Description
`dl.U`	`m/s`	`Total Darcy velocity magnitude`

5 Click ▾ next to **Evaluate**, then choose **Table 1 - Volume Average 1**.

TABLE 1

1 Go to the **Table 1** window.

The velocity in the fractures is around 1.7mm/s and thus orders of magnitudes larger than in the matrix.

RESULTS

Create the plot of the Darcy velocity field (Figure 2).

Velocity

1 In the **Results** toolbar, click **3D Plot Group**.

2 In the **Settings** window for **3D Plot Group**, type `Velocity` in the **Label** text field.

3 Locate the **Plot Settings** section. Clear the **Plot dataset edges** checkbox.

4 Click to expand the **Title** section. From the **Title type** list, choose **Manual**.

5 In the **Title** text area, type `Darcy's velocity magnitude (m/s)`.

Surface 1

1 Right-click **Velocity** and choose **Surface**.

2 In the **Settings** window for **Surface**, locate the **Expression** section.

3 In the **Expression** text field, type `dl.U`.

4 Locate the **Coloring and Style** section. From the **Color table** list, choose **AuroraAustralis**.

5 Click to expand the **Range** section. Select the **Manual color range** checkbox.

6 In the **Maximum** text field, type `3e-3`.

Selection 1

1 Right-click **Surface 1** and choose **Selection**.

2 In the **Settings** window for **Selection**, locate the **Selection** section.

3 From the **Selection** list, choose **All Fractures**.

Volume 1

1 In the **Model Builder** window, right-click **Velocity** and choose **Volume**.

2 In the **Settings** window for **Volume**, locate the **Expression** section.

3 In the **Expression** text field, type `dl.U`.

4 Click to expand the **Inherit Style** section. From the **Plot** list, choose **Surface 1**.

Selection 1

1 Right-click **Volume 1** and choose **Selection**.

2 In the **Settings** window for **Selection**, locate the **Selection** section.

3 From the **Selection** list, choose **Bottom**.

Volume 2

In the **Model Builder** window, under **Results** > **Velocity** right-click **Volume 1** and choose **Duplicate**.

Selection 1

1 In the **Model Builder** window, expand the **Volume 2** node, then click **Selection 1**.

2 In the **Settings** window for **Selection**, locate the **Selection** section.

3 From the **Selection** list, choose **Top**.

Transparency 1

1 In the **Model Builder** window, right-click **Volume 2** and choose **Transparency**.

2 In the **Settings** window for **Transparency**, locate the **Transparency** section.

3 Find the **Transparency** subsection. In the **Transparency** text field, type `0.8`.

Velocity

In the **Model Builder** window, under **Results** click **Velocity**.

Streamline Surface 1

1 In the **Velocity** toolbar, click **More Plots** and choose **Streamline Surface**.

2 In the **Settings** window for **Streamline Surface**, locate the **Surface Selection** section.

3 From the **Selection** list, choose **All Fractures**.

4 Locate the **Streamline Positioning** section. From the **Positioning** list, choose **Magnitude controlled**.

5 Locate the **Coloring and Style** section. Find the **Point style** subsection. From the **Type** list, choose **Arrow**.

6 From the **Color** list, choose **White**.

7 In the **Velocity** toolbar, click **Plot**.