Model created in COMSOL Multiphysics 6.4

Cross Grating Échelle Spectrograph

This model is licensed under the COMSOL Software License Agreement 6.4.
All trademarks are the property of their respective owners. See www.comsol.com/trademarks.

Introduction

This tutorial demonstrates the use of a **Cross Grating** in an échelle spectrograph. A cross grating is a periodic surface with two directions of periodicity can be specified. In this model, the cross grating is used in high order in one direction, and in first order in the orthogonal ("cross") direction. By this means, a two-dimensional cross-dispersed spectrum can be produced with a single grating.

Another cross-dispersed spectrograph is the White Pupil Échelle Spectrograph. This model utilizes two separate échelle and cross-dispersion **Grating** features in order to create a two-dimensional spectral format.

Model Definition

An example of a cross grating spectrograph is described in Ref. 1. The optical layout used in this tutorial follows this example with some modifications.

The surface used to define the **Cross Grating** feature is shown in Figure 1. Like the **Grating** feature, the grating orientation may be specified in one of several ways. For this model, we choose to **Specific direction of periodicity**, with that direction set to **Parallel to reference edge**. In this figure, the grating surface normal is shown in blue, the direction of échelle dispersion is red, and the cross-dispersion direction is green.

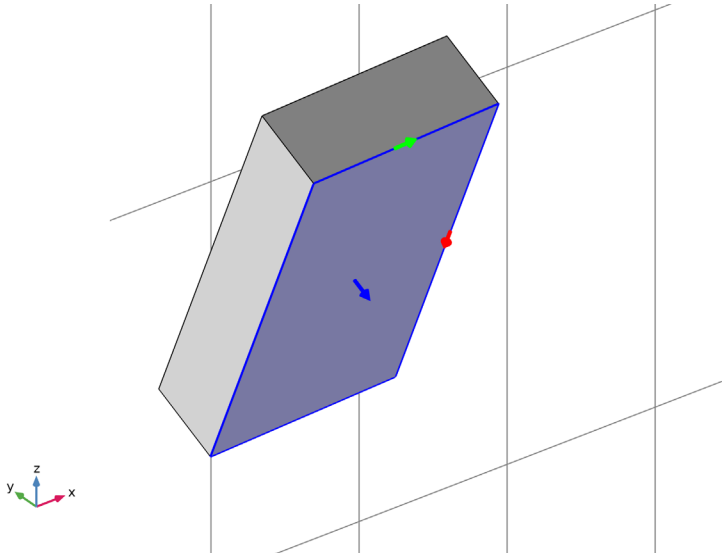

Figure 1: The Cross Grating showing the surface normal and directions of periodicity. The incident rays are traveling in the +z direction.

The geometry for the model, including the camera objective, can be inserted from a predefined sequence. Full instructions for creating the geometry sequence are given in Appendix — Geometry Instructions. An overview of the objective lens can be found in the Petzval Lens tutorial. The parameters used to create the sequence are listed in Table 1. Details of the collimating doublet lens used in this model are from Ref. 2.

TABLE 1: CROSS GRATING ECHELLE SPECTROGRAPH GEOMETRY PARAMETERS.

Parameter	Expression	Value	Description
Cross-dispersion definitions:			
λ_{mid}	—	525 nm	Middle wavelength
T_{ech}	—	500 /mm	Cross-dispersion line frequency
σ_{ech}	$1/T_{\mathrm{ech}}$	2 µm	Cross-dispersion line spacing
Échelle-dispersion definitions:			
θ_{B}	—	63.43°	Échelle blaze angle
$\Delta\theta$	—	1.5°	Échelle in-plane angle
γ	—	10.0°	Échelle out-of-plane angle
Collimating lens definitions:			
$R_{1,\mathrm{doub}}$	—	183.6850 mm	Radius of curvature, surface 1
$R_{2,\mathrm{doub}}$	—	43.2490 mm	Radius of curvature, surface 2
$R_{3,\mathrm{doub}}$	—	-64.1000 mm	Radius of curvature, surface 3
$Tc_{1,\mathrm{doub}}$	—	1.5 mm	Center thickness, element 1
$Tc_{2,\mathrm{doub}}$	—	3.5 mm	Center thickness, element 2
$d0_{\mathrm{doub}}$	—	22.5 mm	Lens diameter
BFL_{doub}	—	97.4495 mm	Back focal length

After insertion, the geometry sequence should look like Figure 2. Note that the geometry is fully parameterized. Therefore, a change in the cross grating properties will cause the geometry to be updated.

The mesh for this simulation is shown in Figure 3. Because this model does not include any other physics, an undeformed geometry can be used to trace rays. Therefore, only a small refinement of the default Physics-controlled mesh is necessary.

The remaining model parameters are listed in Table 2. Note that the λ_{nom} is a nominal wavelength only. It is used to define the order m in which this wavelength appears. That is, λ_{nom} is used to control the range of the **Parametric Sweep**. The expressions found in Table 2 give the blaze wavelength and free spectral ranges for any given order.

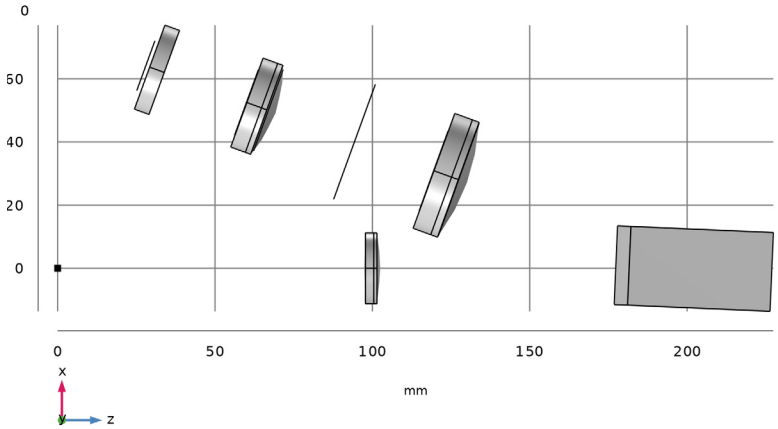

Figure 2: The cross grating échelle spectrograph geometry sequence.

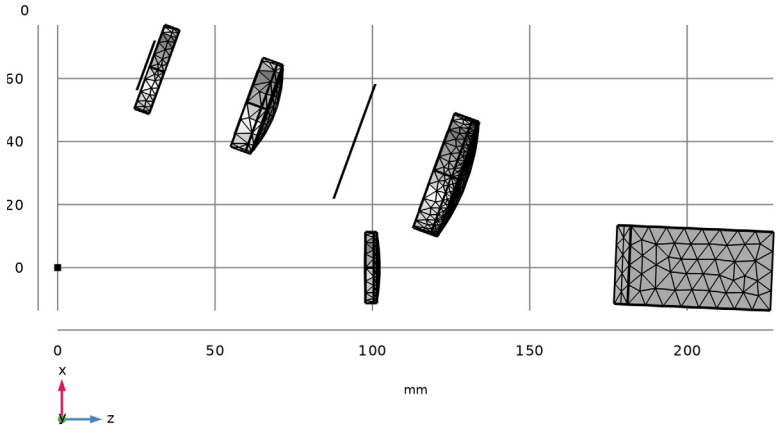

Figure 3: The cross grating échelle spectrograph mesh.

TABLE 2: CROSS GRATING ECHELLE SPECTROGRAPH MODEL PARAMETERS.

Parameter	Expression	Value	Description
Input definitions:			
λ_{nom}	—	525 nm	Nominal wavelength
N_{hex}	—	10	Number of hexapolar rings
N_{lam}	—	5	Number of wavelengths per order
f_{col}	—	100.0 mm	Collimator focal length
D	—	15.0 mm	Collimated beam diameter
F	f_{col}/D	6.67	Input focal ratio
NA	$0.5/F$	0.075	Input numerical aperture
Remaining échelle grating definitions:			
T_{ech}	—	50.0 1/mm	Échelle line frequency
σ_{ech}	$1/T_{\mathrm{ech}}$	20 µm	Échelle line spacing
Wavelength and order definitions:			
$m\lambda$	$2\sigma_{\mathrm{ech}}\cos\theta_{\mathrm{xdp}}\sin\theta_{\mathrm{B}}$	35466058 nm	Order number times wavelength
m	$\mathrm{round}(m\lambda/\lambda_{\mathrm{nom}})$	68	Échelle diffraction order
λ_{B}	$m\lambda/m$	521.560 nm	Actual échelle blaze wavelength
$\Delta\lambda_{\mathrm{FSR}}$	λ_{B}/m	7.670 nm	Échelle free spectral range
λ_{min}	$\lambda_{\mathrm{B}} - \Delta\lambda_{\mathrm{FSR}}/2$	517.725 nm	Min. wavelength (in order m)
λ_{max}	$\lambda_{\mathrm{B}} + \Delta\lambda_{\mathrm{FSR}}/2$	525.395 nm	Max. wavelength (in order m)
λ_{step}	$\frac{(\lambda_{\mathrm{max}} - \lambda_{\mathrm{min}})}{(N_{\mathrm{lam}} - 1)}$	1.917 nm	Wavelength step size

Results and Discussion

A **Parametric Sweep** over three orders spanning a nominal 100 nm has been made. A Release from Point is used to generate a conical distribution of rays uniformly covering the collimated beam diameter. Figure 4 shows a plan view of the resulting ray trace. A perspective view is seen in Figure 5.

The échelle diagram is seen in Figure 6. The wavelength range spans from 469.7 nm to 576.6 nm in orders m = 75 to 62.

The image quality at each wavelength can be seen in Figure 7. The color expression used in this plot is the release angle relative to the chief ray.

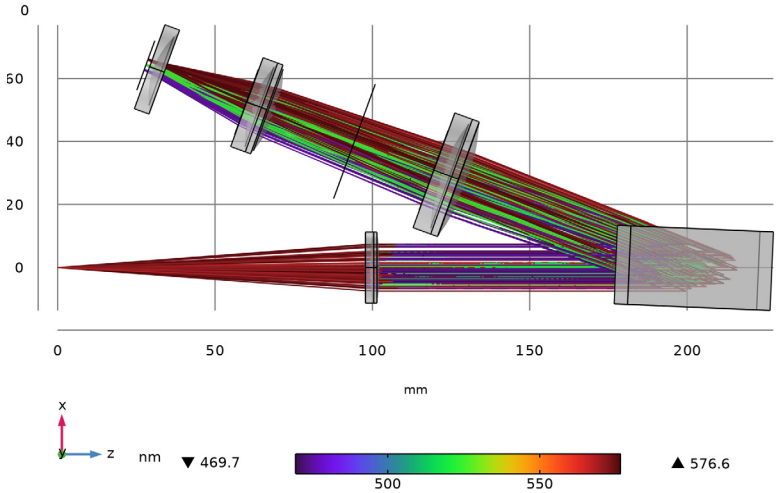

Figure 4: Ray trace through the cross grating échelle spectrograph. This plan view shows the direction of cross-dispersion.

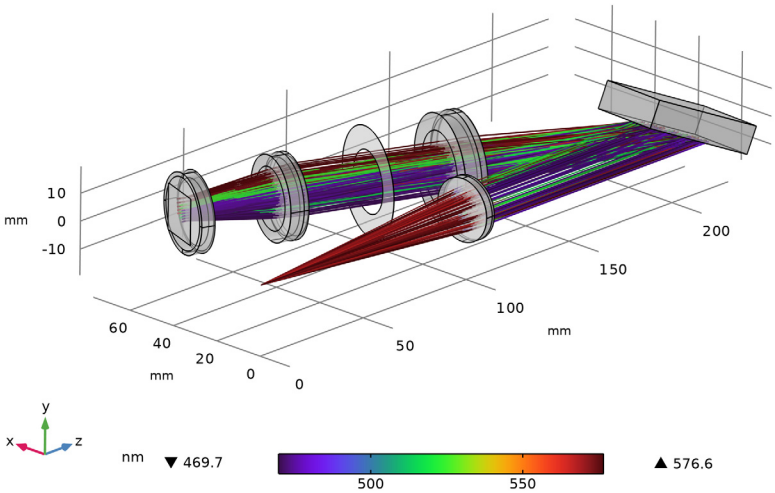

Figure 5: A perspective view of a ray trace through the cross grating échelle spectrograph.

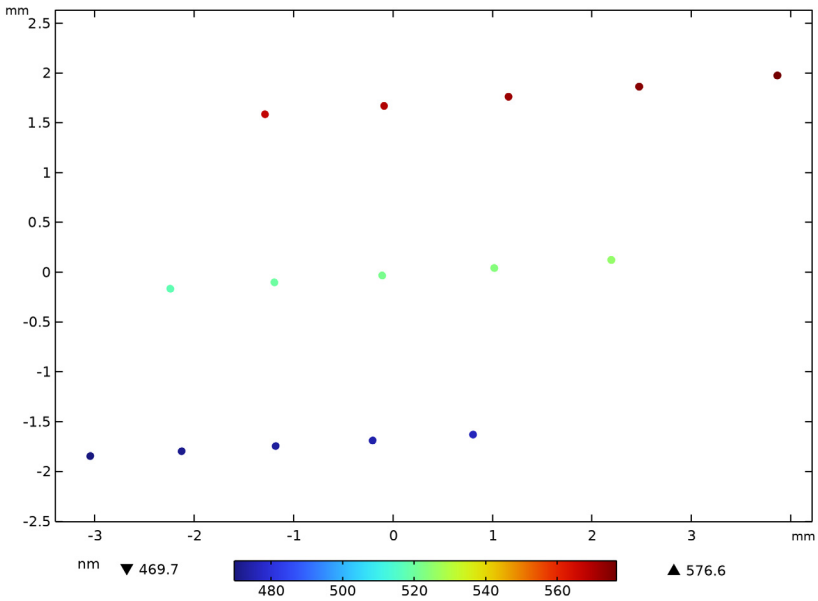

Figure 6: The cross grating échelle spectrograph échelle diagram.

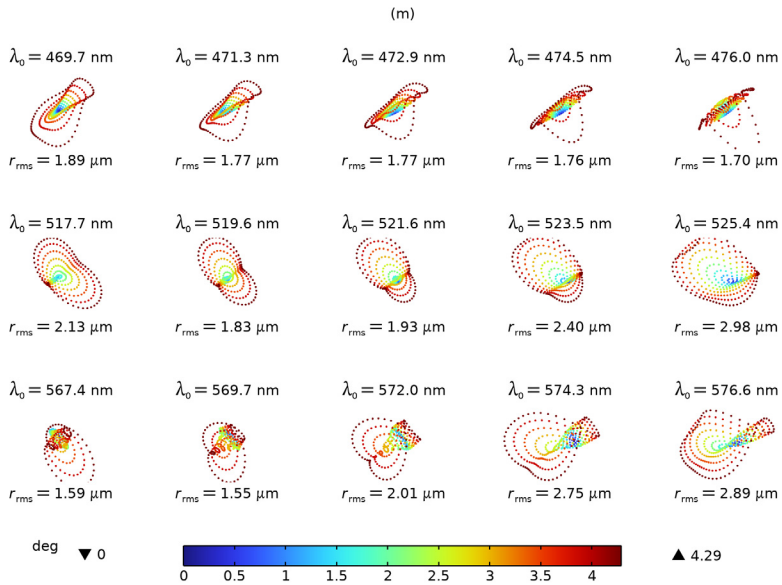

Figure 7: A spot diagram for the cross grating échelle spectrograph.

References

1. D. Thomae, T. Honle, M. Kraus, V. Bagusat, A. Deparnay, R. Bruning, and R. Brunner. "Compact echelle spectrometer employing a cross-grating," *Applied Optics*, vol. 57, no. 25, pp. 2109–7116, 2018.

2. M.J. Kidger, *Fundamental Optical Design*, Bellingham WA, USA: SPIE Press, 2001.

Application Library path: `Ray_Optics_Module/Spectrometers_and_Monochromators/cross_grating_echelle_spectrograph`

Modeling Instructions

From the **File** menu, choose **New**.

NEW

In the **New** window, click **Model Wizard**.

MODEL WIZARD

1 In the **Model Wizard** window, click **3D**.

2 In the **Select Physics** tree, select **Optics** > **Ray Optics** > **Geometrical Optics (gop)**.

3 Click **Add**.

4 Click **Study**.

5 In the **Select Study** tree, select **Preset Studies for Selected Physics Interfaces** > **Ray Tracing**.

6 Click **Done**.

GLOBAL DEFINITIONS

Parameters 1: Geometry

1 In the **Model Builder** window, under **Global Definitions** click **Parameters 1**.

2 In the **Settings** window for **Parameters**, type `Parameters 1: Geometry` in the **Label** text field. The geometry parameters will be added when the geometry sequence is inserted below.

Parameters 2: Model

1 In the **Home** toolbar, click **Parameters** and choose **Add** > **Parameters**.

2 In the **Settings** window for **Parameters**, type `Parameters 2: Model` in the **Label** text field.

3 Locate the **Parameters** section. Click **Load from File**.

4 Browse to the model's Application Libraries folder and double-click the file `cross_grating_echelle_spectrograph_parameters.txt`.

CROSS GRATING ÉCHELLE SPECTROGRAPH GEOMETRY SEQUENCE

Insert the prepared geometry sequence from file. You can read the instructions for creating the geometry in the appendix. Following insertion, the full geometry definition will be available in the **Parameters** node.

1 In the **Model Builder** window, under **Component 1 (comp1)** click **Geometry 1**.

2 In the **Settings** window for **Geometry**, type `Cross Grating Échelle Spectrograph Geometry Sequence` in the **Label** text field.

3 In the **Geometry** toolbar, click **Insert Sequence** and choose **Insert Sequence**.

4 Browse to the model's Application Libraries folder and double-click the file `cross_grating_echelle_spectrograph_geom_sequence.mph`.

5 In the **Geometry** toolbar, click **Build All**.

6 Click the **Orthographic Projection** button in the **Graphics** toolbar.

7 In the **Graphics** window toolbar, click ▾ next to **Go to Default View**, then choose **Go to ZX View**.

8 Click the **Zoom Extents** button in the **Graphics** toolbar. Orient the view to place the z-axis (optical axis) horizontal and the y-axis vertical. Compare the resulting geometry to Figure 2.

MATERIALS

Load the materials that are used in this model.

ADD MATERIAL

1 In the **Materials** toolbar, click **Add Material** to open the **Add Material** window.

2 Go to the **Add Material** window.

3 In the tree, select **Optical** > **Schott Glass** > **Schott N-BK7 Glass**.

4 Click the **Add to Component** button in the window toolbar.

5 In the tree, select **Optical** > **Schott Glass** > **Schott N-KZFS5 Glass**.

6 Click the **Add to Component** button in the window toolbar.

7 In the tree, select **Optical** > **Schott Glass** > **Schott N-SK2 Glass**.

8 Click the **Add to Component** button in the window toolbar.

9 In the tree, select **Optical** > **Schott Glass** > **Schott N-SF5 Glass**.

10 Click the **Add to Component** button in the window toolbar.

11 In the tree, select **Optical** > **CDGM Glass** > **CDGM H-ZF39 Glass**.

12 Click the **Add to Component** button in the window toolbar.

13 In the tree, select **Optical** > **Schott Glass** > **Schott N-SK11 Glass**.

14 Click the **Add to Component** button in the window toolbar.

15 In the **Materials** toolbar, click **Add Material** to close the **Add Material** window.

Now, assign these materials to the appropriate domains using the predefined selections.

MATERIALS

Schott N-BK7 Glass (mat1)

1 In the **Settings** window for **Material**, locate the **Geometric Entity Selection** section.

2 From the **Selection** list, choose **Lens Material 1**.

Schott N-KZFS5 Glass (mat2)

1 In the **Model Builder** window, click **Schott N-KZFS5 Glass (mat2)**.

2 In the **Settings** window for **Material**, locate the **Geometric Entity Selection** section.

3 From the **Selection** list, choose **Lens Material 2**.

Schott N-SK2 Glass (mat3)

1 In the **Model Builder** window, click **Schott N-SK2 Glass (mat3)**.

2 In the **Settings** window for **Material**, locate the **Geometric Entity Selection** section.

3 From the **Selection** list, choose **Lens Material 3**.

Schott N-SF5 Glass (mat4)

1 In the **Model Builder** window, click **Schott N-SF5 Glass (mat4)**.

2 In the **Settings** window for **Material**, locate the **Geometric Entity Selection** section.

3 From the **Selection** list, choose **Lens Material 4**.

CDGM H-ZF39 Glass (mat5)

1 In the **Model Builder** window, click **CDGM H-ZF39 Glass (mat5)**.

2 In the **Settings** window for **Material**, locate the **Geometric Entity Selection** section.

3 From the **Selection** list, choose **Element 1 (Collimator Lens)**.

Schott N-SK11 Glass (mat6)

1 In the **Model Builder** window, click **Schott N-SK11 Glass (mat6)**.

2 In the **Settings** window for **Material**, locate the **Geometric Entity Selection** section.

3 From the **Selection** list, choose **Element 2 (Collimator Lens)**.

GEOMETRICAL OPTICS (GOP)

1 In the **Model Builder** window, under **Component 1 (comp1)** click **Geometrical Optics (gop)**.

2 In the **Settings** window for **Geometrical Optics**, locate the **Ray Release and Propagation** section.

3 From the **Wavelength distribution of released rays** list, choose **Polychromatic, specify vacuum wavelength**.

4 In the **Maximum number of secondary rays** text field, type 0.

5 Locate the **Material Properties of Exterior and Unmeshed Domains** section. From the **Optical dispersion model** list, choose **Air, Edlen (1953)**. The collimator lens and camera objective have been optimized for use in air.

6 Locate the **Additional Variables** section. Select the **Compute optical path length** checkbox. The optical path length will be used to distinguish rays on the image plane from other rays which also intersect the same plane.

Medium Properties 1

1 In the **Model Builder** window, under **Component 1 (comp1)** > **Geometrical Optics (gop)** click **Medium Properties 1**.

2 In the **Settings** window for **Medium Properties**, locate the **Medium Properties** section.

3 From the **Refractive index of domains** list, choose **Get dispersion model from material**. The materials previously loaded contain the coefficients for the optical dispersions models that are used to compute the wavelength dependent refractive indices.

Material Discontinuity 1

1 In the **Model Builder** window, click **Material Discontinuity 1**.

2 In the **Settings** window for **Material Discontinuity**, locate the **Rays to Release** section.

3 From the **Release reflected rays** list, choose **Never**. Scattered light is not considered in this model.

Cross Grating 1

1 In the **Physics** toolbar, click **Boundaries** and choose **Cross Grating**.

2 In the **Settings** window for **Cross Grating**, locate the **Boundary Selection** section.

3 From the **Selection** list, choose **Cross Grating Surface**.

4 Locate the **Device Properties** section. From the **Rays to release** list, choose **Reflected**.

5 In the d_1 text field, type `sigma_ech`.

6 In the d_2 text field, type `sigma_xdp`.

7 Locate the **Grating Orientation 1** section. From the **Direction of periodicity 1** list, choose **Parallel to reference edge**.

8 Locate the **Reference Edge Selection, Direction 1** section. Click to select the **Activate Selection** toggle button.

9 Select Edge 39 only.

10 Locate the **Grating Orientation 2** section. From the **Direction of periodicity 2** list, choose **Parallel to reference edge**.

11 Locate the **Reference Edge Selection, Direction 2** section. Click to select the **Activate Selection** toggle button.

12 Select Edge 5 only. The two directions of periodicity and the surface normal are indicated by the red, green, and blue arrows respectively. See below:

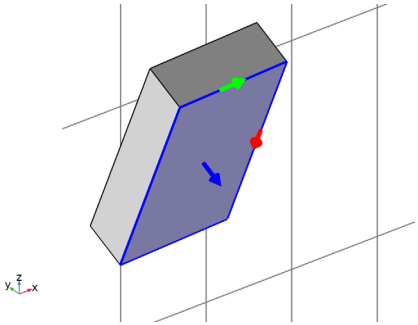

Diffraction Order (m = 0, n = 0)

1 In the **Model Builder** window, expand the **Cross Grating 1** node, then click **Diffraction Order (m = 0, n = 0)**.

2 In the **Settings** window for **Diffraction Order**, locate the **Device Properties** section.

3 In the m text field, type `m`. The echelle order number is computed in the **Parameters 2: Model** node using the nominal wavelength `lam_nom`.

4 In the n text field, type `1`. The cross-dispersion will be in the first order.

Obstructions

1 In the **Physics** toolbar, click **Boundaries** and choose **Wall**.

2 In the **Settings** window for **Wall**, type `Obstructions` in the **Label** text field.

3 Locate the **Boundary Selection** section. From the **Selection** list, choose **Obstructions**.

4 Locate the **Wall Condition** section. From the **Wall condition** list, choose **Disappear**. Note that in this model, the internal aperture stop of the Petzval lens will be ignored.

Image Plane

1 In the **Physics** toolbar, click **Boundaries** and choose **Wall**.

2 In the **Settings** window for **Wall**, type `Image Plane` in the **Label** text field.

3 Locate the **Boundary Selection** section. From the **Selection** list, choose **Image Plane**. The default Wall condition **Freeze** will be applied to rays that intersect the image surface.

Release from Point 1

1 In the **Physics** toolbar, click **Points** and choose **Release from Point**.

2 In the **Settings** window for **Release from Point**, locate the **Point Selection** section.

3 From the **Selection** list, choose **Entrance slit (point)**.

4 Locate the **Ray Direction Vector** section. From the **Ray direction vector** list, choose **Conical**.

5 From the **Conical distribution** list, choose **Hexapolar**.

6 In the N_θ text field, type `N_hex`. The number of hexapolar angles was defined in the **Parameters 2: Model** node.

7 Specify the **r** vector as

0	x
0	y
1	z

8 In the α text field, type `atan(NA)`.

9 Locate the **Vacuum Wavelength** section. From the **Distribution function** list, choose **List of values**.

10 In the **Values** text field, type `range(lam_min,lam_step,lam_max)`. These wavelengths span one free spectral range centered on the blaze wavelength. The values are also defined in the **Parameters** node.

DEFINITIONS

In the following steps **Nonlocal Couplings** are used to allow the three corners of the image surface to be used to define an **Intersection Point 3D** dataset.

Average 1 (aveop1)

1 In the **Definitions** toolbar, click **Nonlocal Couplings** and choose **Average**.

2 In the **Settings** window for **Average**, locate the **Source Selection** section.

3 From the **Geometric entity level** list, choose **Point**.

4 Select Point 76 only.

Average 2 (aveop2)

1 In the **Definitions** toolbar, click **Nonlocal Couplings** and choose **Average**.

2 In the **Settings** window for **Average**, locate the **Source Selection** section.

3 From the **Geometric entity level** list, choose **Point**.

4 Select Point 77 only.

Average 3 (aveop3)

1 In the **Definitions** toolbar, click **Nonlocal Couplings** and choose **Average**.

2 In the **Settings** window for **Average**, locate the **Source Selection** section.

3 From the **Geometric entity level** list, choose **Point**.

4 Select Point 96 only.

MESH 1

1 In the **Model Builder** window, under **Component 1 (comp1)** click **Mesh 1**.

2 In the **Settings** window for **Mesh**, locate the **Physics-Controlled Mesh** section.

3 From the **Element size** list, choose **Coarser**.

4 Click **Build All**. The mesh should appear like Figure 3.

STUDY 1

Step 1: Ray Tracing

1 In the **Model Builder** window, under **Study 1** click **Step 1: Ray Tracing**.

2 In the **Settings** window for **Ray Tracing**, locate the **Study Settings** section.

3 From the **Time-step specification** list, choose **Specify maximum path length**.

4 From the **Length unit** list, choose **mm**.

5 In the **Lengths** text field, type `0 450`. This path length is sufficient to ensure that all rays make it to the image plane.

Add a parametric sweep to trace rays in several orders.

Parametric Sweep

1 In the **Study** toolbar, click **Parametric Sweep**.

2 In the **Settings** window for **Parametric Sweep**, locate the **Study Settings** section.

3 Click **Add**.

4 In the table, enter the following settings:

Parameter name	Parameter value list	Parameter unit
lam_nom (Nominal wavelength)	`lam_mid-50[nm] lam_mid lam_mid+50[nm]`	`nm`

5 In the **Study** toolbar, click **Compute**.

RESULTS

Ray Diagram

Use the default Ray Trajectories plot as a starting point for a Ray Diagram.

1 In the **Settings** window for **3D Plot Group**, type `Ray Diagram` in the **Label** text field.

2 Click to expand the **Title** section. From the **Title type** list, choose **None**.

3 Locate the **Color Legend** section. Select the **Show maximum and minimum values** checkbox.

4 Select the **Show units** checkbox.

5 From the **Position** list, choose **Bottom**.

6 Click to expand the **Number Format** section. Select the **Manual color legend settings** checkbox.

7 In the **Precision** text field, type `4`.

Ray Trajectories 1

1 In the **Model Builder** window, expand the **Ray Diagram** node, then click **Ray Trajectories 1**.

2 In the **Settings** window for **Ray Trajectories**, locate the **Data** section.

3 From the **Dataset** list, choose **Ray 1**.

4 From the **Parameter value (lam_nom (nm))** list, choose **475**.

Color Expression 1

1 In the **Model Builder** window, expand the **Ray Trajectories 1** node, then click **Color Expression 1**.

2 In the **Settings** window for **Color Expression**, locate the **Expression** section.

3 In the **Expression** text field, type `gop.lambda0`.

4 From the **Unit** list, choose **nm**.

5 Locate the **Coloring and Style** section. From the **Color table** list, choose **Spectrum**.

Filter 1

1 In the **Model Builder** window, click **Filter 1**.

2 In the **Settings** window for **Filter**, locate the **Ray Selection** section.

3 From the **Rays to render** list, choose **Fraction**.

4 In the **Fraction of rays** text field, type `.05`. Show only 5% of the rays to improve the rendering.

Ray Trajectories 2

1 In the **Model Builder** window, under **Results** > **Ray Diagram** right-click **Ray Trajectories 1** and choose **Duplicate**.

2 In the **Settings** window for **Ray Trajectories**, locate the **Data** section.

3 From the **Parameter value (lam_nom (nm))** list, choose **525**.

4 Click to expand the **Inherit Style** section. From the **Plot** list, choose **Ray Trajectories 1**.

Ray Trajectories 3

1 Right-click **Ray Trajectories 2** and choose **Duplicate**.

2 In the **Settings** window for **Ray Trajectories**, locate the **Data** section.

3 From the **Parameter value (lam_nom (nm))** list, choose **575**.

Surface 1

1 In the **Model Builder** window, right-click **Ray Diagram** and choose **Surface**.

2 In the **Settings** window for **Surface**, locate the **Coloring and Style** section.

3 From the **Coloring** list, choose **Uniform**.

4 From the **Color** list, choose **Gray**.

Transparency 1

1 Right-click **Surface 1** and choose **Transparency**.

2 In the **Ray Diagram** toolbar, click **Plot**.

3 Click the **Zoom Extents** button in the **Graphics** toolbar. Compare the resulting image to Figure 4. Orient the view to match Figure 5 to show the all the rays.

Intersection Point 3D 1

1 In the **Results** toolbar, click **More Datasets** and choose **Intersection Point 3D**. In the following steps, use the **Nonlocal Couplings** defined above to create a dataset that intersects the image plane.

2 In the **Settings** window for **Intersection Point 3D**, locate the **Surface** section.

3 From the **Plane entry method** list, choose **Three points**.

4 In row **Point 1**, set **x** to `aveop1(x)`.

5 In row **Point 1**, set **y** to `aveop1(y)`.

6 In row **Point 1**, set **z** to `aveop1(z)`.

7 In row **Point 2**, set **x** to `aveop2(x)`.

8 In row **Point 2**, set **y** to `aveop2(y)`.

9 In row **Point 2**, set **z** to `aveop2(z)`.

10 In row **Point 3**, set **x** to `aveop3(x)`.

11 In row **Point 3**, set **y** to `aveop3(y)`.

12 In row **Point 3**, set **z** to `aveop3(z)`.

The **Intersection Point 3D** dataset can be used together with the **Spot Diagram** plot to create two plots. The first, an Échelle diagram, shows the absolute location of all rays in the image surface. The second, shows the monochromatic spots.

Échelle Diagram

1 In the **Results** toolbar, click **2D Plot Group**.

2 In the **Settings** window for **2D Plot Group**, type `Échelle Diagram` in the **Label** text field.

3 Locate the **Data** section. From the **Dataset** list, choose **None**.

4 Click to expand the **Title** section. From the **Title type** list, choose **None**.

5 Locate the **Color Legend** section. Select the **Show maximum and minimum values** checkbox.

6 Select the **Show units** checkbox.

7 From the **Position** list, choose **Bottom**.

8 Click to expand the **Number Format** section. Select the **Manual color legend settings** checkbox.

9 In the **Precision** text field, type `4`.

Spot Diagram 1

1 In the **Échelle Diagram** toolbar, click **More Plots** and choose **Spot Diagram**.

2 In the **Settings** window for **Spot Diagram**, locate the **Data** section.

3 From the **Image surface** list, choose **Intersection Point 3D 1**.

4 Locate the **Filters** section.

5 Select the **Filter by additional logical expression** checkbox. In the associated text field, type `comp1.gop.L>100[mm]`. Because the plane intersecting the image surface also

passes through ray trajectories before they reach the image plane, these ray intersections must be removed from the plot.

6 Locate the **Layout** section. From the **Spot arrangement** list, choose **Single plot**.

7 Click to expand the **Annotations** section. Clear the **Show spot size** checkbox.

8 Locate the **Coloring and Style** section. Select the **Radius scale factor** checkbox.

Color Expression 1

1 Right-click **Spot Diagram 1** and choose **Color Expression**.

2 In the **Settings** window for **Color Expression**, locate the **Expression** section.

3 In the **Expression** text field, type `gop.lambda0`.

4 From the **Unit** list, choose **nm**.

5 In the **Échelle Diagram** toolbar, click **Plot**.

6 Click the **Zoom Extents** button in the **Graphics** toolbar. Compare this figure to Figure 6.

In the following steps a standard spot diagram will be created.

Spot Diagram

1 In the **Results** toolbar, click **2D Plot Group**.

2 In the **Settings** window for **2D Plot Group**, type `Spot Diagram` in the **Label** text field.

3 Locate the **Data** section. From the **Dataset** list, choose **None**.

4 Locate the **Color Legend** section. Select the **Show maximum and minimum values** checkbox.

5 Select the **Show units** checkbox.

6 From the **Position** list, choose **Bottom**.

Spot Diagram 1

1 In the **Spot Diagram** toolbar, click **More Plots** and choose **Spot Diagram**.

2 In the **Settings** window for **Spot Diagram**, locate the **Data** section.

3 From the **Image surface** list, choose **Intersection Point 3D 1**.

4 Locate the **Filters** section.

5 Select the **Filter by additional logical expression** checkbox. In the associated text field, type `comp1.gop.L>100[mm]`.

6 Locate the **Layout** section. From the **Spot arrangement** list, choose **Sort by wavelength**.

7 From the **Layout** list, choose **Rectangular grid**.

8 In the **Number of columns** text field, type `5`.

9 Locate the **Annotations** section. Select the **Show wavelength** checkbox.

Color Expression 1

1 Right-click **Spot Diagram 1** and choose **Color Expression**.

2 In the **Settings** window for **Color Expression**, locate the **Expression** section.

3 In the **Expression** text field, type `at(0,gop.phic)`. This is the angle from the cone axis at the entrance slit.

4 In the **Unit** field, type `deg`.

5 In the **Spot Diagram** toolbar, click **Plot**.

6 Click the **Show Grid** button in the **Graphics** toolbar.

7 Click the **Zoom Extents** button in the **Graphics** toolbar. Compare this figure to Figure 7.

From the **File** menu, choose **New**.

NEW

In the **New** window, click **Model Wizard**.

MODEL WIZARD

1 In the **Model Wizard** window, click **3D**.

2 Click **Done**.

GLOBAL DEFINITIONS

Parameters 1

1 In the **Model Builder** window, under **Global Definitions** click **Parameters 1**.

2 In the **Settings** window for **Parameters**, locate the **Parameters** section.

3 Click **Load from File**.

4 Browse to the model's Application Libraries folder and double-click the file `cross_grating_echelle_spectrograph_geom_sequence_parameters.txt`.

GEOMETRY 1

1 In the **Model Builder** window, under **Component 1 (comp1)** click **Geometry 1**.

2 In the **Settings** window for **Geometry**, locate the **Units** section.

3 From the **Length unit** list, choose **mm**.

Entrance slit (point)

1 In the **Geometry** toolbar, click **More Primitives** and choose **Point**.

2 In the **Settings** window for **Point**, type `Entrance slit (point)` in the **Label** text field.

3 Locate the **Selections of Resulting Entities** section. Select the **Resulting objects selection** checkbox.

PART LIBRARIES

1 In the **Geometry** toolbar, click **Part Libraries**.

2 In the **Model Builder** window, click **Geometry 1**.

3 In the **Part Libraries** window, select **Ray Optics Module** > **3D** > **Doublet and Triplet Lenses** > **spherical_doublet_lens_3d** in the tree.

4 Click **Add to Geometry**.

5 In the **Select Part Variant** dialog, select **Contact doublet, specify clear aperture diameter** in the **Select part variant** list.

6 Click **OK**.

GEOMETRY 1

Collimator Lens

The doublet lens used in this model is a Fraunhofer doublet from Ref. 2, pg 172. The parameters were defined in the **Parameters** node.

1 In the **Model Builder** window, under **Component 1 (comp1)** > **Geometry 1** click **Spherical Doublet Lens 3D 1 (pi1)**.

2 In the **Settings** window for **Part Instance**, type `Collimator Lens` in the **Label** text field.

3 Locate the **Input Parameters** section. In the table, enter the following settings:

Name	Expression	Value	Description
R1	R1_doub	183.69 mm	Radius of curvature, surface 1 (+ convex/-concave)
R2	R2_doub	43.249 mm	Radius of curvature, surface 2
R3	R3_doub	-64.1 mm	Radius of curvature, surface 3 (- convex/+concave)
Tc1	Tc1_doub	1.5 mm	Center thickness, element 1
Tc2	Tc2_doub	3.5 mm	Center thickness, element 2
d0_1	d0_doub	22.5 mm	Diameter, element 1
d0_2	d0_doub	22.5 mm	Diameter, element 2
d1	0	0	Diameter, surface 1
d2	0	0	Diameter, surface 2
d3	0	0	Diameter, surface 3
d1_clear	0	0 m	Clear aperture diameter, surface 1
d2_clear	0	0 m	Clear aperture diameter, surface 2
d3_clear	0	0 m	Clear aperture diameter, surface 3

4 Locate the **Position and Orientation of Output** section. Find the **Displacement** subsection. In the **zwi** text field, type `BFL_doub`.

5 Click to expand the **Domain Selections** section. In the table, select the **Keep** checkboxes for **Element 1** and **Element 2**.

In the following steps, the orientation of the cross grating is defined using a series of **Work Planes**.

Cross Grating Incoming Reference

1 In the **Geometry** toolbar, click **Work Plane**.

2 In the **Settings** window for **Work Plane**, type `Cross Grating Incoming Reference` in the **Label** text field.

3 Locate the **Plane Definition** section. From the **Plane type** list, choose **Normal vector**.

4 Find the **Normal vector** subsection. In the **y** text field, type `1`.

5 In the **z** text field, type `0`.

6 Find the **Point on plane** subsection. In the **z** text field, type `200`.

Cross Grating Facet Tangent

1 In the **Geometry** toolbar, click **Work Plane**.

2 In the **Settings** window for **Work Plane**, type `Cross Grating Facet Tangent` in the **Label** text field.

3 Locate the **Plane Definition** section. From the **Plane type** list, choose **Transformed**.

4 From the **Work plane to transform** list, choose **Cross Grating Incoming Reference (wp1)**.

5 Find the **Rotation** subsection. In the **Rotation angle** text field, type `theta_xdp-gamma`.

Cross Grating Facet Normal

1 In the **Geometry** toolbar, click **Work Plane**.

2 In the **Settings** window for **Work Plane**, type `Cross Grating Facet Normal` in the **Label** text field.

3 Locate the **Plane Definition** section. From the **Plane type** list, choose **Transformed**.

4 From the **Work plane to transform** list, choose **Cross Grating Facet Tangent (wp2)**.

5 Find the **Rotation** subsection. From the **Axis type** list, choose **ywi-axis**.

6 In the **Rotation angle** text field, type `90`.

Cross Grating Surface

1 In the **Geometry** toolbar, click **Work Plane**.

2 In the **Settings** window for **Work Plane**, type `Cross Grating Surface` in the **Label** text field.

3 Locate the **Plane Definition** section. From the **Plane type** list, choose **Transformed**.

4 From the **Work plane to transform** list, choose **Cross Grating Facet Normal (wp3)**.

5 Find the **Rotation** subsection. From the **Axis type** list, choose **ywi-axis**.

6 In the **Rotation angle** text field, type `theta_B+dtheta`.

7 Locate the **Selections of Resulting Entities** section. Select the **Resulting objects selection** checkbox. The grating surface will be defined on this work plane.

Cross Grating Surface (wp4) > Plane Geometry

In the **Model Builder** window, click **Plane Geometry**.

Cross Grating Surface (wp4) > Rectangle 1 (r1)

1 In the **Work Plane** toolbar, click **Rectangle**.

2 In the **Settings** window for **Rectangle**, locate the **Size and Shape** section.

3 In the **Width** text field, type `50.0`.

4 In the **Height** text field, type `25.0`.

5 Locate the **Position** section. From the **Base** list, choose **Center**.

Cross Grating

1 In the **Model Builder** window, right-click **Geometry 1** and choose **Extrude**.

2 In the **Settings** window for **Extrude**, type `Cross Grating` in the **Label** text field.

3 Locate the **Distances** section. In the table, enter the following settings:

Distances (mm)
10

4 Select the **Reverse direction** checkbox.

Cross Grating Outgoing Reference

1 In the **Geometry** toolbar, click **Work Plane**.

2 In the **Settings** window for **Work Plane**, type `Cross Grating Outgoing Reference` in the **Label** text field.

3 Locate the **Plane Definition** section. From the **Plane type** list, choose **Transformed**.

4 From the **Work plane to transform** list, choose **Cross Grating Facet Normal (wp3)**.

5 Find the **Rotation** subsection. From the **Axis type** list, choose **xwi-axis**.

6 In the **Rotation angle** text field, type `theta_xdp+gamma`.

Petzval Lens Geometry Sequence

The objective lens used in the spectrograph can be inserted from file using a prepared geometry sequence. For detailed instructions on creating this geometry see the appendix of the **Petzval Lens** tutorial.

1 In the **Geometry** toolbar, click **Insert Sequence** and choose **Insert Sequence**.

2 Browse to the model's Application Libraries folder and double-click the file `cross_grating_echelle_spectrograph_petzval_lens_geom_sequence.mph`.

Now, position the lens in the spectrograph geometry using the predefined work planes.

Lens 1 (pi2)

1 In the **Model Builder** window, click **Lens 1 (pi2)**.

2 In the **Settings** window for **Part Instance**, locate the **Position and Orientation of Output** section.

3 Find the **Coordinate system to match** subsection. From the **Work plane** list, choose **Cross Grating Outgoing Reference (wp5)**.

4 Find the **Displacement** subsection. In the **ywi** text field, type `-1.5[mm]`.

5 In the **zwi** text field, type `75.0[mm]`.

Group 1 Aperture (pi9), Group 2 Aperture (pi10), Group 3 Aperture (pi11)

1 In the **Model Builder** window, under **Component 1 (comp1)** > **Geometry 1**, Ctrl-click to select **Group 1 Aperture (pi9)**, **Group 2 Aperture (pi10)**, and **Group 3 Aperture (pi11)**.

2 Right-click and choose **Disable**. These apertures are not needed in this model.

Scale 1 (sca1)

1 In the **Geometry** toolbar, click **Transforms** and choose **Scale**.

2 Select the objects **pi2**, **pi3**, **pi4**, **pi5**, **pi6**, **pi7**, and **pi8** only.

3 In the **Settings** window for **Scale**, locate the **Scale Factor** section.

4 In the **Factor** text field, type `0.667`. The focal length of the Petzval lens is reduced to 66.7 mm.

5 Locate the **Coordinate System** section. From the **Take work plane from** list, choose **Lens 1 (pi2)**.

6 From the **Work plane** list, choose **Surface 1 vertex intersection (wp1)**.

Cross Grating (ext1)

1 In the **Model Builder** window, click **Cross Grating (ext1)**.

2 In the **Settings** window for **Extrude**, locate the **Selections of Resulting Entities** section.

3 Find the **Cumulative selection** subsection. From the **Contribute to** list, choose **Lens Material 1**.

GLOBAL DEFINITIONS

Parameters 1

1 In the **Model Builder** window, under **Global Definitions** click **Parameters 1**.

2 In the **Settings** window for **Parameters**, locate the **Parameters** section.

3 In the table, enter the following settings:

Name	Expression	Value	Description
d0_D	25.0[mm]	0.025 m	Detector diameter

4 Right-click **Global Definitions** > **Parameters 1** and choose **Build All Objects**.

5 Click the **Orthographic Projection** button in the **Graphics** toolbar.

6 In the **Graphics** window toolbar, click ▼ next to **Go to Default View**, then choose **Go to ZX View**.

7 Click the **Zoom Extents** button in the **Graphics** toolbar. Compare the resulting image to Figure 2.