Model created in COMSOL Multiphysics 6.4

Anode Film Resistance Effect on Cathodic Corrosion Protection

This model is licensed under the COMSOL Software License Agreement 6.4.
All trademarks are the property of their respective owners. See www.comsol.com/trademarks.

Introduction

This example is an extension of the Corrosion Protection of an Oil Platform Using Sacrificial Anodes model. The model exemplifies how the steel corrosion rate increases over time due to build-up of a resistive film on the sacrificial anodes, formed by reaction products.

Model Definition

The zinc dissolved on a sacrificial anode may react further to form various compounds. One example is $Zn(OH)_2$ formation according to

$$\begin{gathered} Zn \Leftrightarrow Zn^{2+} + 2e^{-} \\ Zn^{2+} + 2H_2O \Leftrightarrow Zn(OH)_2 + 2H^{+} \end{gathered} \tag{1}$$

In marine saline environments, however, other products may also be formed, for instance chloride and hydroxychloride compounds. This is not included in the model.

In this example we assume that 1% of the zinc ions dissolved precipitate as a dense film on the zinc anode surface, resulting in a growing film resistance over time.

Constant molar mass, density and conductivity are assumed for the species forming the resistive film. In reality, these properties may change over time due to a changing porosity of the depositing film.

The model also includes secondary current distribution electrode kinetics on the protected steel structure, defining simultaneous metal dissolution and oxygen reduction (mixed potential), in analogy with for instance the Galvanized Nail and the Cathodic Protection of Steel in Reinforced Concrete examples.

The model is solved in a one year time-dependent simulation. The symmetry of the model geometry has been considered in order to reduce the problem size, as shown in Figure 1.

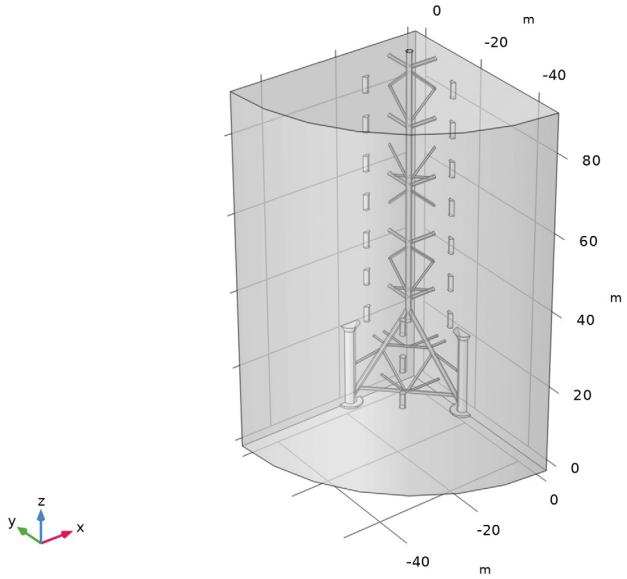

Figure 1: Model geometry. Symmetry was considered to reduce the model size.

Results and Discussion

Figure 2 and Figure 3 show the electrode potential vs SHE at the start of the simulation and after one year, respectively. The potential on the steel structure is higher at the end of the simulation, resulting in a reduced corrosion protection.

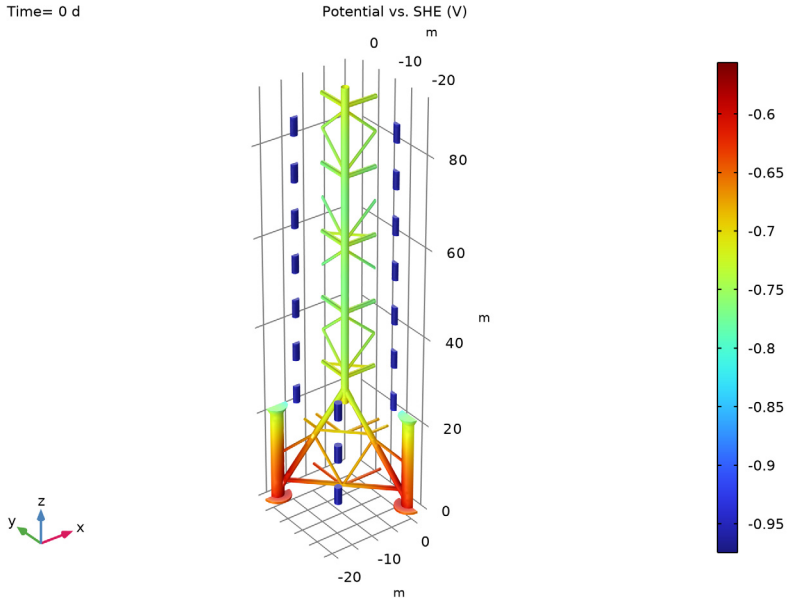

Figure 2: Potential vs SHE at t=0.

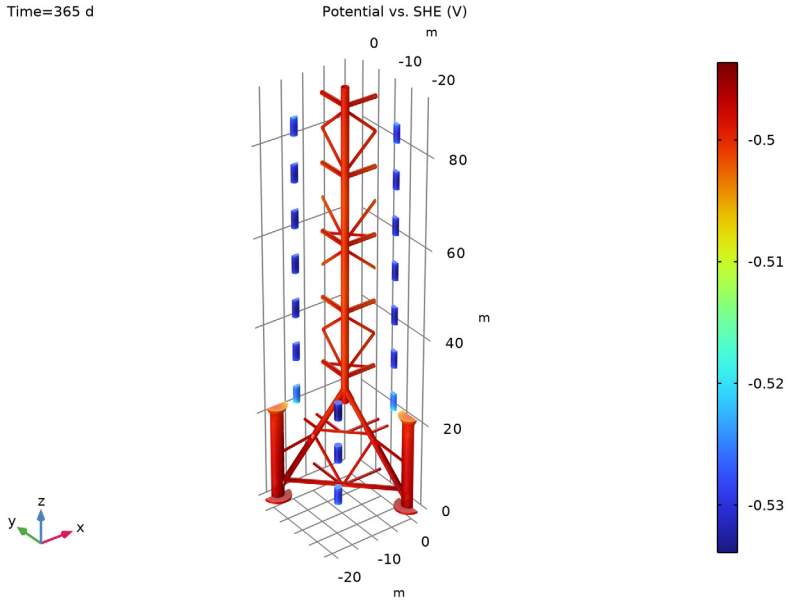

Figure 3: Potential vs SHE at t=365 days.

Figure 4 shows the resulting anode film thickness after one year. The film thickness is fairly uniform.

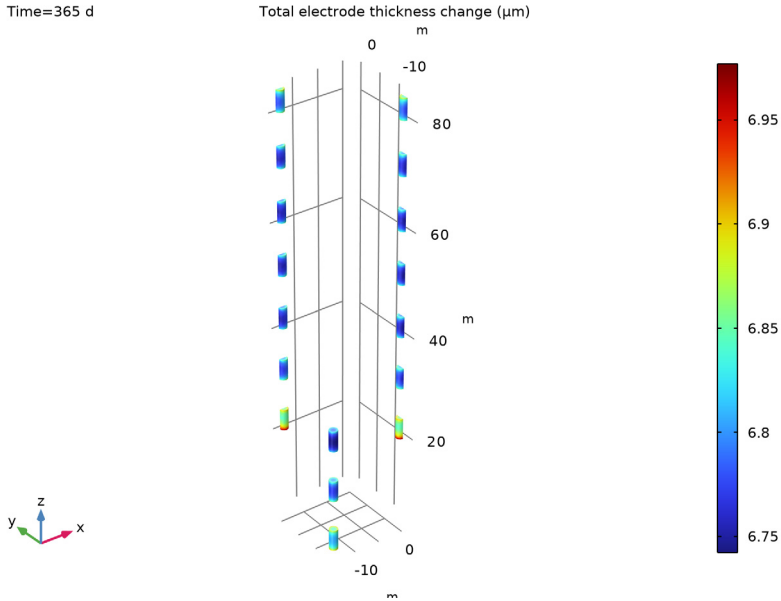

Figure 4: Precipitated anode film thickness at t=365 days.

Figure 5 shows the steel corrosion current density for two points: one at the upper part of one of the legs, and one at the inner bottom part of one of the legs. As can be seen the corrosion rates increase significantly over time and approach the limiting current density for oxygen (0.1 A/m^2) used in the model.

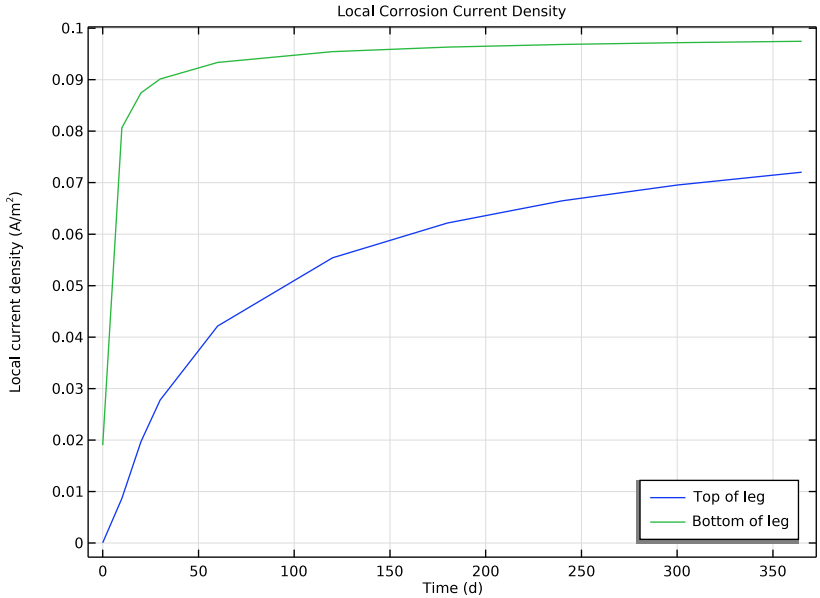

Figure 5: Corrosion current density vs time.

Notes About the COMSOL Implementation

An Electrode Surface boundary node is used for the zinc anodes in order to define the surface concentration of precipitated products, the film resistance potential drop, and the zinc oxidation reaction.

Application Library path: `Corrosion_Module/Cathodic_Protection/anode_film_resistance`

Modeling Instructions

From the **File** menu, choose **New**.

NEW

In the **New** window, click **Model Wizard**.

MODEL WIZARD

1 In the **Model Wizard** window, click **3D**.

2 In the **Select Physics** tree, select **Electrochemistry** > **Primary and Secondary Current Distribution** > **Secondary Current Distribution (cd)**.

3 Click **Add**.

4 Click **Study**.

5 In the **Select Study** tree, select **Preset Studies for Selected Physics Interfaces** > **Time Dependent with Initialization**.

6 Click **Done**.

GLOBAL DEFINITIONS

Parameters 1

1 In the **Model Builder** window, under **Global Definitions** click **Parameters 1**.

2 In the **Settings** window for **Parameters**, locate the **Parameters** section.

3 Click **Load from File**.

4 Browse to the model's Application Libraries folder and double-click the file `anode_film_resistance_parameters.txt`.

GEOMETRY 1

The model geometry is available as a parameterized geometry sequence in a separate MPH file. If you want to build it from scratch, follow the instructions in the section Appendix — Geometry Modeling Instructions. Otherwise load it from file with the following steps.

1 In the **Model Builder** window, expand the **Component 1 (comp1)** > **Geometry 1** node.

2 Right-click **Geometry 1** and choose **Insert Sequence**.

3 Browse to the model's Application Libraries folder and double-click the file `anode_film_resistance_geom_sequence.mph`.

4 In the **Geometry** toolbar, click **Build All**.

5 Click the **Zoom Extents** button in the **Graphics** toolbar.

6 Click the **Transparency** button in the **Graphics** toolbar.

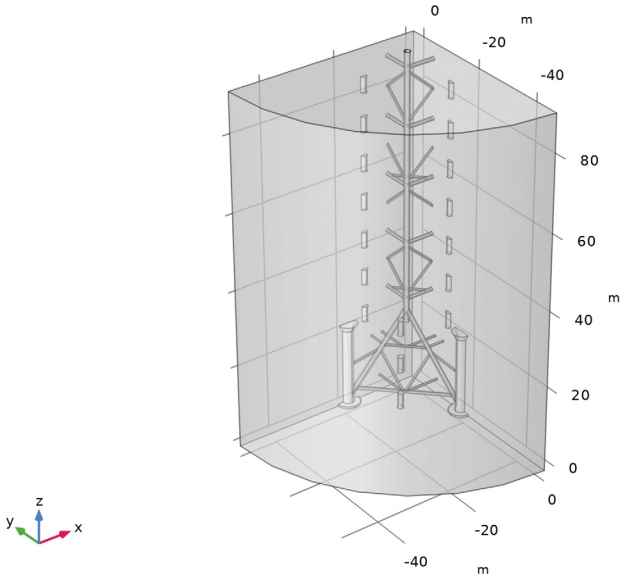

MATERIALS

Load the **Seawater** electrolyte material from the Corrosion material library as follows:

ADD MATERIAL

1 In the **Home** toolbar, click **Add Material** to open the **Add Material** window.

2 Go to the **Add Material** window.

3 In the tree, select **Corrosion** > **Electrolytes** > **Seawater**.

4 Right-click and choose **Add to Component 1 (comp1)**.

The **Seawater** entry contains salinity and temperature-dependent conductivity data. The temperature will be taken from the **Default Model Inputs** node you will define later. The salinity is set to a constant value of 3.5%, but may be altered on the **Seawater** node itself.

5 In the **Home** toolbar, click **Add Material** to close the **Add Material** window.

MATERIALS

Seawater (mat1)

The **Seawater** node will be assigned to all domains by default.

SECONDARY CURRENT DISTRIBUTION (CD)

Electrolyte 1

On the **Electrolyte** node, the electrolyte conductivity is set to be taken from the **Materials** node by default.

GLOBAL DEFINITIONS

Default Model Inputs

Now set up the temperature value used in the model.

1 In the **Model Builder** window, under **Global Definitions** click **Default Model Inputs**.

2 In the **Settings** window for **Default Model Inputs**, locate the **Browse Model Inputs** section.

3 In the tree, select **General** > **Temperature (K) - minput.T**.

4 Find the **Expression for remaining selection** subsection. In the **Temperature** text field, type `T`.

SECONDARY CURRENT DISTRIBUTION (CD)

Electrode Surface 1 - Zinc

1 In the **Physics** toolbar, click **Boundaries** and choose **Electrode Surface**.

2 In the **Settings** window for **Electrode Surface**, type `Electrode Surface 1 - Zinc` in the **Label** text field.

3 Locate the **Boundary Selection** section. From the **Selection** list, choose **Zinc**.

4 Click to expand the **Dissolving–Depositing Species** section. Click **Add**.

5 In the table, enter the following settings:

Species	Density (kg/m^3)	Molar mass (kg/mol)
s1	rho_ZnOH2	M_ZnOH2

6 Click to expand the **Film Resistance** section. From the **Film resistance** list, choose **Thickness and conductivity**.

7 From the Δs list, choose **Total electrode thickness change (cd/es1)**.

8 In the σ_{film} text field, type `sigma_ZnOH2`.

Zn Oxidation

1 In the **Model Builder** window, under **Component 1 (comp1)** > **Secondary Current Distribution (cd)** > **Electrode Surface 1 - Zinc** click **Electrode Reaction 1**.

2 In the **Settings** window for **Electrode Reaction**, type `Zn Oxidation` in the **Label** text field.

3 Locate the **Stoichiometric Coefficients** section. In the n text field, type `2`.

4 In the **Stoichiometric coefficients for dissolving–depositing species:** table, enter the following settings:

Species	Stoichiometric coefficient (l)
`sl`	`-lambda`

5 Locate the **Equilibrium Potential** section. In the E_{eq} text field, type `Eeq_Zn`.

6 Locate the **Electrode Kinetics** section. From the **Kinetics expression type** list, choose **Anodic Tafel equation**.

7 In the i_0 text field, type `i0_Zn`.

8 In the A_a text field, type `A_Zn`.

Electrode Surface 2 - Steel

1 In the **Physics** toolbar, click **Boundaries** and choose **Electrode Surface**.

2 In the **Settings** window for **Electrode Surface**, type `Electrode Surface 2 - Steel` in the **Label** text field.

3 Locate the **Boundary Selection** section. From the **Selection** list, choose **Steel**.

Steel Oxidation

1 In the **Model Builder** window, under **Component 1 (comp1)** > **Secondary Current Distribution (cd)** > **Electrode Surface 2 - Steel** click **Electrode Reaction 1**.

2 In the **Settings** window for **Electrode Reaction**, type `Steel Oxidation` in the **Label** text field.

3 Locate the **Equilibrium Potential** section. In the E_{eq} text field, type `Eeq_Fe`.

4 Locate the **Electrode Kinetics** section. From the **Kinetics expression type** list, choose **Anodic Tafel equation**.

5 In the i_0 text field, type `i0_Fe`.

6 In the A_a text field, type `A_Fe`.

Electrode Surface 2 - Steel

In the **Model Builder** window, click **Electrode Surface 2 - Steel**.

Oxygen reduction

1 In the **Physics** toolbar, click **Attributes** and choose **Electrode Reaction**.

2 In the **Settings** window for **Electrode Reaction**, type `Oxygen reduction` in the **Label** text field.

3 Locate the **Equilibrium Potential** section. In the E_{eq} text field, type `Eeq_O2`.

4 Locate the **Electrode Kinetics** section. From the **Kinetics expression type** list, choose **Cathodic Tafel equation**.

5 In the i_0 text field, type `i0_O2`.

6 In the A_c text field, type `A_O2`.

7 Select the **Limiting current density** checkbox.

8 In the i_{lim} text field, type `ilim_O2`.

Initial Values 1

1 In the **Model Builder** window, under **Component 1 (comp1)** > **Secondary Current Distribution (cd)** click **Initial Values 1**.

2 In the **Settings** window for **Initial Values**, locate the **Initial Values** section.

3 In the *phil* text field, type `-Eeq_Zn`.

Symmetry 1

We can now define the symmetry along the planes in the geometry using the **Symmetry** node.

1 In the **Physics** toolbar, click **Boundaries** and choose **Symmetry**.

2 Select Boundaries 1 and 251 only.

MESH 1

1 In the **Model Builder** window, under **Component 1 (comp1)** click **Mesh 1**.

2 In the **Settings** window for **Mesh**, locate the **Sequence Type** section.

3 From the list, choose **User-controlled mesh**.

Size

1 In the **Model Builder** window, under **Component 1 (comp1)** > **Mesh 1** click **Size**.

2 In the **Settings** window for **Size**, locate the **Element Size** section.

3 Click the **Custom** button.

4 Locate the **Element Size Parameters** section. In the **Maximum element size** text field, type `12`.

5 In the **Minimum element size** text field, type `0.35`.

6 In the **Maximum element growth rate** text field, type `1.6`.

Free Triangular 1

1 In the **Mesh** toolbar, click **More Generators** and choose **Free Triangular**.

2 Right-click **Free Triangular 1** and choose **Move Up**.

3 In the **Settings** window for **Free Triangular**, locate the **Boundary Selection** section.

4 Click **Paste Selection**.

5 In the **Paste Selection** dialog, type `14 17 18 116 117 154 155` in the **Selection** text field.

6 Click **OK**.

Size 1

1 Right-click **Free Triangular 1** and choose **Size**.

2 In the **Settings** window for **Size**, locate the **Element Size** section.

3 From the **Predefined** list, choose **Fine**.

Free Tetrahedral 1

In the **Model Builder** window, under **Component 1 (comp1)** > **Mesh 1** right-click **Free Tetrahedral 1** and choose **Build All**.

STUDY 1

Step 1: Current Distribution Initialization

1 In the **Model Builder** window, under **Study 1** click **Step 1: Current Distribution Initialization**.

2 In the **Settings** window for **Current Distribution Initialization**, locate the **Study Settings** section.

3 From the **Current distribution type** list, choose **Secondary**.

Step 2: Time Dependent

1 In the **Model Builder** window, click **Step 2: Time Dependent**.

2 In the **Settings** window for **Time Dependent**, locate the **Study Settings** section.

3 From the **Time unit** list, choose **d**.

4 In the **Output times** text field, type `0 10 20 30 range(60,60,300) 365`.

5 In the **Study** toolbar, click **Compute**.

RESULTS

Potential vs. SHE (V)

1 In the **Model Builder** window, under **Results** click **Electrode Potential with Respect to Adjacent Reference (cd)**.

2 In the **Settings** window for **3D Plot Group**, type `Potential vs. SHE (V)` in the **Label** text field.

3 Click to expand the **Title** section. From the **Title type** list, choose **Manual**.

4 In the **Title** text area, type `Potential vs. SHE (V)`.

5 Locate the **Plot Settings** section. Clear the **Plot dataset edges** checkbox.

Streamline 1

1 In the **Model Builder** window, expand the **Potential vs. SHE (V)** node.

2 Right-click **Streamline 1** and choose **Disable**.

Selection 1

1 In the **Model Builder** window, right-click **Surface 1** and choose **Selection**.

2 In the **Settings** window for **Selection**, locate the **Selection** section.

3 From the **Selection** list, choose **All Electrodes**.

Potential vs. SHE (V)

1 In the **Model Builder** window, under **Results** click **Potential vs. SHE (V)**.

2 In the **Potential vs. SHE (V)** toolbar, click **Plot**.

3 Click the **Zoom Extents** button in the **Graphics** toolbar.

4 Click the **Transparency** button in the **Graphics** toolbar.

5 In the **Settings** window for **3D Plot Group**, locate the **Data** section.

6 From the **Time (d)** list, choose **0**.

7 Click to expand the **Title** section. In the **Parameter indicator** text field, type `Time= 0 d`.

8 In the **Potential vs. SHE (V)** toolbar, click **Plot**.

Oxide Layer Thickness

1 In the **Model Builder** window, under **Results** click **Total Electrode Thickness Change (cd)**.

2 In the **Settings** window for **3D Plot Group**, type `Oxide Layer Thickness` in the **Label** text field.

3 Click to expand the **Selection** section. From the **Geometric entity level** list, choose **Boundary**.

4 From the **Selection** list, choose **Zinc**.

5 Locate the **Plot Settings** section. Clear the **Plot dataset edges** checkbox.

6 In the **Oxide Layer Thickness** toolbar, click **Plot**.

7 Click the **Zoom Extents** button in the **Graphics** toolbar.

Local Corrosion Current Density

1 In the **Results** toolbar, click **1D Plot Group**.

2 In the **Settings** window for **1D Plot Group**, type `Local Corrosion Current Density` in the **Label** text field.

3 Click to expand the **Title** section. From the **Title type** list, choose **Label**.

4 Locate the **Legend** section. From the **Position** list, choose **Lower right**.

Point Graph 1

1 Right-click **Local Corrosion Current Density** and choose **Point Graph**.

2 Click the **Transparency** button in the **Graphics** toolbar.

3 Select Point 28 only.

4 In the **Settings** window for **Point Graph**, click **Replace Expression** in the upper-right corner of the **y-Axis Data** section. From the menu, choose **Component 1 (comp1)** > **Secondary Current Distribution** > **Electrode kinetics** > **cd.iloc_er1 - Local current density - A/m²**.

5 Click to expand the **Legends** section. Select the **Show legends** checkbox.

6 From the **Legends** list, choose **Manual**.

7 In the table, enter the following settings:

Legends
`Top of leg`

Point Graph 2

1 Right-click **Point Graph 1** and choose **Duplicate**.

2 In the **Settings** window for **Point Graph**, locate the **Selection** section.

3 Click to select the **Activate Selection** toggle button.

4 Select Point 22 only.

5 Locate the **Legends** section. In the table, enter the following settings:

Legends
`Bottom of leg`

6 In the **Local Corrosion Current Density** toolbar, click **Plot**.

Appendix — Geometry Modeling Instructions

From the **File** menu, choose **New**.

NEW

In the **New** window, click **Model Wizard**.

MODEL WIZARD

1 In the **Model Wizard** window, click **3D**.

2 Click **Done**.

GEOMETRY 1

Cylinder 1 (cyl1)

1 In the **Geometry** toolbar, click **Cylinder**.

2 In the **Settings** window for **Cylinder**, locate the **Size and Shape** section.

3 In the **Radius** text field, type `3[m]`.

4 In the **Height** text field, type `0.5[m]`.

5 Locate the **Position** section. In the **x** text field, type `-19[m]`.

6 Locate the **Selections of Resulting Entities** section. Find the **Cumulative selection** subsection. Click **New**.

7 In the **New Cumulative Selection** dialog, type `Steel` in the **Name** text field.

8 Click **OK**.

You can collect geometry objects into cumulative selections that are available as input for subsequent geometry operations and when defining physics settings. The benefit of using selections here is a faster model setup, since you can avoid selecting geometric objects from the graphics display.

9 In the **Settings** window for **Cylinder**, click **Build Selected**.

10 Click the **Zoom Extents** button in the **Graphics** toolbar.

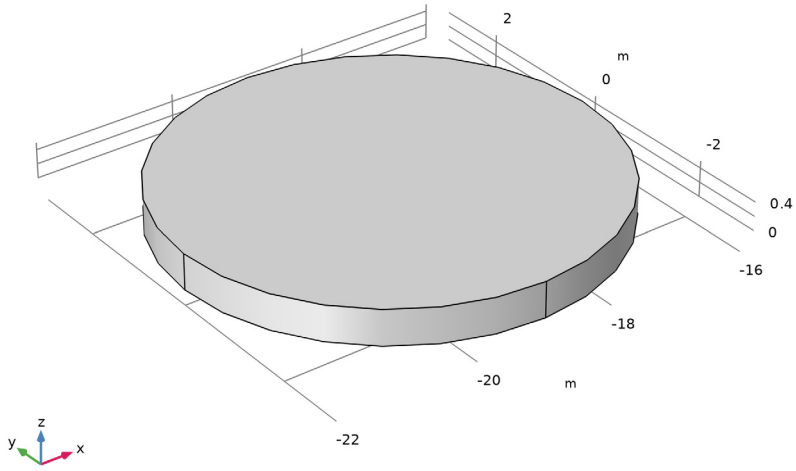

Cylinder 2 (cyl2)

1 In the **Geometry** toolbar, click **Cylinder**.

2 In the **Settings** window for **Cylinder**, locate the **Size and Shape** section.

3 In the **Radius** text field, type `1.5[m]`.

4 In the **Height** text field, type `20[m]`.

5 Locate the **Position** section. In the **x** text field, type `-19[m]`.

6 In the **z** text field, type `0.5[m]`.

7 Locate the **Selections of Resulting Entities** section. Find the **Cumulative selection** subsection. From the **Contribute to** list, choose **Steel**.

Cone 1 (cone1)

1 In the **Geometry** toolbar, click **Cone**.

2 In the **Settings** window for **Cone**, locate the **Size and Shape** section.

3 In the **Bottom radius** text field, type `1.5[m]`.

4 In the **Height** text field, type `1.6[m]`.

5 From the **Specify top size using** list, choose **Angle**.

6 In the **Semiangle** text field, type `-30[deg]`.

7 Locate the **Position** section. In the **x** text field, type `-19[m]`.

8 In the **z** text field, type `20.5[m]`.

9 Locate the **Selections of Resulting Entities** section. Find the **Cumulative selection** subsection. From the **Contribute to** list, choose **Steel**.

10 Click **Build Selected**.

11 Click the **Zoom Extents** button in the **Graphics** toolbar.

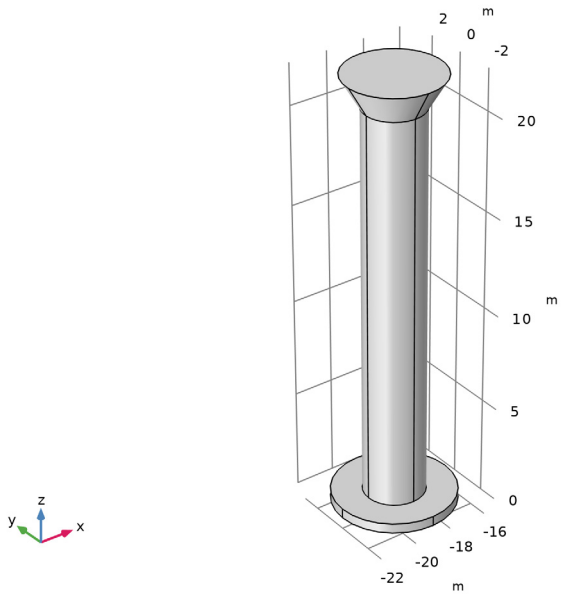

Cylinder 3 (cyl3)

1 In the **Geometry** toolbar, click **Cylinder**.

2 In the **Settings** window for **Cylinder**, locate the **Size and Shape** section.

3 In the **Radius** text field, type `0.5[m]`.

4 In the **Height** text field, type `27[m]`.

5 Locate the **Position** section. In the **x** text field, type `-19[m]`.

6 In the **z** text field, type `4.2[m]`.

7 Locate the **Axis** section. From the **Axis type** list, choose **Cartesian**.

Using this setting you can easily create a cylinder with an arbitrary axis orientation.

8 In the **x** text field, type `1`.

9 In the **y** text field, type `-1`.

10 In the **z** text field, type `0`.

11 Locate the **Selections of Resulting Entities** section. Find the **Cumulative selection** subsection. From the **Contribute to** list, choose **Steel**.

12 Click **Build Selected**.

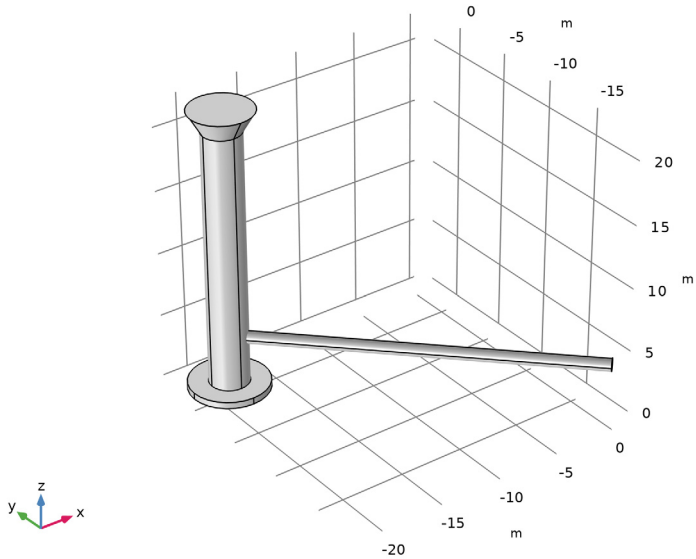

Cylinder 4 (cyl4)

1 In the **Geometry** toolbar, click **Cylinder**.

2 In the **Settings** window for **Cylinder**, locate the **Size and Shape** section.

3 In the **Radius** text field, type `0.3[m]`.

4 In the **Height** text field, type `19[m]`.

5 Locate the **Position** section. In the **x** text field, type `-9.5[m]`.

6 In the **y** text field, type `-9.75[m]`.

7 In the **z** text field, type `4.2[m]`.

8 Locate the **Axis** section. From the **Axis type** list, choose **x-axis**.

9 Locate the **Selections of Resulting Entities** section. Find the **Cumulative selection** subsection. From the **Contribute to** list, choose **Steel**.

10 Click **Build Selected**.

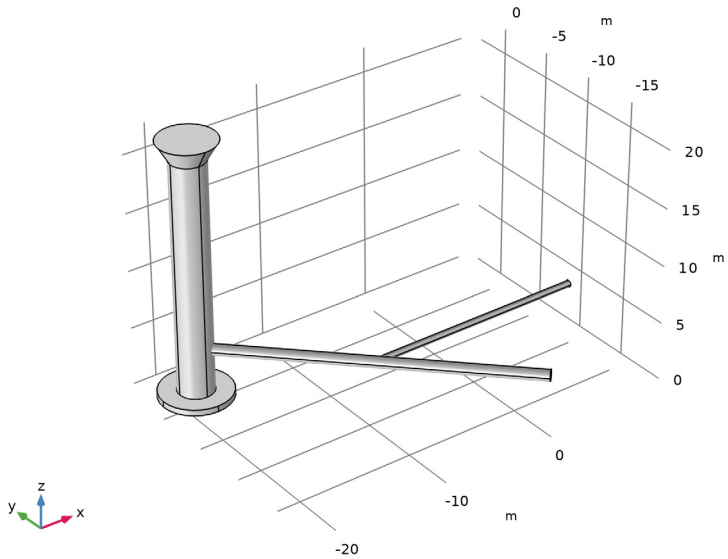

Cylinder 5 (cyl5)

1 In the **Geometry** toolbar, click **Cylinder**.

2 In the **Settings** window for **Cylinder**, locate the **Size and Shape** section.

3 In the **Radius** text field, type `0.65[m]`.

4 In the **Height** text field, type `28[m]`.

5 Locate the **Position** section. In the **x** text field, type `-20[m]`.

6 In the **z** text field, type `1[m]`.

7 Locate the **Selections of Resulting Entities** section. Select the **Resulting objects selection** checkbox.

8 From the **Show in physics** list, choose **Off**.

You can turn off the visibility of the selection outside the geometry sequence since it is not needed anywhere else.

Rotate 1 (rot1)

1 In the **Geometry** toolbar, click **Transforms** and choose **Rotate**.

2 In the **Settings** window for **Rotate**, locate the **Input** section.

3 From the **Input objects** list, choose **Cylinder 5**.

4 Locate the **Rotation** section. From the **Specify** list, choose **Euler angles (Z-X-Z)**.

With the option to define Euler angles you can easily set up a complex rotation in just one step.

5 In the α text field, type `60[deg]`.

6 In the β text field, type `30[deg]`.

7 Locate the **Point on Axis of Rotation** section. In the **x** text field, type `-20[m]`.

8 Locate the **Selections of Resulting Entities** section. Find the **Cumulative selection** subsection. From the **Contribute to** list, choose **Steel**.

9 Click **Build Selected**.

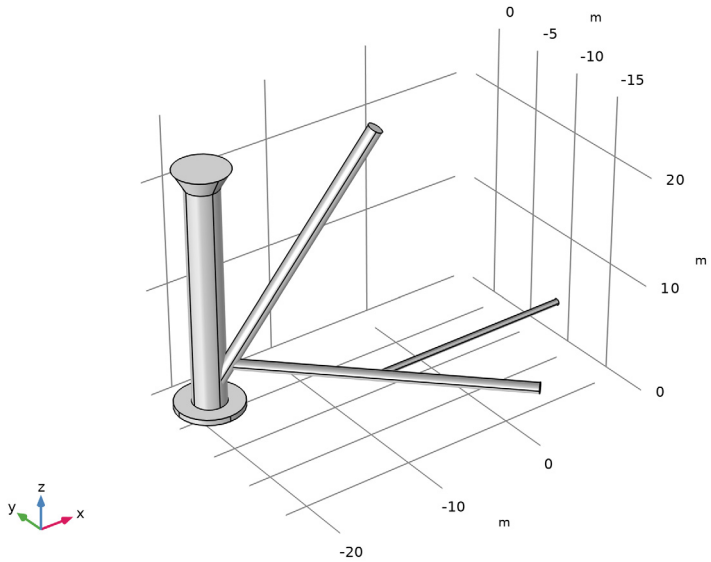

Mirror 1 (mir1)

1 In the **Geometry** toolbar, click **Transforms** and choose **Mirror**.

2 In the **Settings** window for **Mirror**, locate the **Input** section.

3 From the **Input objects** list, choose **Cylinder 5**.

4 Select the **Keep input objects** checkbox.

5 Locate the **Normal Vector to Plane of Reflection** section. In the **y** text field, type `1`.

6 In the **z** text field, type `0`.

7 Locate the **Selections of Resulting Entities** section. Find the **Cumulative selection** subsection. From the **Contribute to** list, choose **Steel**.

8 Click **Build Selected**.

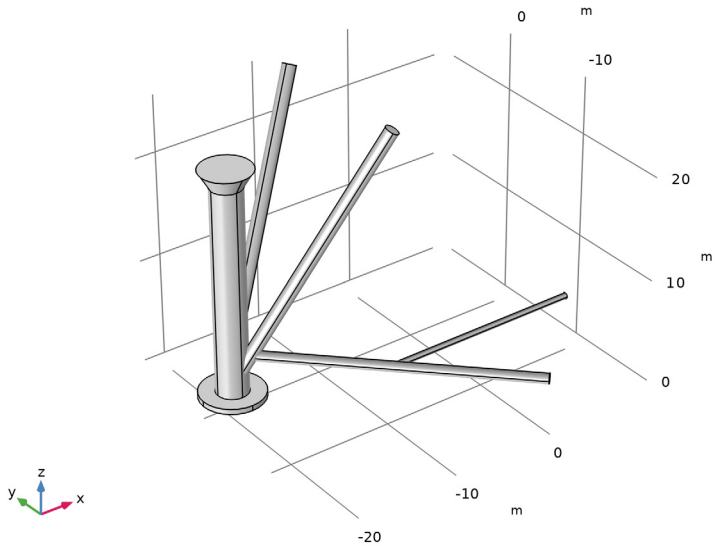

Cylinder 6 (cyl6)

1 In the **Geometry** toolbar, click **Cylinder**.

2 In the **Settings** window for **Cylinder**, locate the **Size and Shape** section.

3 In the **Radius** text field, type `0.3[m]`.

4 In the **Height** text field, type `10[m]`.

5 Locate the **Position** section. In the **x** text field, type `-20[m]`.

6 In the **z** text field, type `10[m]`.

7 Locate the **Selections of Resulting Entities** section. Select the **Resulting objects selection** checkbox.

8 From the **Show in physics** list, choose **Off**.

Rotate 2 (rot2)

1 In the **Geometry** toolbar, click **Transforms** and choose **Rotate**.

2 In the **Settings** window for **Rotate**, locate the **Input** section.

3 From the **Input objects** list, choose **Cylinder 6**.

4 Locate the **Rotation** section. From the **Specify** list, choose **Euler angles (Z-X-Z)**.

5 In the α text field, type `60[deg]`.

6 In the β text field, type `60[deg]`.

7 Locate the **Point on Axis of Rotation** section. In the **x** text field, type `-20[m]`.

8 In the **z** text field, type `10[m]`.

9 Locate the **Selections of Resulting Entities** section. Find the **Cumulative selection** subsection. From the **Contribute to** list, choose **Steel**.

10 Click **Build Selected**.

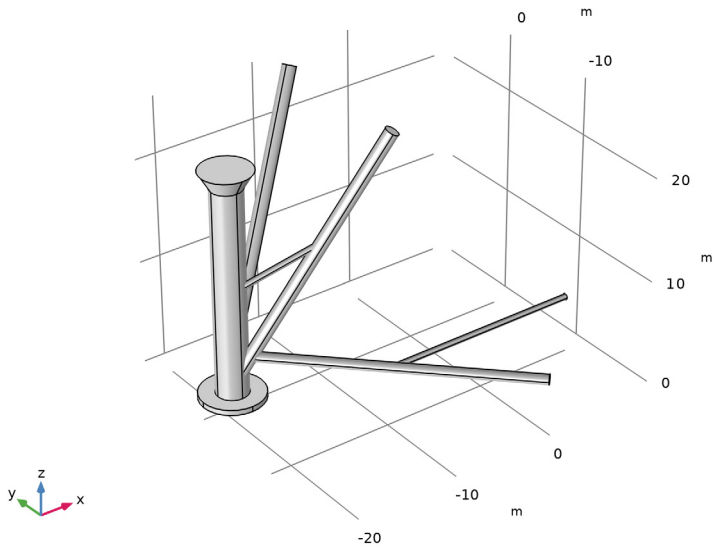

Mirror 2 (mir2)

1 In the **Geometry** toolbar, click **Transforms** and choose **Mirror**.

2 In the **Settings** window for **Mirror**, locate the **Input** section.

3 From the **Input objects** list, choose **Cylinder 6**.

4 Select the **Keep input objects** checkbox.

5 Locate the **Normal Vector to Plane of Reflection** section. In the **y** text field, type `1`.

6 In the **z** text field, type `0`.

7 Locate the **Selections of Resulting Entities** section. Find the **Cumulative selection** subsection. From the **Contribute to** list, choose **Steel**.

8 Click **Build Selected**.

9 Click **Highlight Result**. This will highlight the resulting objects of the operation.

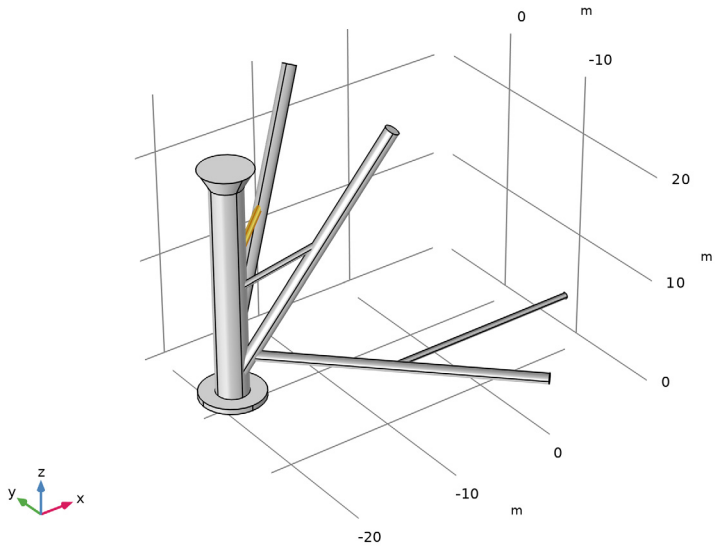

Cylinder 7 (cyl7)

1 In the **Geometry** toolbar, click **Cylinder**.

2 In the **Settings** window for **Cylinder**, locate the **Size and Shape** section.

3 In the **Radius** text field, type `0.3[m]`.

4 In the **Height** text field, type `10[m]`.

5 Locate the **Position** section. In the **x** text field, type `-12[m]`.

6 In the **y** text field, type `-5[m]`.

7 In the **z** text field, type `16[m]`.

8 Locate the **Axis** section. From the **Axis type** list, choose **y-axis**.

9 Locate the **Selections of Resulting Entities** section. Select the **Resulting objects selection** checkbox.

10 From the **Show in physics** list, choose **Off**.

11 Click **Build Selected**.

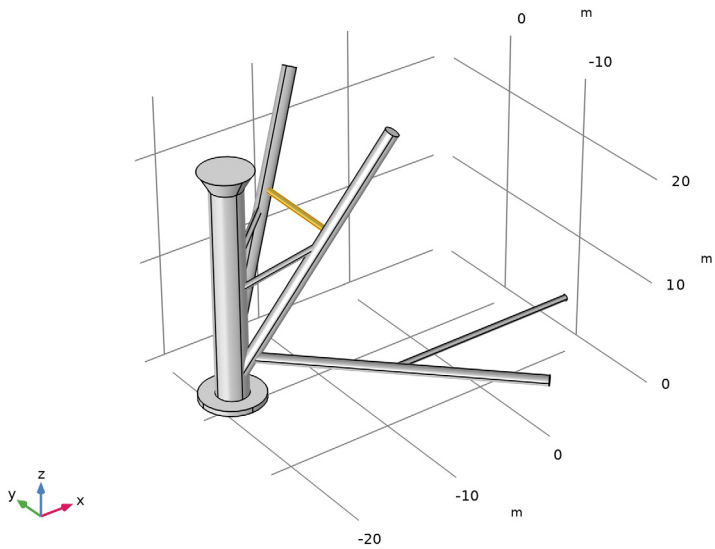

Rotate 3 (rot3)

1 In the **Geometry** toolbar, click **Transforms** and choose **Rotate**.

2 In the **Settings** window for **Rotate**, locate the **Input** section.

3 From the **Input objects** list, choose **Cylinder 7**.

4 Locate the **Rotation** section. In the **Angle** text field, type `0[deg] 225[deg]`.

5 Locate the **Point on Axis of Rotation** section. In the **x** text field, type `-12[m]`.

6 In the **y** text field, type `-5[m]`.

7 In the **z** text field, type `16[m]`.

8 Locate the **Selections of Resulting Entities** section. Find the **Cumulative selection** subsection. From the **Contribute to** list, choose **Steel**.

9 Click **Build Selected**.

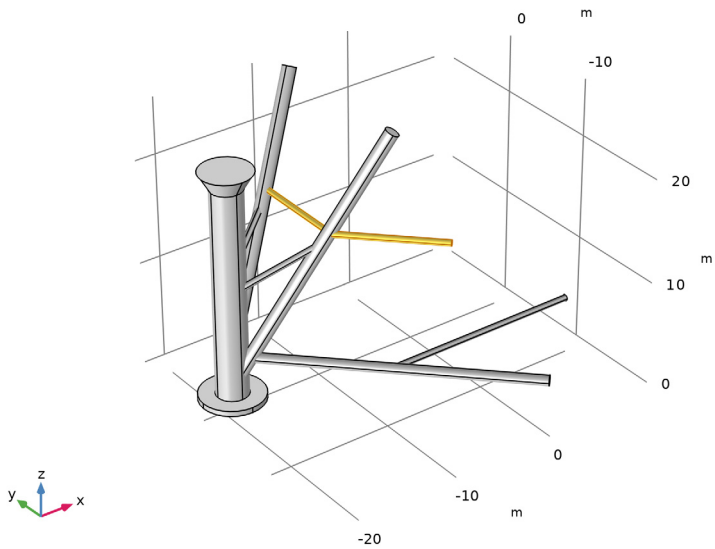

Cylinder 8 (cyl8)

1 In the **Geometry** toolbar, click **Cylinder**.

2 In the **Settings** window for **Cylinder**, locate the **Size and Shape** section.

3 In the **Radius** text field, type `0.3[m]`.

4 In the **Height** text field, type `16[m]`.

5 Locate the **Position** section. In the **x** text field, type `-9[m]`.

6 In the **y** text field, type `-8[m]`.

7 In the **z** text field, type `16[m]`.

8 Locate the **Axis** section. From the **Axis type** list, choose **y-axis**.

9 Locate the **Selections of Resulting Entities** section. Find the **Cumulative selection** subsection. From the **Contribute to** list, choose **Steel**.

10 Click **Build Selected**.

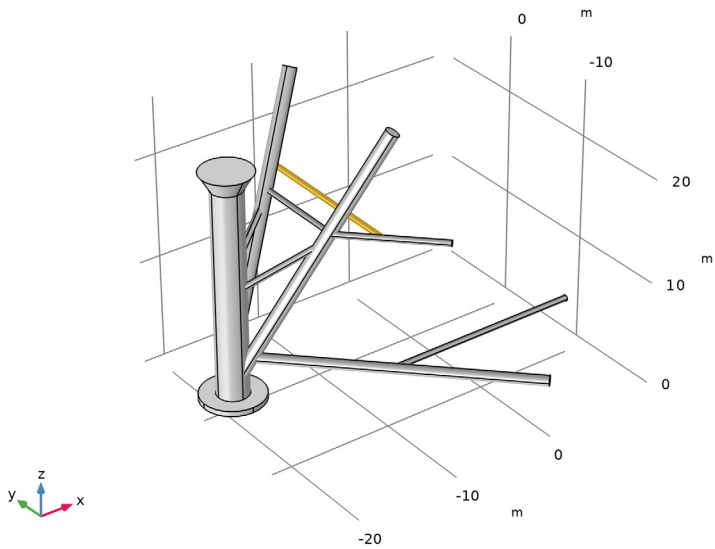

Cylinder 9 (cyl9)

1 In the **Geometry** toolbar, click **Cylinder**.

2 In the **Settings** window for **Cylinder**, locate the **Size and Shape** section.

3 In the **Radius** text field, type `0.3[m]`.

4 In the **Height** text field, type `12.5[m]`.

5 Locate the **Position** section. In the **x** text field, type `-9.7[m]`.

6 In the **y** text field, type `-9.5[m]`.

7 In the **z** text field, type `4.2[m]`.

8 Locate the **Selections of Resulting Entities** section. Select the **Resulting objects selection** checkbox.

9 From the **Show in physics** list, choose **Off**.

Rotate 4 (rot4)

1 In the **Geometry** toolbar, click **Transforms** and choose **Rotate**.

2 In the **Settings** window for **Rotate**, locate the **Input** section.

3 From the **Input objects** list, choose **Cylinder 9**.

4 Locate the **Rotation** section. From the **Specify** list, choose **Euler angles (Z-X-Z)**.

5 In the α text field, type `30[deg]`.

6 In the β text field, type `-30[deg]`.

7 Locate the **Point on Axis of Rotation** section. In the **x** text field, type `-9.7[m]`.

8 In the **y** text field, type `-9.5[m]`.

9 In the **z** text field, type `4.2[m]`.

10 Locate the **Selections of Resulting Entities** section. Find the **Cumulative selection** subsection. From the **Contribute to** list, choose **Steel**.

11 Click **Build Selected**.

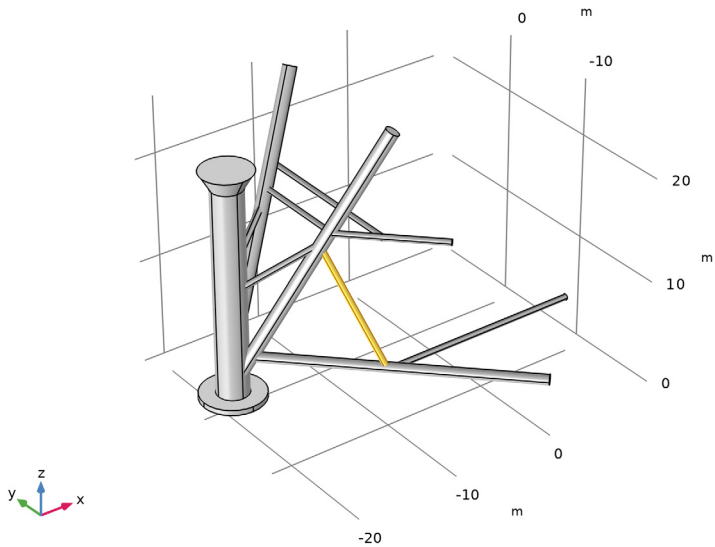

Mirror 3 (mir3)

1 In the **Geometry** toolbar, click **Transforms** and choose **Mirror**.

2 In the **Settings** window for **Mirror**, locate the **Input** section.

3 From the **Input objects** list, choose **Cylinder 9**.

4 Select the **Keep input objects** checkbox.

5 Locate the **Normal Vector to Plane of Reflection** section. In the **x** text field, type `-1`.

6 In the **y** text field, type `1`.

7 In the **z** text field, type `0`.

8 Locate the **Selections of Resulting Entities** section. Find the **Cumulative selection** subsection. From the **Contribute to** list, choose **Steel**.

9 Click **Build Selected**.

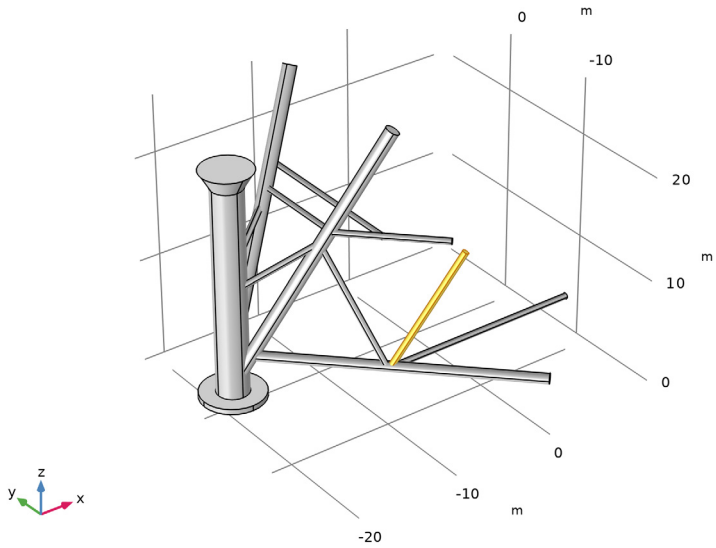

Union 1 (uni1)

Next, generate the union of the objects you have created so far. The automatically determined tolerance for the union operation is set based on the geometry size, and may become too large to properly resolve local details if you create the union of all objects in one operation. To avoid that this happens, generate the union of just a few neighboring objects at a time.

1 In the **Geometry** toolbar, click **Booleans and Partitions** and choose **Union**.

2 In the **Settings** window for **Union**, locate the **Union** section.

3 From the **Input objects** list, choose **Steel**.

4 Clear the **Keep interior boundaries** checkbox.

Rotate 5 (rot5)

1 In the **Geometry** toolbar, click **Transforms** and choose **Rotate**.

2 In the **Settings** window for **Rotate**, locate the **Input** section.

3 From the **Input objects** list, choose **Steel**.

4 Locate the **Rotation** section. In the **Angle** text field, type `range(90[deg],90[deg],360[deg])`.

5 Click **Build Selected**.

6 Click the **Zoom Extents** button in the **Graphics** toolbar.

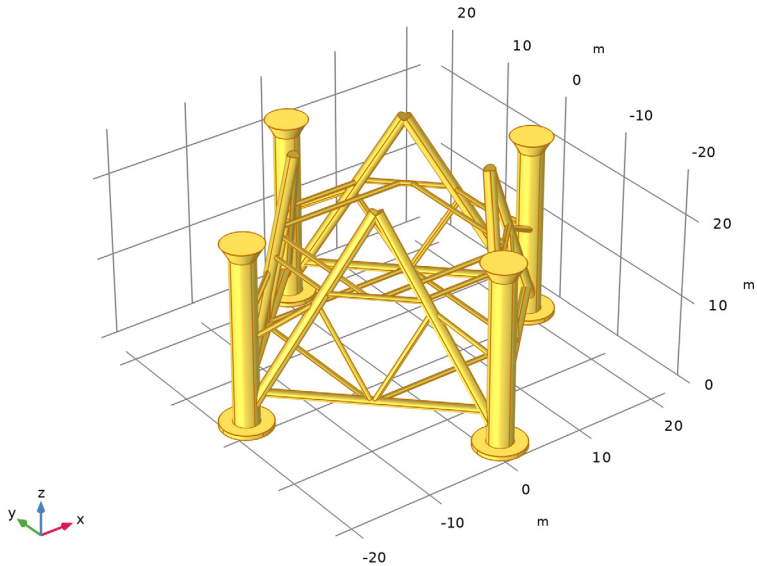

Union 2 (uni2)

1 In the **Geometry** toolbar, click **Booleans and Partitions** and choose **Union**.

2 In the **Settings** window for **Union**, locate the **Union** section.

3 From the **Input objects** list, choose **Steel**.

4 Clear the **Keep interior boundaries** checkbox.

Cylinder 10 (cyl10)

1 In the **Geometry** toolbar, click **Cylinder**.

2 In the **Settings** window for **Cylinder**, locate the **Size and Shape** section.

3 In the **Radius** text field, type `0.8[m]`.

4 In the **Height** text field, type `70[m]`.

5 Locate the **Position** section. In the **x** text field, type `-7.3[m]`.

6 In the **y** text field, type `7.3[m]`.

7 In the **z** text field, type `22[m]`.

8 Locate the **Selections of Resulting Entities** section. Find the **Cumulative selection** subsection. Click **New**.

9 In the **New Cumulative Selection** dialog, type `Top structure` in the **Name** text field.

10 Click **OK**.

11 In the **Settings** window for **Cylinder**, click **Build Selected**.

12 Click the **Zoom Extents** button in the **Graphics** toolbar.

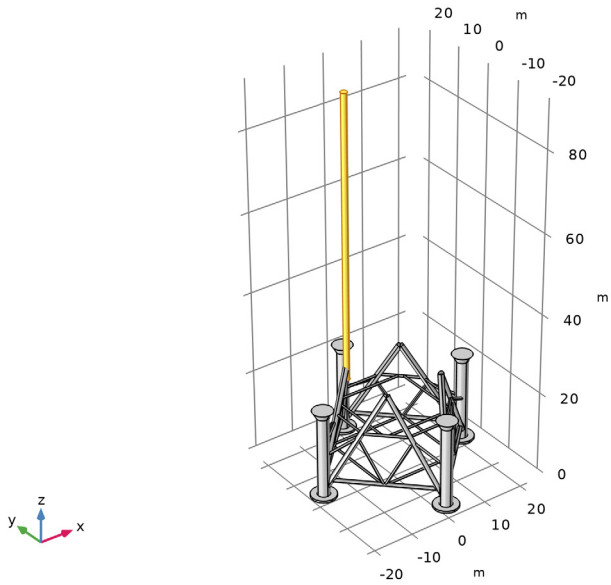

Cylinder 11 (cyl11)

1 In the **Geometry** toolbar, click **Cylinder**.

2 In the **Settings** window for **Cylinder**, locate the **Size and Shape** section.

3 In the **Radius** text field, type `0.5[m]`.

4 In the **Height** text field, type `14[m]`.

5 Locate the **Position** section. In the **x** text field, type `-7.3[m]`.

6 In the **y** text field, type `-7[m]`.

7 In the **z** text field, type `28[m]`.

8 Locate the **Axis** section. From the **Axis type** list, choose **y-axis**.

9 Locate the **Selections of Resulting Entities** section. Select the **Resulting objects selection** checkbox.

10 From the **Show in physics** list, choose **Off**.

Array 1 (arr1)

1 In the **Geometry** toolbar, click **Transforms** and choose **Array**.

2 In the **Settings** window for **Array**, locate the **Input** section.

3 From the **Input objects** list, choose **Cylinder 11**.

4 Locate the **Size** section. In the **z size** text field, type `5`.

5 Locate the **Displacement** section. In the **z** text field, type `15[m]`.

6 Locate the **Selections of Resulting Entities** section. Find the **Cumulative selection** subsection. From the **Contribute to** list, choose **Top structure**.

7 Click **Build Selected**.

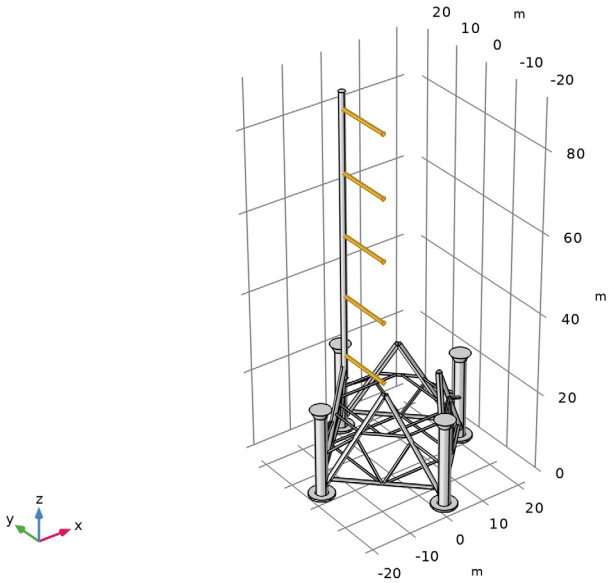

Cylinder 12 (cyl12)

1 In the **Geometry** toolbar, click **Cylinder**.

2 In the **Settings** window for **Cylinder**, locate the **Size and Shape** section.

3 In the **Radius** text field, type `0.3[m]`.

4 In the **Height** text field, type `9[m]`.

5 Locate the **Position** section. In the **x** text field, type `-7.3[m]`.

6 In the **y** text field, type `1[m]`.

7 In the **z** text field, type `28[m]`.

8 Locate the **Axis** section. From the **Axis type** list, choose **Cartesian**.

9 In the **x** text field, type `1`.

10 In the **y** text field, type `1`.

11 In the **z** text field, type `0`.

12 Locate the **Selections of Resulting Entities** section. Select the **Resulting objects selection** checkbox.

13 From the **Show in physics** list, choose **Off**.

Move 1 (mov1)

You can also use the **Move** operation to create an array of objects.

1 In the **Geometry** toolbar, click **Transforms** and choose **Move**.

2 In the **Settings** window for **Move**, locate the **Input** section.

3 From the **Input objects** list, choose **Cylinder 12**.

4 Locate the **Displacement** section. In the **z** text field, type `0[m] 30[m]`.

5 Locate the **Selections of Resulting Entities** section. Find the **Cumulative selection** subsection. From the **Contribute to** list, choose **Top structure**.

6 Click **Build Selected**.

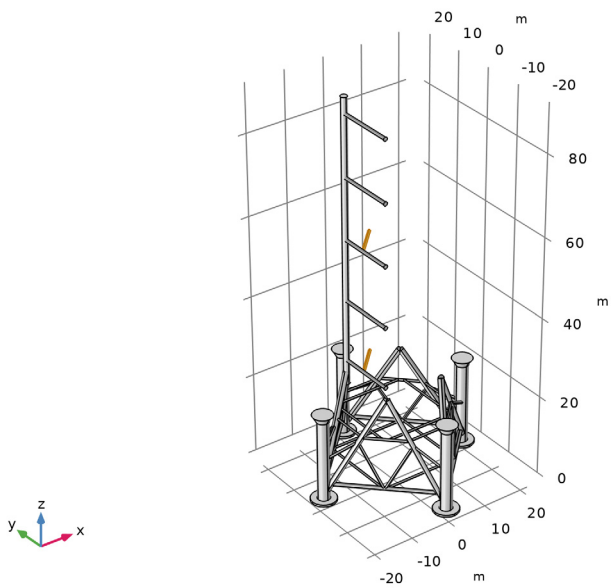

Cylinder 13 (cyl13)

1 In the **Geometry** toolbar, click **Cylinder**.

2 In the **Settings** window for **Cylinder**, locate the **Size and Shape** section.

3 In the **Radius** text field, type `0.3[m]`.

4 In the **Height** text field, type `19[m]`.

5 Locate the **Position** section. In the **x** text field, type `-7.3[m]`.

6 In the **y** text field, type `-7.3[m]`.

7 In the **z** text field, type `29[m]`.

8 Locate the **Selections of Resulting Entities** section. Select the **Resulting objects selection** checkbox.

9 From the **Show in physics** list, choose **Off**.

Rotate 6 (rot6)

1 In the **Geometry** toolbar, click **Transforms** and choose **Rotate**.

2 In the **Settings** window for **Rotate**, locate the **Input** section.

3 From the **Input objects** list, choose **Cylinder 13**.

4 Locate the **Rotation** section. From the **Axis type** list, choose **x-axis**.

5 In the **Angle** text field, type `-48[deg]`.

6 Locate the **Point on Axis of Rotation** section. In the **y** text field, type `-7.3[m]`.

7 In the **z** text field, type `29[m]`.

8 Click **Build Selected**.

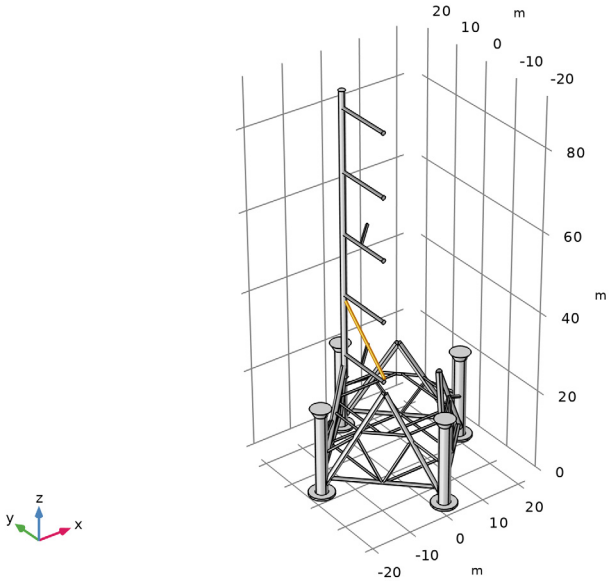

Mirror 4 (mir4)

1 In the **Geometry** toolbar, click **Transforms** and choose **Mirror**.

2 In the **Settings** window for **Mirror**, locate the **Input** section.

3 From the **Input objects** list, choose **Cylinder 13**.

4 Select the **Keep input objects** checkbox.

5 Locate the **Normal Vector to Plane of Reflection** section. In the **y** text field, type 1.

6 In the **z** text field, type 0.

7 Click **Build Selected**.

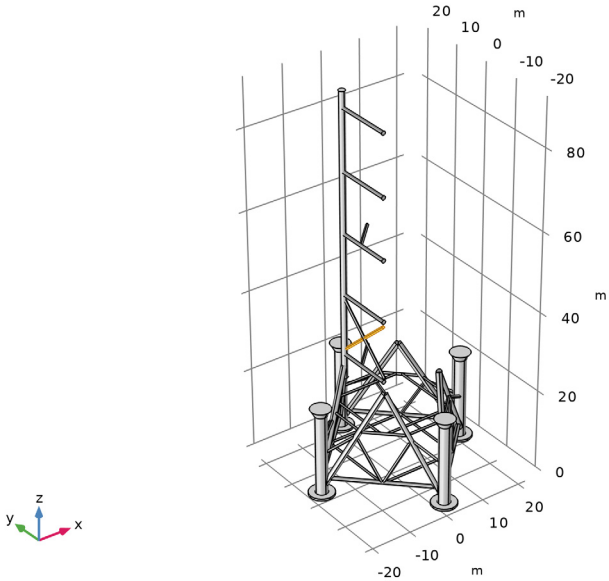

Move 2 (mov2)

1 In the **Geometry** toolbar, click **Transforms** and choose **Move**.

2 In the **Settings** window for **Move**, locate the **Input** section.

3 From the **Input objects** list, choose **Cylinder 13**.

4 Locate the **Displacement** section. In the **z** text field, type `0[m] 45[m]`.

5 Locate the **Selections of Resulting Entities** section. Find the **Cumulative selection** subsection. From the **Contribute to** list, choose **Top structure**.

6 Click **Build Selected**.

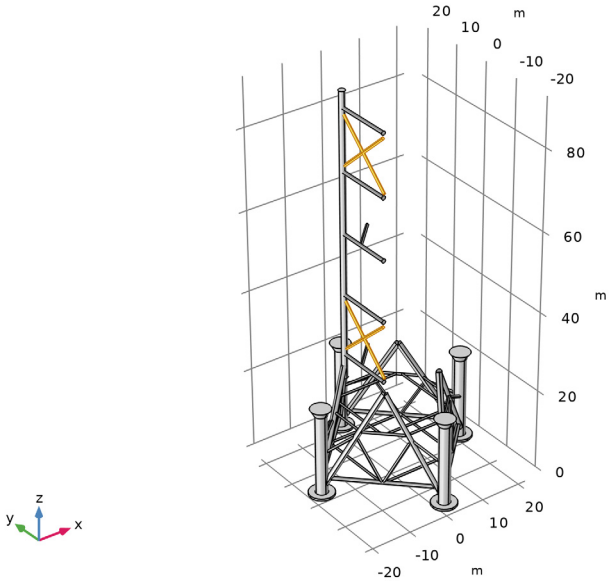

Union 3 (uni3)

1 In the **Geometry** toolbar, click **Booleans and Partitions** and choose **Union**.

2 In the **Settings** window for **Union**, locate the **Union** section.

3 From the **Input objects** list, choose **Top structure**.

4 Clear the **Keep interior boundaries** checkbox.

Rotate 7 (rot7)

1 In the **Geometry** toolbar, click **Transforms** and choose **Rotate**.

2 In the **Settings** window for **Rotate**, locate the **Input** section.

3 From the **Input objects** list, choose **Top structure**.

4 Locate the **Rotation** section. In the **Angle** text field, type `range(90[deg],90[deg],360[eg])`.

5 Click **Build Selected**.

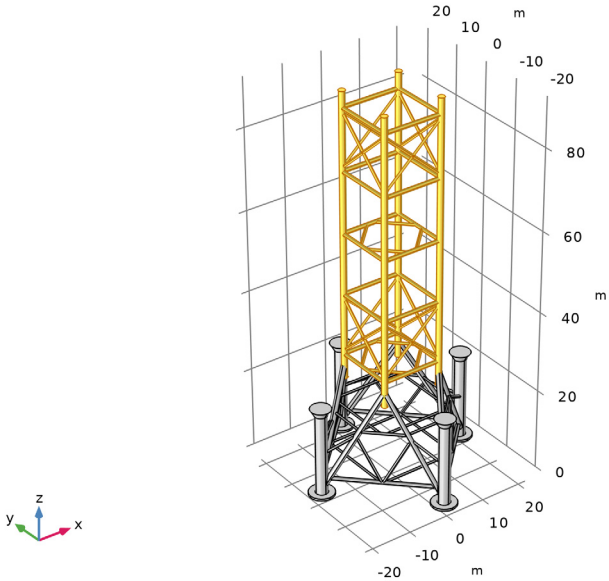

Union 4 (uni4)

1 In the **Geometry** toolbar, click **Booleans and Partitions** and choose **Union**.

2 In the **Settings** window for **Union**, locate the **Union** section.

3 From the **Input objects** list, choose **Top structure**.

4 Clear the **Keep interior boundaries** checkbox.

Cylinder 14 (cyl14)

1 In the **Geometry** toolbar, click **Cylinder**.

2 In the **Settings** window for **Cylinder**, locate the **Size and Shape** section.

3 In the **Radius** text field, type `0.3[m]`.

4 In the **Height** text field, type `19[m]`.

5 Locate the **Position** section. In the **x** text field, type `-7.3[m]`.

6 In the **z** text field, type `41[m]`.

7 Locate the **Selections of Resulting Entities** section. Select the **Resulting objects selection** checkbox.

8 From the **Show in physics** list, choose **Off**.

9 Find the **Cumulative selection** subsection. From the **Contribute to** list, choose **Top structure**.

Rotate 8 (rot8)

1 In the **Geometry** toolbar, click **Transforms** and choose **Rotate**.

2 In the **Settings** window for **Rotate**, locate the **Input** section.

3 From the **Input objects** list, choose **Cylinder 14**.

4 Locate the **Rotation** section. From the **Axis type** list, choose **x-axis**.

5 In the **Angle** text field, type `48[deg]`.

6 Locate the **Point on Axis of Rotation** section. In the **z** text field, type `50.5[m]`.

Mirror 5 (mir5)

1 In the **Geometry** toolbar, click **Transforms** and choose **Mirror**.

2 In the **Settings** window for **Mirror**, locate the **Input** section.

3 From the **Input objects** list, choose **Cylinder 14**.

4 Select the **Keep input objects** checkbox.

5 Locate the **Point on Plane of Reflection** section. In the **z** text field, type `58[m]`.

6 Click **Build Selected**.

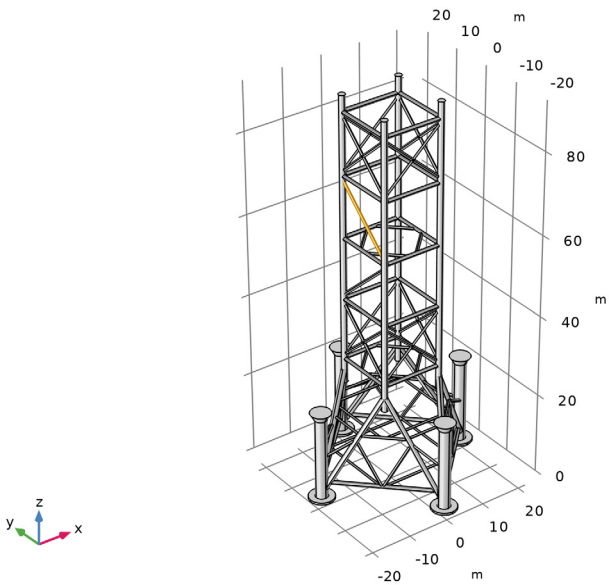

Mirror 6 (mir6)

1 In the **Geometry** toolbar, click **Transforms** and choose **Mirror**.

2 In the **Settings** window for **Mirror**, locate the **Input** section.

3 From the **Input objects** list, choose **Cylinder 14**.

4 Select the **Keep input objects** checkbox.

5 Locate the **Point on Plane of Reflection** section. In the **x** text field, type `1[m]`.

6 In the **y** text field, type `1[m]`.

7 Locate the **Normal Vector to Plane of Reflection** section. In the **x** text field, type `1`.

8 In the **y** text field, type `-1`.

9 In the **z** text field, type `0`.

10 Click **Build Selected**.

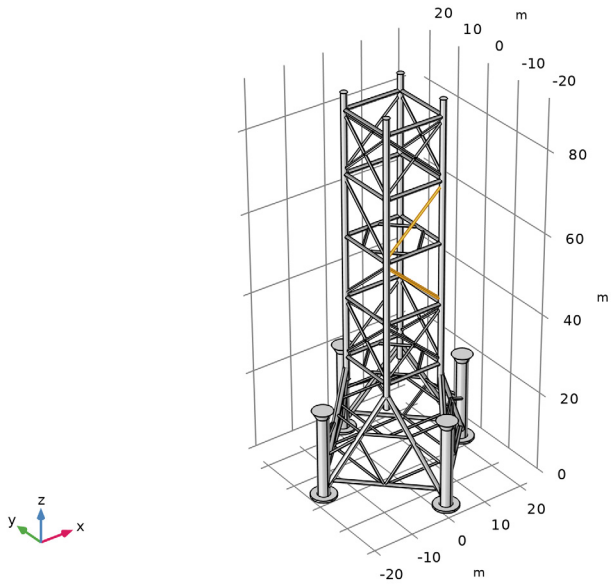

Rotate 9 (rot9)

1 In the **Geometry** toolbar, click **Transforms** and choose **Rotate**.

2 In the **Settings** window for **Rotate**, locate the **Input** section.

3 From the **Input objects** list, choose **Cylinder 14**.

4 Locate the **Rotation** section. In the **Angle** text field, type `0[deg] 180[deg]`.

5 Click **Build Selected**.

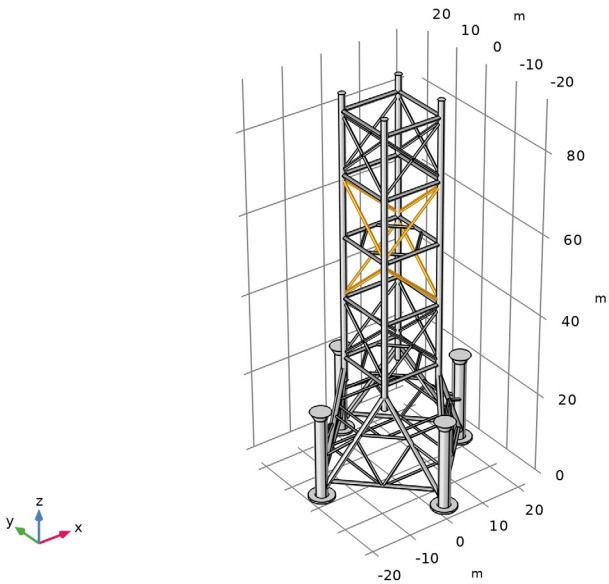

Union 5 (uni5)

1 In the **Geometry** toolbar, click **Booleans and Partitions** and choose **Union**.

2 In the **Settings** window for **Union**, locate the **Union** section.

3 From the **Input objects** list, choose **Top structure**.

4 Clear the **Keep interior boundaries** checkbox.

5 Locate the **Selections of Resulting Entities** section. Find the **Cumulative selection** subsection. From the **Contribute to** list, choose **Steel**.

Union 6 (uni6)

1 In the **Geometry** toolbar, click **Booleans and Partitions** and choose **Union**.

2 In the **Settings** window for **Union**, locate the **Union** section.

3 From the **Input objects** list, choose **Steel**.

4 Clear the **Keep interior boundaries** checkbox.

Cylinder 15 (cyl15)

1 In the **Geometry** toolbar, click **Cylinder**.

2 In the **Settings** window for **Cylinder**, locate the **Size and Shape** section.

3 In the **Radius** text field, type `0.8[m]`.

4 In the **Height** text field, type `4[m]`.

5 Locate the **Position** section. In the **x** text field, type `-14[m]`.

6 In the **y** text field, type `14[m]`.

7 In the **z** text field, type `4[m]`.

8 Locate the **Selections of Resulting Entities** section. Select the **Resulting objects selection** checkbox.

9 From the **Show in physics** list, choose **Off**.

10 Find the **Cumulative selection** subsection. Click **New**.

11 In the **New Cumulative Selection** dialog, type `Zinc` in the **Name** text field.

12 Click **OK**.

13 In the **Settings** window for **Cylinder**, click **Build Selected**.

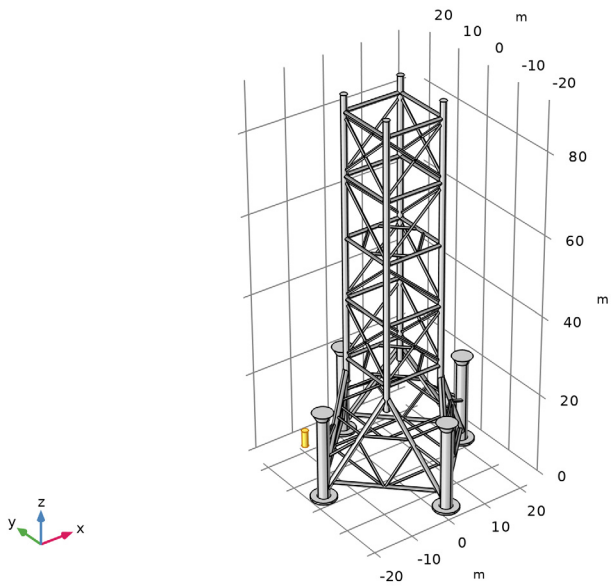

Array 2 (arr2)

1 In the **Geometry** toolbar, click **Transforms** and choose **Array**.

2 In the **Settings** window for **Array**, locate the **Input** section.

3 From the **Input objects** list, choose **Cylinder 15**.

4 Locate the **Size** section. In the **x size** text field, type 2.

5 In the **y size** text field, type 2.

6 In the **z size** text field, type `3`.

7 Locate the **Displacement** section. In the **x** text field, type `28[m]`.

8 In the **y** text field, type `-28[m]`.

9 In the **z** text field, type `10[m]`.

10 Click **Build Selected**.

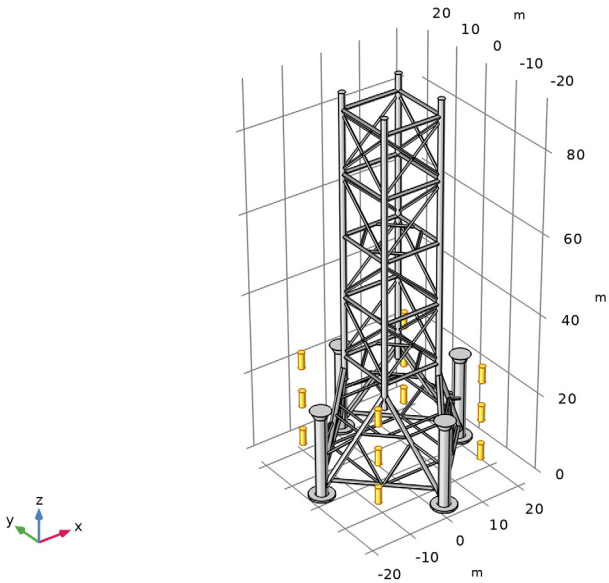

Cylinder 16 (cyl16)

1 In the **Geometry** toolbar, click **Cylinder**.

2 In the **Settings** window for **Cylinder**, locate the **Size and Shape** section.

3 In the **Radius** text field, type `0.8[m]`.

4 In the **Height** text field, type `4[m]`.

5 Locate the **Position** section. In the **x** text field, type `-14[m]`.

6 In the **z** text field, type `21[m]`.

7 Locate the **Selections of Resulting Entities** section. Select the **Resulting objects selection** checkbox.

8 From the **Show in physics** list, choose **Off**.

9 Click **Build Selected**.

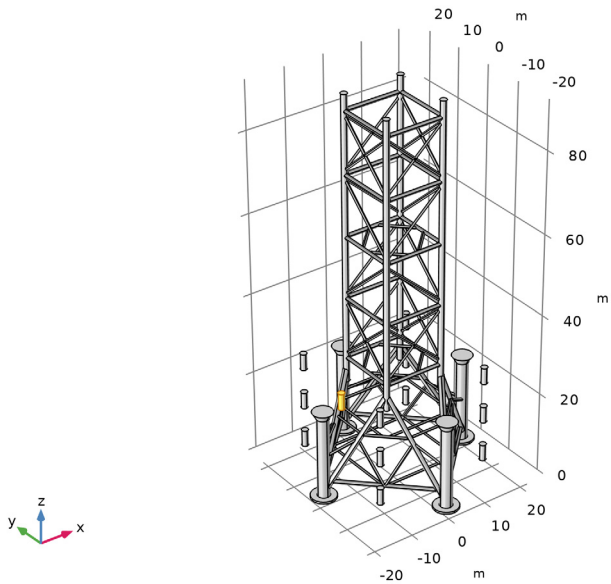

Rotate 10 (rot10)

1 In the **Geometry** toolbar, click **Transforms** and choose **Rotate**.

2 In the **Settings** window for **Rotate**, locate the **Input** section.

3 From the **Input objects** list, choose **Cylinder 16**.

4 Locate the **Rotation** section. In the **Angle** text field, type `range(90[deg],90[deg],360[deg])`.

Array 3 (arr3)

1 In the **Geometry** toolbar, click **Transforms** and choose **Array**.

2 In the **Settings** window for **Array**, locate the **Input** section.

3 From the **Input objects** list, choose **Cylinder 16**.

4 Locate the **Size** section. In the **z size** text field, type `7`.

5 Locate the **Displacement** section. In the **x** text field, type `28[m]`.

6 In the **y** text field, type `-28[m]`.

7 In the **z** text field, type `10[m]`.

8 Locate the **Selections of Resulting Entities** section. Select the **Resulting objects selection** checkbox.

9 From the **Show in physics** list, choose **Off**.

10 Find the **Cumulative selection** subsection. From the **Contribute to** list, choose **Zinc**.

11 Click **Build Selected**.

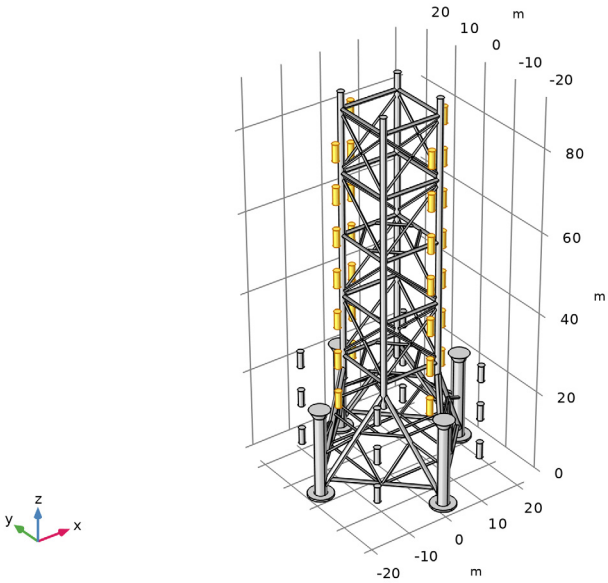

12 Click **Highlight Result**.

All Electrodes

1 In the **Geometry** toolbar, click **Selections** and choose **Union Selection**.

2 In the **Settings** window for **Union Selection**, type `All Electrodes` in the **Label** text field.

3 Locate the **Geometric Entity Level** section. From the **Level** list, choose **Object**.

4 Locate the **Input Entities** section. Click **Add**.

5 In the **Add** dialog, in the **Selections to add** list, choose **Steel** and **Zinc**.

6 Click **OK**.

7 In the **Settings** window for **Union Selection**, locate the **Resulting Selection** section.

8 From the **Show in physics** list, choose **Boundary selection**.

Work Plane 1 (wp1)

In the **Geometry** toolbar, click **Work Plane**.

Work Plane 1 (wp1) > Plane Geometry

In the **Model Builder** window, click **Plane Geometry**.

Work Plane 1 (wp1) > Circle 1 (c1)

1 In the **Work Plane** toolbar, click **Circle**.

2 In the **Settings** window for **Circle**, locate the **Size and Shape** section.

3 In the **Radius** text field, type `50[m]`.

4 In the **Sector angle** text field, type `90[deg]`.

5 Locate the **Rotation Angle** section. In the **Rotation** text field, type `180[deg]`.

Extrude 1 (ext1)

1 In the **Model Builder** window, under **Component 1 (comp1)** > **Geometry 1** right-click **Work Plane 1 (wp1)** and choose **Extrude**.

2 Select the object **wp1** only.

3 In the **Settings** window for **Extrude**, locate the **Distances** section.

4 In the table, enter the following settings:

Distances (m)
`92[m]`

5 Click **Build Selected**.

6 Click the **Zoom Extents** button in the **Graphics** toolbar.

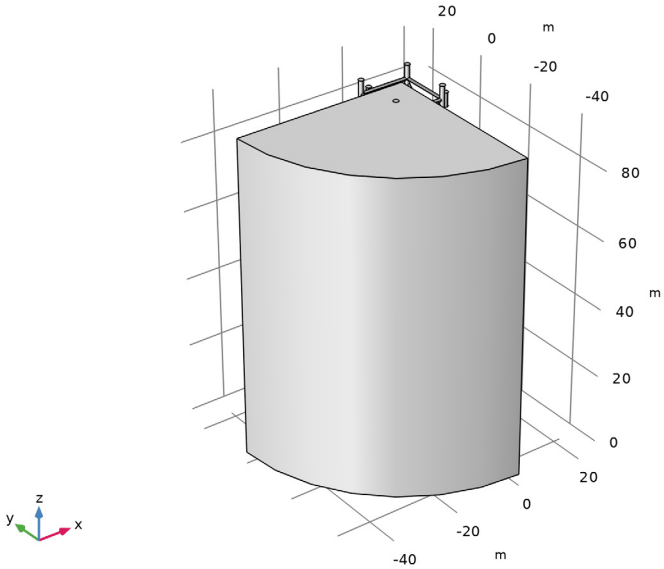

Difference 1 (dif1)

1 In the **Geometry** toolbar, click **Booleans and Partitions** and choose **Difference**.

2 Select the object **ext1** only.

3 In the **Settings** window for **Difference**, locate the **Difference** section.

4 From the **Objects to subtract** list, choose **All Electrodes**.

5 Click **Build Selected**.

6 Click the **Wireframe Rendering** button in the **Graphics** toolbar.

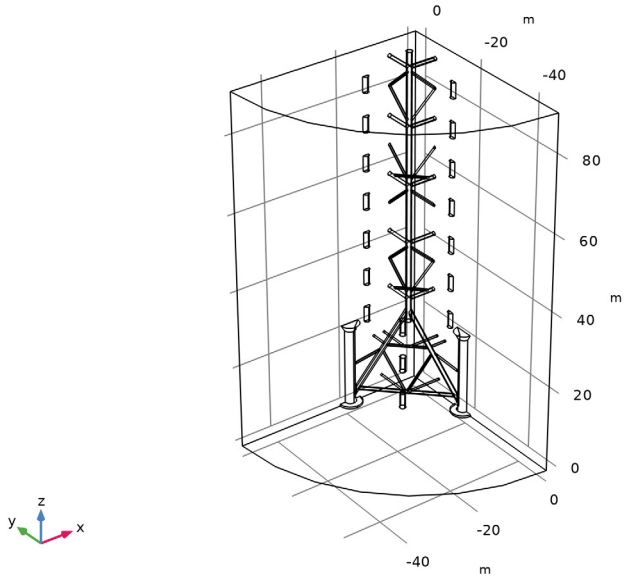

Remove Details 1 (rmd1)

1 In the **Geometry** toolbar, click **Virtual Operations** and choose **Remove Details**.

2 In the **Settings** window for **Remove Details**, click **Build Selected**.