Created in COMSOL Multiphysics 6.3

Submodeling with Plasticity

This model is licensed under the COMSOL Software License Agreement 6.3.
All trademarks are the property of their respective owners. See www.comsol.com/trademarks.

Introduction

Submodeling is a powerful technique for computing accurate local results in large structures. The basic idea is that a small detailed model is analyzed, driven by boundary conditions that are given by the results from a global model.

In this example, it is shown how you can incorporate nonlinearities in a submodel. The source of the nonlinearity is plasticity, but the same approach can be used also for other cases. The only important thing is the fundamental assumption that the properties of the submodel are such that its stiffness does not differ significantly from what is computed from the same volume of material in the global model.

If the material would have an explicit time dependency, as would be the case for creep, then the submodel would have to be analyzed in time domain.

The global model can be either considered as linear or be analyzed under the same nonlinear conditions as the submodel. A nonlinear analysis would provide somewhat better boundary conditions for the submodel, but may be computationally too expensive for a large structure.

This example is an extension of the model *Submodeling Analysis of a Shaft* in the COMSOL Multiphysics Application Library, where the general submodeling technique is discussed in more detail.

Model Definition

The geometry consists of a shaft with a sudden change in diameter. At the location of the diameter change, there is a fillet with a small radius where stress concentrations will appear. There is also a central hole through the shaft. The geometry and mesh are shown in Figure 1.

The shaft is fixed at the thick end. On the thin end, a tensile force of 2500 N and a shear force of 900 N are applied.

The material is steel, with Young's modulus 200 GPa and Poisson's ratio 0.3.

The yield stress is 350 MPa, and a linear hardening with tangent modulus 1.045 GPa is assumed.

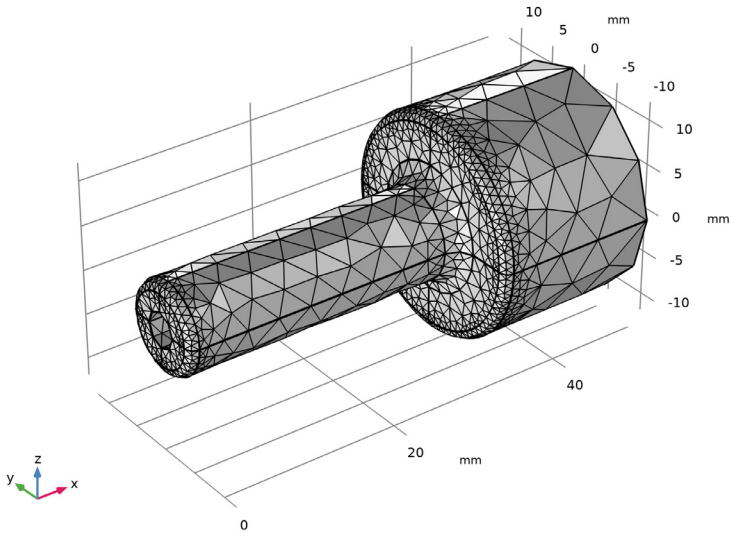

Figure 1: The full model.

As submodel, a region around the fillet at the side giving the highest stress is chosen.

The geometry and mesh of the submodel are shown in Figure 2.

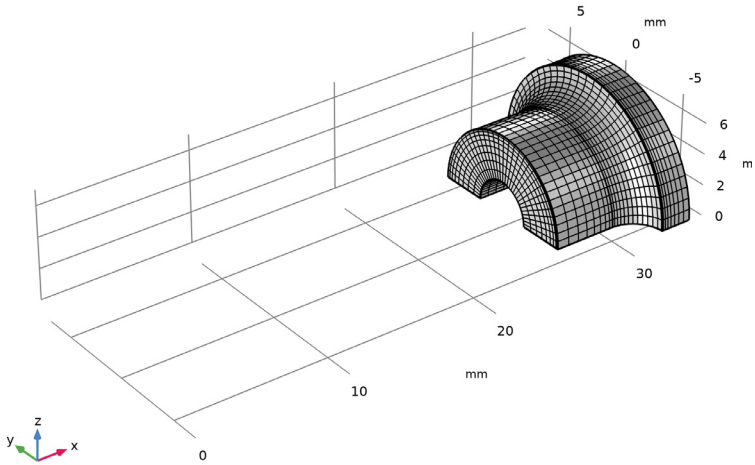

Figure 2: The submodel.

Results and Discussion

In the original linear model, the computed maximum von Mises stress is 466 MPa. This is well above the yield limit of 350 MPa. A plot of the stress contour for the yield limit, Figure 3, shows that the yield stress is exceeded only in a smaller region in the fillet. This indicates that it can be possible to apply the submodeling technique to determine the stress and strain state accurately. Since only a small volume of the material will yield, the stiffness of the component should not be affected too much.

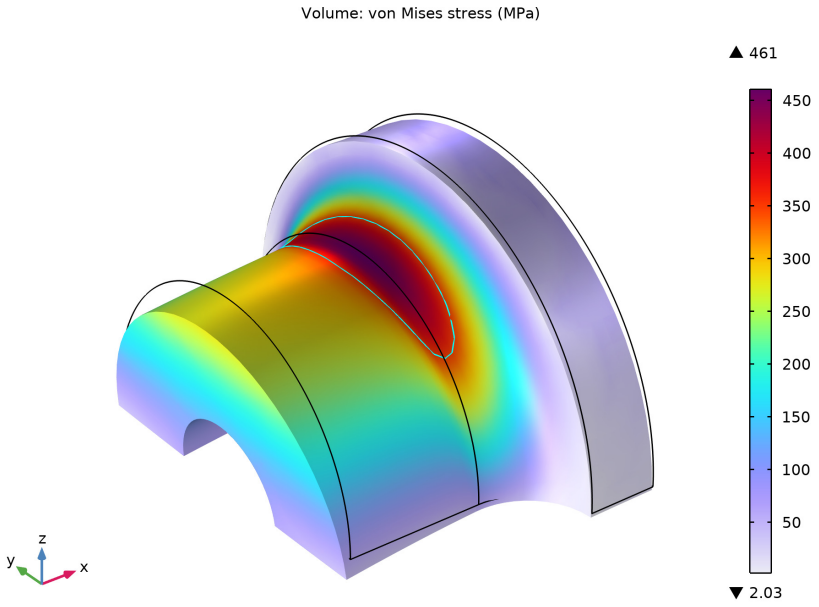

Figure 3: Stress distribution in the linear analysis. The contour shows the yield limit.

In Figure 4, the stress distribution after the full nonlinear analysis is shown. The peak stress is now 351 MPa. There is only a small amount of hardening. In the same figure, the actual size of the plastic region is shown, together with the previous estimate from the nonlinear analysis.

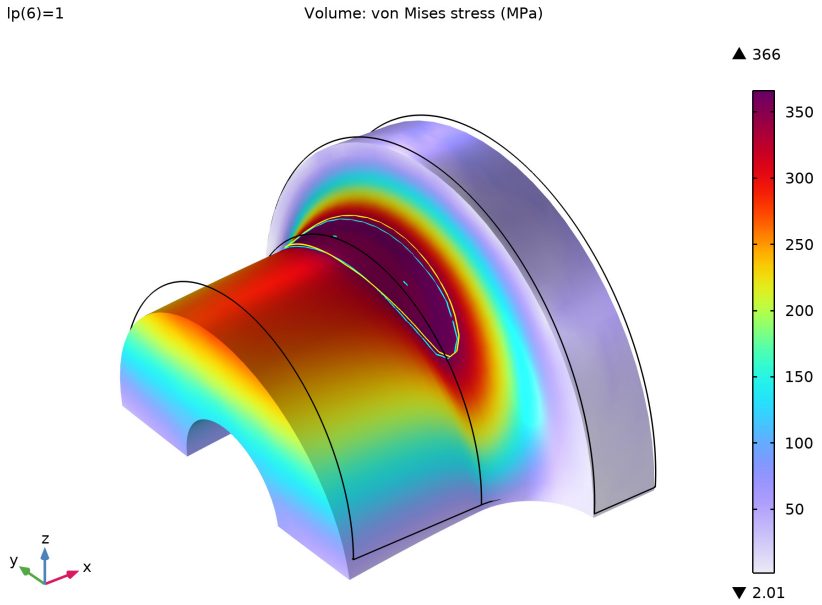

Figure 4: Von Mises equivalent stress at full load in the elastoplastic analysis. The yellow contour shows where the yield stress was exceeded in the elastic analysis while the cyan contour shows the same limit in the elastoplastic analysis.

In Figure 5, the equivalent plastic strain field is shown. As can be seen, the plastic zone does not penetrate very deep from the surface of the fillet. This also serves as a verification of the assumption that the introduction of the elastoplastic material model should not affect the overall stiffness significantly. The maximum plastic strain is about 0.08 %. It should be noted that even with mesh in the submodel, the plasticity is essentially confined to the outermost layer of elements.

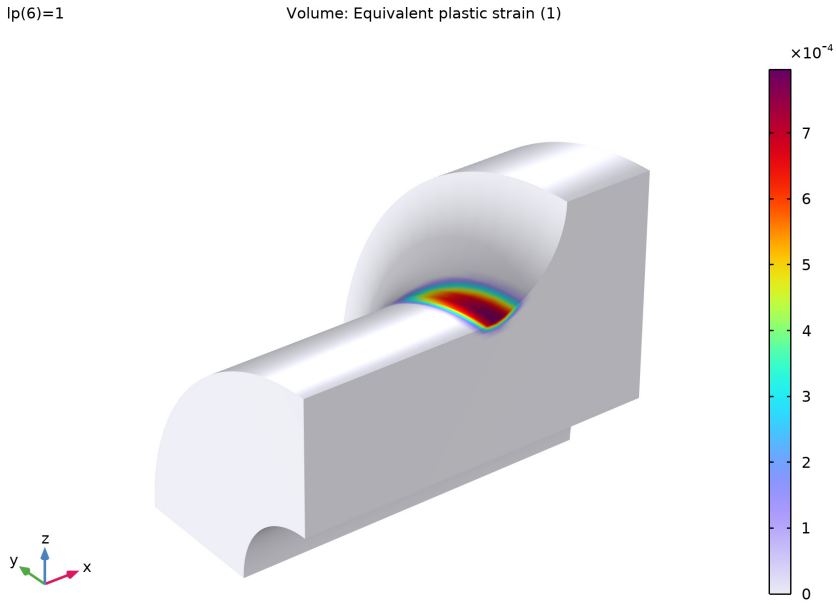

Figure 5: Equivalent plastic strain in the submodel.

As another verification of the validity of the approach is to evaluate the reaction force in the Y-direction for the cut in the thin part of the shaft for all steps in the auxiliary sweep. When normalized by the applied shear load, the value should ideally be constant, and equal to 1. In Figure 6, the result is shown. In the linear regime, the value is 0.990. This can be interpreted as that the submodel actually is 1.0% more compliant than the global model. At full load, the normalized reaction force has decreased to 0.983. The force applied to the submodel is thus about 1.7% too small, which is probably still acceptable.

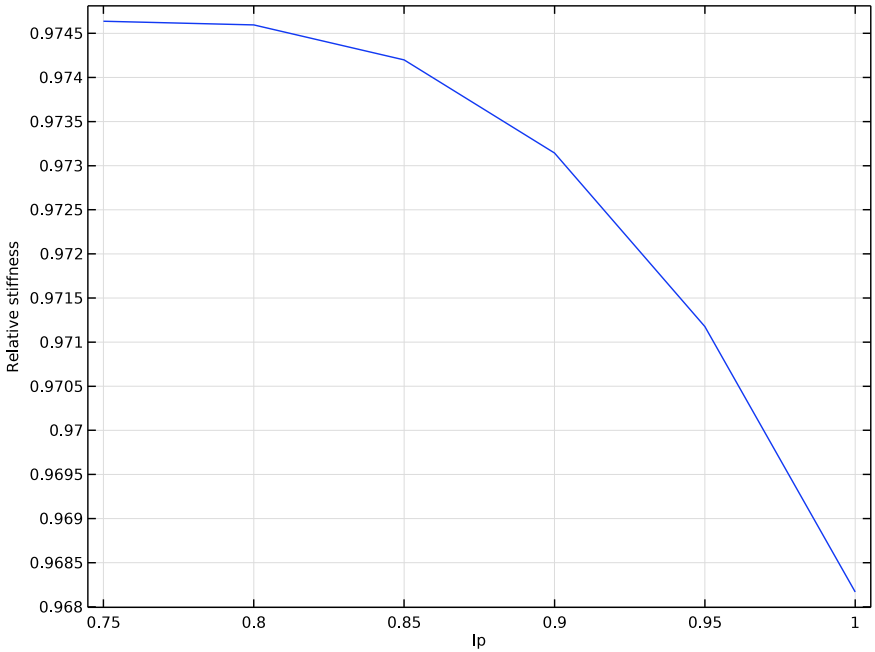

Figure 6: The normalized cut reaction force as function of the load multiplier.

Notes About the COMSOL Implementation

When a study that either contains an auxiliary sweep, or is time dependent, references results from a previous study, it is important that correct values can be retrieved. This means that the same parameter must be used in both studies.

In time domain, the built-in time parameter (`t`) is used. In an auxiliary sweep, you must select the same parameter to represent the loading in both studies. The parameter values that are used can however differ. When values are not matching, the results from the previous study are interpolated. Thus, it is a minimum requirement that the range of the loading parameter in the previous study is at least as large as in the one referencing it.

In this example, the first (full model) study is linear. Still, in order for results to be interpolated, a formal auxiliary sweep with two parameter values is required.

In the settings for the second study step, you need to make the appropriate settings under **Values of variables not solved for**:

- **Settings**: **User Controlled**
- **Method**: **Solution**
- **Study**: The global model study
- **Parameter value**: **Automatic (all solutions)**

If, instead of a linear analysis, you would like to incorporate plasticity also in the global model, you only need to make two changes:

- Add a **Plasticity** node under **Linear Elastic Material** in the global model.
- Change the range of the auxiliary sweep in the **Full Model** study to be, for example `range(0.75,0.05,1)`.

Application Library path: `Nonlinear_Structural_Materials_Module/Plasticity/shaft_submodeling_plasticity`

Modeling Instructions

ROOT

Start by opening the existing linear model.

APPLICATION LIBRARIES

1. From the **File** menu, choose **Application Libraries**.
2. In the **Application Libraries** window, select **COMSOL Multiphysics** > **Structural Mechanics** > **shaft_submodeling** in the tree.
3. Click **Open**.

Add a contour indicating the region where the yield stress is exceeded.

RESULTS

Contour 1

1. In the **Model Builder** window, right-click **Stress - Submodel** and choose **Contour**.
2. In the **Settings** window for **Contour**, locate the **Expression** section.

3 In the **Expression** text field, type `solid2.misesGp/material.ElastoplasticModel.sigmags`.

4 Click to expand the **Title** section. From the **Title type** list, choose **None**.

5 Locate the **Levels** section. From the **Entry method** list, choose **Levels**.

6 In the **Levels** text field, type `1`.

7 Locate the **Coloring and Style** section. Clear the **Color legend** checkbox.

8 From the **Coloring** list, choose **Uniform**.

9 From the **Color** list, choose **Cyan**.

Deformation 1

Right-click **Contour 1** and choose **Deformation**.

Contour 1

1 Click to expand the **Inherit Style** section. Clear the **Color** checkbox.

2 Clear the **Color and data range** checkbox.

3 Clear the **Transparency** checkbox.

4 Clear the **Tube radius scale factor** checkbox.

5 From the **Plot** list, choose **Volume 1**.

6 Click the **Show Grid** button in the **Graphics** toolbar.

7 In the **Stress - Submodel** toolbar, click **Plot**.

8 Click the **Zoom Extents** button in the **Graphics** toolbar.

Add a parameter for scaling the load.

GLOBAL DEFINITIONS

Parameters 1

1 In the **Model Builder** window, under **Global Definitions** click **Parameters 1**.

2 In the **Settings** window for **Parameters**, locate the **Parameters** section.

3 In the table, enter the following settings:

Name	Expression	Value	Description
`lp`	`0`	`0`	`Load multiplier`

FULL MODEL (COMP1)

In the **Model Builder** window, expand the **Full Model (comp1)** node.

SOLID MECHANICS (SOLID)

Boundary Load 1

1 In the **Model Builder** window, expand the **Full Model (comp1)** > **Solid Mechanics (solid)** node, then click **Boundary Load 1**.

2 In the **Settings** window for **Boundary Load**, locate the **Force** section.

3 Specify the $\mathbf{F}_{\text{tot}}$ vector as

-2.5[kN]*lp	x
0	y
-0.9[kN]*lp	z

Formally, the linear global model study must also contain an auxiliary sweep. The values of the sweep parameter are not important, as long as the range that will be used in the submodel is covered.

FULL MODEL

Step 1: Stationary

1 In the **Model Builder** window, expand the **Full Model** node, then click **Step 1: Stationary**.

2 In the **Settings** window for **Stationary**, click to expand the **Study Extensions** section.

3 Select the **Auxiliary sweep** checkbox.

4 Click + **Add**.

5 In the table, enter the following settings:

Parameter name	Parameter value list	Parameter unit
lp (Load multiplier)	0 1	

6 In the **Study** toolbar, click = **Compute**.

RESULTS

Stress - Full Model

Add plasticity to the submodel.

SUBMODEL (COMP2)

In the **Model Builder** window, expand the **Submodel (comp2)** node.

SOLID MECHANICS 2 (SOLID2)

Linear Elastic Material 1

In the **Model Builder** window, expand the **Submodel (comp2)** > **Solid Mechanics 2 (solid2)** node, then click **Linear Elastic Material 1**.

Plasticity 1

In the **Physics** toolbar, click **Attributes** and choose **Plasticity**.

Add an auxiliary sweep, where the first load level is still in the linear regime. In this case, this is 75% of the full load.

SUBMODEL

Step 1: Stationary

1 In the **Model Builder** window, expand the **Submodel** node, then click **Step 1: Stationary**.

2 In the **Settings** window for **Stationary**, locate the **Study Extensions** section.

3 Select the **Auxiliary sweep** checkbox.

4 Click **Add**.

5 In the table, enter the following settings:

Parameter name	Parameter value list	Parameter unit
lp (Load multiplier)	`range(0.75,0.05,1)`	

6 Click to expand the **Values of Dependent Variables** section. Find the **Values of variables not solved for** subsection. From the **Parameter value (lp)** list, choose **Automatic (all solutions)**.

7 In the **Study** toolbar, click **Compute**.

Compare the calculated plastic region with the one estimated from the elastic results.

RESULTS

Contour 2

1 In the **Model Builder** window, under **Results** > **Stress - Submodel** right-click **Contour 1** and choose **Duplicate**.

2 In the **Settings** window for **Contour**, locate the **Data** section.

3 From the **Dataset** list, choose **Submodel/Solution 2 (3) (sol2)**.

4 From the **Parameter value (lp)** list, choose **0.75**.

5 Locate the **Expression** section. In the **Expression** text field, type `solid2.misesGp/material.ElastoplasticModel.sigmags/0.75`.

6 Locate the **Coloring and Style** section. From the **Color** list, choose **Yellow**.

7 In the **Stress - Submodel** toolbar, click **Plot**.

Plastic Strain

1 In the **Results** toolbar, click **3D Plot Group**.

2 In the **Settings** window for **3D Plot Group**, type `Plastic Strain` in the **Label** text field.

3 Locate the **Data** section. From the **Dataset** list, choose **Submodel/Solution 2 (3) (sol2)**.

4 Click **Plot Last**.

Volume 1

1 Right-click **Plastic Strain** and choose **Volume**.

2 In the **Settings** window for **Volume**, locate the **Expression** section.

3 In the **Expression** text field, type `solid2.epeGp`.

4 Locate the **Coloring and Style** section. From the **Color table** list, choose **Prism**.

Filter 1

1 Right-click **Volume 1** and choose **Filter**.

2 In the **Settings** window for **Filter**, locate the **Element Selection** section.

3 In the **Logical expression for inclusion** text field, type `Y>-0.0001`.

4 From the **Element nodes to fulfill expression** list, choose **All**.

Plastic Strain

1 In the **Model Builder** window, under **Results** click **Plastic Strain**.

2 In the **Settings** window for **3D Plot Group**, locate the **Plot Settings** section.

3 Clear the **Plot dataset edges** checkbox.

Volume 1

1 Click the **Zoom Extents** button in the **Graphics** toolbar.

2 In the **Model Builder** window, click **Volume 1**.

3 In the **Plastic Strain** toolbar, click **Plot**.

Evaluate the reaction shear force at the cut in the thinner part in order to estimate the effect of the nonlinearity. Normalize by the applied load, and take the symmetry into account.

Surface Integration 1

1 In the **Results** toolbar, click **More Derived Values** and choose **Integration** > **Surface Integration**.

2 In the **Settings** window for **Surface Integration**, locate the **Data** section.

3 From the **Dataset** list, choose **Submodel/Solution 2 (3) (sol2)**.

4 Select Boundary 1 only.

5 Locate the **Expressions** section. In the table, enter the following settings:

Expression	Unit	Description
`-solid2.RFz/0.9[kN]/lp*2`	1	

6 Click **Evaluate**.

TABLE 1

1 Go to the **Table 1** window.

2 Click the **Table Graph** button in the window toolbar.

RESULTS

Error Estimate

1 In the **Model Builder** window, under **Results** click **1D Plot Group 7**.

2 In the **Settings** window for **1D Plot Group**, type `Error Estimate` in the **Label** text field.

3 Locate the **Plot Settings** section.

4 Select the **y-axis label** checkbox. In the associated text field, type `Relative stiffness`.

5 In the **Error Estimate** toolbar, click **Plot**.

6 Click **Plot**.