

Electrical Heating in a Busbar Assembly

This model is licensed under the COMSOL Software License Agreement 6.3.
All trademarks are the property of their respective owners. See www.comsol.com/trademarks.

Introduction

This tutorial analyzes the anode to busbar coupling designed to conduct a direct current from a current source to the anode in an electrolysis process, such as the chlor alkali process for the production of chlorine and sodium. The current that passes from the intercell busbar to the anode produces heat due to the resistive losses, a phenomenon referred to as Joule heating. The Joule heating effect is described by conservation laws for electric current and energy. Once solved for, the two conservation laws give the temperature and electric field, respectively.

The geometry for the simulation, displayed in Figure 1, includes the coupling components for one cell, and a section of the intercell busbar that is connected to the power source. It consists of the top of the anode with four central columns holding copper rods attached to copper bars.

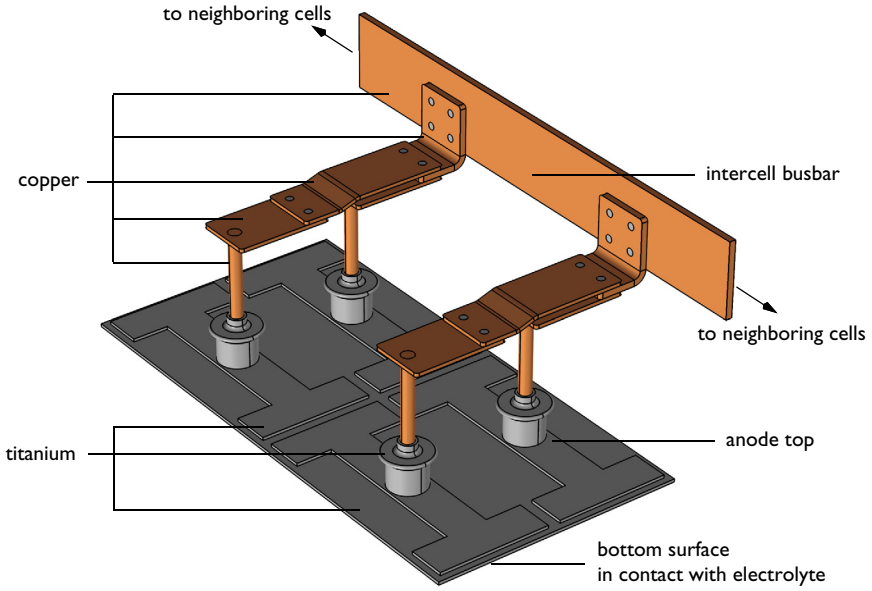

Figure 1: The geometry of the anode to busbar coupling used in this example.

When designing the coupling to the busbar it is important to aim for a low operational temperature for the copper components to avoid excessive oxidation and to maintain a high electrical conductivity. The goal of your simulation is to precisely calculate how much the busbar heats up, and to study the influence of two design parameters, the diameter of the rods rising from the top of the anode and the width of the copper connectors that link

to the intercell busbar, on the phenomenon. By conducting a parametric sweep you can determine which combinations of these parameters result in a maximum temperature in the copper components should preferably be less than 90°C. Above this temperature the oxidation rate of copper starts to increase.

Model Definition

The intercell busbar, the various connector bars, and the rods rising from the anode are made of copper. For the components of the anode and the bolts that hold the copper busbars together, choose titanium assuming a highly corrosive environment.

All surfaces, except the anode bottom surface in contact with the electrolyte and the grounded surfaces of the intercell busbar, are cooled by natural convection in the air surrounding the busbar. Use the convective heat flux boundary condition for the purpose, assuming a cell room temperature of to 35°C. The same boundary condition is applied at the bottom surface of the anode, where the temperature of the surrounding electrolyte is set to 100°C. The intercell busbar cross section boundaries do not contribute to cooling or heating of the device. The electric potential at these boundaries is 0 V. At the bottom surface of the anode the normal current density is set to 8000 A/m^2.

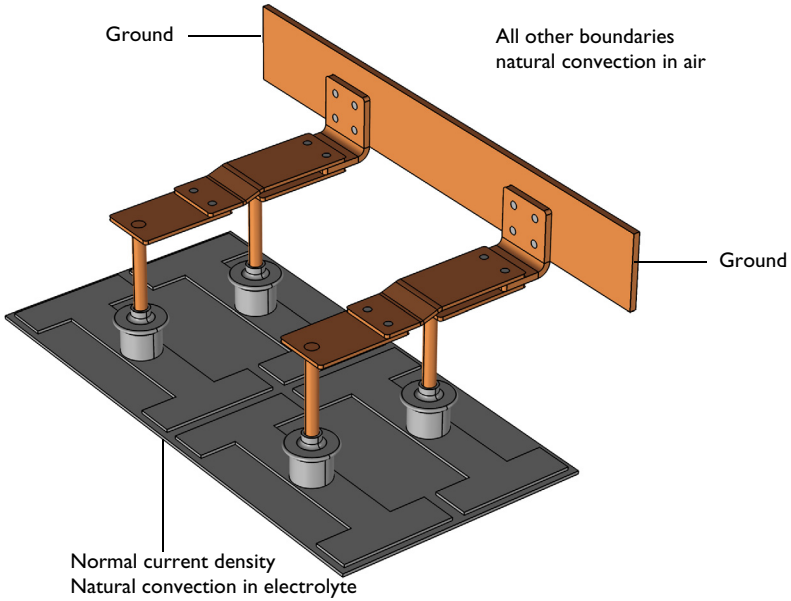

Figure 2: Boundary settings in the model.

Results and Discussion

The plot shown in Figure 3 displays the temperature in the device, which is substantially higher than the ambient temperature of 35°C. The highest temperature is experienced by the titanium parts in contact with the hot electrolyte. For the copper components, the temperature variation is largest in the copper rods.

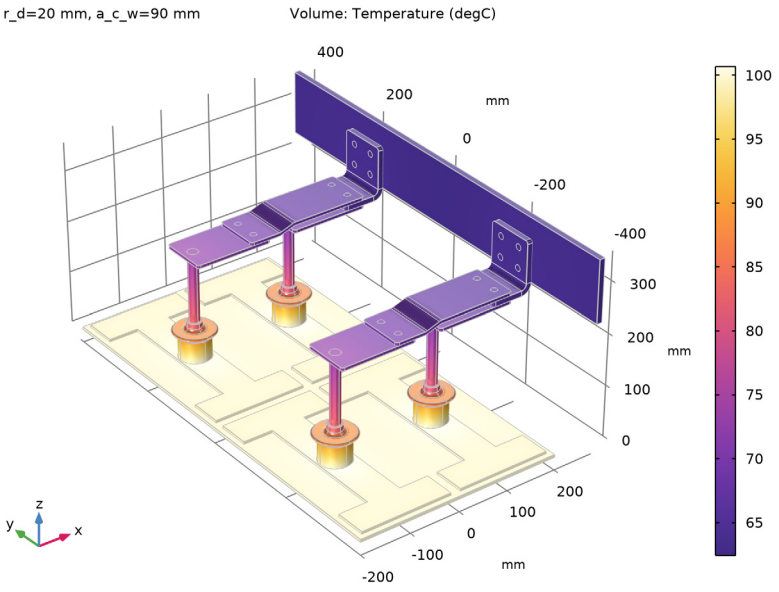

Figure 3: Temperature distribution in the busbar.

The temperature distribution is symmetric with a vertical mirror plane running through the anode at a right angle to the intercell busbar. In this case, the model does not require much computing power and you can model the whole geometry. For more complex models, you should consider using symmetries in order to reduce the size of the model.

Increasing the diameter of the copper rod and the width of the connector rods, while keeping the applied current density constant, leads to a lower temperature in the device. While the increased cross-sectional area leads to more heat produced by resistive losses, there is an even larger increase in the cooling effect as the total surface area increases, resulting in the lowering of the temperature.

By plotting the maximum temperature in the copper components against the diameter and width parameters, and formatting the plot according to Figure 4, you can easily determine

the combinations of the diameter and width parameters that lead to an acceptable value of the maximum temperature.

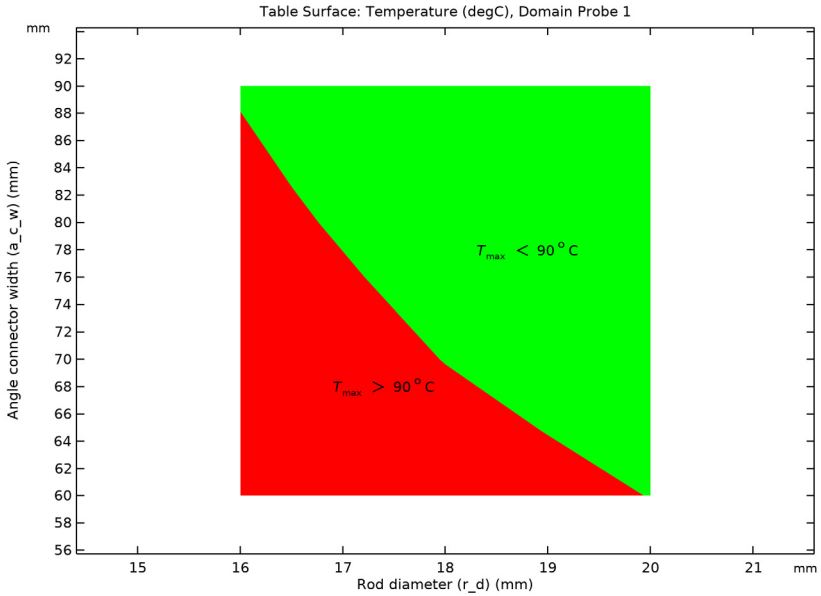

Figure 4: Maximum temperature in the busbar assembly plotted against the rod diameter and the connector width parameters, and formatted to show the parameter combinations that lead to a maximum temperature of less than 90°C.

Application Library path: `COMSOL_Multiphysics/Multiphysics/busbar_assembly`

Modeling Instructions

COMSOL DESKTOP

From the **File** menu, choose **New**.

NEW

In the **New** window, click **Model Wizard**.

MODEL WIZARD

1 In the **Model Wizard** window, click **3D**.

2 In the **Select Physics** tree, select **Heat Transfer** > **Electromagnetic Heating** > **Joule Heating**.

3 Click **Add**.

4 Click **Study**.

5 In the **Select Study** tree, select **General Studies** > **Stationary**.

6 Click **Done**.

GEOMETRY 1

The geometry sequence for this model is inserted to focus on the physics setup and the parametric sweep. This also inserts the parameters required for creating the geometry.

1 In the **Geometry** toolbar, click **Insert Sequence** and choose **Insert Sequence**.

2 Browse to the model's Application Libraries folder and double-click the file `busbar_assembly_geom_sequence.mph`.

3 In the **Insert Sequence** dialog, select **Geometry 1** in the **Select geometry sequence to insert** list.

4 Click **OK** to insert the finalized geometry.

5 In the **Geometry** toolbar, click **Build All**.

6 In the **Model Builder** window, under **Component 1 (comp1)** click **Geometry 1**.

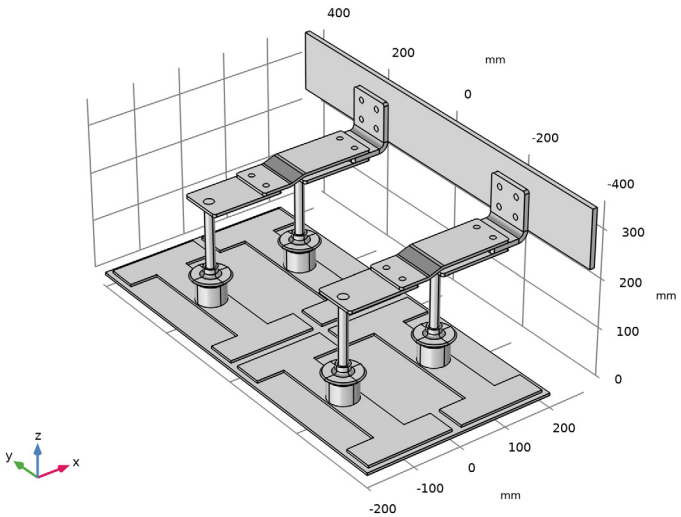

The inserted geometry sequence is created using geometry parts. In another version of the busbar the geometry sequence is instead structured by group nodes. Both busbar versions contain the same selections and parameters, but illustrate different ways of

creating the geometry. To insert the alternative geometry sequence, browse to *COMSOL Multiphysics/Multiphysics/busbar_assembly_groups_geom_sequence.mph*.

3D geometries are automatically analyzed for small details and artifacts when leaving the geometry. Leave the geometry sequence to activate **Geometry Cleanup**.

MESH 1

1 In the **Model Builder** window, click **Mesh 1**.

2 In the **Geometry Cleanup** dialog that opens, click **Clean up Automatically** to automatically clean up the geometry.

GLOBAL DEFINITIONS

Parameters 1

Global parameters in a model allow you to parameterize settings and can be controlled by the parametric solver to perform parametric sweeps.

Continue with loading additional parameters for setting up the physics.

1 In the **Model Builder** window, under **Global Definitions** click **Parameters 1**.

2 In the **Settings** window for **Parameters**, locate the **Parameters** section.

3 Click **Load from File**.

4 Browse to the model's Application Libraries folder and double-click the file `busbar_assembly_parameters.txt`.

ADD MATERIAL

1 In the **Materials** toolbar, click **Add Material** to open the **Add Material** window.

2 Go to the **Add Material** window.

3 In the tree, select **Built-in** > **Copper**.

4 Click the **Add to Component** button in the window toolbar.

MATERIALS

Copper (mat1)

1 In the **Settings** window for **Material**, locate the **Geometric Entity Selection** section.

2 From the **Selection** list, choose **Copper**.

ADD MATERIAL

1 Go to the **Add Material** window.

2 In the tree, select **Built-in** > **Titanium beta-21S**.

3 Click the **Add to Component** button in the window toolbar.

4 In the **Materials** toolbar, click **Add Material** to close the **Add Material** window.

MATERIALS

Titanium beta-21S (mat2)

1 In the **Settings** window for **Material**, locate the **Geometric Entity Selection** section.

2 From the **Selection** list, choose **Titanium**.

ELECTRIC CURRENTS (EC)

Ground 1

1 In the **Physics** toolbar, click **Boundaries** and choose **Ground**.

2 In the **Settings** window for **Ground**, locate the **Boundary Selection** section.

3 From the **Selection** list, choose **Grounded Boundary (Intercell Busbar 1)**.

Normal Current Density 1

1 In the **Physics** toolbar, click **Boundaries** and choose **Normal Current Density**.

2 In the **Settings** window for **Normal Current Density**, locate the **Boundary Selection** section.

3 From the **Selection** list, choose **Electrolyte Boundary (Cell Grid Top 1)**.

4 Locate the **Normal Current Density** section. In the J_n text field, type `Jan`.

HEAT TRANSFER IN SOLIDS (HT)

Heat Flux 1

1 In the **Physics** toolbar, click **Boundaries** and choose **Heat Flux**.

2 In the **Settings** window for **Heat Flux**, locate the **Boundary Selection** section.

3 From the **Selection** list, choose **Heat Flux Boundaries**.

4 Locate the **Heat Flux** section. From the **Flux type** list, choose **Convective heat flux**.

5 In the h text field, type `htca`.

6 In the T_{ext} text field, type `Ta`.

Heat Flux 2

1 In the **Physics** toolbar, click **Boundaries** and choose **Heat Flux**.

2 In the **Settings** window for **Heat Flux**, locate the **Boundary Selection** section.

3 From the **Selection** list, choose **Electrolyte Boundary (Cell Grid Top 1)**.

4 Locate the **Heat Flux** section. From the **Flux type** list, choose **Convective heat flux**.

5 In the h text field, type `htce`.

6 In the T_{ext} text field, type `Te`.

MESH 1

1 In the **Model Builder** window, under **Component 1 (comp1)** click **Mesh 1**.

2 In the **Settings** window for **Mesh**, locate the **Physics-Controlled Mesh** section.

3 In the table, select the **Use** checkbox for **Geometric Analysis, Detail Size**.

4 Click **Build All**.

STUDY 1

Parametric Sweep

1 In the **Study** toolbar, click **Parametric Sweep**.

2 In the **Settings** window for **Parametric Sweep**, locate the **Study Settings** section.

3 Click **Add**.

4 From the list in the **Parameter name** column, choose the rod diameter **r_d**.

5 Click **Range**.

6 In the **Range** dialog, type `16[mm]` in the **Start** text field.

7 In the **Step** text field, type `2[mm]`.

8 In the **Stop** text field, type `20[mm]`.

9 Click **Replace**.

10 In the **Parameter unit** column, enter `mm`.

11 In the **Settings** window for **Parametric Sweep**, locate the **Study Settings** section.

12 Click **Add**.

13 From the list in the **Parameter name** column, choose the width of the angle connector **a_c_w**.

14 Click **Range**.

15 In the **Range** dialog, type `60[mm]` in the **Start** text field.

16 In the **Step** text field, type `10[mm]`.

17 In the **Stop** text field, type `90[mm]`.

18 Click **Replace**.

19 In the **Parameter unit** column, enter `mm`.

As the last step before computing the solution, configure the sweep to include all combinations of the two parameters.

20 In the **Settings** window for **Parametric Sweep**, locate the **Study Settings** section.

21 From the **Sweep type** list, choose **All combinations**.

Solution 1 (sol1)

1 In the **Study** toolbar, click **Show Default Solver**.

2 In the **Model Builder** window, expand the **Solution 1 (sol1)** node.

3 In the **Model Builder** window, expand the **Study 1** > **Solver Configurations** > **Solution 1 (sol1)** > **Stationary Solver 1** node, then click **Segregated 1**.

4 In the **Settings** window for **Segregated**, locate the **General** section.

5 From the **Stabilization and acceleration** list, choose **Anderson acceleration**.

6 In the **Study** toolbar, click **Compute**.

RESULTS

Temperature (ht)

1 In the **Model Builder** window, under **Results** click **Temperature (ht)**.

2 In the **Settings** window for **3D Plot Group**, locate the **Plot Settings** section.

3 From the **Color** list, choose **Gray**.

Volume 1

1 In the **Model Builder** window, expand the **Temperature (ht)** node, then click **Volume 1**.

2 In the **Settings** window for **Volume**, locate the **Expression** section.

3 In the **Unit** field, type `degC`.

4 Locate the **Coloring and Style** section. From the **Color table** list, choose **HeatCameraLight**.

5 In the **Temperature (ht)** toolbar, click **Plot**.

6 You should now see a plot similar to the one in Figure 3.

DEFINITIONS

Add a domain probe to calculate the average temperature increase from ambient temperature in the device.

Domain Probe 1 (dom1)

1 In the **Definitions** toolbar, click **Probes** and choose **Domain Probe**.

2 In the **Settings** window for **Domain Probe**, locate the **Probe Type** section.

3 From the **Type** list, choose **Maximum**.

4 Locate the **Source Selection** section. From the **Selection** list, choose **Copper**.

5 Click **Replace Expression** in the upper-right corner of the **Expression** section. From the menu, choose **Component 1 (comp1)** > **Heat Transfer in Solids** > **Temperature** > **T - Temperature - K**.

6 Locate the **Expression** section. In the **Table and plot unit** field, type `degC`.

7 Click **Update Results**.

PROBE TABLE 1

1 Go to the **Probe Table 1** window.

2 Click the **Table Surface** button in the window toolbar.

A plot similar to the one displayed below appears.

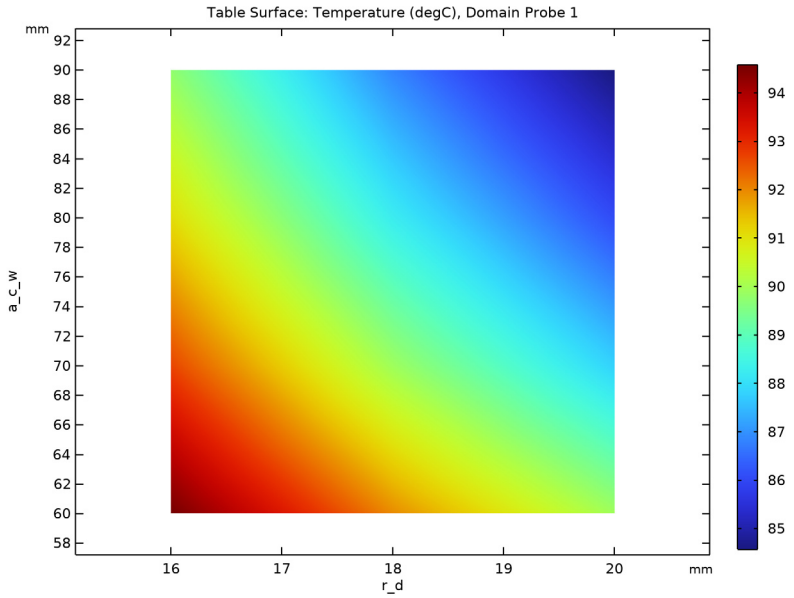

RESULTS

In the last few steps you can add annotations and format the plot to make it easier to read which parameter combinations result in an accepted temperature increase.

Table Surface 2

1 Right-click **Results** > **2D Plot Group 5** > **Table Surface 1** and choose **Duplicate**.

2 In the **Settings** window for **Table Surface**, click to expand the **Title** section.

3 From the **Title type** list, choose **None**.

4 Click to expand the **Range** section. Select the **Manual data range** checkbox.

5 In the **Maximum** text field, type `90`.

6 Locate the **Coloring and Style** section. From the **Coloring** list, choose **Uniform**.

7 From the **Color** list, choose **Green**.

Table Surface 1

1 In the **Model Builder** window, click **Table Surface 1**.

2 In the **Settings** window for **Table Surface**, locate the **Range** section.

3 Select the **Manual data range** checkbox.

4 In the **Minimum** text field, type `90`.

5 Locate the **Coloring and Style** section. From the **Coloring** list, choose **Uniform**.

2D Plot Group 5

1 In the **Model Builder** window, click **2D Plot Group 5**.

2 In the **Settings** window for **2D Plot Group**, locate the **Plot Settings** section.

3 Select the **x-axis label** checkbox. In the associated text field, type `Rod diameter (r_d) (mm)`.

4 Select the **y-axis label** checkbox. In the associated text field, type `Angle connector width (a_c_w) (mm)`.

Annotation 1

1 Right-click **2D Plot Group 5** and choose **Annotation**.

2 In the **Settings** window for **Annotation**, locate the **Data** section.

3 From the **Dataset** list, choose **Domain Probe 1**.

4 Locate the **Annotation** section. In the **Text** text field, type `$T_\max\ >\ 90 \degree \mathrm{C}$`.

5 Locate the **Position** section. In the **x** text field, type `16.8[mm]`.

6 In the **y** text field, type `69[mm]`.

7 Locate the **Annotation** section. Select the **LaTeX markup** checkbox.

8 Locate the **Coloring and Style** section. Clear the **Show point** checkbox.

Annotation 2

1 Right-click **2D Plot Group 5** and choose **Annotation**.

2 In the **Settings** window for **Annotation**, locate the **Data** section.

3 From the **Dataset** list, choose **Domain Probe 1**.

4 Locate the **Annotation** section. In the **Text** text field, type `$T_\max\ <\ 90 \degree \mathrm{C}$`.

5 Locate the **Position** section. In the **x** text field, type `18.2[mm]`.

6 In the **y** text field, type `79[mm]`.

7 Locate the **Annotation** section. Select the **LaTeX markup** checkbox.

8 Locate the **Coloring and Style** section. Clear the **Show point** checkbox.

9 In the **2D Plot Group 5** toolbar, click **Plot**.

The plot in the **Graphics** window should now look similar to the one in Figure 4.