

Gear Shifting in a Sequential Gearbox

This model is licensed under the COMSOL Software License Agreement 6.3.
All trademarks are the property of their respective owners. See www.comsol.com/trademarks.

Introduction

The power transmission system in an automotive application is used to transfer power from the engine to the wheels. Transmission systems with a sequential gearbox are common in motorcycles and racing cars. The main feature of a sequential transmission is that the gear shifting occurs in a sequential manner, without skipping intermediate gears. To achieve this, a rotating cylinder with specially designed grooves is used in a sequential gearbox. The motion of the rotating cylinder is controlled by the shifting pedal.

This example illustrates the modeling of a 4-speed sequential gearbox of a manual transmission vehicle. The shifter drum in this model is a cam with two grooves of a specific profile carved around its circumference. As the drum rotates, the grooves on the drum guide a set of shift forks which, in turn, helps in engaging the required gear. A transient multibody analysis is performed to simulate the gear-shifting mechanism and to compute the angular velocities of all the gears for a specific engine speed.

Model Definition

The geometry of the sequential gearbox is shown in Figure 1. Only the parts of the gearbox that are relevant from a physics point of view are considered in the analysis.

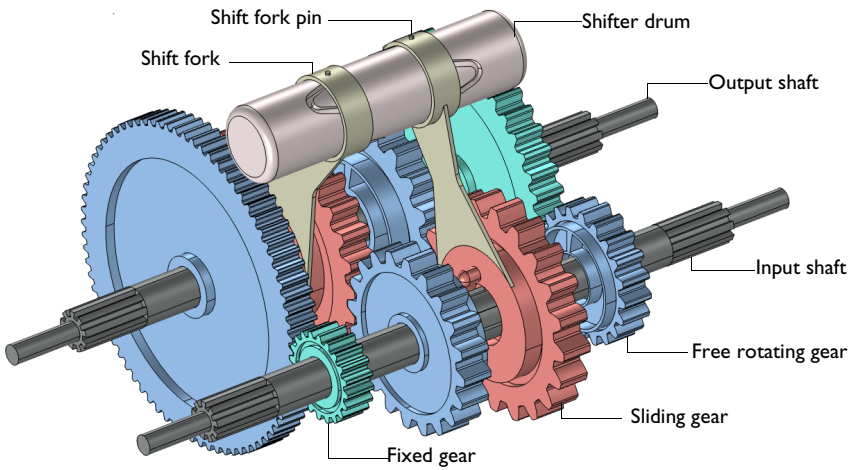

Figure 1: Geometry of the sequential gearbox.

The gear arrangement in the gearbox is shown below in Figure 2.

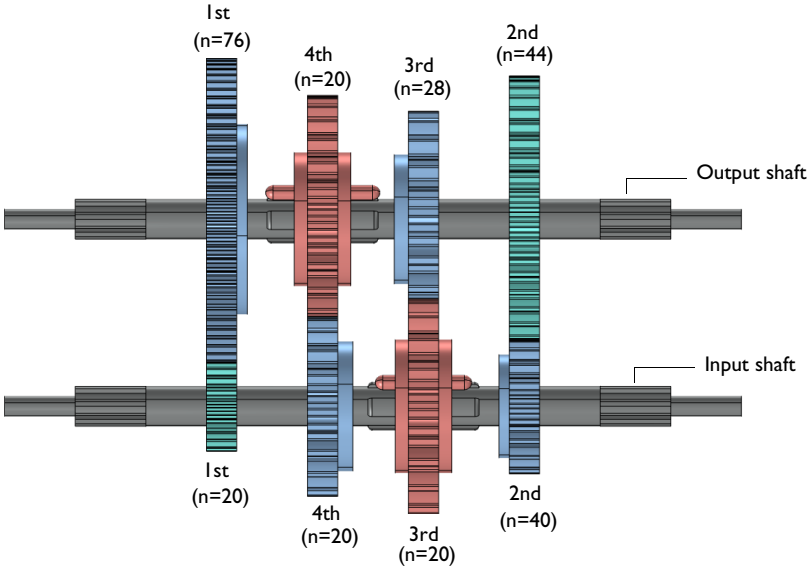

Figure 2: Gear arrangement in the 4-speed sequential gearbox.

The gearbox has its input (driver) shaft coupled to the output (driven) shaft with a series of spur gears. The multibody analysis is performed in the time domain to show four gear upshifts for one revolution of the shifter drum.

The main parts of the gearbox are as follows:

Shafts

Both driver and driven shafts are assumed rigid. The driver shaft, which is connected to the engine, rotates at a specified speed. The driven shaft is coupled to the driver shaft through four gear pairs, and it provides power to the final drive.

Gears

The 4-speed manual transmission is composed of eight spur gears. All the gears are assumed rigid with a rigid mesh. The number of teeth of each gear is given in Figure 2. The pressure angle is 25° for all the gears.

Depending on the allowable relative motion between the gears and the connected shafts, the gears in the sequential gearbox can be classified into the following three types:

- Fixed Gears: These are the gears which are fixed to the driver or driven shaft and hence move at the same speed as the shaft.

- Free Rotating Gears: These gears can only rotate freely about the shafts, but not move along the shafts. These gears have slots on their sides to help in gear shifting.
- Sliding Gears: These gears can only move laterally along the shaft. The teeth on the inner side of these gears fit to the external splines on the shafts, and thus prevent free rotation about the shafts. Each sliding gear has one pin connected to it, which locks with the slot of the adjacent free rotating gear during gear shifting.

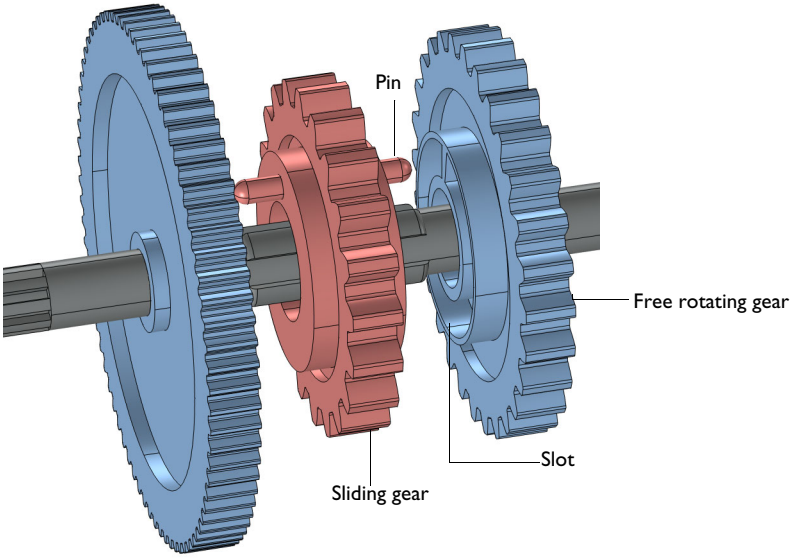

Figure 3: Enlarged view of gears with pin and slot arrangement.

Shifter Drum

This is a cylindrical cam with two channels or grooves of special profiles cut on its circumference.

Shift Fork with Pin

Two shift forks are used to produce the lateral movement of the sliding gear. One end of the shift fork is connected to a pin which is inserted in the groove of the shifter drum. At the other end, the shift fork is connected to the sliding gear.

Gear Shifting Mechanism

In the neutral position, each free rotating gear is paired with a sliding or fixed gear which is locked with the shaft. Hence, no power would be transmitted to the driven shaft at neutral position.

To shift the gear, the rider pushes the shift pedal or shift lever. A ratchet mechanism (which is not modeled here) converts the kicking motion of the shift pedal into the rotation of the shifter drum in specific angles. As the shifter drum rotates, the shift fork pins, guided by the grooves of the drum, also move, which in turn causes the lateral motion of the sliding gear. As the sliding gear moves, the side pin attached to it engages with the slot of the adjacent free rotating gear and temporarily locks it. This leads to the rotation of the driven shaft.

The arrangement of the grooves on the cam is the key aspect of this mechanism, which allows the gears to engage only successively during both upshifting and downshifting.

Constraints and Loads

The input end of the drive shaft, which is connected to the engine, rotates with a speed of 80 rad/s. A resisting torque of 0.1 Nm is applied to the driven shaft after the first gear is engaged.

To initiate the upshifting of gears starting from the neutral position, an angular velocity of 15 rad/s is applied to the shifter drum for a short duration. As the slider gear moves and locks with the neighboring free rotating gear, the rotation of the drum is stopped. This correspond to the first gear engaged in position. The gears are held in this position for some duration. To release the gear from the engaged position, the cam is again rotated. As the cam moves, the shift fork moves backward and thus releases the engaged gears. Similar steps are followed to engage successive gears also. In this example, to model the rotation of the cam at gear shifting intervals, a piecewise function is used, whose value is specified at gear shifting intervals and otherwise taken as zero.

To model the motion of the shift fork pins guided by the shifter drum grooves, **Cam-Follower** nodes in the Multibody Dynamics interface are used. The contact between the slider gear pins and slots are modeled using the **Rigid Body Contact** nodes.

A time-dependent study is run to simulate 4 sequential gear upshiftings, starting from the neutral position.

Results and Discussion

Figure 4 shows the displacement of various components of the gearbox when the first gear is engaged.

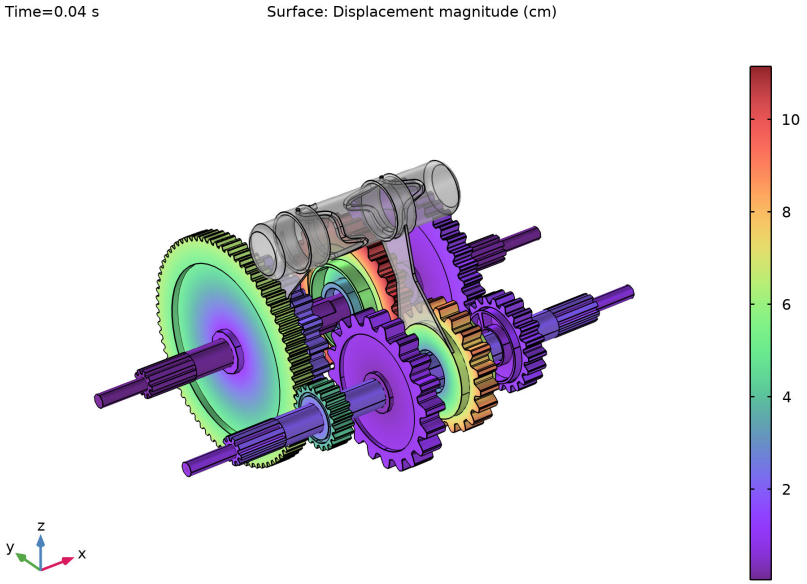

Figure 4: Displacement of different components of the gearbox when the first gear is engaged.

Figure 5, Figure 6, Figure 7, and Figure 8 show, respectively, the position of gears in the gearbox when first, second, third, and fourth gears are engaged sequentially. Here, each color is representative of the gear types explained earlier. Gear engagement occurs in the order neutral-1-2-3-4. When a sliding gear is locked into the slots of the neighboring free-wheeling gear, it corresponds to an engaged state. When a gear retracts after an engaged state, it goes back to the neutral position before engaging with a free-wheeling gear on the other side. Hence, there is a neutral position between each of the engaged positions.

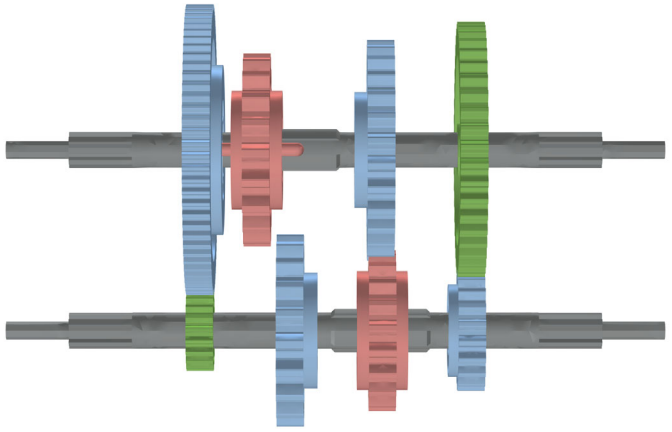

Figure 5: Gear arrangement when the first gear is engaged.

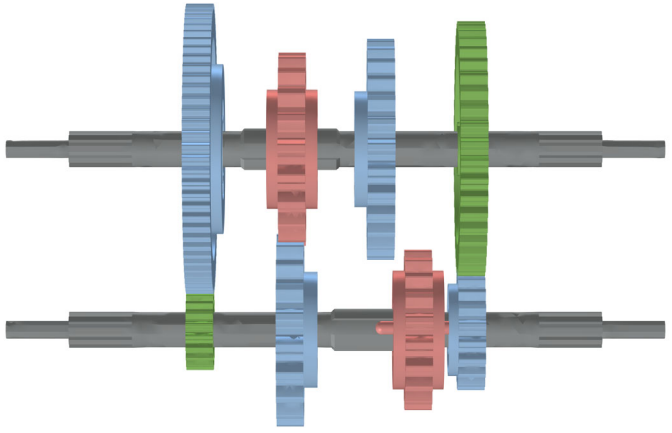

Figure 6: Gear arrangement when the second gear is engaged.

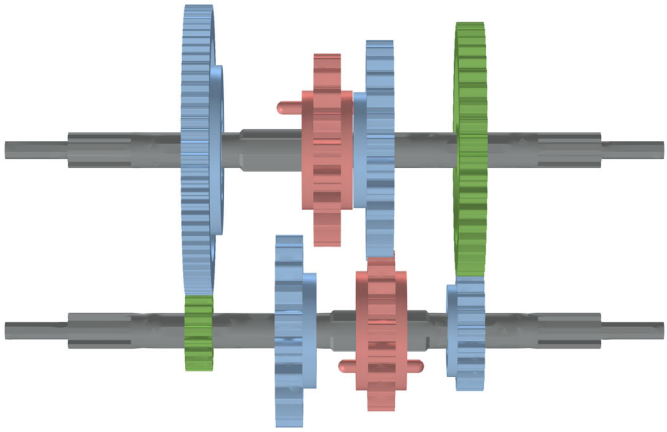

Figure 7: Gear arrangement when the third gear is engaged.

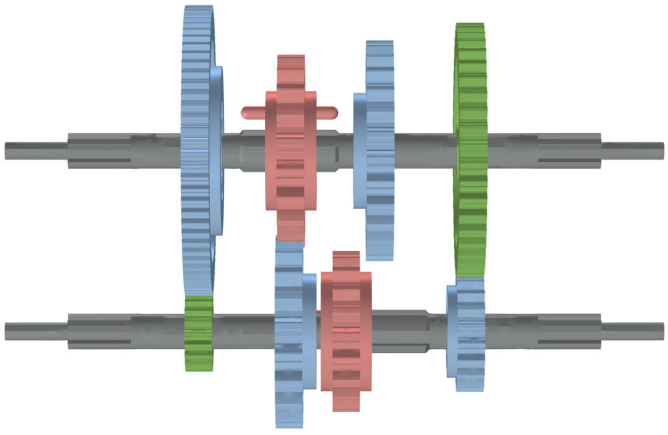

Figure 8: Gear arrangement when the fourth gear is engaged.

Figure 9 plots the angular velocities of driver and driven shaft as a function of time. Similarly, angular velocities of different gears are plotted in Figure 10. From these plots, it

can be seen that when gears are engaged, power is transferred to the driven shaft with different gear ratios.

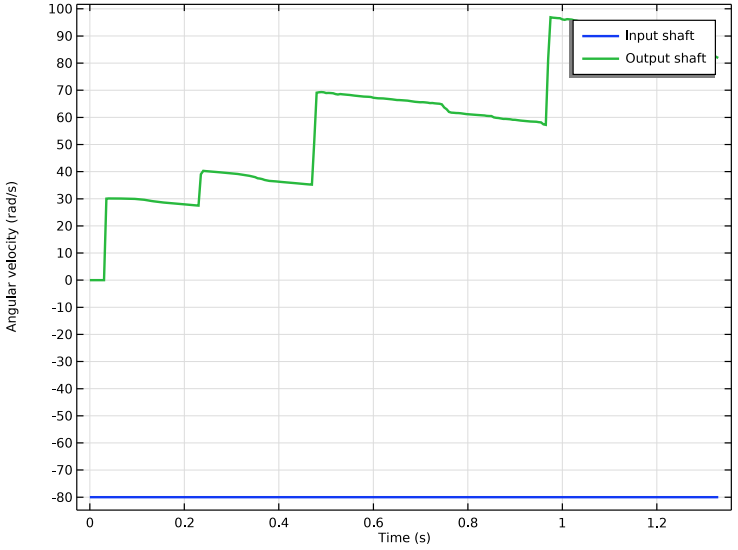

Figure 9: Angular velocities of shafts as a function of time.

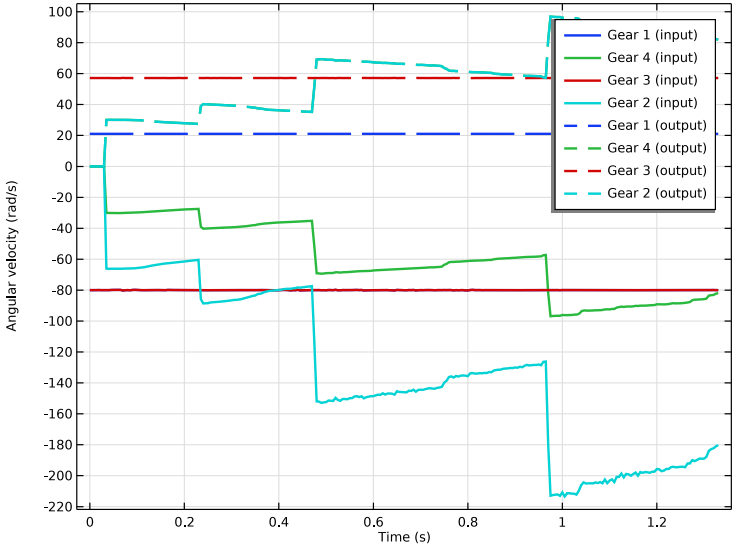

Figure 10: Angular velocities of gears as a function of time.

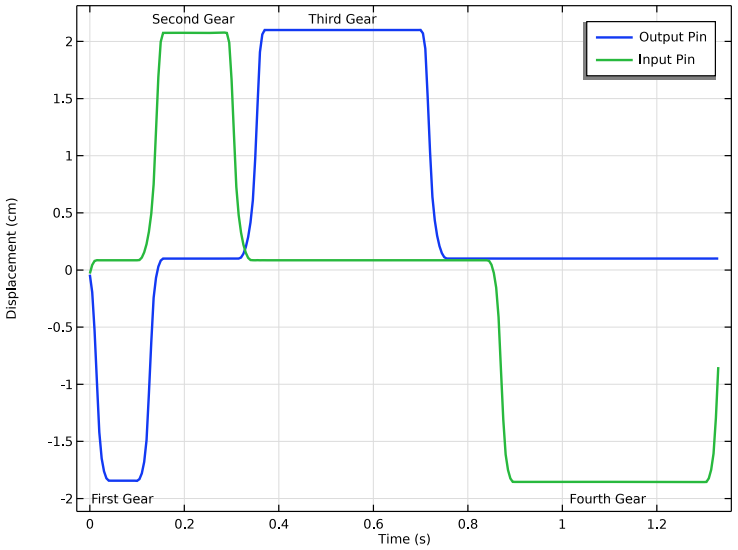

Figure 11: Lateral displacement of the input and output pins as a function of time.

Figure 11 shows the lateral movement of the sliding gear pins toward neighboring gears. As seen from the plot, when one pin move sideways to engage, the other pin will not move laterally. This ensures that only one gear pair is engaged at a time. This is possible because of the special arrangement of the grooves on the shifter drum.

Application Library path: `Multibody_Dynamics_Module/Automotive_and_Aerospace/sequential_gearbox_with_slotted_cam`

Modeling Instructions

From the **File** menu, choose **New**.

NEW

In the **New** window, click **Model Wizard**.

MODEL WIZARD

1 In the **Model Wizard** window, click **3D**.

2 In the **Select Physics** tree, select **Structural Mechanics** > **Multibody Dynamics (mbd)**.

3 Click **Add**.

4 Click **Study**.

5 In the **Select Study** tree, select **General Studies** > **Time Dependent**.

6 Click **Done**.

GLOBAL DEFINITIONS

Parameters 1

1 In the **Model Builder** window, under **Global Definitions** click **Parameters 1**.

2 In the **Settings** window for **Parameters**, locate the **Parameters** section.

3 Click **Load from File**.

4 Browse to the model's Application Libraries folder and double-click the file `sequential_gearbox_with_slotted_cam_parameters.txt`.

GEOMETRY 1

1 In the **Model Builder** window, expand the **Component 1 (comp1)** > **Geometry 1** node, then click **Geometry 1**.

2 In the **Settings** window for **Geometry**, locate the **Units** section.

3 From the **Length unit** list, choose **cm**.

4 Locate the **Advanced** section. From the **Geometry representation** list, choose **CAD kernel**.

5 Select the **Design Module Boolean operations** checkbox.

Import 1 (imp1)

You can import the geometry of the gearbox by browsing to the model's Application Libraries folder.

1 In the **Geometry** toolbar, click **Import**.

2 In the **Settings** window for **Import**, locate the **Source** section.

3 Click **Browse**.

4 Browse to the model's Application Libraries folder and double-click the file `sequential_gearbox_with_slotted_cam.mphbin`.

5 Click **Import**.

Distance Measurement 1 (dm1)

Find the radius of the slider gear pins and the centroids of the pin ends.

1 In the **Geometry** toolbar, click **Measurements** and choose **Distance Measurement**.

2 On the object **imp1(6)**, select Point 5 only.

3 In the **Settings** window for **Distance Measurement**, locate the **Geometric Entity Selection** section.

4 Click to select the **Activate Selection** toggle button for **Second entity**.

5 On the object **imp1(6)**, select Point 6 only.

6 Click **Build Selected**.

Distance Measurement 2 (dm2)

1 Right-click **Distance Measurement 1 (dm1)** and choose **Duplicate**.

2 In the **Settings** window for **Distance Measurement**, locate the **Geometric Entity Selection** section.

3 Click to select the **Activate Selection** toggle button for **First vertex**.

4 On the object **imp1(12)**, select Point 6 only.

5 Click to select the **Activate Selection** toggle button for **Second entity**.

6 On the object **imp1(12)**, select Point 5 only.

7 Click **Build Selected**.

Centroid Measurement 1 (cm1)

1 In the **Geometry** toolbar, click **Measurements** and choose **Centroid Measurement**.

2 On the object **imp1(6)**, select Points 2, 5, 6, and 9 only.

3 In the **Settings** window for **Centroid Measurement**, click **Build Selected**.

Centroid Measurement 2 (cm2)

1 Right-click **Centroid Measurement 1 (cm1)** and choose **Duplicate**.

2 In the **Settings** window for **Centroid Measurement**, locate the **Vertex Selection** section.

3 Click the **Clear Selection** button for **Vertices**.

4 On the object **imp1(6)**, select Points 10, 13, 14, and 17 only.

5 Click **Build Selected**.

Centroid Measurement 3 (cm3)

1 Right-click **Centroid Measurement 2 (cm2)** and choose **Duplicate**.

2 In the **Settings** window for **Centroid Measurement**, locate the **Vertex Selection** section.

3 Click the **Clear Selection** button for **Vertices**.

4 On the object **imp1(12)**, select Points 2, 5, 6, and 9 only.

5 Click **Build Selected**.

Centroid Measurement 4 (cm4)

1 Right-click **Centroid Measurement 3 (cm3)** and choose **Duplicate**.

2 In the **Settings** window for **Centroid Measurement**, locate the **Vertex Selection** section.

3 Click the  **Clear Selection** button for **Vertices**.

4 On the object **imp1(12)**, select Points 10, 13, 14, and 17 only.

5 Click  **Build Selected**.

Centroid Measurement 1 (cm1), Centroid Measurement 2 (cm2), Centroid Measurement 3 (cm3), Centroid Measurement 4 (cm4), Distance Measurement 1 (dm1), Distance Measurement 2 (dm2)

1 In the **Model Builder** window, under **Component 1 (comp1)** > **Geometry 1**, Ctrl-click to select **Distance Measurement 1 (dm1)**, **Distance Measurement 2 (dm2)**, **Centroid Measurement 1 (cm1)**, **Centroid Measurement 2 (cm2)**, **Centroid Measurement 3 (cm3)**, and **Centroid Measurement 4 (cm4)**.

2 Right-click and choose **Group**.

Measurements

In the **Settings** window for **Group**, type `Measurements` in the **Label** text field.

Form Union (fin)

1 In the **Model Builder** window, under **Component 1 (comp1)** > **Geometry 1** click **Form Union (fin)**.

2 In the **Settings** window for **Form Union/Assembly**, locate the **Form Union/Assembly** section.

3 From the **Action** list, choose **Form an assembly**.

4 Clear the **Create pairs** checkbox.

5 In the **Geometry** toolbar, click  **Build All**.

Disable the analysis of the geometry as the remaining small geometric details can be kept.

6 In the **Model Builder** window, click **Geometry 1**.

7 In the **Settings** window for **Geometry**, locate the **Cleanup** section.

8 Clear the **Automatic detection of small details** checkbox.

Explicit Selection 1 (sel1)

Now create selections of the geometry. You will use them later when setting up the physics and mesh.

In the **Geometry** toolbar, click  **Selections** and choose **Explicit Selection**.

GEOMETRY 1

1 In the **Model Builder** window, expand the **Component 1 (comp1)** > **Materials** node, then click **Component 1 (comp1)** > **Geometry 1** > **Explicit Selection 1 (sel1)**.

2 In the **Settings** window for **Explicit Selection**, type `Cam Ends` in the **Label** text field.

3 Locate the **Entities to Select** section. From the **Geometric entity level** list, choose **Boundary**.

4 On the object **fin**, select Boundaries 261 and 321 only.

5 Click **Build Selected**.

Input Shaft Ends

1 Right-click **Cam Ends** and choose **Duplicate**.

2 In the **Settings** window for **Explicit Selection**, type `Input Shaft Ends` in the **Label** text field.

3 Locate the **Entities to Select** section. Click the **Clear Selection** button for **Entities to select**.

4 On the object **fin**, select Boundaries 1 and 130 only.

5 Click **Build Selected**.

Output Shaft Ends

1 Right-click **Input Shaft Ends** and choose **Duplicate**.

2 In the **Settings** window for **Explicit Selection**, type `Output Shaft Ends` in the **Label** text field.

3 Locate the **Entities to Select** section. Click the **Clear Selection** button for **Entities to select**.

4 On the object **fin**, select Boundaries 131 and 260 only.

5 Click **Build Selected**.

Groove 1 Boundaries

1 Right-click **Output Shaft Ends** and choose **Duplicate**.

2 In the **Settings** window for **Explicit Selection**, type `Groove 1 Boundaries` in the **Label** text field.

3 Locate the **Entities to Select** section. Select the **Group by continuous tangent** checkbox.

4 On the object **fin**, select Boundaries 264, 265, 271–276, 279, and 282–284 only.

5 Click **Build Selected**.

Groove 2 Boundaries

1 Right-click **Groove 1 Boundaries** and choose **Duplicate**.

2 In the **Settings** window for **Explicit Selection**, type `Groove 2 Boundaries` in the **Label** text field.

3 On the object **fin**, select Boundaries 292, 293, 299–302, 305–307, and 310–312 only.

4 Click **Build Selected**.

Groove Boundaries

1 Right-click **Groove 2 Boundaries** and choose **Duplicate**.

2 In the **Settings** window for **Explicit Selection**, type `Groove Boundaries` in the **Label** text field.

3 On the object **fin**, select Boundaries 264–269, 271–297, and 299–319 only.

4 Click **Build Selected**.

Pin Ends

1 Right-click **Groove Boundaries** and choose **Duplicate**.

2 In the **Settings** window for **Explicit Selection**, type `Pin Ends` in the **Label** text field.

3 On the object **fin**, select Boundaries 1191 and 1675 only.

Groove Boundaries and Pin Ends

1 In the **Geometry** toolbar, click **Selections** and choose **Union Selection**.

2 In the **Settings** window for **Union Selection**, type `Groove Boundaries and Pin Ends` in the **Label** text field.

3 Locate the **Geometric Entity Level** section. From the **Level** list, choose **Boundary**.

4 Locate the **Input Entities** section. Click **Add**.

5 In the **Add** dialog, in the **Selections to add** list, choose **Groove Boundaries** and **Pin Ends**.

6 Click **OK**.

7 In the **Settings** window for **Union Selection**, click **Build Selected**.

Slots

1 In the **Model Builder** window, under **Component 1 (comp1)** > **Geometry 1** right-click **Pin Ends (sel7)** and choose **Duplicate**.

2 In the **Settings** window for **Explicit Selection**, type `Slots` in the **Label** text field.

3 Locate the **Entities to Select** section. From the **Geometric entity level** list, choose **Domain**.

4 On the object **fin**, select Domains 6, 12, 13, 16, 22–24, and 27 only.

5 Click **Build Selected**.

Pins

1 Right-click **Slots** and choose **Duplicate**.

2 In the **Settings** window for **Explicit Selection**, type `Pins` in the **Label** text field.

3 On the object **fin**, select Domains 8, 11, 18, and 21 only.

4 Click **Build Selected**.

Slots and Pins

1 In the **Model Builder** window, under **Component 1 (comp1)** > **Geometry 1** right-click **Groove Boundaries and Pin Ends (unisel1)** and choose **Duplicate**.

2 In the **Settings** window for **Union Selection**, type `Slots and Pins` in the **Label** text field.

3 Locate the **Geometric Entity Level** section. From the **Level** list, choose **Domain**.

4 Locate the **Input Entities** section. Click **Add**.

5 In the **Add** dialog, in the **Selections to add** list, choose **Slots** and **Pins**.

6 Click **OK**.

7 In the **Settings** window for **Union Selection**, click **Build Selected**.

Free Rotating Gears

1 In the **Model Builder** window, under **Component 1 (comp1)** > **Geometry 1** right-click **Pins (sel9)** and choose **Duplicate**.

2 In the **Settings** window for **Explicit Selection**, type `Free Rotating Gears` in the **Label** text field.

3 On the object **fin**, select Domains 5, 6, 14, 16, 22, and 26–28 only.

4 Locate the **Color** section. From the **Color** list, choose **None** or — if you are running the cross-platform desktop —**Custom**. On the cross-platform desktop, click the **Color** button.

5 Click **Define custom colors**.

6 Set the RGB values to 139, 177, and 217, respectively.

7 Click **Add to custom colors**.

8 Click **Show color palette only** or **OK** on the cross-platform desktop.

9 Click **Build Selected**.

Fixed Gears

1 Right-click **Free Rotating Gears** and choose **Duplicate**.

2 In the **Settings** window for **Explicit Selection**, type `Fixed Gears` in the **Label** text field.

3 On the object **fin**, select Domains 4 and 29 only.

4 Locate the **Color** section. Click **Define custom colors**.

5 Set the RGB values to 116, 219, and 207, respectively.

6 Click **Add to custom colors**.

7 Click **Show color palette only** or **OK** on the cross-platform desktop.

8 Click  **Build Selected**.

Sliding Gears

1 Right-click **Fixed Gears** and choose **Duplicate**.

2 In the **Settings** window for **Explicit Selection**, type `Sliding Gears` in the **Label** text field.

3 On the object **fin**, select Domains 7–9, 12, 13, 15, 17–19, and 23–25 only.

4 Locate the **Color** section. Click **Define custom colors**.

5 Set the RGB values to 214, 127, and 122, respectively.

6 Click **Add to custom colors**.

7 Click **Show color palette only** or **OK** on the cross-platform desktop.

8 Click  **Build Selected**.

Shafts

1 Right-click **Sliding Gears** and choose **Duplicate**.

2 In the **Settings** window for **Explicit Selection**, type `Shafts` in the **Label** text field.

3 On the object **fin**, select Domains 1 and 2 only.

4 Locate the **Color** section. Click **Define custom colors**.

5 Set the RGB values to 127, 130, and 130, respectively.

6 Click **Add to custom colors**.

7 Click **Show color palette only** or **OK** on the cross-platform desktop.

8 Click  **Build Selected**.

Cam

1 Right-click **Shafts** and choose **Duplicate**.

2 In the **Settings** window for **Explicit Selection**, type `Cam` in the **Label** text field.

3 On the object **fin**, select Domain 3 only.

4 Locate the **Color** section. Click **Define custom colors**.

5 Set the RGB values to 216, 203, and 203, respectively.

6 Click **Add to custom colors**.

7 Click **Show color palette only** or **OK** on the cross-platform desktop.

8 Click **Build Selected**.

Shift Forks

1 Right-click **Cam** and choose **Duplicate**.

2 In the **Settings** window for **Explicit Selection**, type `Shift Forks` in the **Label** text field.

3 On the object **fin**, select Domains 10, 11, 20, and 21 only.

4 Locate the **Color** section. Click **Define custom colors**.

5 Set the RGB values to 189, 189, and 165, respectively.

6 Click **Add to custom colors**.

7 Click **Show color palette only** or **OK** on the cross-platform desktop.

8 Click **Build Selected**.

Cam (sel14), Cam Ends (sel1), Fixed Gears (sel11), Free Rotating Gears (sel10), Groove 1 Boundaries (sel4), Groove 2 Boundaries (sel5), Groove Boundaries (sel6), Groove Boundaries and Pin Ends (unisel1), Input Shaft Ends (sel2), Output Shaft Ends (sel3), Pin Ends (sel7), Pins (sel9), Shafts (sel13), Shift Forks (sel15), Sliding Gears (sel12), Slots (sel8), Slots and Pins (unisel2)

1 In the **Model Builder** window, under **Component 1 (comp1)** > **Geometry 1**, Ctrl-click to select **Cam Ends (sel1)**, **Input Shaft Ends (sel2)**, **Output Shaft Ends (sel3)**, **Groove 1 Boundaries (sel4)**, **Groove 2 Boundaries (sel5)**, **Groove Boundaries (sel6)**, **Pin Ends (sel7)**, **Groove Boundaries and Pin Ends (unisel1)**, **Slots (sel8)**, **Pins (sel9)**, **Slots and Pins (unisel2)**, **Free Rotating Gears (sel10)**, **Fixed Gears (sel11)**, **Sliding Gears (sel12)**, **Shafts (sel13)**, **Cam (sel14)**, and **Shift Forks (sel15)**.

2 Right-click and choose **Group**.

Selections

In the **Settings** window for **Group**, type `Selections` in the **Label** text field.

Describe the rotation of the cam using a piecewise function.

DEFINITIONS

Angular Velocity

1 In the **Definitions** toolbar, click **Piecewise**.

2 In the **Settings** window for **Piecewise**, type `Angular Velocity` in the **Label** text field.

3 In the **Function name** text field, type `angVel`.

4 Locate the **Definition** section. Find the **Intervals** subsection. In the table, enter the following settings:

Start	End	Function
t0	t1	omega_c
t1	t2	0
t2	t3	omega_c
t3	t4	0
t4	t5	omega_c
t5	t6	0
t6	t7	omega_c
t7	t8	0
t8	tf	omega_c

5 Locate the **Units** section. In the **Arguments** text field, type `s`.

6 In the **Function** text field, type `rad/s`.

7 Click to expand the **Local Parameters** section. In the table, enter the following settings:

Name	Expression
t0	0
t1	0.04
t2	0.1
t3	0.155
t4	0.285
t5	0.37
t6	0.7
t7	0.895
t8	1.3

Step 1 (step1)

1 In the **Definitions** toolbar, click f(x) **More Functions** and choose **Step**.

2 In the **Settings** window for **Step**, locate the **Parameters** section.

3 In the **Location** text field, type `0.04`.

4 Click to expand the **Smoothing** section. In the **Size of transition zone** text field, type `0.1`.

5 From the **Location definition** list, choose **Beginning of step**.

MATERIALS

Assign material properties. Use **Structural steel** for all domains.

ADD MATERIAL

1 In the **Materials** toolbar, click  **Add Material** to open the **Add Material** window.

2 Go to the **Add Material** window.

3 In the tree, select **Built-in** > **Structural steel**.

4 Right-click and choose **Add to Component 1 (comp1)**.

5 In the **Materials** toolbar, click  **Add Material** to close the **Add Material** window.

MULTIBODY DYNAMICS (MBD)

Cam

1 In the **Physics** toolbar, click  **Domains** and choose **Rigid Material**.

2 Select Domain 3 only.

3 In the **Settings** window for **Rigid Material**, type `Cam` in the **Label** text field.

Input Shaft

1 Right-click **Cam** and choose **Duplicate**.

2 In the **Settings** window for **Rigid Material**, type `Input Shaft` in the **Label** text field.

3 Locate the **Domain Selection** section. Click  **Clear Selection**.

4 Select Domain 1 only.

Output Shaft

1 Right-click **Input Shaft** and choose **Duplicate**.

2 In the **Settings** window for **Rigid Material**, type `Output Shaft` in the **Label** text field.

3 Locate the **Domain Selection** section. Click  **Clear Selection**.

4 Select Domain 2 only.

Shift Fork 1

1 Right-click **Output Shaft** and choose **Duplicate**.

2 In the **Settings** window for **Rigid Material**, type `Shift Fork 1` in the **Label** text field.

3 Locate the **Domain Selection** section. Click  **Clear Selection**.

4 Select Domains 10 and 11 only.

Shift Fork 2

1 Right-click **Shift Fork 1** and choose **Duplicate**.

2 In the **Settings** window for **Rigid Material**, type `Shift Fork 2` in the **Label** text field.

3 Locate the **Domain Selection** section. Click **Clear Selection**.

4 Select Domains 20 and 21 only.

Input Pin

1 Right-click **Shift Fork 2** and choose **Duplicate**.

2 In the **Settings** window for **Rigid Material**, type `Input Pin` in the **Label** text field.

3 Locate the **Domain Selection** section. Click **Clear Selection**.

4 Select Domains 17–19 only.

Output Pin

1 Right-click **Input Pin** and choose **Duplicate**.

2 In the **Settings** window for **Rigid Material**, type `Output Pin` in the **Label** text field.

3 Locate the **Domain Selection** section. Click **Clear Selection**.

4 Select Domains 7–9 only.

Cam, Input Pin, Input Shaft, Output Pin, Output Shaft, Shift Fork 1, Shift Fork 2

1 In the **Model Builder** window, under **Component 1 (comp1)** > **Multibody Dynamics (mbd)**, Ctrl-click to select **Cam**, **Input Shaft**, **Output Shaft**, **Shift Fork 1**, **Shift Fork 2**, **Input Pin**, and **Output Pin**.

2 Right-click and choose **Group**.

Rigid Materials

In the **Settings** window for **Group**, type `Rigid Materials` in the **Label** text field.

Spur Gear 1 (Input)

1 In the **Physics** toolbar, click **Domains** and choose **Spur Gear**.

2 In the **Settings** window for **Spur Gear**, type `Spur Gear 1 (Input)` in the **Label** text field.

3 Select Domain 4 only.

4 Locate the **Gear Properties** section. In the n text field, type `n1i`.

5 In the d_p text field, type `d1i`.

6 In the α text field, type `alpha`.

7 Locate the **Gear Axis** section. Specify the $\mathbf{e}_g$ vector as

1	x
0	z

8 Locate the **Center of Rotation** section. From the list, choose **User defined**.

Spur Gear 1 (Output)

1 Right-click **Spur Gear 1 (Input)** and choose **Duplicate**.

2 In the **Settings** window for **Spur Gear**, type `Spur Gear 1 (Output)` in the **Label** text field.

3 Locate the **Domain Selection** section. Click  **Clear Selection**.

4 Select Domains 5 and 6 only.

5 Locate the **Gear Properties** section. In the n text field, type `n1o`.

6 In the d_p text field, type `d1o`.

7 Locate the **Center of Rotation** section. Specify the $\mathbf{X}_c$ vector as

`cdy`	`y`

Spur Gear 4 (Input)

1 Right-click **Spur Gear 1 (Output)** and choose **Duplicate**.

2 In the **Settings** window for **Spur Gear**, type `Spur Gear 4 (Input)` in the **Label** text field.

3 Locate the **Domain Selection** section. Click  **Clear Selection**.

4 Select Domains 14 and 16 only.

5 Locate the **Gear Properties** section. In the n text field, type `n4i`.

6 In the d_p text field, type `d4i`.

7 Locate the **Center of Rotation** section. Specify the $\mathbf{X}_c$ vector as

`cdx`	`x`
`0`	`y`

Spur Gear 4 (Output)

1 Right-click **Spur Gear 4 (Input)** and choose **Duplicate**.

2 In the **Settings** window for **Spur Gear**, type `Spur Gear 4 (Output)` in the **Label** text field.

3 Locate the **Domain Selection** section. Click  **Clear Selection**.

4 Select Domains 12, 13, and 15 only.

5 Locate the **Gear Properties** section. In the n text field, type `n4o`.

6 In the d_p text field, type `d4o`.

7 Locate the **Center of Rotation** section. Specify the $\mathbf{X}_c$ vector as

cdx	x
cdy	y

Spur Gear 3 (Input)

1 Right-click **Spur Gear 4 (Output)** and choose **Duplicate**.

2 In the **Settings** window for **Spur Gear**, type `Spur Gear 3 (Input)` in the **Label** text field.

3 Locate the **Domain Selection** section. Click  **Clear Selection**.

4 Select Domains 23–25 only.

5 Locate the **Gear Properties** section. In the n text field, type `n3i`.

6 In the d_p text field, type `d3i`.

7 Locate the **Center of Rotation** section. Specify the $\mathbf{X}_c$ vector as

2*cdx	x
0	y

Spur Gear 3 (Output)

1 Right-click **Spur Gear 3 (Input)** and choose **Duplicate**.

2 In the **Settings** window for **Spur Gear**, type `Spur Gear 3 (Output)` in the **Label** text field.

3 Locate the **Domain Selection** section. Click  **Clear Selection**.

4 Select Domains 22 and 26 only.

5 Locate the **Gear Properties** section. In the n text field, type `n3o`.

6 In the d_p text field, type `d3o`.

7 Locate the **Center of Rotation** section. Specify the $\mathbf{X}_c$ vector as

2*cdx	x
cdy	y

Spur Gear 2 (Input)

1 Right-click **Spur Gear 3 (Output)** and choose **Duplicate**.

2 In the **Settings** window for **Spur Gear**, type `Spur Gear 2 (Input)` in the **Label** text field.

3 Locate the **Domain Selection** section. Click  **Clear Selection**.

4 Select Domains 27 and 28 only.

5 Locate the **Gear Properties** section. In the n text field, type `n2i`.

6 In the d_p text field, type `d2i`.

7 Locate the **Center of Rotation** section. Specify the $\mathbf{X}_c$ vector as

`3*cdx`	x
0	y

Spur Gear 2 (Output)

1 Right-click **Spur Gear 2 (Input)** and choose **Duplicate**.

2 In the **Settings** window for **Spur Gear**, type `Spur Gear 2 (Output)` in the **Label** text field.

3 Locate the **Domain Selection** section. Click  **Clear Selection**.

4 Select Domain 29 only.

5 Locate the **Gear Properties** section. In the n text field, type `n2o`.

6 In the d_p text field, type `d2o`.

7 Locate the **Center of Rotation** section. Specify the $\mathbf{X}_c$ vector as

`3*cdx`	x
cdy	y

Spur Gear 1 (Input), Spur Gear 1 (Output), Spur Gear 2 (Input), Spur Gear 2 (Output), Spur Gear 3 (Input), Spur Gear 3 (Output), Spur Gear 4 (Input), Spur Gear 4 (Output)

1 In the **Model Builder** window, under **Component 1 (comp1)** > **Multibody Dynamics (mbd)**, Ctrl-click to select **Spur Gear 1 (Input)**, **Spur Gear 1 (Output)**, **Spur Gear 4 (Input)**, **Spur Gear 4 (Output)**, **Spur Gear 3 (Input)**, **Spur Gear 3 (Output)**, **Spur Gear 2 (Input)**, and **Spur Gear 2 (Output)**.

2 Right-click and choose **Group**.

Gears

In the **Settings** window for **Group**, type `Gears` in the **Label** text field.

Gear Pair: First

1 In the **Physics** toolbar, click  **Global** and choose **Gear Pair**.

2 In the **Settings** window for **Gear Pair**, type `Gear Pair: First` in the **Label** text field.

3 Locate the **Gear Selection** section. From the **Wheel** list, choose **Spur Gear 1 (Input)**.

4 From the **Pinion** list, choose **Spur Gear 1 (Output)**.

Gear Pair: Fourth

1 Right-click **Gear Pair: First** and choose **Duplicate**.

2 In the **Settings** window for **Gear Pair**, type `Gear Pair: Fourth` in the **Label** text field.

3 Locate the **Gear Selection** section. From the **Wheel** list, choose **Spur Gear 4 (Input)**.

4 From the **Pinion** list, choose **Spur Gear 4 (Output)**.

Gear Pair: Third

1 Right-click **Gear Pair: Fourth** and choose **Duplicate**.

2 In the **Settings** window for **Gear Pair**, type `Gear Pair: Third` in the **Label** text field.

3 Locate the **Gear Selection** section. From the **Wheel** list, choose **Spur Gear 3 (Input)**.

4 From the **Pinion** list, choose **Spur Gear 3 (Output)**.

Gear Pair: Second

1 Right-click **Gear Pair: Third** and choose **Duplicate**.

2 In the **Settings** window for **Gear Pair**, type `Gear Pair: Second` in the **Label** text field.

3 Locate the **Gear Selection** section. From the **Wheel** list, choose **Spur Gear 2 (Input)**.

4 From the **Pinion** list, choose **Spur Gear 2 (Output)**.

Gear Pair: First, Gear Pair: Fourth, Gear Pair: Second, Gear Pair: Third

1 In the **Model Builder** window, under **Component 1 (comp1)** > **Multibody Dynamics (mbd)**, Ctrl-click to select **Gear Pair: First**, **Gear Pair: Fourth**, **Gear Pair: Third**, and **Gear Pair: Second**.

2 Right-click and choose **Group**.

Gear Pairs

In the **Settings** window for **Group**, type `Gear Pairs` in the **Label** text field.

Hinge Joint 1

1 In the **Physics** toolbar, click  **Global** and choose **Hinge Joint**.

2 In the **Settings** window for **Hinge Joint**, locate the **Attachment Selection** section.

3 From the **Source** list, choose **Output Shaft**.

4 From the **Destination** list, choose **Spur Gear 1 (Output)**.

Hinge Joint 2

1 Right-click **Hinge Joint 1** and choose **Duplicate**.

2 In the **Settings** window for **Hinge Joint**, locate the **Attachment Selection** section.

3 From the **Source** list, choose **Input Shaft**.

4 From the **Destination** list, choose **Spur Gear 4 (Input)**.

Hinge Joint 3

1 Right-click **Hinge Joint 2** and choose **Duplicate**.

2 In the **Settings** window for **Hinge Joint**, locate the **Attachment Selection** section.

3 From the **Source** list, choose **Output Shaft**.

4 From the **Destination** list, choose **Spur Gear 3 (Output)**.

Hinge Joint 4

1 Right-click **Hinge Joint 3** and choose **Duplicate**.

2 In the **Settings** window for **Hinge Joint**, locate the **Attachment Selection** section.

3 From the **Source** list, choose **Input Shaft**.

4 From the **Destination** list, choose **Spur Gear 2 (Input)**.

Hinge Joint 5

1 Right-click **Hinge Joint 4** and choose **Duplicate**.

2 In the **Settings** window for **Hinge Joint**, locate the **Attachment Selection** section.

3 From the **Source** list, choose **Fixed**.

4 From the **Destination** list, choose **Cam**.

Center of Joint: Boundary 1

1 In the **Model Builder** window, click **Center of Joint: Boundary 1**.

2 In the **Settings** window for **Center of Joint: Boundary**, locate the **Boundary Selection** section.

3 From the **Selection** list, choose **Cam Ends**.

Hinge Joint 5

In the **Model Builder** window, click **Hinge Joint 5**.

Prescribed Motion 1

1 In the **Physics** toolbar, click **Attributes** and choose **Prescribed Motion**.

2 In the **Settings** window for **Prescribed Motion**, locate the **Prescribed Rotational Motion** section.

3 From the **Prescribed motion through** list, choose **Angular velocity**.

4 In the ω_p text field, type `-angVel(t)`.

Hinge Joint 6

1 Right-click **Hinge Joint 5** and choose **Duplicate**.

2 In the **Settings** window for **Hinge Joint**, locate the **Attachment Selection** section.

3 From the **Destination** list, choose **Input Shaft**.

Center of Joint: Boundary 1

1 In the **Model Builder** window, expand the **Hinge Joint 6** node, then click **Center of Joint: Boundary 1**.

2 In the **Settings** window for **Center of Joint: Boundary**, locate the **Boundary Selection** section.

3 From the **Selection** list, choose **Input Shaft Ends**.

Prescribed Motion 1

1 In the **Model Builder** window, click **Prescribed Motion 1**.

2 In the **Settings** window for **Prescribed Motion**, locate the **Prescribed Rotational Motion** section.

3 In the ω_p text field, type `-omega`.

Hinge Joint 7

1 In the **Model Builder** window, under **Component 1 (comp1)** > **Multibody Dynamics (mbd)** right-click **Hinge Joint 6** and choose **Duplicate**.

2 In the **Settings** window for **Hinge Joint**, locate the **Attachment Selection** section.

3 From the **Destination** list, choose **Output Shaft**.

Center of Joint: Boundary 1

1 In the **Model Builder** window, expand the **Hinge Joint 7** node, then click **Center of Joint: Boundary 1**.

2 In the **Settings** window for **Center of Joint: Boundary**, locate the **Boundary Selection** section.

3 From the **Selection** list, choose **Output Shaft Ends**.

Prescribed Motion 1

In the **Model Builder** window, right-click **Prescribed Motion 1** and choose **Delete**.

Hinge Joint 7

In the **Model Builder** window, under **Component 1 (comp1)** > **Multibody Dynamics (mbd)** click **Hinge Joint 7**.

Applied Force and Moment 1

1 In the **Physics** toolbar, click  **Attributes** and choose **Applied Force and Moment**.

2 In the **Settings** window for **Applied Force and Moment**, locate the **Applied Force and Moment** section.

3 Specify the **M** vector as

`-T_ext*step1(t)`	x

Hinge Joint 8

1 Right-click **Hinge Joint 7** and choose **Duplicate**.

2 In the **Settings** window for **Hinge Joint**, locate the **Attachment Selection** section.

3 From the **Source** list, choose **Spur Gear 4 (Output)**.

4 From the **Destination** list, choose **Shift Fork 1**.

5 Locate the **Center of Joint** section. From the list, choose **Centroid of source**.

Applied Force and Moment 1

1 In the **Model Builder** window, expand the **Hinge Joint 8** node.

2 Right-click **Applied Force and Moment 1** and choose **Delete**.

Hinge Joint 9

1 Right-click **Component 1 (comp1)** > **Multibody Dynamics (mbd)** > **Hinge Joint 8** and choose **Duplicate**.

2 In the **Settings** window for **Hinge Joint**, locate the **Attachment Selection** section.

3 From the **Source** list, choose **Spur Gear 3 (Input)**.

4 From the **Destination** list, choose **Shift Fork 2**.

Hinge Joint 1, Hinge Joint 2, Hinge Joint 3, Hinge Joint 4, Hinge Joint 5, Hinge Joint 6, Hinge Joint 7, Hinge Joint 8, Hinge Joint 9

1 In the **Model Builder** window, under **Component 1 (comp1)** > **Multibody Dynamics (mbd)**, Ctrl-click to select **Hinge Joint 1**, **Hinge Joint 2**, **Hinge Joint 3**, **Hinge Joint 4**, **Hinge Joint 5**, **Hinge Joint 6**, **Hinge Joint 7**, **Hinge Joint 8**, and **Hinge Joint 9**.

2 Right-click and choose **Group**.

Hinge Joints

In the **Settings** window for **Group**, type `Hinge Joints` in the **Label** text field.

Fixed Joint 1

1 In the **Physics** toolbar, click **Global** and choose **Fixed Joint**.

2 In the **Settings** window for **Fixed Joint**, locate the **Attachment Selection** section.

3 From the **Source** list, choose **Input Shaft**.

4 From the **Destination** list, choose **Spur Gear 1 (Input)**.

Fixed Joint 2

1 Right-click **Fixed Joint 1** and choose **Duplicate**.

2 In the **Settings** window for **Fixed Joint**, locate the **Attachment Selection** section.

3 From the **Source** list, choose **Output Shaft**.

4 From the **Destination** list, choose **Spur Gear 2 (Output)**.

Fixed Joint 3

1 Right-click **Fixed Joint 2** and choose **Duplicate**.

2 In the **Settings** window for **Fixed Joint**, locate the **Attachment Selection** section.

3 From the **Source** list, choose **Output Pin**.

4 From the **Destination** list, choose **Spur Gear 4 (Output)**.

Fixed Joint 4

1 Right-click **Fixed Joint 3** and choose **Duplicate**.

2 In the **Settings** window for **Fixed Joint**, locate the **Attachment Selection** section.

3 From the **Source** list, choose **Input Pin**.

4 From the **Destination** list, choose **Spur Gear 3 (Input)**.

Fixed Joint 1, Fixed Joint 2, Fixed Joint 3, Fixed Joint 4

1 In the **Model Builder** window, under **Component 1 (comp1)** > **Multibody Dynamics (mbd)**, Ctrl-click to select **Fixed Joint 1**, **Fixed Joint 2**, **Fixed Joint 3**, and **Fixed Joint 4**.

2 Right-click and choose **Group**.

Fixed Joints

In the **Settings** window for **Group**, type `Fixed Joints` in the **Label** text field.

Prismatic Joint 1

1 In the **Physics** toolbar, click  **Global** and choose **Prismatic Joint**.

2 In the **Settings** window for **Prismatic Joint**, locate the **Attachment Selection** section.

3 From the **Source** list, choose **Spur Gear 4 (Output)**.

4 From the **Destination** list, choose **Output Shaft**.

Prismatic Joint 2

1 Right-click **Prismatic Joint 1** and choose **Duplicate**.

2 In the **Settings** window for **Prismatic Joint**, locate the **Attachment Selection** section.

3 From the **Source** list, choose **Spur Gear 3 (Input)**.

4 From the **Destination** list, choose **Input Shaft**.

Prismatic Joint 1, Prismatic Joint 2

1 In the **Model Builder** window, under **Component 1 (comp1)** > **Multibody Dynamics (mbd)**, Ctrl-click to select **Prismatic Joint 1** and **Prismatic Joint 2**.

2 Right-click and choose **Group**.

Prismatic Joints

In the **Settings** window for **Group**, type `Prismatic Joints` in the **Label** text field.

Cylindrical Joint 1

1 In the **Physics** toolbar, click **Global** and choose **Cylindrical Joint**.

2 In the **Settings** window for **Cylindrical Joint**, locate the **Attachment Selection** section.

3 From the **Source** list, choose **Cam**.

4 From the **Destination** list, choose **Shift Fork 1**.

Center of Joint: Boundary 1

1 In the **Model Builder** window, click **Center of Joint: Boundary 1**.

2 In the **Settings** window for **Center of Joint: Boundary**, locate the **Boundary Selection** section.

3 From the **Selection** list, choose **Cam Ends**.

Cylindrical Joint 2

1 In the **Model Builder** window, under **Component 1 (comp1)** > **Multibody Dynamics (mbd)** right-click **Cylindrical Joint 1** and choose **Duplicate**.

2 In the **Settings** window for **Cylindrical Joint**, locate the **Attachment Selection** section.

3 From the **Destination** list, choose **Shift Fork 2**.

4 In the **Model Builder** window, expand the **Cylindrical Joint 2** node.

Cylindrical Joint 1, Cylindrical Joint 2

1 In the **Model Builder** window, under **Component 1 (comp1)** > **Multibody Dynamics (mbd)**, Ctrl-click to select **Cylindrical Joint 1** and **Cylindrical Joint 2**.

2 Right-click and choose **Group**.

Cylindrical Joints

In the **Settings** window for **Group**, type `Cylindrical Joints` in the **Label** text field.

Cam-Follower 1

1 In the **Physics** toolbar, click **Global** and choose **Cam-Follower**.

2 In the **Settings** window for **Cam-Follower**, locate the **Boundary Selection, Cam** section.

3 From the **Selection** list, choose **Groove 1 Boundaries**.

4 Locate the **Follower** section. From the **Connection point** list, choose **Geometric point**.

5 Locate the **Point Selection, Follower** section. Click to select the **Activate Selection** toggle button.

6 Select Point 2187 only.

Cam-Follower 2

1 Right-click **Cam-Follower 1** and choose **Duplicate**.

2 In the **Settings** window for **Cam-Follower**, locate the **Boundary Selection, Cam** section.

3 From the **Selection** list, choose **Groove 2 Boundaries**.

4 Locate the **Point Selection, Follower** section. Click to select the **Activate Selection** toggle button.

5 Select Point 3101 only.

Cam-Follower 1, Cam-Follower 2

1 In the **Model Builder** window, under **Component 1 (comp1)** > **Multibody Dynamics (mbd)**, Ctrl-click to select **Cam-Follower 1** and **Cam-Follower 2**.

2 Right-click and choose **Group**.

Cam-Followers

In the **Settings** window for **Group**, type `Cam-Followers` in the **Label** text field.

Rigid Body Contact 1

1 In the **Physics** toolbar, click **Global** and choose **Rigid Body Contact**.

2 In the **Settings** window for **Rigid Body Contact**, locate the **Source** section.

3 From the **Source** list, choose **Output Pin**.

4 From the **Shape parameters** list, choose **User defined**.

5 In the r_s text field, type `geom1.dm1/2`.

6 Specify the $\mathbf{X}_s$ vector as

`geom1.cm1.x`	x
`geom1.cm1.y`	y
`geom1.cm1.z`	z

7 Locate the **Destination** section. From the **Shape** list, choose **Arbitrary**.

8 Locate the **Boundary Selection, Destination** section. Click **Clear Selection**.

9 Select Boundaries 1157 and 1158 only.

10 Locate the **Contact Settings** section. In the f_p text field, type `0.01`.

Rigid Body Contact 2

1 Right-click **Rigid Body Contact 1** and choose **Duplicate**.

2 In the **Settings** window for **Rigid Body Contact**, locate the **Source** section.

3 Specify the $\mathbf{X}_s$ vector as

geom1.cm2.x	x
geom1.cm2.y	y
geom1.cm2.z	z

4 Locate the **Boundary Selection, Destination** section. Click  **Clear Selection**.

5 Select Boundaries 1706 and 1710 only.

Rigid Body Contact 3

1 Right-click **Rigid Body Contact 2** and choose **Duplicate**.

2 In the **Settings** window for **Rigid Body Contact**, locate the **Source** section.

3 From the **Source** list, choose **Input Pin**.

4 In the r_s text field, type `geom1.dm2/2`.

5 Specify the $\mathbf{X}_s$ vector as

geom1.cm3.x	x
geom1.cm3.y	y
geom1.cm3.z	z

6 Locate the **Boundary Selection, Destination** section. Click  **Clear Selection**.

7 Select Boundaries 1639 and 1643 only.

Rigid Body Contact 4

1 Right-click **Rigid Body Contact 3** and choose **Duplicate**.

2 In the **Settings** window for **Rigid Body Contact**, locate the **Source** section.

3 Specify the $\mathbf{X}_s$ vector as

geom1.cm4.x	x
geom1.cm4.y	y
geom1.cm4.z	z

4 Select Boundaries 2247 and 2250 only.

Rigid Body Contact 1, Rigid Body Contact 2, Rigid Body Contact 3, Rigid Body Contact 4

1 In the **Model Builder** window, under **Component 1 (comp1)** > **Multibody Dynamics (mbd)**, Ctrl-click to select **Rigid Body Contact 1**, **Rigid Body Contact 2**, **Rigid Body Contact 3**, and **Rigid Body Contact 4**.

2 Right-click and choose **Group**.

Rigid Body Contacts

In the **Settings** window for **Group**, type `Rigid Body Contacts` in the **Label** text field.

MESH 1

Mapped 1

1 In the **Mesh** toolbar, click  **More Generators** and choose **Mapped**.

2 In the **Settings** window for **Mapped**, locate the **Boundary Selection** section.

3 From the **Selection** list, choose **Groove Boundaries and Pin Ends**.

Size 1

1 Right-click **Mapped 1** and choose **Size**.

2 In the **Settings** window for **Size**, locate the **Element Size** section.

3 Click the **Custom** button.

4 Locate the **Element Size Parameters** section.

5 Select the **Maximum element size** checkbox. In the associated text field, type `0.08`.

6 Click  **Build Selected**.

Size 2

1 In the **Model Builder** window, right-click **Mapped 1** and choose **Size**.

2 In the **Settings** window for **Size**, locate the **Geometric Entity Selection** section.

3 From the **Selection** list, choose **Pin Ends**.

4 Locate the **Element Size** section. Click the **Custom** button.

5 Locate the **Element Size Parameters** section.

6 Select the **Maximum element size** checkbox. In the associated text field, type `0.01`.

7 Click  **Build Selected**.

Swept 1

1 In the **Mesh** toolbar, click  **Swept**.

2 In the **Settings** window for **Swept**, locate the **Domain Selection** section.

3 From the **Geometric entity level** list, choose **Domain**.

4 From the **Selection** list, choose **Slots and Pins**.

Size 1

1 Right-click **Swept 1** and choose **Size**.

2 In the **Settings** window for **Size**, locate the **Element Size** section.

3 From the **Predefined** list, choose **Extremely fine**.

Distribution 1

1 In the **Model Builder** window, right-click **Swept 1** and choose **Distribution**.

2 In the **Settings** window for **Distribution**, locate the **Distribution** section.

3 In the **Number of elements** text field, type 3.

Distribution 2

1 Right-click **Swept 1** and choose **Distribution**.

2 Select Domains 8 and 18 only.

3 In the **Settings** window for **Distribution**, locate the **Distribution** section.

4 In the **Number of elements** text field, type 30.

Free Triangular 1

1 In the **Mesh** toolbar, click  **More Generators** and choose **Free Triangular**.

2 Select Boundaries 1, 130, 131, 260, 262, and 320 only.

Size 1

1 Right-click **Free Triangular 1** and choose **Size**.

2 In the **Settings** window for **Size**, locate the **Element Size** section.

3 From the **Predefined** list, choose **Fine**.

Free Tetrahedral 1

1 In the **Mesh** toolbar, click  **Free Tetrahedral**.

2 In the **Settings** window for **Free Tetrahedral**, click  **Build All**.

STUDY 1

Step 1: Time Dependent

1 In the **Model Builder** window, under **Study 1** click **Step 1: Time Dependent**.

2 In the **Settings** window for **Time Dependent**, locate the **Study Settings** section.

3 In the **Output times** text field, type `range(0,0.005,tf)`.

Solution 1 (sol1)

1 In the **Study** toolbar, click **Show Default Solver**.

2 In the **Model Builder** window, expand the **Solution 1 (sol1)** node.

3 In the **Model Builder** window, under **Study 1** > **Solver Configurations** > **Solution 1 (sol1)** click **Time-Dependent Solver 1**.

4 In the **Settings** window for **Time-Dependent Solver**, click to expand the **Time Stepping** section.

5 From the **Steps taken by solver** list, choose **Intermediate**.

6 In the **Study** toolbar, click **Compute**.

RESULTS

Click the **Show Grid** button in the **Graphics** toolbar.

Displacement (mbd)

Follow the instructions below to plot the system displacement when the first gear is engaged as shown in Figure 4.

Selection 1

1 In the **Model Builder** window, expand the **Results** > **Displacement (mbd)** node.

2 Right-click **Surface** and choose **Selection**.

3 In the **Settings** window for **Selection**, locate the **Selection** section.

4 From the **Geometric entity level** list, choose **Domain**.

5 Select Domains 1, 2, 4–9, 12–19, and 22–29 only.

Surface 2

Right-click **Surface** and choose **Duplicate**.

Selection 1

1 In the **Model Builder** window, expand the **Surface 2** node, then click **Selection 1**.

2 In the **Settings** window for **Selection**, locate the **Selection** section.

3 Click **Clear Selection**.

4 Select Domains 3, 10, 11, 20, and 21 only.

Surface 2

1 In the **Model Builder** window, click **Surface 2**.

2 In the **Settings** window for **Surface**, locate the **Coloring and Style** section.

3 From the **Coloring** list, choose **Uniform**.

4 From the **Color** list, choose **Gray**.

5 Click to expand the **Title** section. From the **Title type** list, choose **None**.

Transparency 1

Right-click **Surface 2** and choose **Transparency**.

Displacement (mbd)

1 In the **Settings** window for **3D Plot Group**, locate the **Data** section.

2 From the **Time (s)** list, choose **0.04**.

3 In the **Displacement (mbd)** toolbar, click **Plot**.

Velocity (mbd)

Follow the instructions below to plot the gear positions at different gear shifts as shown in Figure 5, Figure 6, Figure 7 and Figure 8.

Gears and Shafts

1 In the **Model Builder** window, right-click **Velocity (mbd)** and choose **Duplicate**.

2 In the **Settings** window for **3D Plot Group**, type `Gears and Shafts` in the **Label** text field.

Arrow Line

1 In the **Model Builder** window, expand the **Gears and Shafts** node.

2 Right-click **Arrow Line** and choose **Delete**.

Shafts

1 In the **Settings** window for **Volume**, type `Shafts` in the **Label** text field.

2 Locate the **Coloring and Style** section. From the **Coloring** list, choose **Uniform**.

3 From the **Color** list, choose **Custom**.

4 On Windows, click the colored bar underneath, or — if you are running the cross-platform desktop — the **Color** button.

5 Click **Define custom colors**.

6 Set the RGB values to 127, 130, and 130, respectively.

7 Click **Add to custom colors**.

8 Click **Show color palette only** or **OK** on the cross-platform desktop.

Selection 1

1 Right-click **Shafts** and choose **Selection**.

2 In the **Settings** window for **Selection**, locate the **Selection** section.

3 From the **Selection** list, choose **Shafts**.

Free Rotating Gears

1 Right-click **Shafts** and choose **Duplicate**.

2 In the **Model Builder** window, click **Shafts 1**.

3 In the **Settings** window for **Volume**, type `Free Rotating Gears` in the **Label** text field.

4 Locate the **Coloring and Style** section. Click **Define custom colors**.

5 Set the RGB values to 139, 177, and 217, respectively.

6 Click **Add to custom colors**.

7 Click **Show color palette only** or **OK** on the cross-platform desktop.

Selection 1

1 In the **Model Builder** window, click **Selection 1**.

2 In the **Settings** window for **Selection**, locate the **Selection** section.

3 From the **Selection** list, choose **Fixed Gears**.

Fixed Gears

1 In the **Model Builder** window, right-click **Free Rotating Gears** and choose **Duplicate**.

2 In the **Model Builder** window, click **Free Rotating Gears 1**.

3 In the **Settings** window for **Volume**, type `Fixed Gears` in the **Label** text field.

4 Locate the **Coloring and Style** section. Click **Define custom colors**.

5 Set the RGB values to 118, 174, and 81, respectively.

6 Click **Add to custom colors**.

7 Click **Show color palette only** or **OK** on the cross-platform desktop.

Fixed Gears 1

Right-click **Fixed Gears** and choose **Duplicate**.

Selection 1

1 In the **Settings** window for **Selection**, locate the **Selection** section.

2 From the **Selection** list, choose **Free Rotating Gears**.

Sliding Gears

1 In the **Model Builder** window, expand the **Results** > **Gears and Shafts** > **Fixed Gears 1** node, then click **Fixed Gears 1**.

2 In the **Settings** window for **Volume**, type `Sliding Gears` in the **Label** text field.

3 Locate the **Coloring and Style** section. Click **Define custom colors**.

4 Set the RGB values to 214, 127, and 122, respectively.

5 Click **Add to custom colors**.

6 Click **Show color palette only** or **OK** on the cross-platform desktop.

Selection 1

1 In the **Model Builder** window, click **Selection 1**.

2 In the **Settings** window for **Selection**, locate the **Selection** section.

3 From the **Selection** list, choose **Sliding Gears**.

Gears and Shafts

1 In the **Model Builder** window, under **Results** click **Gears and Shafts**.

2 In the **Settings** window for **3D Plot Group**, locate the **Plot Settings** section.

3 Clear the **Plot dataset edges** checkbox.

4 Click to expand the **Title** section. From the **Title type** list, choose **None**.

5 Locate the **Plot Settings** section. From the **View** list, choose **New view**.

6 In the **Gears and Shafts** toolbar, click **Plot**.

Follow the instructions below to plot the angular velocity of both the shafts and the gears shown in Figure 9 and Figure 10 respectively.

Graph Plot Style 1

1 In the **Results** toolbar, click **Configurations** and choose **Graph Plot Style**.

2 In the **Settings** window for **Graph Plot Style**, locate the **Coloring and Style** section.

3 Find the **Line style** subsection. From the **Width** list, choose **2**.

Angular Velocity [Shafts]

1 In the **Results** toolbar, click **1D Plot Group**.

2 In the **Settings** window for **1D Plot Group**, type `Angular Velocity [Shafts]` in the **Label** text field.

Global 1

1 Right-click **Angular Velocity [Shafts]** and choose **Global**.

2 In the **Settings** window for **Global**, click **Add Expression** in the upper-right corner of the **y-Axis Data** section. From the menu, choose **Component 1 (comp1)** > **Multibody Dynamics** > **Hinge joints** > **Hinge Joint 6** > **mbd.hgj6.th_t - Relative angular velocity - rad/s**.

3 Click **Add Expression** in the upper-right corner of the **y-Axis Data** section. From the menu, choose **Component 1 (comp1)** > **Multibody Dynamics** > **Hinge joints** > **Hinge Joint 7** > **mbd.hgj7.th_t - Relative angular velocity - rad/s**.

4 Click to expand the **Legends** section. From the **Legends** list, choose **Manual**.

5 In the table, enter the following settings:

Legends
`Input shaft`
`Output shaft`

Angular Velocity [Shafts]

1 In the **Model Builder** window, click **Angular Velocity [Shafts]**.

2 In the **Settings** window for **1D Plot Group**, click to expand the **Title** section.

3 From the **Title type** list, choose **None**.

4 Locate the **Plot Settings** section.

5 Select the **y-axis label** checkbox. In the associated text field, type `Angular velocity (rad/s)`.

6 Click to expand the **Style Configuration** section. From the **Configuration** list, choose **Graph Plot Style 1**.

7 In the **Angular Velocity [Shafts]** toolbar, click **Plot**.

8 Click the **Zoom Extents** button in the **Graphics** toolbar.

Angular Velocity [Gears]

1 Right-click **Angular Velocity [Shafts]** and choose **Duplicate**.

2 In the **Settings** window for **1D Plot Group**, type `Angular Velocity [Gears]` in the **Label** text field.

Global 1

1 In the **Model Builder** window, expand the **Angular Velocity [Gears]** node, then click **Global 1**.

2 In the **Settings** window for **Global**, click **Replace Expression** in the upper-right corner of the **y-Axis Data** section. From the menu, choose **Component 1 (comp1)** > **Multibody Dynamics** > **Spur gears** > **Spur Gear 1 (Input)** > **Rigid body angular velocity (spatial frame) - rad/s** > **mbd.spg1.th_tx - Rigid body angular velocity, x-component**.

3 Click **Add Expression** in the upper-right corner of the **y-Axis Data** section. From the menu, choose **Component 1 (comp1)** > **Multibody Dynamics** > **Spur gears** > **Spur Gear 4 (Input)** > **Rigid body angular velocity (spatial frame) - rad/s** > **mbd.spg3.th_tx - Rigid body angular velocity, x-component**.

4 Click **Add Expression** in the upper-right corner of the **y-Axis Data** section. From the menu, choose **Component 1 (comp1)** > **Multibody Dynamics** > **Spur gears** > **Spur Gear 3 (Input)** > **Rigid body angular velocity (spatial frame) - rad/s** > **mbd.spg5.th_tx - Rigid body angular velocity, x-component**.

5 Click **Add Expression** in the upper-right corner of the **y-Axis Data** section. From the menu, choose **Component 1 (comp1)** > **Multibody Dynamics** > **Spur gears** > **Spur Gear 2 (Input)** > **Rigid body angular velocity (spatial frame) - rad/s** > **mbd.spg7.th_tx - Rigid body angular velocity, x-component**.

6 Locate the **Legends** section. In the table, enter the following settings:

Legends
Gear 1 (input)
Gear 4 (input)
Gear 3 (input)
Gear 2 (input)

Global 2

1 Right-click **Results** > **Angular Velocity [Gears]** > **Global 1** and choose **Duplicate**.

2 In the **Settings** window for **Global**, locate the **y-Axis Data** section.

3 In the table, enter the following settings:

Expression	Unit	Description
mbd.spg2.th_tx	rad/s	Rigid body angular velocity, x-component
mbd.spg4.th_tx	rad/s	Rigid body angular velocity, x-component
mbd.spg6.th_tx	rad/s	Rigid body angular velocity, x-component
mbd.spg8.th_tx	rad/s	Rigid body angular velocity, x-component

4 Locate the **Legends** section. In the table, enter the following settings:

Legends
Gear 1 (output)
Gear 4 (output)
Gear 3 (output)
Gear 2 (output)

5 Click to expand the **Coloring and Style** section. From the **Color** list, choose **Cycle (reset)**.

6 Find the **Line style** subsection. From the **Line** list, choose **Dashed**.

7 In the **Angular Velocity [Gears]** toolbar, click **Plot**.

8 Click the  **Zoom Extents** button in the **Graphics** toolbar.

Use the following instructions to plot the displacement of pin ends as shown in Figure 11.

Pin Displacement

1 In the **Results** toolbar, click **1D Plot Group**.

2 In the **Settings** window for **1D Plot Group**, type `Pin Displacement` in the **Label** text field.

3 Locate the **Title** section. From the **Title type** list, choose **None**.

4 Locate the **Plot Settings** section.

5 Select the **y-axis label** checkbox. In the associated text field, type `Displacement (cm)`.

6 Locate the **Style Configuration** section. From the **Configuration** list, choose **Graph Plot Style 1**.

Point Graph 1

1 Right-click **Pin Displacement** and choose **Point Graph**.

2 Select Points 2165 and 3079 only.

3 In the **Settings** window for **Point Graph**, locate the **y-Axis Data** section.

4 In the **Expression** text field, type `u`.

5 Click to expand the **Legends** section. Select the **Show legends** checkbox.

6 From the **Legends** list, choose **Manual**.

7 In the table, enter the following settings:

Legends
`Output Pin`
`Input Pin`

Annotation 1

1 In the **Model Builder** window, right-click **Pin Displacement** and choose **Annotation**.

2 In the **Settings** window for **Annotation**, locate the **Annotation** section.

3 In the **Text** text field, type `First Gear`.

4 Locate the **Position** section. In the **X** text field, type `0.07`.

5 In the **Y** text field, type `-2`.

6 Locate the **Coloring and Style** section. Clear the **Show point** checkbox.

7 From the **Anchor point** list, choose **Center**.

Annotation 2

1 Right-click **Annotation 1** and choose **Duplicate**.

2 In the **Settings** window for **Annotation**, locate the **Annotation** section.

3 In the **Text** text field, type `Second Gear`.

4 Locate the **Position** section. In the **X** text field, type `0.22`.

5 In the **Y** text field, type `2.2`.

Annotation 3

1 Right-click **Annotation 2** and choose **Duplicate**.

2 In the **Settings** window for **Annotation**, locate the **Annotation** section.

3 In the **Text** text field, type `Third Gear`.

4 Locate the **Position** section. In the **X** text field, type `0.535`.

Annotation 4

1 Right-click **Annotation 3** and choose **Duplicate**.

2 In the **Settings** window for **Annotation**, locate the **Annotation** section.

3 In the **Text** text field, type `Fourth Gear`.

4 Locate the **Position** section. In the **X** text field, type `1.0975`.

5 In the **Y** text field, type `-2.0`.

6 In the **Pin Displacement** toolbar, click **Plot**.

7 Click the **Zoom Extents** button in the **Graphics** toolbar.

Animation 1

1 In the **Results** toolbar, click **Animation** and choose **Player**.

2 In the **Settings** window for **Animation**, locate the **Frames** section.

3 In the **Number of frames** text field, type `200`.

Animation 2

1 Right-click **Animation 1** and choose **Duplicate**.

2 In the **Settings** window for **Animation**, locate the **Scene** section.

3 From the **Subject** list, choose **Gears and Shafts**.