Liquid-Cooled Lithium-Ion Battery Pack

This model is licensed under the COMSOL Software License Agreement 6.3.
All trademarks are the property of their respective owners. See www.comsol.com/trademarks.

Introduction

This example simulates a temperature profile in a number of cells and cooling fins in a liquid-cooled battery pack. The model solves in 3D and for an operational point during a load cycle. A full 1D electrochemical model for the lithium battery calculates the average heat source (see also Thermal Modeling of a Cylindrical Lithium-Ion Battery in 3D).

The model is based on two assumptions: The first one is that the material properties of the cooling fluid and battery material can be calculated using an average temperature for the battery pack, and the second one is that the variations in heat generation during the load cycle are significantly slower than the heat transport within the battery pack. The first assumption is valid if the temperature variations in the battery pack are small. The second assumption implies that the thermal balance is quasistationary for the given battery heat source and at a given operational point during the load cycle.

Model Definition

CELL MODEL

The 1D cell model is identical to the one used in the Thermal Modeling of a Cylindrical Lithium-Ion Battery in 3D model. The battery temperature is set to the inlet temperature of the cooling fluid. The discharge load is set to a 7.5C rate (a full discharge in 1/7.5 of an hour, 480 s).

FLOW AND HEAT TRANSFER MODEL

The model uses the Laminar Flow interface to solve for the velocity and pressure in the cooling channels and the Heat Transfer interface for the temperature field.

Geometry

The repetitive unit cell of the battery pack consists of a cooling fin with flow channels, with one battery on each side; see Figure 1. The cooling fins and batteries are 2 mm thick each, summing up to a total unit cell thickness of 6 mm.

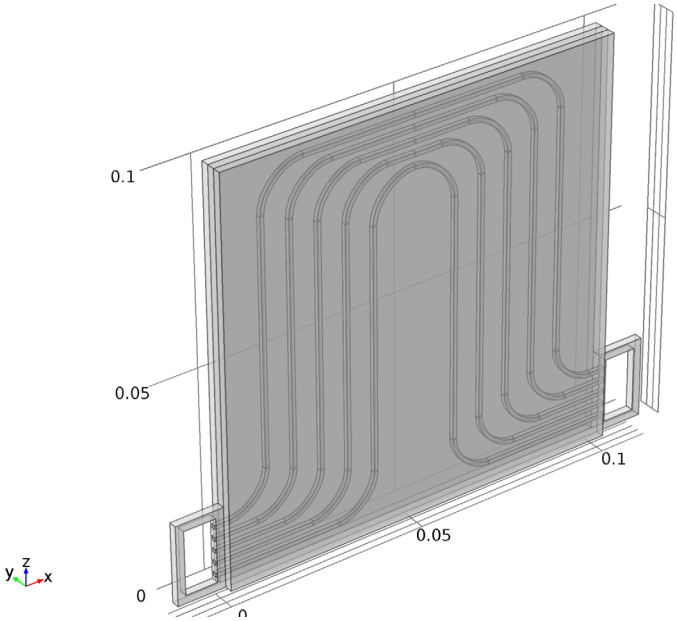

Figure 1: Unit cell of the battery pack consisting of two prismatic batteries and a cooling fin plate with five cooling channels.

The modeled battery pack geometry consists of three stacked unit cells and two flow connector channels: one on the inlet and one on the outlet side of the cooling fins (see Figure 2). The geometry represents the last cells toward the outlet end of a battery pack

(the cells of the battery pack not included in the geometry extend from $y = 0$ in the negative y direction).

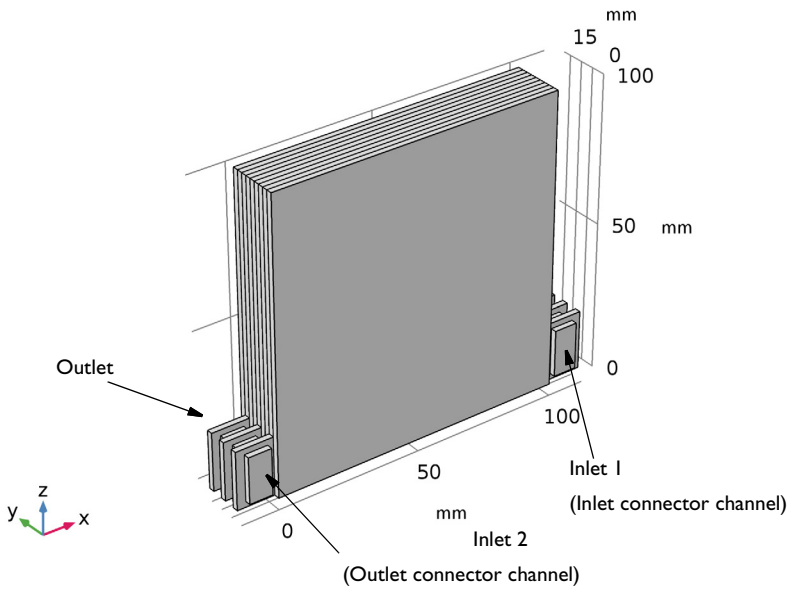

Figure 2: Battery pack geometry. Three unit cells, one inlet connector channel and one outlet connector channel.

Flow Domain Settings

The flow compartment consists of the two connector channels and the channels in the cooling fins.

The cooling fluid is modeled using the material properties of water. The fluid properties are calculated using the inlet temperature as input.

Flow Boundary Conditions

Since the cells modeled are the last ones in a larger battery pack, and the geometry being modeled is not the complete pack, the flow compartment has two inlets. The flow through the modeled cooling fin plates enters at Inlet 1, whereas the flow that have passed the cooling fins earlier in the battery pack (that are not included in the model) enter at Inlet 2.

An average flow of $\dot{Q}_{\text{fin}} = 0.5\ \text{cm}^3/\text{s}$ is assumed for each fin in the battery pack. Defining the number of modeled cooling fins as $N_{\text{fins, model}} = 3$, and the total number of cooling fins in the pack as $N_{\text{fins, pack}} = 50$, the inflow conditions are set to

$$\dot{Q}_{\text{inlet 1}} = N_{\text{fins, model}}\dot{Q}_{\text{fin}}$$
$$\dot{Q}_{\text{inlet 2}} = (N_{\text{fins, pack}} - N_{\text{fins, model}})\dot{Q}_{\text{fin}}$$

These inflows are set by using the Laminar inflow condition in the Inlet nodes.

At the outlet, atmospheric pressure is applied. All other boundaries are set to no slip conditions.

Heat Transfer Domain Settings

The temperature field is solved for in the flow compartment, the cooling fins, and the batteries.

The cooling fins are made of aluminum. The density, heat capacity, and heat source in the battery domains are set up in the same way as in the Thermal Modeling of a Cylindrical Lithium-Ion Battery in 3D model. The prismatic design of the batteries with the battery sheets primarily extending into the xz-plane results in the following values for the thermal conductivities.

$$k_{T,x} = \frac{\sum L_i k_{T,i}}{\sum L_i}$$
$$k_{T,y} = \frac{\sum L_i}{\sum L_i / k_{T,i}}$$
$$k_{T,z} = \frac{\sum L_i k_{T,i}}{\sum L_i}$$

where L_i are the thicknesses of the different layers of the cell, and $k_{T,i}$ the thermal conductivities of the materials constituting these layers.

The velocity from the flow model is used as model input for the velocity in the fluid.

Heat Transfer Boundary Conditions

At Inlet 1 an inlet temperature of 310 K for the cooling fluid is specified.

If the flow through each cooling fin is similar, and a similar amount of heat is generated in dissipated from each battery cell in the pack, the fluid temperature at the outlet of each fin will be roughly the same, resulting in a uniform temperature in the outlet cooling channel. For the boundary condition at Inlet 2, a zero temperature gradient in the normal direction

is applied (a zero conductive heat flux). This is equal to the default Thermal Insulation condition.

An outflow condition is applied at the outlet and symmetry conditions are applied to the surface of the battery facing the part of the battery pack not included in the geometry ($y = 0$).

On all other boundaries a heat flux conditions is applied with a heat transfer coefficient of 1 $W/(m^2 \cdot K)$, thus accounting for some heat being lost to the surroundings due to poor insulation.

SOLVER SEQUENCE

The model is solved sequentially in three studies, one study for each physics interface. The fluid flow is solved for first, using a constant temperature (the inlet temperature), thereby using the assumption of a uniform temperature and the properties of the cooling fluid being constant in the channels.

To calculate the average heat source from the batteries, a second study containing a time-dependent study step is defined solving the 1D battery model only. The simulation is run from the initial conditions of the battery to a desired time, in this case 60 s. The temperature in the battery model is assumed to be constant and equal to the inlet temperature of the cooling fluid.

Finally, the quasi-stationary temperature of the battery pack, at the desired time in the load cycle, is solved for in a stationary study step contained in a third study, using the flow velocity from the first study and the average heat source taken from the last time step of the time-dependent simulation from the second study.

Results and Discussion

Figure 3 shows the pressure in the fluid compartment.

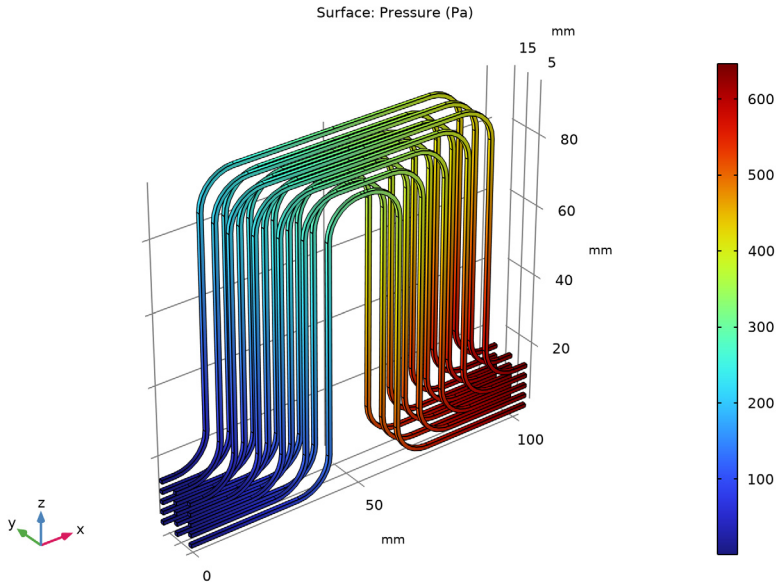

Figure 3: Pressure in the flow compartment.

The velocity magnitude in a cut plane through the middle of one of the cooling fins is shown in Figure 4. The velocity magnitude is about 0.2 m/s in the middle of the channels. This implies that the residence time for the fluid in the plates is in the range of only a few

seconds, giving support to the assumption that the battery pack reaches a quasi-stationary temperature profile quickly after a load change.

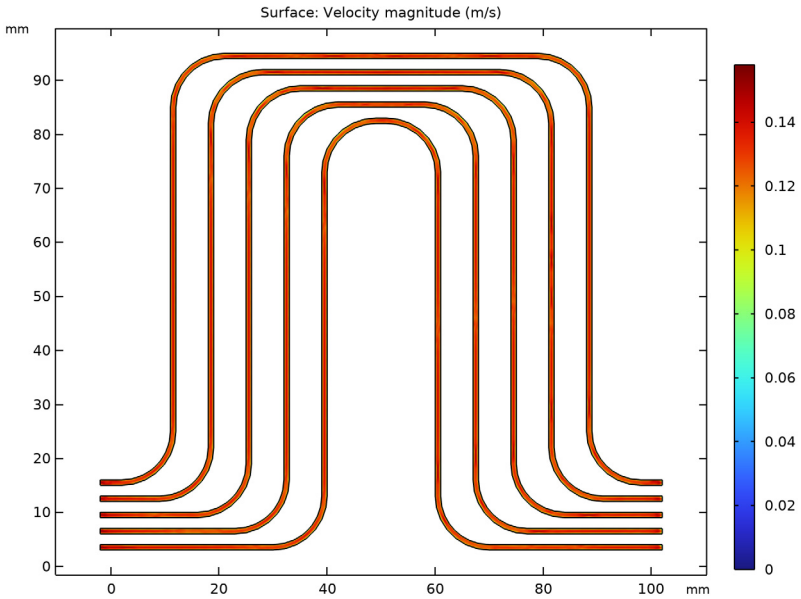

Figure 4: Velocity magnitude in the first cooling fin.

Figure 5 shows the temperature in the batteries. The difference between the highest and lowest temperature in the pack is about 3 K. The temperature variation between different

batteries along the y-axis is smaller than the temperature variation within a single battery in the xz-plane.

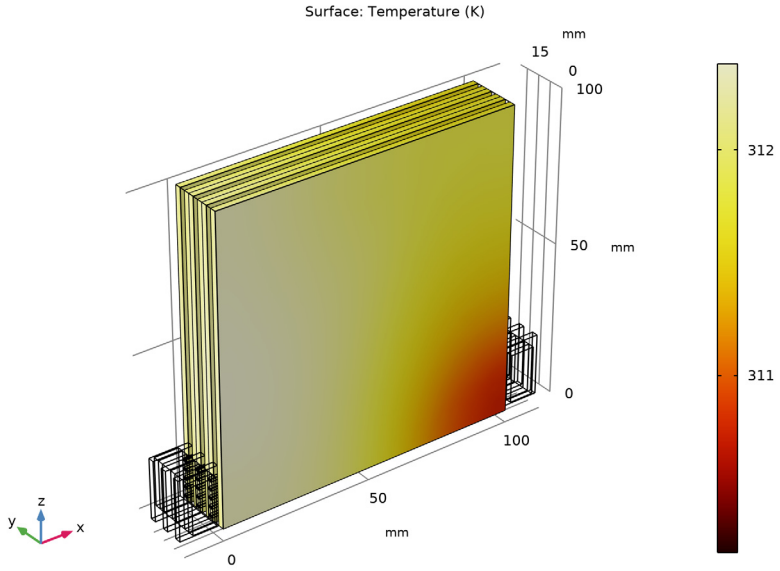

Figure 5: Temperature in the batteries.

Figure 6 plots the temperature of the cooling fluid. The temperatures are slightly lower than in the battery.

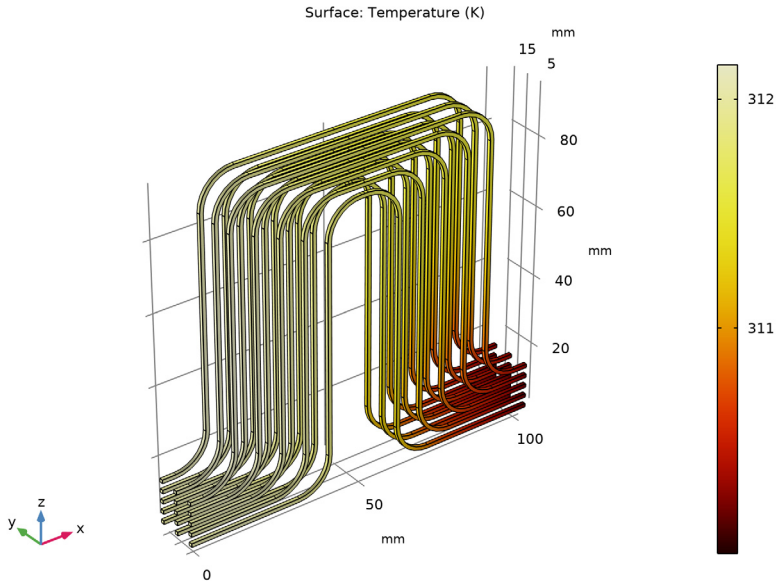

Figure 6: Temperature of the cooling liquid.

Figure 7 shows the temperature in the second battery by comparing the temperature at the surface facing the cooling fin ($y = 4$ mm) to the surface facing the third battery ($y = 6$ mm). The surface toward the cooling fin is cooler, reaching a minimum at the

corner toward the inlet. The temperature gradient over the battery is also at its maximum at this point.

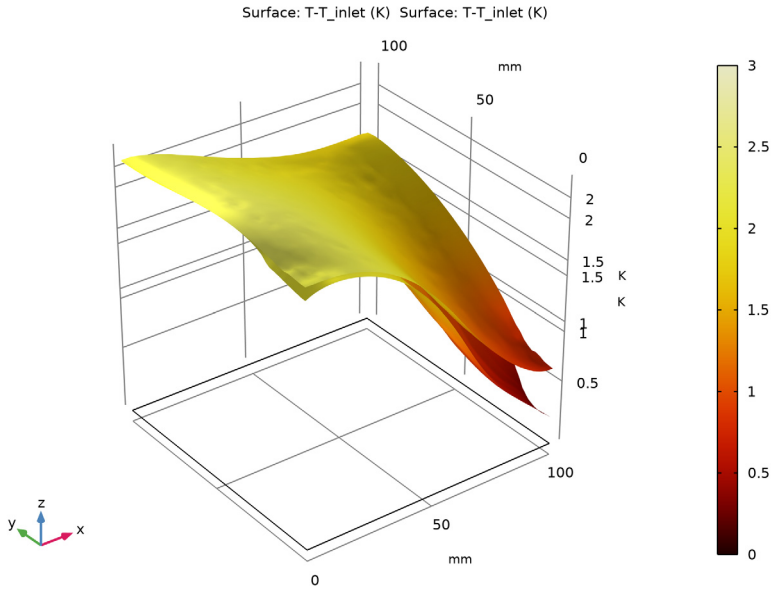

Figure 7: Temperature increase (in relation to the inlet temperature) of the second battery at the surface facing the cooling fin (y = 4 mm) and the surface facing the third battery (y = 6 mm).

Notes About the COMSOL Implementation

Enable pseudo time stepping for the Laminar Flow interface to improve convergence.

An alternative to approximating the inflow velocity profile is to change the velocity condition to Laminar inflow for the inlet boundary conditions; such an approach requires Vanka smoothing in the Multigrid solver.

Application Library path: `Battery_Design_Module/Thermal_Management/li_battery_pack_3d`

APPLICATION LIBRARIES

1 From the **File** menu, choose **Application Libraries**.

2 In the **Application Libraries** window, select **Battery Design Module** > **Thermal Management** > **li_battery_1d_for_thermal_models** in the tree.

3 Click **Open**.

ADD COMPONENT

In the **Home** toolbar, click **Add Component** and choose **3D**.

GLOBAL DEFINITIONS

Replace the parameters from the loaded model with a new set of parameters from a separate file.

Parameters 1

1 In the **Model Builder** window, under **Global Definitions** click **Parameters 1**.

2 In the **Settings** window for **Parameters**, locate the **Parameters** section.

3 Click **Clear Table**.

4 In the **Model Builder** window, click **Parameters 1**.

5 Click **Load from File**.

6 Browse to the model's Application Libraries folder and double-click the file `li_battery_pack_parameters.txt`.

GEOMETRY 2

The model geometry is available as a parameterized geometry sequence in a separate MPH-file. If you want to build it from scratch, follow the instructions in the section Appendix — Geometry Modeling Instructions. Otherwise load it from file with the following steps.

1 In the **Geometry** toolbar, click **Insert Sequence** and choose **Insert Sequence**.

2 Browse to the model's Application Libraries folder and double-click the file `li_battery_pack_3d_geom_sequence.mph`.

3 In the **Geometry** toolbar, click **Build All**.

4 Click **Build All**.

5 Click the **Transparency** button in the **Graphics** toolbar.

Turning on transparency makes the channels in the cooling fin visible.

6 Click the **Transparency** button in the **Graphics** toolbar.

DEFINITIONS (COMP2)

Variables 2

1 In the **Definitions** toolbar, click **Local Variables**.

2 In the **Settings** window for **Variables**, locate the **Variables** section.

3 In the table, enter the following settings:

Name	Expression	Unit	Description
Vol	0.2*10*10[cm^3]	m^3	Battery volume
Qh	comp1.aveop1(comp1.liion.Qh)*(L_neg+L_sep+L_pos)/L_batt		Heat source from battery model

ADD PHYSICS

1 In the **Home** toolbar, click **Add Physics** to open the **Add Physics** window.

2 Go to the **Add Physics** window.

3 In the tree, select **Fluid Flow** > **Single-Phase Flow** > **Laminar Flow (spf)**.

4 Click the **Add to Component 2** button in the window toolbar.

5 In the tree, select **Heat Transfer** > **Heat Transfer in Solids and Fluids (ht)**.

6 Click the **Add to Component 2** button in the window toolbar.

7 In the **Home** toolbar, click **Add Physics** to close the **Add Physics** window.

ADD STUDY

1 In the **Home** toolbar, click **Add Study** to open the **Add Study** window.

2 Go to the **Add Study** window.

3 Find the **Studies** subsection. In the **Select Study** tree, select **General Studies** > **Stationary**.

4 Click the **Add Study** button in the window toolbar.

5 In the **Home** toolbar, click **Add Study** to close the **Add Study** window.

GLOBAL DEFINITIONS

In the **Model Builder** window, click **Global Definitions**.

Step 1 (step1)

In the **Home** toolbar, click **Functions** and choose **Global** > **Step**.

DEFINITIONS (COMP1)

Variables 1

1 In the **Model Builder** window, under **Component 1 (comp1)** > **Definitions** click **Variables 1**.

2 In the **Settings** window for **Variables**, locate the **Variables** section.

3 In the table, enter the following settings:

Name	Expression	Unit	Description
i_app	-i_load*step1(t/1[s])	A/m²	Applied current density

SHARED PROPERTIES

Model Input 1

1 In the **Model Builder** window, expand the **Component 1 (comp1)** > **Definitions** > **Shared Properties** node, then click **Model Input 1**.

2 In the **Settings** window for **Model Input**, locate the **Definition** section.

3 In the text field, type `T_inlet`.

DEFINITIONS (COMP1)

Average 1 (aveop1)

1 In the **Definitions** toolbar, click **Nonlocal Couplings** and choose **Average**.

2 In the **Settings** window for **Average**, locate the **Source Selection** section.

3 From the **Selection** list, choose **All domains**.

MATERIALS

In the **Model Builder** window, expand the **Component 1 (comp1)** > **Materials** node, then click **Component 2 (comp2)** > **Materials**.

ADD MATERIAL

1 In the **Materials** toolbar, click **Add Material** to open the **Add Material** window.

2 Go to the **Add Material** window.

3 In the tree, select **Built-in** > **Water, liquid**.

4 Click the **Add to Component** button in the window toolbar.

5 In the tree, select **Built-in** > **Aluminum**.

6 Click the **Add to Component** button in the window toolbar.

7 In the **Materials** toolbar, click **Add Material** to close the **Add Material** window.

MATERIALS

Water, liquid (mat4)

1 In the **Settings** window for **Material**, locate the **Geometric Entity Selection** section.

2 From the **Selection** list, choose **Flow compartment**.

Aluminum (mat5)

1 In the **Model Builder** window, click **Aluminum (mat5)**.

2 In the **Settings** window for **Material**, locate the **Geometric Entity Selection** section.

3 From the **Selection** list, choose **Cooling Fins**.

GEOMETRY 2

In the **Model Builder** window, collapse the **Component 2 (comp2)** > **Geometry 2** node.

MATERIALS

1 In the **Model Builder** window, expand the **Component 2 (comp2)** > **Materials** > **Aluminum (mat5)** node, then click **Aluminum (mat5)**.

2 In the **Settings** window for **Material**, locate the **Material Contents** section.

3 In the table, enter the following settings:

Property	Variable	Value	Unit	Property group
Dynamic viscosity	mu	0	Pa·s	Basic
Heat capacity at constant pressure	Cp	`900[J/(kg*K)]`	J/(kg·K)	Basic
Thermal conductivity	k_iso ; kii = k_iso, kij = 0	`238[W/(m*K)]`	W/(m·K)	Basic
Density	rho	`2700[kg/m^3]`	kg/m³	Basic
Relative permeability	mur_iso ; murii = mur_iso, murij = 0	1	1	Basic
Electric conductivity	sigma_iso ; sigmaii = sigma_iso, sigmaij = 0	`3.774e7[S/m]`	S/m	Basic

Property	Variable	Value	Unit	Property group
Relative permittivity	epsilonr_iso ; epsilonrii = epsilonr_iso, epsilonrij = 0	1	1	Basic
Coefficient of thermal expansion	alpha_iso ; alphaii = alpha_iso, alphaij = 0	23e-6[1/K]	1/K	Basic
Young's modulus	E	70[GPa]	Pa	Young's modulus and Poisson's ratio
Poisson's ratio	nu	0.33	1	Young's modulus and Poisson's ratio
Murnaghan third-order elastic moduli	l	-250[GPa]	N/m²	Murnaghan
Murnaghan third-order elastic moduli	m	-330[GPa]	N/m²	Murnaghan
Murnaghan third-order elastic moduli	n	-350[GPa]	N/m²	Murnaghan

4 In the **Model Builder** window, collapse the **Aluminum (mat5)** node.

LAMINAR FLOW (SPF)

1 In the **Model Builder** window, under **Component 2 (comp2)** click **Laminar Flow (spf)**.

2 In the **Settings** window for **Laminar Flow**, locate the **Domain Selection** section.

3 From the **Selection** list, choose **Flow compartment**.

Inlet 1

1 In the **Physics** toolbar, click **Boundaries** and choose **Inlet**.

2 In the **Settings** window for **Inlet**, locate the **Boundary Selection** section.

3 From the **Selection** list, choose **Inlet**.

4 Locate the **Boundary Condition** section. From the list, choose **Fully developed flow**.

5 Locate the **Fully Developed Flow** section. Click the **Flow rate** button.

6 In the V_0 text field, type `N_fins_model*fin_flow`.

Inlet 2

1 In the **Physics** toolbar, click **Boundaries** and choose **Inlet**.

2 In the **Settings** window for **Inlet**, locate the **Boundary Selection** section.

3 From the **Selection** list, choose **Inlet on outlet flow connector channel**.

4 Locate the **Boundary Condition** section. From the list, choose **Fully developed flow**.

5 Locate the **Fully Developed Flow** section. Click the **Flow rate** button.

6 In the V_0 text field, type `(N_fins_pack-N_fins_model)*fin_flow`.

Outlet 1

1 In the **Physics** toolbar, click **Boundaries** and choose **Outlet**.

2 In the **Settings** window for **Outlet**, locate the **Boundary Selection** section.

3 From the **Selection** list, choose **Outlet**.

4 Locate the **Pressure Conditions** section. Select the **Normal flow** checkbox.

Initial Values 2

1 In the **Physics** toolbar, click **Domains** and choose **Initial Values**.

2 In the **Settings** window for **Initial Values**, locate the **Domain Selection** section.

3 From the **Selection** list, choose **Block 4 - Outlet flow connector channel**.

4 Locate the **Initial Values** section. Specify the $\mathbf{u}$ vector as

0	x
`(N_fins_pack-N_fins_model)*fin_flow/(8[mm]*16[mm])`	y
0	z

HEAT TRANSFER IN SOLIDS AND FLUIDS (HT)

Initial Values 1

1 In the **Model Builder** window, under **Component 2 (comp2)** > **Heat Transfer in Solids and Fluids (ht)** click **Initial Values 1**.

2 In the **Settings** window for **Initial Values**, locate the **Initial Values** section.

3 In the T text field, type `T_init`.

Fluid 1

1 In the **Model Builder** window, click **Fluid 1**.

2 In the **Settings** window for **Fluid**, locate the **Domain Selection** section.

3 From the **Selection** list, choose **Flow compartment**.

Battery Layers 1

1 In the **Physics** toolbar, click **Domains** and choose **Battery Layers**.

2 In the **Settings** window for **Battery Layers**, locate the **Domain Selection** section.

3 From the **Selection** list, choose **Array 1 - Batteries**.

4 Click the **Zoom Box** button in the **Graphics** toolbar.

5 In the **Model Builder** window, click **Battery Layers 1**.

6 Locate the **Battery Layers** section. From the **Through-layer direction** list, choose **y-axis**.

7 In the k_{tl} text field, type `kT_batt_tl`.

8 In the k_{il} text field, type `kT_batt_il`.

9 In the ρ_{eff} text field, type `rho_batt`.

10 In the $C_{p,eff}$ text field, type `Cp_batt`.

Heat Source 1

1 In the **Physics** toolbar, click **Domains** and choose **Heat Source**.

2 In the **Settings** window for **Heat Source**, locate the **Domain Selection** section.

3 From the **Selection** list, choose **Array 2 - Batteries**.

4 Locate the **Heat Source** section. In the Q_0 text field, type `Qh`.

Temperature 1

1 In the **Physics** toolbar, click **Boundaries** and choose **Temperature**.

2 In the **Settings** window for **Temperature**, locate the **Boundary Selection** section.

3 From the **Selection** list, choose **Inlet**.

4 Locate the **Temperature** section. In the T_0 text field, type `T_inlet`.

Outflow 1

1 In the **Physics** toolbar, click **Boundaries** and choose **Outflow**.

2 In the **Settings** window for **Outflow**, locate the **Boundary Selection** section.

3 From the **Selection** list, choose **Outlet**.

Heat Flux 1

1 In the **Physics** toolbar, click **Boundaries** and choose **Heat Flux**.

2 In the **Settings** window for **Heat Flux**, locate the **Boundary Selection** section.

3 From the **Selection** list, choose **External heat flux boundaries**.

4 Locate the **Heat Flux** section. From the **Flux type** list, choose **Convective heat flux**.

5 In the h text field, type `1`.

Symmetry 1

1 In the **Physics** toolbar, click **Boundaries** and choose **Symmetry**.

2 Select Boundary 122 only.

MULTIPHYSICS

Nonisothermal Flow 1 (nitf1)

In the **Physics** toolbar, click **Multiphysics Couplings** and choose **Domain** > **Nonisothermal Flow**.

MESH 2

Size 1

In the **Model Builder** window, under **Component 2 (comp2)** right-click **Mesh 2** and choose **Size**.

Size

1 In the **Settings** window for **Size**, locate the **Element Size** section.

2 Click the **Custom** button.

3 Locate the **Element Size Parameters** section. In the **Maximum element size** text field, type `0.009[m]`.

4 In the **Minimum element size** text field, type `0.00025[m]`.

Size 1

1 In the **Model Builder** window, click **Size 1**.

2 In the **Settings** window for **Size**, locate the **Geometric Entity Selection** section.

3 From the **Geometric entity level** list, choose **Domain**.

4 From the **Selection** list, choose **Flow plate channels**.

5 Locate the **Element Size** section. Click the **Custom** button.

6 Locate the **Element Size Parameters** section.

7 Select the **Resolution of narrow regions** checkbox. In the associated text field, type `0.2`.

Size 2

1 Right-click **Component 2 (comp2)** > **Mesh 2** > **Size 1** and choose **Duplicate**.

2 In the **Settings** window for **Size**, locate the **Geometric Entity Selection** section.

3 From the **Selection** list, choose **Block 5 - Inlet flow connector channel**.

4 Locate the **Element Size Parameters** section. In the **Resolution of narrow regions** text field, type `0.5`.

5 Clear the **Resolution of narrow regions** checkbox.

6 Select the **Maximum element size** checkbox. In the associated text field, type `1.9`.

Size 3

1 Right-click **Size 2** and choose **Duplicate**.

2 In the **Settings** window for **Size**, locate the **Geometric Entity Selection** section.

3 From the **Selection** list, choose **Block 4 - Outlet flow connector channel**.

Size 4

1 Right-click **Size 3** and choose **Duplicate**.

2 In the **Settings** window for **Size**, locate the **Geometric Entity Selection** section.

3 From the **Geometric entity level** list, choose **Edge**.

4 From the **Selection** list, choose **Flow plate channel inlet/outlet edges**.

5 Locate the **Element Size Parameters** section. In the **Maximum element size** text field, type `0.25`.

Free Tetrahedral 1

1 In the **Mesh** toolbar, click **Free Tetrahedral**.

2 In the **Settings** window for **Free Tetrahedral**, locate the **Domain Selection** section.

3 From the **Geometric entity level** list, choose **Domain**.

4 From the **Selection** list, choose **Flow compartment**.

Boundary Layers 1

1 In the **Mesh** toolbar, click **Boundary Layers**.

2 In the **Settings** window for **Boundary Layers**, locate the **Geometric Entity Selection** section.

3 From the **Geometric entity level** list, choose **Domain**.

4 From the **Selection** list, choose **Flow plate channels**.

Boundary Layer Properties

1 In the **Model Builder** window, click **Boundary Layer Properties**.

2 In the **Settings** window for **Boundary Layer Properties**, locate the **Boundary Selection** section.

3 From the **Selection** list, choose **Flow compartment boundaries**.

4 Locate the **Layers** section. In the **Number of layers** text field, type 2.

5 From the **Thickness specification** list, choose **First layer**.

6 In the **Thickness** text field, type `0.075`.

Free Tetrahedral 2

In the **Mesh** toolbar, click **Free Tetrahedral**.

Size 1

1 Right-click **Free Tetrahedral 2** and choose **Size**.

2 In the **Settings** window for **Size**, locate the **Element Size** section.

3 Click the **Custom** button.

4 Locate the **Element Size Parameters** section.

5 Select the **Maximum element size** checkbox. In the associated text field, type 6.

6 Click **Build All**.

STUDY 1

Solve the problem using three studies. The first study solves for the flow.

Step 1: Stationary

1 In the **Model Builder** window, under **Study 1** click **Step 1: Stationary**.

2 In the **Settings** window for **Stationary**, locate the **Physics and Variables Selection** section.

3 In the **Solve for** column of the table, under **Component 1 (comp1)**, clear the checkbox for **Lithium-Ion Battery (liion)**.

4 In the **Solve for** column of the table, under **Component 2 (comp2)**, clear the checkbox for **Heat Transfer in Solids and Fluids (ht)**.

5 Click to expand the **Results While Solving** section. From the **Probes** list, choose **None**.

The probes from the 1D model are only relevant when the Lithium-Ion Battery interface is active.

6 In the **Model Builder** window, click **Study 1**.

7 In the **Settings** window for **Study**, locate the **Study Settings** section.

8 Clear the **Generate default plots** checkbox.

9 In the **Study** toolbar, click **Compute**.

ROOT

Now create a time-dependent study to solve the battery model up to one minute into the load curve.

ADD STUDY

1 In the **Home** toolbar, click **Add Study** to open the **Add Study** window.

2 Go to the **Add Study** window.

3 Find the **Studies** subsection. In the **Select Study** tree, select **General Studies** > **Time Dependent**.

4 Click the **Add Study** button in the window toolbar.

STUDY 2

Step 1: Time Dependent

1 In the **Settings** window for **Time Dependent**, locate the **Study Settings** section.

2 In the **Output times** text field, type `range(0,60,60)`.

3 Locate the **Physics and Variables Selection** section. In the **Solve for** column of the table, under **Component 2 (comp2)**, clear the checkboxes for **Laminar Flow (spf)** and **Heat Transfer in Solids and Fluids (ht)**.

4 Click to expand the **Values of Dependent Variables** section. Find the **Values of variables not solved for** subsection. From the **Settings** list, choose **User controlled**.

Use the solution from the first study as initial values to keep the solution for the flow also in this study.

5 From the **Method** list, choose **Solution**.

6 From the **Study** list, choose **Study 1, Stationary**.

Solution 2 (sol2)

1 In the **Study** toolbar, click **Show Default Solver**.

2 In the **Model Builder** window, expand the **Solution 2 (sol2)** node.

3 In the **Model Builder** window, expand the **Study 2** > **Solver Configurations** > **Solution 2 (sol2)** > **Time-Dependent Solver 1** node, then click **Fully Coupled 1**.

4 In the **Settings** window for **Fully Coupled**, click to expand the **Method and Termination** section.

5 In the **Maximum number of iterations** text field, type `10`.

6 In the **Model Builder** window, click **Study 2**.

7 In the **Settings** window for **Study**, locate the **Study Settings** section.

8 Clear the **Generate default plots** checkbox.

9 In the **Study** toolbar, click **Compute**.

ROOT

Finally, create a last study to solve for the temperature profile.

ADD STUDY

1 Go to the **Add Study** window.

2 Find the **Studies** subsection. In the **Select Study** tree, select **General Studies** > **Stationary**.

3 Click the **Add Study** button in the window toolbar.

4 In the **Home** toolbar, click **Add Study** to close the **Add Study** window.

STUDY 3

Step 1: Stationary

1 In the **Settings** window for **Stationary**, locate the **Results While Solving** section.

2 From the **Probes** list, choose **None**.

3 Locate the **Physics and Variables Selection** section. In the **Solve for** column of the table, under **Component 1 (comp1)**, clear the checkbox for **Lithium-Ion Battery (liion)**.

4 In the **Solve for** column of the table, under **Component 2 (comp2)**, clear the checkbox for **Laminar Flow (spf)**.

5 Click to expand the **Values of Dependent Variables** section. Find the **Values of variables not solved for** subsection. From the **Settings** list, choose **User controlled**.

6 From the **Method** list, choose **Solution**.

7 From the **Study** list, choose **Study 2, Time Dependent**.

8 In the **Model Builder** window, click **Study 3**.

9 In the **Settings** window for **Study**, locate the **Study Settings** section.

10 Clear the **Generate default plots** checkbox.

11 In the **Study** toolbar, click **Compute**.

RESULTS

Study 1/Solution 1 (8) (sol1)

The following steps create a plot of the pressure in the flow compartment (Figure 3).

1 In the **Results** toolbar, click **More Datasets** and choose **Solution**.

2 In the **Settings** window for **Solution**, locate the **Solution** section.

3 From the **Solution** list, choose **Solution 3 (sol3)**.

4 From the **Component** list, choose **Component 2 (comp2)**.

Selection

1 Right-click **Study 3/Solution 3 (8) (sol3)** and choose **Selection**.

2 In the **Settings** window for **Selection**, locate the **Geometric Entity Selection** section.

3 From the **Geometric entity level** list, choose **Domain**.

4 From the **Selection** list, choose **Flow plate channels**.

5 Select the **Propagate to lower dimensions** checkbox.

3D Plot Group 2

1 In the **Results** toolbar, click **3D Plot Group**.

2 In the **Settings** window for **3D Plot Group**, locate the **Data** section.

3 From the **Dataset** list, choose **Study 3/Solution 3 (8) (sol3)**.

Surface 1

1 Right-click **3D Plot Group 2** and choose **Surface**.

2 In the **Settings** window for **Surface**, locate the **Expression** section.

3 In the **Expression** text field, type p.

4 In the **3D Plot Group 2** toolbar, click **Plot**.

5 Click the **Zoom Extents** button in the **Graphics** toolbar.

3D Plot Group 3

The following steps create a plot of the temperature in the flow compartment (Figure 6).

1 In the **Results** toolbar, click **3D Plot Group**.

2 In the **Settings** window for **3D Plot Group**, locate the **Data** section.

3 From the **Dataset** list, choose **Study 3/Solution 3 (8) (sol3)**.

Surface 1

1 Right-click **3D Plot Group 3** and choose **Surface**.

2 In the **Settings** window for **Surface**, click **Replace Expression** in the upper-right corner of the **Expression** section. From the menu, choose **Component 2 (comp2)** > **Heat Transfer in Solids and Fluids** > **Temperature** > **T - Temperature - K**.

3 Locate the **Coloring and Style** section. From the **Color table** list, choose **ThermalDark**.

4 In the **3D Plot Group 3** toolbar, click **Plot**.

5 Click the **Zoom Extents** button in the **Graphics** toolbar.

Study 1/Solution 1 (9) (sol1)

The following steps create a surface plot of the velocity magnitude in the first cooling fin (Figure 4).

1 In the **Results** toolbar, click **More Datasets** and choose **Solution**.

2 In the **Settings** window for **Solution**, locate the **Solution** section.

3 From the **Solution** list, choose **Solution 3 (sol3)**.

4 From the **Component** list, choose **Component 2 (comp2)**.

Selection

1 In the **Results** toolbar, click **Attributes** and choose **Selection**.

2 In the **Settings** window for **Selection**, locate the **Geometric Entity Selection** section.

3 From the **Geometric entity level** list, choose **Domain**.

4 From the **Selection** list, choose **Flow plate channels**.

Cut Plane 1

1 In the **Results** toolbar, click **Cut Plane**.

2 In the **Settings** window for **Cut Plane**, locate the **Data** section.

3 From the **Dataset** list, choose **Study 3/Solution 3 (9) (sol3)**.

4 Locate the **Plane Data** section. From the **Plane** list, choose **xz-planes**.

5 In the **y-coordinate** text field, type `3[mm]`.

6 Click **Plot**.

2D Plot Group 4

In the **Results** toolbar, click **2D Plot Group**.

Surface 1

1 Right-click **2D Plot Group 4** and choose **Surface**.

2 In the **2D Plot Group 4** toolbar, click **Plot**.

3 Click the **Zoom Extents** button in the **Graphics** toolbar.

Study 1/Solution 1 (10) (sol1)

The following steps create a plot of the temperature on the surface of all battery domains (Figure 5).

1 In the **Results** toolbar, click **More Datasets** and choose **Solution**.

2 In the **Settings** window for **Solution**, locate the **Solution** section.

3 From the **Solution** list, choose **Solution 3 (sol3)**.

4 From the **Component** list, choose **Component 2 (comp2)**.

Selection

1 In the **Results** toolbar, click **Attributes** and choose **Selection**.

2 In the **Settings** window for **Selection**, locate the **Geometric Entity Selection** section.

3 From the **Geometric entity level** list, choose **Domain**.

4 From the **Selection** list, choose **Array 2 - Batteries**.

5 Select the **Propagate to lower dimensions** checkbox.

3D Plot Group 5

In the **Results** toolbar, click **3D Plot Group**.

Surface 1

1 Right-click **3D Plot Group 5** and choose **Surface**.

2 In the **Settings** window for **Surface**, locate the **Data** section.

3 From the **Dataset** list, choose **Study 3/Solution 3 (10) (sol3)**.

4 Click **Replace Expression** in the upper-right corner of the **Expression** section. From the menu, choose **Component 2 (comp2)** > **Heat Transfer in Solids and Fluids** > **Temperature** > **T - Temperature - K**.

5 Locate the **Coloring and Style** section. From the **Color table** list, choose **ThermalDark**.

6 In the **3D Plot Group 5** toolbar, click **Plot**.

7 Click the **Zoom Extents** button in the **Graphics** toolbar.

Cut Plane 2

The following steps show the temperature increase of the second battery (in relation to the inlet temperature) at the surface facing the cooling fin and the surface facing the third battery (Figure 7).

1 In the **Results** toolbar, click **Cut Plane**.

2 In the **Settings** window for **Cut Plane**, locate the **Data** section.

3 From the **Dataset** list, choose **Study 3/Solution 3 (10) (sol3)**.

4 Locate the **Plane Data** section. From the **Plane** list, choose **xz-planes**.

5 In the **y-coordinate** text field, type `4[mm]`.

2D Plot Group 6

1 In the **Results** toolbar, click **2D Plot Group**.

2 In the **Settings** window for **2D Plot Group**, locate the **Data** section.

3 From the **Dataset** list, choose **Cut Plane 2**.

Surface 1

1 Right-click **2D Plot Group 6** and choose **Surface**.

2 In the **Settings** window for **Surface**, locate the **Expression** section.

3 In the **Expression** text field, type `T-T_inlet`.

4 Click to expand the **Range** section. Select the **Manual color range** checkbox.

5 In the **Maximum** text field, type `3`.

6 Locate the **Coloring and Style** section. From the **Color table** list, choose **ThermalDark**.

Height Expression 1

Right-click **Surface 1** and choose **Height Expression**.

Cut Plane 3

1 In the **Results** toolbar, click **Cut Plane**.

2 In the **Settings** window for **Cut Plane**, locate the **Data** section.

3 From the **Dataset** list, choose **Study 3/Solution 3 (10) (sol3)**.

4 Locate the **Plane Data** section. From the **Plane** list, choose **xz-planes**.

5 In the **y-coordinate** text field, type `6[mm]`.

Surface 2

1 In the **Model Builder** window, right-click **2D Plot Group 6** and choose **Surface**.

2 In the **Settings** window for **Surface**, locate the **Data** section.

3 From the **Dataset** list, choose **Cut Plane 3**.

4 Locate the **Expression** section. In the **Expression** text field, type `T-T_inlet`.

5 Locate the **Range** section. Select the **Manual color range** checkbox.

6 In the **Maximum** text field, type `3`.

7 Locate the **Coloring and Style** section. From the **Color table** list, choose **ThermalDark**.

8 Clear the **Color legend** checkbox.

Height Expression 1

1 Right-click **Surface 2** and choose **Height Expression**.

2 In the **2D Plot Group 6** toolbar, click **Plot**.

3 Click the **Zoom Extents** button in the **Graphics** toolbar.

Appendix — Geometry Modeling Instructions

From the **File** menu, choose **New**.

NEW

In the **New** window, click **Blank Model**.

GLOBAL DEFINITIONS

Parameters 1

1 In the **Model Builder** window, under **Global Definitions** click **Parameters 1**.

2 In the **Settings** window for **Parameters**, locate the **Parameters** section.

3 In the table, enter the following settings:

Name	Expression	Value	Description
`N_fins_model`	3	3	`Number of cooling fins in model`

ADD COMPONENT

In the **Home** toolbar, click **Add Component** and choose **3D**.

GEOMETRY 1

1 In the **Settings** window for **Geometry**, locate the **Units** section.

2 From the **Length unit** list, choose **mm**.

Block 1 - Batteries

1 In the **Geometry** toolbar, click **Block**.

2 In the **Settings** window for **Block**, type `Block 1 - Batteries` in the **Label** text field.

3 Locate the **Size and Shape** section. In the **Width** text field, type 100.

4 In the **Depth** text field, type 2.

5 In the **Height** text field, type 100.

Array 1 - Batteries

1 In the **Geometry** toolbar, click **Transforms** and choose **Array**.

2 Select the object **blk1** only.

3 In the **Settings** window for **Array**, locate the **Size** section.

4 In the **y size** text field, type 2.

5 In the **Label** text field, type `Array 1 - Batteries`.

6 Locate the **Displacement** section. In the **y** text field, type 4.

7 Locate the **Selections of Resulting Entities** section. Select the **Resulting objects selection** checkbox.

Array 2 - Batteries

1 In the **Geometry** toolbar, click **Transforms** and choose **Array**.

2 In the **Settings** window for **Array**, locate the **Input** section.

3 From the **Input objects** list, choose **Array 1 - Batteries**.

4 Locate the **Size** section. In the **y size** text field, type `N_fins_model`.

5 In the **Label** text field, type `Array 2 - Batteries`.

6 Locate the **Displacement** section. In the **y** text field, type `6`.

7 Locate the **Selections of Resulting Entities** section. Select the **Resulting objects selection** checkbox.

Block 2 - Cooling Fins

1 In the **Geometry** toolbar, click **Block**.

2 In the **Settings** window for **Block**, type `Block 2 - Cooling Fins` in the **Label** text field.

3 Locate the **Size and Shape** section. In the **Width** text field, type `100`.

4 In the **Depth** text field, type `2`.

5 In the **Height** text field, type `100`.

6 Locate the **Position** section. In the **y** text field, type `2`.

Block 3 (blk3)

1 In the **Geometry** toolbar, click **Block**.

2 In the **Settings** window for **Block**, locate the **Size and Shape** section.

3 In the **Width** text field, type `13`.

4 In the **Depth** text field, type `2`.

5 In the **Height** text field, type `20`.

6 Locate the **Position** section. In the **x** text field, type `-13`.

7 In the **y** text field, type `2`.

Mirror 1 (mir1)

1 In the **Geometry** toolbar, click **Transforms** and choose **Mirror**.

2 Select the object **blk3** only.

3 In the **Settings** window for **Mirror**, locate the **Point on Plane of Reflection** section.

4 In the **x** text field, type `50`.

5 Locate the **Input** section. Select the **Keep input objects** checkbox.

6 Locate the **Normal Vector to Plane of Reflection** section. In the **x** text field, type `1`.

7 In the **z** text field, type `0`.

Union 1 - Cooling Fins

1 In the **Geometry** toolbar, click **Booleans and Partitions** and choose **Union**.

2 In the **Settings** window for **Union**, type `Union 1 - Cooling Fins` in the **Label** text field.

3 Locate the **Union** section. Clear the **Keep interior boundaries** checkbox.

4 Locate the **Selections of Resulting Entities** section. Select the **Resulting objects selection** checkbox.

5 Select the objects **blk2**, **blk3**, and **mir1** only.

Work Plane 1 (wp1)

1 In the **Geometry** toolbar, click **Work Plane**.

2 In the **Settings** window for **Work Plane**, locate the **Plane Definition** section.

3 From the **Plane** list, choose **zx-plane**.

4 In the **y-coordinate** text field, type `2.5`.

Work Plane 1 (wp1) > Plane Geometry

In the **Model Builder** window, click **Plane Geometry**.

Work Plane 1 (wp1) > Rectangle 1 (r1)

1 In the **Work Plane** toolbar, click **Rectangle**.

2 In the **Settings** window for **Rectangle**, locate the **Selections of Resulting Entities** section.

3 Find the **Cumulative selection** subsection. Click **New**.

4 In the **New Cumulative Selection** dialog, type `Flow plate channels` in the **Name** text field.

5 Click **OK**.

6 In the **Settings** window for **Rectangle**, locate the **Size and Shape** section.

7 In the **Height** text field, type `32`.

8 Locate the **Position** section. In the **xw** text field, type `3`.

9 In the **yw** text field, type `-2`.

Work Plane 1 (wp1) > Rectangle 2 (r2)

1 In the **Work Plane** toolbar, click **Rectangle**.

2 In the **Settings** window for **Rectangle**, locate the **Selections of Resulting Entities** section.

3 Find the **Cumulative selection** subsection. From the **Contribute to** list, choose **Flow plate channels**.

4 Locate the **Size and Shape** section. In the **Height** text field, type `25`.

5 Locate the **Position** section. In the **xw** text field, type `6`.

6 In the **yw** text field, type -2.

Work Plane 1 (wp1) > Rectangle 3 (r3)

1 In the **Work Plane** toolbar, click **Rectangle**.

2 In the **Settings** window for **Rectangle**, locate the **Selections of Resulting Entities** section.

3 Find the **Cumulative selection** subsection. From the **Contribute to** list, choose **Flow plate channels**.

4 Locate the **Size and Shape** section. In the **Height** text field, type 18.

5 Locate the **Position** section. In the **xw** text field, type 9.

6 In the **yw** text field, type -2.

Work Plane 1 (wp1) > Rectangle 4 (r4)

1 In the **Work Plane** toolbar, click **Rectangle**.

2 In the **Settings** window for **Rectangle**, locate the **Selections of Resulting Entities** section.

3 Find the **Cumulative selection** subsection. From the **Contribute to** list, choose **Flow plate channels**.

4 Locate the **Size and Shape** section. In the **Height** text field, type 11.

5 Locate the **Position** section. In the **xw** text field, type 12.

6 In the **yw** text field, type -2.

Work Plane 1 (wp1) > Rectangle 5 (r5)

1 In the **Work Plane** toolbar, click **Rectangle**.

2 In the **Settings** window for **Rectangle**, locate the **Selections of Resulting Entities** section.

3 Find the **Cumulative selection** subsection. From the **Contribute to** list, choose **Flow plate channels**.

4 Locate the **Size and Shape** section. In the **Height** text field, type 4.

5 Locate the **Position** section. In the **xw** text field, type 15.

6 In the **yw** text field, type -2.

Work Plane 1 (wp1) > Rectangle 6 (r6)

1 In the **Work Plane** toolbar, click **Rectangle**.

2 In the **Settings** window for **Rectangle**, locate the **Selections of Resulting Entities** section.

3 Find the **Cumulative selection** subsection. From the **Contribute to** list, choose **Flow plate channels**.

4 Locate the **Size and Shape** section. In the **Width** text field, type 60.

5 Locate the **Position** section. In the **xw** text field, type 13.

6 In the **yw** text field, type 39.

Work Plane 1 (wp1) > Circle 1 (c1)

1 In the **Work Plane** toolbar, click **Circle**.

2 In the **Settings** window for **Circle**, locate the **Size and Shape** section.

3 In the **Radius** text field, type 10.

4 In the **Sector angle** text field, type 90.

5 Locate the **Position** section. In the **xw** text field, type 13.

6 In the **yw** text field, type 30.

7 Locate the **Rotation Angle** section. In the **Rotation** text field, type 90.

8 Click to expand the **Layers** section. In the table, enter the following settings:

Layer name	Thickness (mm)
Layer 1	1

9 Locate the **Object Type** section. From the **Type** list, choose **Curve**.

10 Locate the **Selections of Resulting Entities** section. Find the **Cumulative selection** subsection. From the **Contribute to** list, choose **Flow plate channels**.

Work Plane 1 (wp1) > Circle 2 (c2)

1 Right-click **Component 1 (comp1)** > **Geometry 1** > **Work Plane 1 (wp1)** > **Plane Geometry** > **Circle 1 (c1)** and choose **Duplicate**.

2 In the **Settings** window for **Circle**, locate the **Position** section.

3 In the **xw** text field, type 73.

4 In the **yw** text field, type 49.

5 Locate the **Rotation Angle** section. In the **Rotation** text field, type -90.

6 Click **Build Selected**.

Work Plane 1 (wp1) > Delete Entities 1 (del1)

1 In the **Work Plane** toolbar, click **Delete**.

2 In the **Settings** window for **Delete Entities**, locate the **Entities or Objects to Delete** section.

3 From the **Geometric entity level** list, choose **Boundary**.

4 On the object **c1**, select Boundaries 1 and 2 only.

5 On the object **c2**, select Boundaries 1 and 2 only.

Work Plane 1 (wp1) > Copy 1 (copy1)

1 In the **Work Plane** toolbar, click **Transforms** and choose **Copy**.

2 Select the objects **del1(1)**, **del1(2)**, and ***r6*** only.

3 In the **Settings** window for **Copy**, locate the **Displacement** section.

4 In the **xw** text field, type `3,6,9,12`.

5 In the **yw** text field, type `-7,-14,-21,-28`.

6 Locate the **Selections of Resulting Entities** section. Find the **Cumulative selection** subsection. From the **Contribute to** list, choose **Flow plate channels**.

Work Plane 1 (wp1) > Rectangle 7 (r7)

1 In the **Work Plane** toolbar, click **Rectangle**.

2 In the **Settings** window for **Rectangle**, locate the **Position** section.

3 In the **xw** text field, type `82`.

4 In the **yw** text field, type `50`.

5 Locate the **Selections of Resulting Entities** section. Find the **Cumulative selection** subsection. From the **Contribute to** list, choose **Flow plate channels**.

Work Plane 1 (wp1) > Rectangle 8 (r8)

1 In the **Work Plane** toolbar, click **Rectangle**.

2 In the **Settings** window for **Rectangle**, locate the **Size and Shape** section.

3 In the **Height** text field, type `8`.

4 Locate the **Position** section. In the **xw** text field, type `85`.

5 In the **yw** text field, type `50`.

6 Locate the **Selections of Resulting Entities** section. Find the **Cumulative selection** subsection. From the **Contribute to** list, choose **Flow plate channels**.

Work Plane 1 (wp1) > Rectangle 9 (r9)

1 In the **Work Plane** toolbar, click **Rectangle**.

2 In the **Settings** window for **Rectangle**, locate the **Size and Shape** section.

3 In the **Height** text field, type `15`.

4 Locate the **Position** section. In the **xw** text field, type `88`.

5 In the **yw** text field, type `50`.

6 Locate the **Selections of Resulting Entities** section. Find the **Cumulative selection** subsection. From the **Contribute to** list, choose **Flow plate channels**.

Work Plane 1 (wp1) > Rectangle 10 (r10)

1 In the **Work Plane** toolbar, click **Rectangle**.

2 In the **Settings** window for **Rectangle**, locate the **Size and Shape** section.

3 In the **Height** text field, type 22.

4 Locate the **Position** section. In the **xw** text field, type 91.

5 In the **yw** text field, type 50.

6 Locate the **Selections of Resulting Entities** section. Find the **Cumulative selection** subsection. From the **Contribute to** list, choose **Flow plate channels**.

Work Plane 1 (wp1) > Rectangle 11 (r11)

1 In the **Work Plane** toolbar, click **Rectangle**.

2 In the **Settings** window for **Rectangle**, locate the **Size and Shape** section.

3 In the **Height** text field, type 29.

4 Locate the **Position** section. In the **xw** text field, type 94.

5 In the **yw** text field, type 50.

6 Locate the **Selections of Resulting Entities** section. Find the **Cumulative selection** subsection. From the **Contribute to** list, choose **Flow plate channels**.

Work Plane 1 (wp1) > Mirror 1 (mir1)

1 In the **Work Plane** toolbar, click **Transforms** and choose **Mirror**.

2 In the **Settings** window for **Mirror**, locate the **Input** section.

3 From the **Input objects** list, choose **Flow plate channels**.

4 Select the **Keep input objects** checkbox.

5 Locate the **Point on Line of Reflection** section. In the **yw** text field, type 50.

6 Locate the **Normal Vector to Line of Reflection** section. In the **xw** text field, type 0.

7 In the **yw** text field, type 1.

8 Locate the **Selections of Resulting Entities** section. Find the **Cumulative selection** subsection. From the **Contribute to** list, choose **Flow plate channels**.

Work Plane 1 (wp1) > Union 1 (uni1)

1 In the **Work Plane** toolbar, click **Booleans and Partitions** and choose **Union**.

2 In the **Settings** window for **Union**, locate the **Union** section.

3 From the **Input objects** list, choose **Flow plate channels**.

4 Clear the **Keep interior boundaries** checkbox.

Extrude 1 - Flow plate channels

1 In the **Model Builder** window, under **Component 1 (comp1)** > **Geometry 1** right-click **Work Plane 1 (wp1)** and choose **Extrude**.

2 In the **Settings** window for **Extrude**, type `Extrude 1 - Flow plate channels` in the **Label** text field.

3 Locate the **Selections of Resulting Entities** section. Select the **Resulting objects selection** checkbox.

Array 3 - Cooling Fins

1 In the **Geometry** toolbar, click **Transforms** and choose **Array**.

2 In the **Settings** window for **Array**, type `Array 3 - Cooling Fins` in the **Label** text field.

3 Select the object **uni1** only.

4 Locate the **Size** section. In the **y size** text field, type `N_fins_model`.

5 Locate the **Displacement** section. In the **y** text field, type `6`.

6 Locate the **Selections of Resulting Entities** section. Select the **Resulting objects selection** checkbox.

Array 4 - Flow plate channels

1 In the **Geometry** toolbar, click **Transforms** and choose **Array**.

2 In the **Settings** window for **Array**, locate the **Input** section.

3 From the **Input objects** list, choose **Extrude 1 - Flow plate channels**.

4 In the **Label** text field, type `Array 4 - Flow plate channels`.

5 Locate the **Size** section. In the **y size** text field, type `N_fins_model`.

6 Locate the **Displacement** section. In the **y** text field, type `6`.

7 Locate the **Selections of Resulting Entities** section. Select the **Resulting objects selection** checkbox.

Block 4 - Outlet flow connector channel

1 In the **Geometry** toolbar, click **Block**.

2 In the **Settings** window for **Block**, locate the **Selections of Resulting Entities** section.

3 Select the **Resulting objects selection** checkbox.

4 In the **Label** text field, type `Block 4 - Outlet flow connector channel`.

5 Locate the **Size and Shape** section. In the **Width** text field, type `8`.

6 In the **Depth** text field, type `18`.

7 In the **Height** text field, type `16`.

8 Locate the **Position** section. In the **x** text field, type `-10`.

9 In the **z** text field, type `2`.

Block 5 - Inlet flow connector channel

1 In the **Geometry** toolbar, click **Block**.

2 In the **Settings** window for **Block**, locate the **Selections of Resulting Entities** section.

3 Select the **Resulting objects selection** checkbox.

4 In the **Label** text field, type `Block 5 - Inlet flow connector channel`.

5 Locate the **Size and Shape** section. In the **Width** text field, type `8`.

6 In the **Depth** text field, type `16`.

7 In the **Height** text field, type `16`.

8 Locate the **Position** section. In the **x** text field, type `102`.

9 In the **z** text field, type `2`.

Difference 1 (dif1)

1 In the **Geometry** toolbar, click **Booleans and Partitions** and choose **Difference**.

2 In the **Settings** window for **Difference**, locate the **Difference** section.

3 From the **Objects to add** list, choose **Array 3 - Cooling Fins**.

4 Click to select the **Activate Selection** toggle button for **Objects to subtract**.

5 Select the objects **blk4** and **blk5** only.

6 Select the **Keep objects to subtract** checkbox.

7 Click **Build Selected**.

Form Union (fin)

1 In the **Model Builder** window, click **Form Union (fin)**.

2 In the **Settings** window for **Form Union/Assembly**, click **Build Selected**.

3 Click the **Wireframe Rendering** button in the **Graphics** toolbar.

Cooling Fins

1 In the **Geometry** toolbar, click **Selections** and choose **Difference Selection**.

2 In the **Settings** window for **Difference Selection**, type `Cooling Fins` in the **Label** text field.

3 Locate the **Input Entities** section. Click the **Add** button for **Selections to add**.

4 In the **Add** dialog, select **Array 3 - Cooling Fins** in the **Selections to add** list.

5 Click **OK**.

6 In the **Settings** window for **Difference Selection**, locate the **Input Entities** section.

7 Click the + **Add** button for **Selections to subtract**.

8 In the **Add** dialog, select **Array 4 - Flow plate channels** in the **Selections to subtract** list.

9 Click **OK**.

Flow compartment

1 In the **Geometry** toolbar, click **Selections** and choose **Union Selection**.

2 In the **Settings** window for **Union Selection**, type `Flow compartment` in the **Label** text field.

3 Locate the **Input Entities** section. Click + **Add**.

4 In the **Add** dialog, in the **Selections to add** list, choose **Array 4 - Flow plate channels**, **Block 4 - Outlet flow connector channel**, and **Block 5 - Inlet flow connector channel**.

5 Click **OK**.

Flow compartment boundaries

1 In the **Geometry** toolbar, click **Selections** and choose **Adjacent Selection**.

2 In the **Settings** window for **Adjacent Selection**, type `Flow compartment boundaries` in the **Label** text field.

3 Locate the **Input Entities** section. Click + **Add**.

4 In the **Add** dialog, select **Flow compartment** in the **Input selections** list.

5 Click **OK**.

Inlet

1 In the **Geometry** toolbar, click **Selections** and choose **Explicit Selection**.

2 In the **Settings** window for **Explicit Selection**, type `Inlet` in the **Label** text field.

3 Locate the **Entities to Select** section. From the **Geometric entity level** list, choose **Boundary**.

4 On the object **fin**, select Boundary 450 only.

Outlet

1 In the **Geometry** toolbar, click **Selections** and choose **Explicit Selection**.

2 In the **Settings** window for **Explicit Selection**, type `Outlet` in the **Label** text field.

3 Locate the **Entities to Select** section. From the **Geometric entity level** list, choose **Boundary**.

4 On the object **fin**, select Boundary 38 only.

Inlet on outlet flow connector channel

1 In the **Geometry** toolbar, click **Selections** and choose **Explicit Selection**.

2 In the **Settings** window for **Explicit Selection**, type `Inlet on outlet flow connector channel` in the **Label** text field.

3 Locate the **Entities to Select** section. From the **Geometric entity level** list, choose **Boundary**.

4 On the object **fin**, select Boundary 17 only.

Boundary toward battery pack

1 In the **Geometry** toolbar, click **Selections** and choose **Explicit Selection**.

2 In the **Settings** window for **Explicit Selection**, type `Boundary toward battery pack` in the **Label** text field.

3 Locate the **Entities to Select** section. From the **Geometric entity level** list, choose **Boundary**.

4 On the object **fin**, select Boundary 122 only.

Geometry

1 In the **Geometry** toolbar, click **Selections** and choose **Explicit Selection**.

2 In the **Settings** window for **Explicit Selection**, type `Geometry` in the **Label** text field.

3 Locate the **Entities to Select** section. From the **Geometric entity level** list, choose **Object**.

4 Select the object **fin** only.

All external boundaries

1 In the **Geometry** toolbar, click **Selections** and choose **Adjacent Selection**.

2 In the **Settings** window for **Adjacent Selection**, type `All external boundaries` in the **Label** text field.

3 Locate the **Input Entities** section. Click **Add**.

4 In the **Add** dialog, select **Geometry** in the **Input selections** list.

5 Click **OK**.

Difference Selection 2 (difsel2)

In the **Geometry** toolbar, click **Selections** and choose **Difference Selection**.

Difference Selection 3 (difsel3)

In the **Geometry** toolbar, click **Selections** and choose **Difference Selection**.

External heat flux boundaries

1 In the **Model Builder** window, under **Component 1 (comp1)** > **Geometry 1** click **Difference Selection 2 (difsel2)**.

2 In the **Settings** window for **Difference Selection**, type `External heat flux boundaries` in the **Label** text field.

3 Locate the **Geometric Entity Level** section. From the **Level** list, choose **Boundary**.

4 Locate the **Input Entities** section. Click the **Add** button for **Selections to add**.

5 In the **Add** dialog, select **All external boundaries** in the **Selections to add** list.

6 Click **OK**.

7 In the **Settings** window for **Difference Selection**, locate the **Input Entities** section.

8 Click the **Add** button for **Selections to subtract**.

9 In the **Add** dialog, in the **Selections to subtract** list, choose **Inlet**, **Outlet**, **Inlet on outlet flow connector channel**, and **Boundary toward battery pack**.

10 Click **OK**.

11 In the **Geometry** toolbar, click **Build All**.

Flow plate channels

1 In the **Model Builder** window, under **Component 1 (comp1)** > **Geometry 1** click **Difference Selection 3 (difsel3)**.

2 In the **Settings** window for **Difference Selection**, type `Flow plate channels` in the **Label** text field.

3 Locate the **Input Entities** section. Click the **Add** button for **Selections to add**.

4 In the **Add** dialog, select **Flow compartment** in the **Selections to add** list.

5 Click **OK**.

6 In the **Settings** window for **Difference Selection**, locate the **Input Entities** section.

7 Click the **Add** button for **Selections to subtract**.

8 In the **Add** dialog, in the **Selections to subtract** list, choose **Block 4 - Outlet flow connector channel** and **Block 5 - Inlet flow connector channel**.

9 Click **OK**.

Flow plate channel boundaries

1 In the **Geometry** toolbar, click **Selections** and choose **Adjacent Selection**.

2 In the **Settings** window for **Adjacent Selection**, type `Flow plate channel boundaries` in the **Label** text field.

3 Locate the **Input Entities** section. Click **Add**.

4 In the **Add** dialog, select **Flow plate channels** in the **Input selections** list.

5 Click **OK**.

Flow connector channel boundaries

1 In the **Geometry** toolbar, click **Selections** and choose **Adjacent Selection**.

2 In the **Settings** window for **Adjacent Selection**, type `Flow connector channel boundaries` in the **Label** text field.

3 Locate the **Input Entities** section. Click **Add**.

4 In the **Add** dialog, in the **Input selections** list, choose **Block 4 - Outlet flow connector channel** and **Block 5 - Inlet flow connector channel**.

5 Click **OK**.

Flow plate channel inlet/outlet boundaries

1 In the **Geometry** toolbar, click **Selections** and choose **Intersection Selection**.

2 In the **Settings** window for **Intersection Selection**, type `Flow plate channel inlet/outlet boundaries` in the **Label** text field.

3 Locate the **Geometric Entity Level** section. From the **Level** list, choose **Boundary**.

4 Locate the **Input Entities** section. Click **Add**.

5 In the **Add** dialog, in the **Selections to intersect** list, choose **Flow plate channel boundaries** and **Flow connector channel boundaries**.

6 Click **OK**.

Flow plate channel inlet/outlet edges

1 In the **Geometry** toolbar, click **Selections** and choose **Adjacent Selection**.

2 In the **Settings** window for **Adjacent Selection**, type `Flow plate channel inlet/outlet edges` in the **Label** text field.

3 Locate the **Input Entities** section. From the **Geometric entity level** list, choose **Boundary**.

4 Click **Add**.

5 In the **Add** dialog, select **Flow plate channel inlet/outlet boundaries** in the **Input selections** list.

6 Click **OK**.

7 In the **Settings** window for **Adjacent Selection**, locate the **Output Entities** section.

8 From the **Geometric entity level** list, choose **Adjacent edges**.

Boundaries for boundary layer mesh

1 In the **Geometry** toolbar, click **Selections** and choose **Difference Selection**.

2 In the **Settings** window for **Difference Selection**, type `Boundaries for boundary layer mesh` in the **Label** text field.

3 Locate the **Geometric Entity Level** section. From the **Level** list, choose **Boundary**.

4 Locate the **Input Entities** section. Click the + **Add** button for **Selections to add**.

5 In the **Add** dialog, select **Flow compartment boundaries** in the **Selections to add** list.

6 Click **OK**.

7 In the **Settings** window for **Difference Selection**, locate the **Input Entities** section.

8 Click the + **Add** button for **Selections to subtract**.

9 In the **Add** dialog, in the **Selections to subtract** list, choose **Inlet**, **Outlet**, and **Inlet on outlet flow connector channel**.

10 Click **OK**.