COMSOL Multiphysics

Reference Manual

5.5

COMSOL

COMSOL Multiphysics Reference Manual

© 1998–2019 COMSOL

Protected by patents listed on www.comsol.com/patents, and U.S. Patents 7,519,518; 7,596,474; 7,623,991; 8,457,932; 8,954,302; 9,098,106; 9,146,652; 9,323,503; 9,372,673; 9,454,625; and 10,019,544. Patents pending.

This Documentation and the Programs described herein are furnished under the COMSOL Software License Agreement (www.comsol.com/comsol-license-agreement) and may be used or copied only under the terms of the license agreement.

COMSOL, the COMSOL logo, COMSOL Multiphysics, COMSOL Desktop, COMSOL Compiler, COMSOL Server, and LiveLink are either registered trademarks or trademarks of COMSOL AB. All other trademarks are the property of their respective owners, and COMSOL AB and its subsidiaries and products are not affiliated with, endorsed by, sponsored by, or supported by those trademark owners. For a list of such trademark owners, see www.comsol.com/trademarks.

Version: COMSOL 5.5

Contact Information

Visit the Contact COMSOL page at www.comsol.com/contact to submit general inquiries, contact Technical Support, or search for an address and phone number. You can also visit the Worldwide Sales Offices page at www.comsol.com/contact/offices for address and contact information.

If you need to contact Support, an online request form is located at the COMSOL Access page at www.comsol.com/support/case. Other useful links include:

- Support Center: www.comsol.com/support
- Product Download: www.comsol.com/product-download
- Product Updates: www.comsol.com/support/updates
- COMSOL Blog: www.comsol.com/blogs
- Discussion Forum: www.comsol.com/community
- Events: www.comsol.com/events
- COMSOL Video Gallery: www.comsol.com/video
- Support Knowledge Base: www.comsol.com/support/knowledgebase

Part number: CM020005

Contents

Chapter 1: Introduction

About COMSOL Multiphysics **39**
The COMSOL Multiphysics Modules and Interfacing Options 40

COMSOL Documentation and Help **41**
About the Documentation Set 41
The Help Window and Topic-Based Help 43
The Documentation Window 46
Searching Help and Documentation Content 47
The About COMSOL Multiphysics Box 49
Checking for Product Software Updates 50
Typographical Conventions 50

Overview of the Reference Manual **53**

Chapter 2: The COMSOL Modeling Environment

The COMSOL Desktop **58**
Basic Navigation 61
Adjusting Window Location and Size on the Desktop 62
The COMSOL Desktop Windows 66
The COMSOL Desktop Menus and Toolbars 68
Windows Toolbars and Menus 68
Cross Platform (macOS and Linux) Toolbars and Menus 69
Features Available on Toolbars and From Menus 70
The Messages Window 75
About the COMSOL Model File Formats 76
Saving COMSOL Files 77
Saving and Opening Recovery Files 79
The Root Settings and Properties Windows 80
Unit Systems 81
Searching and Finding Text 82

The Application Libraries Window **84**
The Applications Folders 86
Running or Opening a Model or Application and Its Documentation . . . 86
Downloading MPH-Files With or Without Solutions 88
Searching the Application Libraries 88
The Application Library Update Window 90
The Part Library Update Window 92

The Physics Interfaces **93**
Introduction to the Physics Interfaces 93
Physics Groups and Subgroups 93
Adding and Inserting Physics Interfaces 96
Physics Interface Guide 98
Common Physics Interface and Feature Settings and Nodes 101

Creating a New Model **105**
Open a New Window to Begin Modeling . . . 105
The Model Wizard . . . 105

Toolbars and Keyboard Shortcuts **110**
Home Toolbar . . . 110
Definitions Toolbar . . . 113
Geometry Toolbar . . . 115
Sketch Toolbar . . . 119
Work Plane Modal Toolbar . . . 121
Materials Toolbar . . . 122
Physics Toolbar . . . 123
0D Component Toolbar . . . 124
Mesh Toolbar . . . 125
Study Toolbar . . . 127
Results Toolbar . . . 128
Plot Group Contextual Toolbar . . . 131
Report Group Contextual Toolbar . . . 132
Template Group Contextual Toolbar . . . 133
View Toolbar . . . 133
Developer Toolbar . . . 134
Keyboard Shortcuts . . . 135

Chapter 3: Building a COMSOL Multiphysics Model

Building Models in the Model Builder **141**
The Model Builder . . . 141
About the Sequence of Operations . . . 142
The Global Definitions Node . . . 142
The Component Node . . . 142
Adding Extra Dimensions to a Model . . . 146
Branches and Subbranches in the Tree Structure . . . 147
Settings and Properties Windows for Feature Nodes . . . 150
Displaying Node Names, Tags, and Types in the Model Builder . . . 152
Opening Context Menus and Adding Nodes . . . 154
The Physics Nodes . . . 155
Physics Interface Default Nodes . . . 157
Physics Interface Node Context Menu Layout . . . 157
Physics Exclusive and Contributing Node Types . . . 159
Physics Node Status . . . 161
Dynamic Nodes in the Model Builder . . . 162
Physics Symbols . . . 164
Errors and Warnings . . . 167

Modeling Development Tools **170**
Overview . . . 170
Creating and Running Methods in Models . . . 170
Method Calls . . . 171
Creating and Using Settings Forms and Dialogs . . . 171
Creating Add-ins . . . 172
Using Add-ins . . . 172
The Add-in Libraries Window . . . 172

Comparing Models and Applications 173

Working with Nodes in the Model Builder **175**
Moving Nodes in the Model Builder 175
Copying, Pasting, and Duplicating Nodes 175
Undoing and Redoing Operations 177
Going to the Source Node 177
Clearing Sequences and Deleting Sequences or Nodes 178
Disabling or Enabling Nodes 178

Modeling Guidelines **180**
Selecting Physics Interfaces 180
Using Symmetries 181
Effective Memory Management 181
Selecting an Element Type 182
Analyzing Model Convergence and Accuracy 183
Achieving Convergence When Solving Nonlinear Equations 183
Avoiding Strong Transients 184
Physics-Related Checks and Guidelines 184
Results With Unphysical Values 185

Multiphysics Modeling Workflow **188**
Creating a Multiphysics Model 188
Advantages of Using the Predefined Multiphysics Interfaces 190
The Add Multiphysics Window 190
The Multiphysics Branch 191
Uncoupling a Multiphysics Coupling 191
Model Inputs and Multiphysics Couplings 192

Specifying Model Equation Settings **194**
Specifying Equation Coefficients and Material Properties 194
Modeling Anisotropic Materials 195
Specifying Initial Values 195
Equation View 196
Physics Nodes — Equation Section 199

Boundary Conditions **201**
Boundary Condition Types 201
Physics Interface Boundary Types 203
Continuity on Interior Boundaries 203
Physics Interface Axial Symmetry Node 204
Constraint Reaction Terms 204
Constraint Settings 205
Excluded Surfaces, Excluded Edges, and Excluded Points 206
Weak Constraints 206
Periodic Boundary Conditions 208

Computing Accurate Fluxes **211**
Flux Computation Methods 211
Flux Calculation Example — Heat Transfer Model 212

Using Load Cases **214**
About Load Cases 214
Defining Load Groups and Constraint Groups 214

Load Group 216
Constraint Group 216
Defining and Evaluating Load Cases 217

Numerical Stabilization **219**
About Numerical Stabilization in COMSOL 219
Consistent Stabilization and Inconsistent Stabilization Sections on Settings Windows 219
An Example of Stabilization 220
Stabilization Techniques 222
References for Stabilization Techniques 225

Using Units **226**
Using Standard Unit Prefixes and Syntax 226
SI Base, Derived, and Other Units 228
Special British Engineering Units 232
Special CGSA Units 232
Special EMU Units 233
Special ESU Units 233
Special FPS Units 234
Special IPS Units 234
Special MPa Units 234
Special Gravitational IPS Units 235
Switching Unit System 235
About Temperature Units 235
About Editing Geometry Length and Angular Units 236
Units and Space Dimensions 237

Chapter 4: Customizing the COMSOL Desktop

Customizing a Model **240**
Customizing the Desktop Layout 240
Changing Fonts and the Desktop Language 241
Editing Node Properties, Names, and Labels 241
Custom Grouping of Nodes 243
Grouping Nodes by Space Dimension and Type 244
Setting the Unit System for Models 246
Checking and Controlling Products and Licenses Used 246

Preferences Settings **248**
The Preferences Dialog Box 248
Importing and Exporting Preferences 249

Showing More Options **250**

Chapter 5: Global and Local Definitions

Global Definitions, Geometry, Mesh, and Materials **254**
Global Definitions 254
Geometry Parts 254
Mesh Parts 255
Global Materials 255

Definitions **256**
About Parameters, Variables, Variable Utilities, and Expressions 257
Parameters 258
Parameter Cases 260
Variables 260
Variable Utilities 262
Expression Operator 262
Operator Contribution 263
Default Model Inputs 263
Model Input 265
State Variables 265
Participation Factors 266
Response Spectrum 266
Common Settings for the Definitions Nodes 267

Operators, Functions, and Constants **269**
Unary, Binary, and List Operators and Their Precedence Rules 269
Mathematical and Numerical Constants 270
Mathematical Functions 270
Physical Constants 272
Built-In Operators 273

Predefined and Built-In Variables **293**
Predefined Physics Variables. 293
Variable Naming Convention and Namespace 293
Variable Classification and Geometric Scope 294
Built-In Global Variables 294
Geometric Variables, Mesh Variables, and Variables Created by Frames . 296
Material Group Indicator Variables 301
Shape Function Variables 302
Solver Variables 304
Entering Ranges and Vector-Valued Expressions 304
Summary of Built-In Variables With Reserved Names 306

Mass Properties **313**
Introduction. 313
Mass Properties 313
Mass Contributions 315

Functions **316**
Switch for Functions 316
About User-Defined Functions 317
Common Settings for the Function Nodes 317
Analytic 319
Elevation (DEM) 319
External 320
Gaussian Pulse 321
Image 321
Interpolation 322
MATLAB 328
Piecewise. 328
Ramp 330
Random 330
Rectangle. 331

Step 331
Thermodynamics Property Package 332
Triangle 332
Waveform 332
Specifying Discontinuous Functions 333

Matrices and Matrix Operations **335**
Matrix 335
Matrix Inverse 335
Matrix Diagonalization 336
Matrix Decomposition (SVD) 337
Vector Transform 338
Matrix Transform 339
Tensors in COMSOL Multiphysics 341

Nonlocal Couplings and Coupling Operators **345**
About Nonlocal Couplings 345
General Extrusion 351
Linear Extrusion 352
Boundary Similarity 352
One-Point Map 353
Two-Point Map 353
Edge Map 354
Identity Mapping 354
General Projection 354
Linear Projection 355
Integration 356
Average 357
Maximum and Minimum 357
Common Settings for Nonlocal Couplings 358

Coordinate Systems **360**
About Coordinate Systems 360
Base Vector System 361
Boundary System 363
Reverse Normal 364
Domain Normal 364
Combined System 365
Composite System 365
Cylindrical System 366
Mapped System 367
Rotated System 367
Scaling System 369
Spherical System 370
System from Geometry 371

Identity and Contact Pairs **372**
About Identity and Contact Pairs 372
Identity Pairs 373
Contact Pair 375

Probes **377**
About Probes 377
Common Settings for Probes 378

Domain Probe, Boundary Probe, and Edge Probe 379
Domain Point Probe 380
Boundary Point Probe 381
Point Probe Expression 381
Global Variable Probe 381

Infinite Elements, Perfectly Matched Layers, and Absorbing Layers 382
Simulation of Infinite Domains 382
Standard Geometry Configurations 383
Manual Settings for Nonstandard Geometries 386
Note on Availability 387
PML Implementation 387
PMLs in Multiphysics 389
Perfectly Matched Layer 389
Known Issues When Modeling Using PMLs 391
Infinite Element Implementation 392
Infinite Element Domain 393
Known Issues When Modeling Using Infinite Elements 394
Absorbing Layer 395
References for PMLs and Infinite Element Domains 396

Reduced-Order Modeling 397
Introduction. 397
Reduced-Order . . . . . Model Inputs 397
Reduced-Order Model Outputs 398
Modal Reduced-Order Models. 399
Global Reduced Model Inputs 400
Frequency Domain, Modal Reduced-Order Model 401
Time Dependent, Modal Reduced-Order Model 402
Frequency Domain, AWE Reduced-Order Model 403
Random Vibration 404
Importing Reduced-Order Models 404
The Reduced-Order Model Toolbar 404

Chapter 6: Visualization and Selection Tools

Working with Geometric Entities 408
About Geometric Entities 408
The Graphics Window. 410
Basic Selection Concepts 411
About Highlighted Geometric Entities in the Graphics Window 411
Selection Colors 415
About Selecting Geometric Entities 416
The Selection List Window 421
Selecting and Clearing Selection of Geometric Entities. 423
The Graphics Window Toolbar Buttons and Navigation 426
Using A 3D Mouse from 3Dconnexion 435
Customizing the Graphics Toolbars 436

Creating Named Selections 437
Introduction. 437
Creating Named Selections 439

Copying and Pasting Selection Lists 441
Adjacent 442
Ball 442
Box 444
Cylinder 444
Disk 445
Explicit. 446
Union, Intersection, Difference, and Complement 447
Creating Named Selections in the Geometry Sequence 448
Adjacent Selection (Geometry Sequences) 450
Ball Selection (Geometry Sequences) 451
Box Selection (Geometry Sequences) 451
Cylinder Selection (Geometry Sequences) 452
Disk Selection (Geometry Sequences) 453
Explicit Selection (Geometry Sequences) 453
Union Selection, Intersection Selection, Difference Selection, and Complement Selection (Geometry Sequences) 455
Cumulative Selections 456

User-Defined Views **457**
View (1D and 2D) 457
Axis (2D and 2D Axisymmetric) 458
Axis (1D and 1D Axisymmetric) 459
View (3D) 459
Camera 461
About the 3D View Light Sources and Attributes. 463
Directional Light 464
Point Light 466
Spotlight 467
Headlight 468
Hide for Geometry 469
Hide for Physics 470
Hide for Mesh Import 470

Chapter 7: Geometry Modeling and CAD Tools

Creating a Geometry for Analysis **474**
Overview of Geometry Modeling Concepts. 474
Techniques for Creating Geometries 475
Associative Geometry and Selections of Geometry Objects 476
Choosing the Right Space Dimension 476
Removing Interior Boundaries 478

Working with Geometry Sequences **479**
The Geometry Nodes 479
The Geometry Toolbar 479
The Sketch Toolbar 481
The Geometry Node 483
Plane Geometry 486
Creating a Geometry Sequence 487
Editing and Building Geometry Nodes 488
Exporting a Geometry 490

Measuring Geometry Objects 491
The Form Union/Assembly Node — Uniting the Geometry. 491
Using Geometry Parts 494
Geometry Part Settings 495
Loaded Part Settings 496
Local Parameters 496

Part Libraries **497**
Introduction. 497
Using Part Libraries 497
Creating a Part. 500

Geometric Primitives **502**
Bézier Polygon 503
Block 505
Circle 506
Circular Arc. 507
Composite Curve 508
Cone 509
Cubic Bézier 510
Cylinder 511
Eccentric Cone 512
Ellipse 514
Ellipsoid 515
Helix 516
Hexahedron. 519
Interpolation Curve 519
Interval 521
Line Segment 522
Parametric Curve. 523
Parametric Surface 524
Point 526
Polygon 526
Pyramid 528
Quadratic Bézier 529
Rectangle 530
Sphere 531
Square 532
Tetrahedron 533
Torus 534
Composite Object (Backward Compatibility) 535

Geometry Operations **536**
Array 539
Chamfer 540
Compose. 541
Convert to Curve 542
Convert to Point 543
Convert to Solid 544
Convert to Surface 545
Copy 546
Cross Section 547
Deformed Configuration 548
Delete Entities 549

Difference 549
Edit Object 550
Extrude 552
Fillet. 553
If, Else If, Else, End If. 554
Import 555
Intersection 558
Mirror 559
Move 560
Parameter Check. 561
Part Instance 561
Partition Objects 563
Partition Domains 564
Partition Edges. 566
Partition Faces 567
Revolve 568
Rigid Transform 569
Rotate 570
Scale 572
Split 573
Sweep 573
Tangent 576
Union 576
Work Plane 577
Using Work Planes 582

Virtual Geometry and Mesh Control Operations 586
Collapse Edges. 587
Collapse Faces 587
Collapse Face Regions 588
Form Composite Domains 588
Form Composite Edges 588
Form Composite Faces 589
Ignore Edges 589
Ignore Faces. 590
Ignore Vertices 590
Merge Edges 591
Merge Vertices 591
Mesh Control Domains 591
Mesh Control Edges. 592
Mesh Control Faces. 592
Mesh Control Vertices. 592
Remove Details 593

Geometry Modeling Examples 595
Creating a 2D Geometry Model 595
Creating a 3D Geometry Model 600
Forming Composite Edges and Faces by Ignoring Vertices and Edges . . 608
Merging Vertices by Collapsing Edges 612

Chapter 8: Meshing

Creating a Mesh for Analysis **616**
Meshing Concepts . . . 616
Mesh Elements for 1D, 2D, and 3D Geometries . . . 617
Free (Unstructured) Meshing . . . 618
Structured Meshes . . . 619
About Swept Meshes . . . 620
Mesh Control Entities . . . 621
The Mesh Toolbar . . . 622
Adding, Editing, and Building Meshing Sequences . . . 623
Mesh (Node) . . . 624
Using Mesh Parts . . . 625
Mesh Part Settings . . . 625
Meshes Generated by Adaptation . . . 625
The Mesh Statistics Window . . . 626

Meshing Techniques **628**
Choosing a Meshing Sequence Type. . . . 628
Mesh Element Quality and Size . . . 629
Avoiding Inverted Mesh Elements . . . 631
Troubleshooting Boundary Layer Mesh Generation . . . 633
Troubleshooting Free Tetrahedral Mesh Generation . . . 633

Meshing Operations and Attributes **635**
Adapt . . . 636
Boundary Layers . . . 639
Boundary Layer Properties . . . 640
Convert . . . 641
Corner Refinement . . . 642
Copy Domain . . . 642
Copy Edge . . . 644
Copy Face . . . 645
Copy . . . 646
Distribution . . . 647
Edge. . . . 648
Edge Groups . . . 649
Edge Map . . . 649
Free Quad . . . 650
Free Tetrahedral . . . 651
Free Triangular . . . 653
Mapped . . . 654
One-Point Map . . . 655
Reference . . . 655
Refine . . . 656
Scale . . . 657
Size . . . 657
Size Expression . . . 659
Swept . . . 663
Two-Point Map . . . 665

Importing and Exporting Meshes **666**
About Mesh Export, Import, and Operations on Imported Meshes . . . 666

Exporting Meshes 666
Importing Meshes 668
Creating Geometry from Mesh 670
Creating or Modifying Entities of Imported Meshes 671
Creating or Modifying Elements of Imported Meshes 672
Using Operations on an Imported Mesh 672
Ball 674
Box 675
Create Domains 675
Create Edges 676
Create Faces 677
Create Vertices 677
Cylinder 677
Delete Entities 678
Detect Faces 678
Fill Holes 679
Finalize. 679
Import 679
Join Entities 682
Logical Expression 683

Meshing Examples **684**
Generating a 3D Swept Mesh 684
Using Mesh Control Entities to Control Element Size 686
Using Structured and Unstructured Mesh with Boundary Layers 687

Chapter 9: Materials

Materials Overview **692**
About Materials and Material Properties 692
About the Material Databases 693
About Using Materials in COMSOL Multiphysics 694

Working with Materials **698**
The Material Browser Window 698
The Add Material Window 699
Materials 701
The Settings Window for Material 702
Property Groups 706
Material Link 709
Switch for Materials 709
Layered Material 710
Layered Material Link 714
Layered Material Stack. 717
Layered Material Link (Subnode) 719
Single-Layer Materials 720

Material Properties Reference **722**
About Model Inputs 722
About the Output Material Properties 722
Acoustics Material Properties 724
Electrochemistry Material Properties 725

Electromagnetic Models 726
Equilibrium Discharge 727
Gas Models 727
Geometric Properties (Shell) 728
Magnetostrictive Models 728
Piezoelectric Models 729
Piezoresistive Models 729
Semiconductors Material Properties 729
Solid Mechanics Material Properties. 733
Solid Mechanics Material Properties: Nonlinear Structural Materials Module 735
Solid Mechanics Material Properties: Fatigue Module 739
Solid Mechanics Material Properties: Geomechanics Material Model . . 740
Thermal Expansion Material Properties 741
External Material Properties 741

User-Defined Materials and Libraries 742
Importing a Material Library. 742
Creating a New Material Library and Adding and Editing Materials . . . 742
Restoring a Deleted User-Defined Library 745

Using Functions in Materials 746
Adding a Function to the Material 746
Defining an Analytic Function 746

Working with External Materials 749
The External Material Model 749
Using External Materials in Physics Interfaces 749
Built-in Material Function Interface Types 751
Library of Utility Functions for Structural Mechanics 757
How to Compile and Link an External Material Model. 757
Known Issues for External Materials 759
External Material 759

Module-Specific Material Databases 762
AC/DC Materials Database 762
Batteries and Fuel Cells Materials Database 763
Bioheat Materials Database 764
Building Materials Database 764
Equilibrium Discharge Materials Database 765
Liquids and Gases Materials Database 765
MEMS Materials Database 766
Nonlinear Magnetic Materials Database 767
Piezoelectric Materials Database 770
Piezoresistivity Materials Database 771
Optical Materials Database 771
RF Materials Database 772
Semiconductor Materials Database 772
Thermoelectric Materials Database 772
References for the Materials Databases 772

Chapter 10: The AC/DC Interfaces

The Electromagnetics Interfaces **778**

Fundamentals of Electromagnetics **779**
Maxwell's Equations . . . 779
Constitutive Relations . . . 779
Potentials . . . 780
Material Properties . . . 781
About the Boundary and Physics Interface Conditions . . . 781
Phasors . . . 782
Effective Nonlinear Magnetic Constitutive Relations . . . 783
Electromagnetic Forces . . . 783
References for Electromagnetic Theory . . . 783

Theory of Electrostatics **784**
Charge Relaxation Theory . . . 784
Electrostatics Equations . . . 785
The Electrostatics Interface in Time Dependent or Frequency Domain Studies 786

Theory of Electric Currents **787**
Electric Currents Equations in Steady State . . . 787

Theory of Magnetic Fields **788**
Magnetostatics Equation . . . 788
Frequency Domain Equation . . . 788
Transient Equation . . . 789
Maxwell's Equations . . . 789
Magnetic and Electric Potentials . . . 789
Gauge Transformations . . . 790
Selecting a Particular Gauge . . . 790
The Gauge and Equation of Continuity for Dynamic Fields . . . 790
Time-Harmonic Magnetic Fields . . . 790

The Electrostatics Interface **792**
Domain, Boundary, Edge, Point, and Pair Nodes for the Electrostatics Interface 793
Charge Conservation . . . 795
Conduction Loss (Time-Harmonic) . . . 795
Initial Values . . . 796
Space Charge Density . . . 796
Zero Charge . . . 796
Ground . . . 796
Electric Potential . . . 797
Surface Charge Density . . . 797
External Surface Charge Accumulation . . . 797
Electric Displacement Field . . . 798
Periodic Condition . . . 798
Thin Low Permittivity Gap . . . 799
Line Charge . . . 799
Line Charge (on Axis) . . . 799
Line Charge (Out-of-Plane) . . . 800
Point Charge . . . 800
Point Charge (on Axis) . . . 801

Change Cross Section 801
Change Thickness (Out-of-Plane). 801
Charge Conservation, Piezoelectric 802

The Electric Currents Interface 803
Domain, Boundary, Edge, Point, and Pair Nodes for the Electric Currents Interface 804
Current Conservation 806
Initial Values. 807
External Current Density. 807
Current Source 807
Electric Insulation. 808
Boundary Current Source 808
Normal Current Density 808
Distributed Impedance. 809
Contact Impedance 809
Sector Symmetry 810
Line Current Source 811
Line Current Source (on Axis). 811
Point Current Source 811
Point Current Source (on Axis) 812
Piezoresistive Material 812

The Magnetic Fields Interface 814
Domain, Boundary, Point, and Pair Nodes for the Magnetic Fields Interface 815
Ampère's Law 816
Ampère's Law, Magnetostrictive 818
Initial Values. 819
External Current Density. 819
Velocity (Lorentz Term) 819
Magnetic Insulation 820
Magnetic Field 821
Surface Current Density 821
Magnetic Potential 821
Perfect Magnetic Conductor 822
Line Current (Out-of-Plane) 822
Line Current (on Axis). 822

Chapter 11: The Pressure Acoustics Interface

Fundamentals of Acoustics 824
Acoustics Explained 824
Examples of Standard Acoustics Problems 824
Different Acoustic Interfaces 825
Mathematical Models for Acoustic Analysis 826

The Pressure Acoustics, Frequency Domain Interface 828
Domain, Boundary, Edge, Point, and Pair Nodes for the Pressure Acoustics, Frequency Domain Interface 830
Pressure Acoustics 831
Sound Hard Boundary (Wall) 831
Initial Values. 832
Monopole Source 832
Dipole Source 832

Normal Acceleration 832
Sound Soft Boundary 833
Pressure 833
Impedance 833
Symmetry 834
Plane Wave Radiation 834
Spherical Wave Radiation. 834
Cylindrical Wave Radiation 834
Incident Pressure Field. 835
Interior Sound Hard Boundary (Wall) 835
Periodic Condition 835
Axial Symmetry 836
Continuity 836

Theory for Pressure Acoustics, Frequency Domain 837
Frequency Domain Study. 837
Eigenfrequency Study 838
References for the Pressure Acoustics, Frequency Domain Interface . . 838

Chapter 12: The Chemical Species Transport Interfaces

Theory for Transport of Diluted Species 842
Mass Balance Equation 842
Equilibrium Reaction Theory 843
Convective Term Formulation. 844
Solving a Diffusion Equation Only. 845
Mass Sources for Species Transport. 845
Adding Transport Through Migration 846
Supporting Electrolytes 847
Crosswind Diffusion 848
Danckwerts Inflow Boundary Condition 848
Mass Balance Equation for Transport of Diluted Species in Porous Media 849
Convection in Porous Media 850
Diffusion in Porous Media 851
Dispersion 852
Adsorption 853
Reactions. 854
Mass Transport in Fractures 855
References 856

The Transport of Diluted Species Interface 857
The Transport of Diluted Species in Porous Media Interface 860
Domain, Boundary, and Pair Nodes for the Transport of Diluted Species Interface 861
Transport Properties 862
Turbulent Mixing 863
Initial Values. 864
Mass-Based Concentrations. 864
Reactions. 864
No Flux 865
Inflow 865
Outflow 866
Concentration 866

Flux 867
Symmetry 867
Flux Discontinuity 868
Partition Condition 868
Periodic Condition 868
Line Mass Source 869
Point Mass Source 869
Open Boundary 870
Thin Diffusion Barrier 870
Thin Impermeable Barrier 870
Equilibrium Reaction 870
Surface Reactions 871
Surface Equilibrium Reaction 872
Fast Irreversible Surface Reaction 872
Porous Electrode Coupling 872
Reaction Coefficients 872
Electrode Surface Coupling 873
Porous Media Transport Properties 873
Adsorption 875
Partially Saturated Porous Media 876
Volatilization 877
Reactive Pellet Bed 878
Reactions (Reactive Pellet Bed) 880
Species Source 881
Hygroscopic Swelling 881
Fracture 881

The Reacting Flow, Diluted Species Multiphysics Interface 883
The Reacting Laminar Flow, Diluted Species Interface 883
The Reacting Flow, Diluted Species Coupling Feature 884
Physics Interface Features 885

Chapter 13: The Fluid Flow Interface

Theory of Laminar Flow 888
General Single-Phase Flow Theory 888
Compressible Flow 890
Weakly Compressible Flow 890
The Mach Number Limit 890
Incompressible Flow 891
The Reynolds Number 891
Theory for the Wall Boundary Condition 892
Prescribing Inlet and Outlet Conditions 893
Normal Stress Boundary Condition 894
Pressure Boundary Condition 895
Mass Sources for Fluid Flow 896
Numerical Stability — Stabilization Techniques for Fluid Flow 897
Solvers for Laminar Flow 898
Pseudo Time Stepping for Laminar Flow Models 900
Discontinuous Galerkin Formulation 901
Particle Tracing in Fluid Flow 901
References for the Single-Phase Flow, Laminar Flow Interfaces 902

The Single-Phase Flow, Laminar Flow Interface **904**
The Laminar Flow Interface 904
Domain, Boundary, Pair, and Point Nodes for Single-Phase Flow 907
Fluid Properties 907
Volume Force 908
Initial Values. 909
Wall. 909
Inlet. 910
Outlet 911
Symmetry 912
Open Boundary 912
Boundary Stress 913
Periodic Flow Condition 914
Flow Continuity 914
Pressure Point Constraint 915
Point Mass Source 915
Line Mass Source. 915
Gravity. 916

Chapter 14: The Heat Transfer Interfaces

Theory for Heat Transfer **918**
Theory for Heat Transfer in Solids 918
Theory for Heat Transfer in Fluids 918

About the Heat Transfer Interfaces **920**
Space Dimensions 920
Study Types. 920
Versions of the Heat Transfer Physics Interface 920
Settings for the Heat Transfer Interface 921
References for the Heat Transfer Interfaces. 922

The Heat Transfer in Solids Interface **923**
Feature Nodes for the Heat Transfer in Solids Interface 923

The Heat Transfer in Fluids Interface **925**
Feature Nodes for the Heat Transfer in Fluids Interface 925

The Heat Transfer in Solids and Fluids Interface **927**

The Joule Heating Interface **928**
Electromagnetic Heating 929

The Nonisothermal Flow and Conjugate Heat Transfer Interfaces **931**
Settings for Physics Interfaces and Coupling Feature 931
Nonisothermal Flow 931
Physics Interface Features 933

Domain Features **934**
Cross Section 934
Thickness. 934
Heat Source. 935

Fluid 936
Solid 938
Initial Values 939
Translational Motion 940

Boundary Features **941**
Boundary Heat Source 941
Continuity 942
Heat Flux 942
Line Heat Source on Axis 943
Outflow 943
Periodic Condition 944
Surface-to-Ambient Radiation 944
Symmetry 945
Temperature 946
Thermal Insulation 946
Thin Layer 947

Edge and Point Features **949**
Line Heat Source 949
Point Heat Source 949
Point Heat Source on Axis 950

Heat Transfer Variables **951**
Predefined Variables 951
Global Variables 952
Domain Heat Fluxes 954
Boundary Heat Fluxes 955
Internal Boundary Heat Fluxes 955
Domain Heat Sources 956
Boundary Heat Sources 956
Line and Point Heat Sources 957

Using the Boundary Conditions for the Heat Transfer Interfaces **958**
Temperature and Heat Flux Boundary Conditions 958
Overriding Mechanism for Heat Transfer Boundary Conditions 958

Heat Transfer Consistent and Inconsistent Stabilization Methods **961**
Consistent Stabilization 961
Inconsistent Stabilization 961

Handling Frames in Heat Transfer **962**
Physics Feature Nodes and Definition Frame 962
Definition Frame of Domain Nodes 963
Definition Frame of Boundary Nodes 963
Definition Frame of Edge and Point Nodes 963

Solver Settings **964**
Linear Solver 964
Nonlinear Solver 965
Time-Dependent Study Step 966
Guidelines for Solving Multiphysics Problems 967

Chapter 15: Solid Mechanics

The Solid Mechanics Interface **970**
Domain, Boundary, Edge, Point, and Pair Nodes for Solid Mechanics . . 972
Initial Values. 973
Change Thickness 974
Linear Elastic Material 974
Damping 976
Free. 977
Prescribed Displacement 977
Fixed Constraint 978
Roller 979
Symmetry 979
Rigid Motion Suppression. 980
Body Load 980
Boundary Load. 981
Edge Load 982
Point Load 982
Point Load (on Axis) 983
Periodic Condition 983
Ring Load. 984

Chapter 16: Equation-Based Modeling

The Mathematics Interfaces **988**

Modeling with PDEs **990**
About Equation Forms. 990
Notational Conventions 990
PDE Interface Variables 992
The General Form PDE 992
The Coefficient Form PDE 993
Multiple Dependent Variables — Equation Systems 996
Solving Time-Dependent Problems 1001
Solving Eigenvalue Problems. 1003
About Weak Form Modeling 1004
Introduction to the Weak Form 1005
The Weak Form PDE 1006
Specifying and Interpreting Boundary Conditions 1007
Symmetric and Nonsymmetric Constraints 1011

The PDE Interfaces **1013**
Adding a PDE Interface to a Component 1013
Settings for the Discretization Sections 1014
The Coefficient Form PDE Interfaces 1017
The General Form PDE Interfaces 1018
The Weak Form PDE Interfaces 1019
The Classical PDE Interfaces 1020
Domain, Boundary, Pair, Edge, and Point Conditions for PDEs. 1021
Initial Values. 1022
Coefficient Form PDE 1022
General Form PDE 1023

Weak Form PDE 1023
Source, Edge Source, and Point Source 1024
Classical PDE Domain Nodes 1024
Dirichlet Boundary Condition 1025
Constraint 1025
Excluded Points, Excluded Edges, Excluded Surfaces 1026
Flux/Source 1026
Zero Flux. 1026
No Flux 1027
No Diffusive Flux. 1027
Interior Dirichlet Boundary Condition. 1027
Interior Flux/Source. 1027
Periodic Condition 1028
Destination Selection 1029

The PDE, Boundary Elements Interface 1030
About Boundary Elements Interfaces 1030
Finite and Infinite Voids 1030
The PDE, Boundary Elements Interface Main Node 1031
Domain and Boundary Physics for the PDE, Boundary Elements Interface 1034
PDE, Boundary Elements 1034
Initial Values. 1035
Zero Flux. 1035
Dirichlet Boundary Condition 1035
Flux/Source 1035

Theory for the Boundary Elements PDE 1037
About the Boundary Element Method 1037
The Fundamental Solution to Laplace's Equation 1037
Derivation of the Boundary Integral Representation of the Solution to Laplace's Equation 1038
Derivation of the Boundary Integral Equations. 1039
The Weak Form Implementation of the Boundary Integral Equations . . 1040
Reference 1041

The Wave Form PDE Interface 1042
Domain and Boundary Physics for the Wave Form PDE Interface . . . 1043
Wave Form PDE 1043
Initial Values. 1046
Zero Flux. 1046
Flux/Source 1046
Interior Flux. 1046
Interior Flux Split. 1047
Interior Source 1048

Theory for the Wave Form PDE 1049
Derivation of the Weak Form of the Wave Form PDE 1049
Time Explicit Integrator 1050
Local Time Stepping. 1051
Reference for the Wave Form PDE Interface 1052

About Auxiliary Equation-Based Nodes 1053
Weak Contribution (PDEs and Physics) 1053
Weak Contribution on Mesh Boundaries. 1054
Auxiliary Dependent Variable 1055

About Explicit Constraint Reaction Terms 1055
Pointwise Constraint 1057
Weak Constraint 1058
Discretization (Node) 1060

Modeling with ODEs and DAEs **1061**
Adding ODEs, DAEs, and Other Global Equations 1061
Solving ODEs: An Example 1062
Solving Algebraic and Transcendental Equations: An Example 1062
Distributed ODEs and DAEs 1063

The ODE and DAE Interfaces **1064**
The Global ODEs and DAEs Interface 1064
About ODEs, Initial-Value Problems, and Boundary-Value Problems . . 1064
Global Equations 1065
Global Constraint 1067
Weak Contribution (ODEs and DAEs) 1067
The Distributed ODEs and DAEs Interfaces. 1067
Distributed ODE 1068
Algebraic Equation 1068

The Events Interface **1069**
Discrete States 1069
Indicator States 1070
Explicit Event 1070
Implicit Event 1070
Reinitialization on Domains, Boundaries, Edges, or Points 1071

The Wall Distance Interface **1072**
Domain and Boundary Nodes for the Wall Distance Interface 1072
Distance Equation 1073
Initial Values. 1073
Wall. 1073
Wall Distance Continuity. 1073
Periodic Condition 1074

Theory for Wall Distance **1075**
The Eikonal Equation 1075
Modified Eikonal Equation 1075
Reference for the Wall Distance Interface 1076

Curvilinear Coordinates **1077**
Introduction. 1077
The Curvilinear Coordinates Interface. 1077
Diffusion Method 1078
Adaptive Method 1079
Elasticity Method 1079
Flow Method 1080
User Defined 1080
Inlet 1081
Jump 1081
Outlet 1082
Wall. 1082
Interior Wall 1082

Coordinate System Settings 1082

Using Extra Dimensions **1083**
Attached Dimensions 1084
Points to Attach 1086
Integration Over Extra Dimension 1087
Example: Solving Poisson's Equation in a Cylinder by Means of Extra Dimensions 1087

Chapter 17: Sensitivity Analysis

Theory for the Sensitivity Interface **1090**
About Sensitivity Analysis. 1090
Sensitivity Problem Formulation 1090
Theory for Stationary Sensitivity Analysis. 1091
Specification of the Objective Function 1092
Choosing a Sensitivity Method 1093
Postprocessing Sensitivities 1094
Issues to Consider Regarding the Control Variables 1094
Issues to Consider Regarding the Objective Function 1095
Issues to Consider Regarding Constraints 1096

The Sensitivity Interface **1097**
Integral Objective 1098
Probe Objective 1098
Control Variable Field 1098
Global Objective 1099
Global Control Variables 1099

Chapter 18: Deformed Geometry and Moving Mesh

Deformed Mesh Fundamentals **1102**
About Deformed Meshes. 1102
Deformed Geometry vs. Moving Mesh. 1102
Arbitrary Lagrangian-Eulerian Formulation (ALE) 1103
About Frames 1104
Mathematical Description of the Mesh Movement 1105
Derivatives of Dependent Variables 1106
Transformation Matrices and Volume Factors 1108
Smoothing Methods. 1110
Limitations of the ALE Method 1112
Tips for Modeling Using Deformed Meshes 1112
Remeshing a Deformed Mesh 1113

Deformed Mesh Definition Features **1115**
Moving Mesh Features 1115
Deformed Geometry Features. 1116
Prescribed Deformation 1116
Rotating Domain 1117
Deforming Domain 1118
Fixed Boundary 1118
Prescribed Mesh Displacement 1118

Prescribed Normal Mesh Displacement 1118
Prescribed Normal Mesh Velocity 1119
Rotating Boundary 1119
Mesh Slip 1120
Symmetry/Roller 1120

The Moving Mesh Interface **1121**
Domain and Boundary Nodes in the Moving Mesh Interface 1122
Fixed Mesh 1122
Prescribed Mesh Displacement 1122
Free Deformation 1123
Prescribed Deformation 1123
Prescribed Mesh Velocity. 1123
Prescribed Normal Mesh Velocity 1123
Zero Normal Mesh Velocity 1124
Zero Normal Mesh Displacement 1124

The Deformed Geometry Interface **1125**
Domain and Boundary Nodes for Deformed Geometry 1126
Fixed Mesh 1126
Prescribed Mesh Displacement 1126
Free Deformation 1126
Prescribed Deformation 1126
Prescribed Mesh Velocity. 1127
Prescribed Normal Mesh Velocity 1127
Zero Normal Mesh Velocity 1127
Zero Normal Mesh Displacement 1128

Chapter 19: Elements and Shape Functions

Shape Functions and Element Types **1130**
Finite Elements 1130
Shape Function Types (Element Types) 1132

Chapter 20: Studies and Solvers

Introduction to Solvers and Studies **1150**
The Add Study Window 1151
Study 1153
Solver Configurations 1153
The Relationship Between Study Steps and Solver Configurations . . . 1155
Combine Solutions 1157
Study Reference 1158
Model Reduction 1159

Study and Study Step Types **1162**
Common Study Step Settings 1170
Using a Solution From Previous Study Steps. 1177
Physics and Variables Selection 1178
Error Estimation — Theory and Variables 1182
Stationary 1184

Time Dependent 1186
Time Discrete 1188
Time Dependent, Modal 1188
EEDF Initialization 1188
Time Periodic 1189
Time Periodic to Time Dependent 1189
Frequency to Time FFT 1189
Eigenfrequency. 1189
Eigenvalue 1191
Frequency Domain 1193
Frequency Domain, Modal 1194
Frequency Domain, AWE Reduced-Order Model 1195
Frequency Domain, Modal Reduced-Order Model 1196
Time Dependent, Modal Reduced-Order Model 1196
Adaptive Frequency Sweep 1196
Time to Frequency FFT 1197
Batch 1197
Batch Sweep 1198
Bidirectionally Coupled Particle Tracing 1200
Bidirectionally Coupled Ray Tracing. 1201
Cluster Computing 1201
Cluster Sweep 1206
Function Sweep 1208
Material Sweep 1209
Modal Reduced-Order Model 1209
Multigrid Level 1209
Parametric Sweep 1210
Sensitivity. 1213
Bolt Pretension 1215
Boundary Mode Analysis 1215
TEM Boundary Mode Analysis 1216
Coil Geometry Analysis 1216
Electrochemistry Studies and Study Steps 1217
Fatigue 1219
Frequency Domain Perturbation 1220
Frequency-Stationary 1221
Frequency-Transient 1221
Frozen Rotor 1222
Frozen Rotor with Initialization 1222
Stationary Free Surface 1223
Frozen Rotor with Stationary Free Surface 1223
Frozen Rotor with Initialization and Stationary Free Surface 1223
Linear Buckling. 1223
Mapping 1225
Mean Energies 1225
Mode Analysis 1225
Optimization 1227
Parameter Estimation 1227
Prestressed Analyses Studies 1227
Ray Tracing 1229
Reduced Electric Fields 1230
Schrödinger-Poisson 1230
Semiconductor Equilibrium 1231
Semiconductor Initialization 1231

Frequency-Stationary, One-Way Coupled, Electromagnetic Heating . . 1232
Frequency-Transient, One-Way Coupled, Electromagnetic Heating . . . 1232
Small-Signal Analysis, Frequency Domain 1232
Stationary and Time Dependent One-Way Coupled Studies for Fluid-Structure Interaction 1232
Stationary, Time Dependent, and Frozen Rotor One-Way Coupled Studies for Nonisothermal Flow 1234
Stationary and Time Dependent One-Way Coupled Studies for Moisture Flow 1235
Stationary Source Sweep 1235
Stationary Plug Flow. 1235
Stationary with Initialization and Time Dependent with Initialization . . 1236
Stationary, Time Dependent, and Frozen Rotor One-Way Coupled with Initialization Studies for Nonisothermal Flow 1236
Thermal Perturbation, Eigenfrequency 1237
Thermal Perturbation, Frequency Domain 1237
Time Dependent with FFT 1237
Time Dependent with Phase Initialization. 1238
Wavelength Domain 1238

Computing a Solution 1240
Getting Results While Solving 1243
Computing the Initial Values 1243
The Progress Window. 1243
Convergence Plots 1245
The Log Window. 1246
The External Process Window. 1250

Solution Operation Nodes and Solvers 1251
Selecting a Stationary, Time-Dependent, or Eigenvalue Solver 1252
Remarks on Solver-Related Model Characteristics 1252
Scaling of Variables and Equations 1253
About the Stationary Solver. 1254
About the Parametric Solver 1257
About the Time-Dependent Solver 1257
About the Time Discrete Solver 1260
The Eigenvalue Solver Algorithm 1261
The Modal Solver Algorithm 1262
The Time Explicit Solver Algorithms 1264
The AWE Solver Algorithm. 1265
AWE Solver. 1266
Dependent Variables 1269
Eigenvalue Solver. 1271
FFT Solver 1273
Modal Solver 1279
Optimization Solver. 1282
Plug Flow Solver 1282
Stationary Solver 1282
Time-Dependent Solver 1284
Time Discrete Solver 1292
Time Explicit Solver. 1293
References for the Solution Operation Nodes and Solvers 1294

Solution Attribute Nodes 1296
About the Advanced Attribute Settings 1299
Choosing the Right Linear System Solver. 1300
About Incomplete LU 1302

The Adaptive Mesh Refinement Solver 1302
The Domain Decomposition Solvers 1304
The Fully Coupled Attribute and the Double Dogleg Method 1306
The Iterative Solvers 1307
The Multigrid Solvers 1311
The Parametric Solver Algorithm 1313
The SCGS Solver 1314
The Segregated Solver 1314
The Sensitivity Analysis Algorithm 1315
About the SOR, SOR Gauge, SOR Line, and SOR Vector Iterative Solver Algorithms 1317
The Sparse Approximate Inverse (SAI) Preconditioner 1319
The Vanka Algorithm 1319
Complex Shifted Laplacian for Large Helmholtz Problems 1320
The WENO Limiter 1321
Adaptive Mesh Refinement 1321
Advanced 1324
Auxiliary-Space Maxwell (AMS) 1327
Automatic Remeshing 1328
Coarse Solver 1329
Control Field 1329
Control State 1330
Direct 1330
Direct Preconditioner 1334
Domain Decomposition (Schur) 1335
Domain Decomposition (Schwarz) 1336
Domain Solver 1341
Eigenvalue Parametric 1341
Error Estimation 1342
Field 1342
Fully Coupled 1343
Hierarchical LU 1347
Incomplete LU 1348
Iterative 1349
Jacobi 1352
Krylov Preconditioner 1352
Localized Schur 1353
Lower Limit 1354
Lumped Step 1354
Multigrid 1354
Parametric 1357
Postsmoother 1360
Presmoother 1360
Previous Solution 1360
Sparse Approximate Inverse (SAI) 1361
Sparse Localized Schur 1362
SCGS 1362
Schur Solver 1364
Segregated 1364
Segregated Step 1366
Sensitivity 1367
SOR 1367
SOR Gauge 1368
SOR Line 1369
SOR Vector 1369

State 1370
Stationary Acceleration 1371
Stop Condition 1372
Time Parametric 1373
Upper Limit 1374
Vanka 1375
References for the Linear System Solvers and the Preconditioners . . . 1376

Solution Utility Nodes **1379**
Adaptive Mesh Refinement (Utility Node) 1379
Assemble 1379
Compile Equations 1381
Copy Solution 1381
For and End For 1382
The Statistics Page 1383
Input Matrix 1383
Solution Store 1383
State Space 1384

Job Configurations **1386**
Parametric Sweep (Job Configurations) 1387
Batch (Job Configurations) 1389
Cluster Computing (Job Configurations) 1392
Function Sweep (Job Configurations) 1395
Material Sweep (Job Configurations) 1396
Optimization (Job Configurations) 1396
Sequence 1397
Using a Job Configuration to Store Parametric Results on File 1397
Batch Data 1399
Derived Value 1399
Evaluate Derived Value 1400
Export to File 1400
External Class 1401
External Process 1401
Method Call 1402
Geometry 1402
Job 1402
Mesh 1402
Plot Group 1402
Save Model to File 1403
Solution 1403

Harmonic Perturbation, Prestressed Analysis, and Small-Signal Analysis **1404**
Frequency Domain Perturbation Study Step 1404
Harmonic Perturbation — Exclusive and Contributing Nodes 1404

Chapter 21: Results Analysis and Plots

Results Overview **1408**
About the Results Branch 1408
Common Results Node Settings 1410
Selecting a Dataset for Plots and Postprocessing 1412

Inputs for Parametric Solver and Parametric Sweep Studies 1413
Entering Axis Data for a Dataset 1414
Expressions and Predefined Quantities. 1414
Defining Plane Data for a Dataset 1416
Plot Titles for Plot Groups and Plot Types 1417
Using Special Formats and Symbols in Titles. 1419
Arrow Positioning 1421
Principal Components and Positioning 1422
Defining the Number of Levels 1422
Selecting Color Tables 1423
Defining the Color and Data Ranges 1424
Defining the Coloring and Style 1424
Defining Element Filters 1430
Defining Shrinking of Elements 1430
Entering Quality Settings for Plot Settings Windows 1430
Inheriting Style Options 1433
Integration Settings for a Derived Value 1433
Data Series Operation Settings for a Derived Value. 1434
Small-Signal Analysis, Prestressed Analysis, and Harmonic Perturbation Plot Settings 1435
Extra Time Steps for Trajectory Plots and Intersection Point Datasets . 1437
Node Properties for Reports 1438
Through-Thickness Location for Layered Materials 1438

Datasets **1439**
About Datasets 1439
Dataset Types 1440
Array 1D, Array 2D, and Array 3D 1442
Average and Integral 1444
Contour (Dataset) 1444
Cut Line 2D and Cut Line 3D 1445
Cut Plane. 1445
Cut Point 1D, Cut Point 2D, and Cut Point 3D 1446
Edge 2D and Edge 3D 1447
Extrusion 1D and Extrusion 2D 1448
Filter 1448
Grid 1D, Grid 2D, and Grid 3D 1449
Intersection Point 2D and Intersection Point 3D 1450
Isosurface (Dataset). 1452
Join 1452
Layered Material 1453
Maximum and Minimum 1454
Mesh (Dataset) 1455
Mirror 2D and Mirror 3D 1455
Parameterized Curve 2D and Parameterized Curve 3D 1456
Parameterized Surface 1456
Parametric Extrusion 1D and Parametric Extrusion 2D 1457
Particle (Dataset). 1458
Particle Bin 1458
Ray (Dataset) 1459
Ray Bin 1460
Receiver 2D and Receiver 3D 1460
Response Spectrum 2D and Response Spectrum 3D 1461
Revolution 1D and Revolution 2D 1465
Sector 2D and Sector 3D. 1465

Shell 1467
Solution 1468
Surface (Dataset) 1468
Time Average and Time Integral 1469

Derived Values, Evaluation Groups, and Tables 1470
About Derived Values 1470
About Evaluation Groups 1470
The Table Window and Tables Node 1472
Derived Value Types 1474
Volume Average, Surface Average, and Line Average 1475
Volume Integration, Surface Integration, and Line Integration 1476
Volume Maximum, Volume Minimum, Surface Maximum, Surface Minimum, Line Maximum, and Line Minimum 1476
Point Evaluation 1477
Global Evaluation 1478
Global Matrix Evaluation 1478
Particle Evaluation 1479
Point Matrix Evaluation 1480
Ray Evaluation 1480
Aberration Evaluation 1481
Global Evaluation Sweep 1482
System Matrix 1482
Table 1483

Plot Groups and Plots 1486
About Plot Groups 1486
Plot Types 1487
The Plot Windows 1492
Creating Cross-Section Plots and Combining Plots 1493
Plotting and Cross-Section Interactive Toolbar 1494
1D, 2D, and 3D Cross-Section Point Plots 1495
2D Cross-Section Line Plots 1497
3D Cross-Section Line Plots 1498
3D Cross-Section Surface Plot 1500
1D Plot Group and Polar Plot Group 1501
Smith Plot Group 1505
2D Plot Group and 3D Plot Group 1507
Admittance Graph 1510
Annotation 1511
Annotation Data 1513
Arrow Data 1513
Arrow Line 1513
Arrow Point 1514
Arrow Surface 1514
Arrow Volume 1514
Contour (Plot) 1514
Coordinate System Volume, Coordinate System Surface, and Coordinate System Line 1515
Directivity 1516
Global 1518
Histogram 1520
Impedance Graph 1521
Impulse Response 1522
Interference Pattern 1523

Isosurface (Plot) 1524
Layered Material Slice 1524
Line 1526
Line Data 1526
Line Graph 1526
Matrix Histogram. 1527
Max/Min Volume, Max/Min Surface, Max/Min Line, Max/Min Point . . . 1527
Mesh (Plot) 1529
Multislice 1530
Nyquist 1531
Octave Band 1531
Optical Aberration 1533
Particle (Plot) 1536
Particle Tracing 1536
Particle Tracing with Mass 1539
Particle Trajectories. 1541
Filter for Particle Trajectories 1541
Phase Portrait 1542
Poincaré Map 1542
Point Data 1543
Point Graph 1543
Point Trajectories 1544
Filter for Point Trajectories 1545
Principal Stress Volume 1545
Principal Stress Surface 1546
Principal Stress Line 1546
Radiation Pattern 1546
Ray (Plot). 1549
Ray Trajectories 1550
Filter for Ray and Ray Trajectories 1550
Reflection Graph 1551
Scatter Surface and Scatter Volume 1551
Slice 1552
Spot Diagram 1553
Streamline 1556
Streamline Surface 1561
Surface (Plot) 1564
Surface Data 1564
Surface Slit 1565
Table Graph. 1565
Table Surface 1567
Through Thickness 1568
Tube Data 1570
Volume 1570
Waterfall 1570
Whirl 1571
Color Expression. 1571
Deformation 1571
Export Expressions 1572
Filter 1572
Height Expression 1573
Selection (Plot Attribute). 1574

Exporting Data and Images **1575**
Export Types 1575
About the Sectionwise Data Format for Data Export 1575
Animation 1576
Data. 1580
Mesh (Export) 1582
Table 1583
Image 1583
Plot 1586

Reports **1588**
About the Report Generator 1588
Generating a Model Report 1588
Creating, Exporting, and Using Custom Report Templates 1589
The Template Node 1589
The Report Node 1590
The Title Page 1593
The Table of Contents. 1594
Sections in the Report 1594
Custom Report Components 1594
Declaration Components. 1596
Arrays and Scalars 1596
Mathematical Symbols and Special Characters 1596
Model Contents — Report Components. 1604
Root Report Node 1604
Component Report Node 1604
Definitions Report Nodes 1604
Geometry Report Node 1608
Material Report Node 1608
Physics Interface Report Node. 1609
Multiphysics Coupling Report Node. 1609
Mesh Report Node 1610
Study Report Node 1610
Solver Report Node 1610
Results Report Nodes 1611
Declaration Contents 1612

Printing and Capturing Screenshots **1614**
Printing from the COMSOL Desktop 1614
Capturing and Copying Screenshots. 1614
Creating PowerPoint Presentations with Images Linked to Models . . . 1616
Setting and Clearing the Thumbnail Image 1619

Chapter 22: Running COMSOL Multiphysics

Running COMSOL Multiphysics **1622**
Windows and the Cross-Platform Desktop 1622
COMSOL Multiphysics Client-Server Architecture 1622
Parallel Computing with COMSOL Multiphysics 1622
LiveLink for MATLAB 1623
LiveLink for Excel. 1623
COMSOL Batch 1623

COMSOL API 1624
Security Settings 1624
COMSOL and the Java Heap Space 1625

COMSOL Multiphysics Client-Server Architecture 1627
Standalone COMSOL 1627
Running COMSOL Multiphysics in Client-Server Mode 1627
Running COMSOL with MATLAB or Excel 1627

Running COMSOL Multiphysics in Client-Server Mode 1629
Advantages of Using COMSOL Multiphysics in Client-Server Mode . . . 1629
Running COMSOL Multiphysics in Client-Server Mode 1629
Connecting, Disconnecting, and Reconnecting to and from the Desktop . 1630
Shared Libraries 1632

Running COMSOL in Parallel 1633
Overview of Simulations on Shared- and Distributed-Memory Computers 1633
Shared-Memory Parallel COMSOL 1634
COMSOL and BLAS. 1635
Distributed-Memory Parallel COMSOL 1635
Benefits of Running COMSOL in a Distributed Mode 1636
Running COMSOL in Parallel on Clusters 1636
Grid Computing and Remote Computing in COMSOL Multiphysics. . . 1639

The COMSOL Commands 1641
COMSOL Commands on Windows. 1641
COMSOL Commands on Linux 1655
COMSOL Commands on macOS. 1669

Chapter 23: Glossary

Glossary of Terms 1680

1

Introduction

Welcome to the COMSOL Multiphysics® simulation software! This book details features and techniques that help you throughout all COMSOL Multiphysics modeling in version 5.5 using the COMSOL Desktop® environment. For example, detailed information about:

- How to build geometries in COMSOL Multiphysics.
- How to create a mesh for the analysis.
- How to create parameters and variables used within a model.
- How to add the physics interfaces and material properties.
- How to solve and display the results.

The full set of documentation shows you, step by step, how to tap into the functions and capabilities in the COMSOL Multiphysics software. This introductory chapter provides an overview of COMSOL Multiphysics and its product family, documentation set, and other resources.

Version 5.5 contains further enhanced *COMSOL Compiler*™, *Application Builder*, and *COMSOL Server*™ products for creating and deploying custom applications based on COMSOL Multiphysics.

In this chapter:

- About COMSOL Multiphysics
- COMSOL Documentation and Help
- Overview of the Reference Manual

About COMSOL Multiphysics

COMSOL Multiphysics is a powerful interactive simulation environment used to model and solve all kinds of scientific and engineering problems. The software provides a powerful integrated desktop environment with a *Model Builder* that gives you a full overview of the model and access to all functionality. With COMSOL Multiphysics you can easily extend conventional models for one type of physics into multiphysics models that solve coupled physics phenomena — and that do so simultaneously. Accessing this power does not require an in-depth knowledge of mathematics or numerical analysis.

Using the built-in *physics interfaces* and the advanced support for material properties, you can build models by defining the relevant physical quantities — such as material properties, loads, constraints, sources, and fluxes — rather than by defining the underlying equations. You can always apply these variables, expressions, or numbers directly to solid and fluid domains, boundaries, edges, and points independently of the computational mesh. The COMSOL Multiphysics software then internally compiles a set of equations representing the entire model.

You access the power of COMSOL Multiphysics as a standalone product through a flexible graphical user interface (GUI), in applications created using the Application Builder and deployed using COMSOL Compiler™ or COMSOL Server™, or by script programming in Java® or the MATLAB® language (this requires a LiveLink™ *for* MATLAB® license).

Using these physics interfaces, you can perform various types of studies including:

- Stationary and time-dependent (transient) studies
- Linear and nonlinear studies
- Eigenfrequency, modal, and frequency response studies

When solving the models, the COMSOL Multiphysics software assembles and solves the problem using a set of advanced numerical analysis tools. The software runs the analysis together with adaptive mesh refinement (if selected) and error control using a variety of numerical solvers. The studies can make use of multiprocessor systems and cluster computing, and you can run batch jobs and parametric sweeps.

The COMSOL Multiphysics software creates *sequences* to record all steps that create the geometry, mesh, physics, studies and solver settings, and visualization and results presentation. This makes it easy to parameterize any part of the model; simply change a node in the model tree and rerun the sequences. The program remembers and reapplies all other information and data in the model.

REAL-WORLD APPLICATIONS

Partial differential equations (PDEs) form the basis for the laws of science and provide the foundation for modeling a wide range of scientific and engineering phenomena. You can use the COMSOL Multiphysics software in many

application areas, including the following, combining physics freely and incorporating user-defined PDEs, ODEs, and DAEs if needed:

- Acoustics
- Bioscience
- Chemical reactions
- Corrosion and corrosion protection
- Diffusion
- Electrochemistry
- Electrodeposition
- Electromagnetics
- Fatigue analysis
- Fluid dynamics
- Fuel cells and batteries
- Geophysics and geomechanics
- Heat transfer
- Layered shells and composite materials
- Metal processing
- Microelectromechanical systems (MEMS)
- Microfluidics
- Microwave engineering
- Multibody dynamics
- Optics
- Optimization and sensitivity analysis
- Particle tracing
- Photonics
- Piezoelectric devices
- Pipe flow
- Plasma physics
- Porous media flow
- Quantum mechanics
- Radio-frequency components
- Ray tracing and ray optics
- Rotordynamics
- Semiconductor devices
- Structural mechanics
- Subsurface flow
- Transport phenomena
- Wave propagation

Many real-world applications involve simultaneous couplings of physics, represented in a system of PDEs — *multiphysics*. For instance, the electric resistance of a conductor often varies with temperature, and a model of a conductor carrying current should include resistive-heating effects. The Multiphysics Modeling Workflow section discusses multiphysics modeling techniques. Predefined multiphysics interfaces provide easy-to-use entry points for common multiphysics applications.

In its base configuration, COMSOL Multiphysics offers modeling and analysis power for many application areas. For several of the key application areas there are also optional add-on modules. These application-specific modules use terminology, solution methods, and plot types specific to the particular discipline, which simplifies creating and analyzing models. The modules also include comprehensive Application Libraries with example models that show the use of the product within its application areas.

The COMSOL Multiphysics Modules and Interfacing Options

The optional modules, including interfacing options such as the CAD Import Module and bidirectional interfaces such as the LiveLink™ products, are optimized for specific application areas and offer discipline-standard terminology and physics interfaces. For some modules, additional material libraries, specialized solvers, element types, and visualization tools are also available.

For up-to-date module availability, product descriptions, and a specification chart, go to www.comsol.com/products.

COMSOL Documentation and Help

About the Documentation Set

The full documentation set that ships with COMSOL Multiphysics consists of the following titles:

- *Introduction to COMSOL Multiphysics* — information about version 5.5 and how to build models using the desktop environment, including quick references to keyboard shortcuts and common commands and functions.
- *COMSOL License Agreement*.
- *COMSOL Multiphysics Installation Guide* — besides covering various installation options, it describes system requirements and how to configure and run the COMSOL Multiphysics software on different platforms, including client-server architectures as well as shared-memory and distributed (cluster) parallel versions.
- *COMSOL Multiphysics Reference Manual* — this book, which covers the functionality of COMSOL Multiphysics across its entire range from geometry modeling to results evaluation and visualization, including the physics interfaces for physics and equation-based modeling. It serves as a tutorial and a reference guide to use COMSOL Multiphysics. This book reviews geometry, mesh, solver, and results functionality and provides detailed information about the settings and options. Additionally, it describes some advanced functionality and settings in COMSOL Multiphysics and provides background material and references.
- *COMSOL Multiphysics Programming Reference Manual* — this book provides details about features and techniques that help you control COMSOL Multiphysics using its application programming interface (API). The COMSOL API can be used from the Application Builder, in a standalone Java® application, and from MATLAB® using the LiveLink™ *for* MATLAB® interface. For the Application Builder, the *Application Programming Guide* provides information about using the COMSOL API and the API of the Application Builder components to create methods for custom applications.
- The *Introduction to the Application Builder* and the *Application Builder Reference Manual* provide documentation related to the Application Builder and how to create and deploy simulation applications and how to use COMSOL Compiler™ to create standalone runnable applications. See also the *COMSOL Server Manual* for configure a server and clients for COMSOL Multiphysics applications.
- *COMSOL Server Manual* — information about setting up, configuring, and running a COMSOL Server for running and deploying applications within an organization.
- The *Physics Builder Manual* provides documentation related to the Physics Builder for creating custom physics interfaces.
- The *Essentials of Postprocessing and Visualization* and *Specialized Techniques for Postprocessing and Visualization* provide tips and information that help you get the most out of the postprocessing and visualization tools in COMSOL Multiphysics.
- *COMSOL Multiphysics Release Notes* — information about new functionality and changes in the 5.5 release and about compatibility with earlier versions of COMSOL Multiphysics.

In addition, each of the optional modules includes a manual as described in The COMSOL Multiphysics Modules and Interfacing Options. The documentation for the optional CAD Import Module and LiveLinks to CAD packages is available in separate manuals, and the documentation for the optional Material Library in the *Material Library User's Guide*.

The *COMSOL LiveLink™ for MATLAB® User's Guide* shows how to access the capabilities of COMSOL from the MATLAB programming environment.

DIFFERENT INSTRUCTIONS FOR DIFFERENT OPERATING SYSTEMS

The Windows® platform uses a ribbon layout, a style familiar to Microsoft® Office users and integrated into many other Windows software designs. The ribbon-style layout is intuitive and makes it easy to locate similar and frequently used features. For the Linux® and macOS platforms, there are extended toolbars that provide almost identical single-click access to most functionality in the software.

The use of the ribbon for Windows users means that there are slightly different instructions about how to access some features compared to macOS or Linux users. When specific instructions are included about where to find a particular feature, the instructions distinguish between the operating systems using different icons.

- Where there are no differences, the icons are not used.
- Where there are minor differences in appearance or accessibility, but the functionality is the same, no icons are used.
- In general, instructions for all platforms imply that the feature is available from a named toolbar. For example, the **Home** toolbar, **Physics** toolbar, **Mesh** toolbar, or **Geometry** toolbar. See Toolbars and Keyboard Shortcuts for information about each toolbar.

Win	A *ribbon tab*, *ribbon group*, or *modal ribbon tab*, are available in the Windows version. See Figure 2-1 for an example of the Windows **Home** toolbar.

Mac Linux	The *Model Toolbar* and *Contextual Toolbar* are available in the cross-platform version, primarily for macOS and Linux users. See Figure 2-12 for an example of these toolbars.

ABOUT THE SCREENSHOTS USED IN THIS MANUAL

The screenshots used throughout this reference manual are captured using the Windows platform except when there are clear differences other than fonts or cosmetic appearance.

ADDITIONAL INTERNET RESOURCES

A number of internet resources have more information about COMSOL, including licensing and technical information. The electronic documentation, topic-based (or context-based) help, and the application libraries are all accessed through the COMSOL Desktop.

!	If you are reading the documentation as a PDF file on your computer, the blue links do not work to open an application or content referenced in a different guide. However, if you are using the Help system in COMSOL Multiphysics, these links work to open other modules, application examples, and documentation sets.

CONTACTING COMSOL BY EMAIL

For general product information, contact COMSOL at info@comsol.com.

COMSOL ACCESS AND TECHNICAL SUPPORT

To receive technical support from COMSOL for the COMSOL products, please contact your local COMSOL representative or send your questions to support@comsol.com. An automatic notification and a case number are

sent to you by email. You can also access technical support, software updates, license information, and other resources by registering for a COMSOL Access account.

COMSOL ONLINE RESOURCES

COMSOL website	www.comsol.com
Contact COMSOL	www.comsol.com/contact
COMSOL Access	www.comsol.com/access
Support Center	www.comsol.com/support
Product Download	www.comsol.com/product-download
Product Updates	www.comsol.com/support/updates
COMSOL Blog	www.comsol.com/blogs
Discussion Forum	www.comsol.com/community
Events	www.comsol.com/events
COMSOL Video Gallery	www.comsol.com/video
Support Knowledge Base	www.comsol.com/support/knowledgebase

The Help Window and Topic-Based Help

The **Help** window is useful as it is connected to many of the features in the COMSOL Desktop. This concept is called *topic-based help* or *context help*. You can also search and access all the HTML documentation content from this window.

!	The **Help** system automatically starts a web server using port 8090 on the computer where COMSOL Multiphysics is installed. Depending on the security settings, you might get a question to allow that port to be used the first time the help system is started. The operating system might also issue a firewall security warning. To use Help, allow COMSOL Multiphysics access through the firewall.

To learn more about a node in the Model Builder, or a window on the Desktop, click to highlight a node or window, then press F1. The **Help** window opens and displays the topic information about the selected feature.

OPENING THE HELP WINDOW AND THE TOPIC-BASED HELP

There are several ways to open the **Help** window:

- Press F1.
- In the main toolbar, click **Help** (?).
- In the upper-right corner of the COMSOL Desktop, click the (?) button.
- From the main menu, select **File>Help** (Windows) **Help>Help** (Linux and macOS).
- Right-click any node in the **Model Builder** and select **Help**.

ABOUT USING THE F1 KEY TO ACCESS CONTEXT HELP

To display topic-based (context) information in the **Help** window, on the COMSOL Desktop:

- Click to highlight a node in the Model Builder tree. For example, the **Component** or **Geometry** node.

- Click a window tab, for example, **Model Builder**, **Add Study**, or **Messages**.
- For Windows users, hover over ribbon buttons or menu items to display a *tooltip*. While the tooltip is showing, you can press F1 to display more detail.

At the top of the **Help** window you find the tools and search functionality listed in the table below. Also, above the help text, a clickable breadcrumb trail shows the location of the displayed contents in the COMSOL documentation set. Click any part of the trail to move to that level in the COMSOL documentation.

!	In some cases you need to refocus the context help on its target before pressing F1. Try clicking to highlight a node, a window, or the button or click to focus on the Help window, hover over a toolbar button (Windows only) and press F1.

TABLE 1-1: THE HELP AND DOCUMENTATION TOOLBARS

BUTTON	NAME	DESCRIPTION
		Click the **Home** button or select the COMSOL Documentation top node in the table of contents tree to return to the COMSOL Documentation window home page. Not available when showing context help in the Help window.
	Show Table of Contents/ Show Topic	When a help topic page is shown in the Help window, click **Show Table of Contents** to open a tree-based menu of the COMSOL documentation. When you select a node in the table of contents tree the corresponding topic is shown on the topic page. Alternatively, click again (**Show Topic**) to return to the topic page.
	Search	On the Help window, click to open the search engine to look for contents in the COMSOL documentation. Search results are shown sorted by product. On the Documentation window, enter search terms in the field and choose the **Search scope** — **All documents**, **Selected only**, or **Application libraries**. See Searching Help and Documentation Content for more information about search terms you can use.
/	Back	Navigates backward to the previous page in the Help or Documentation window's browser history.
/	Forward	Navigates forward in the browser history, but only to the end of the current list.
	Sticky Help	On the Help window, click the **Sticky Help** button to lock the current help window (the icon is highlighted), which can be useful to keep some help topic or model instruction active, or to release the window and view topic-based (context) help when a node or window is clicked.
	Show in External Browser	On the Help window, click the **Show in External Browser** button to show the current help topic in an external web browser.
Previous Section		Navigates backward to the previous section in the documentation.
Next Section		Navigates forward to the next section in the documentation.

CHANGING THE DEFAULT DOCUMENTATION AND HELP SETTINGS

To edit the following settings, open The Preferences Dialog Box and click **Help**.

Locate the **Target** area and choose **Documentation window** (the default) from the **Show documentation in** list to show the help contents in the **Documentation** window that is included in the COMSOL Desktop environment (default), or select **External browser** to display the help contents in a separate web browser. For further details on how to access and use the documentation, see the section The Documentation Window below. Similarly, using the **Show help in** list, you can choose between **Help window** (default) and **External browser** to show topic-based help in the **Help**

window inside the COMSOL Desktop or in an external web browser, respectively. When showing topic-based help in an external browser, you need to press F1, choose **Help>Help**, or select the **Help** context menu item (when applicable) to trigger an update of the browser's contents. The **PDF-file target** setting controls what happens when you click a PDF link on the COMSOL Documentation entry page. Choose **In place** to display PDF documents using the native browser's PDF display settings, or choose **New window** to launch them in the default system application for PDF-files. On Windows, the native browser is always Microsoft Edge or Internet Explorer.

In the **Source** area, set the **Location** to **Local** to display help using locally installed help files or to **Online** to access help from the COMSOL website. For the **Local** option, edit the **Documentation root directory** file path as required. The default file paths are based on the platform:

- On Windows `C:\Program Files\COMSOL\COMSOL55\Multiphysics\doc`, or generically `COMSOL55\doc`.
- For macOS and Linux, under the main COMSOL installation directory: `COMSOL55/Multiphysics/doc`.

Proxy Server Settings

If you connect to the internet through a web proxy, you can use the controls in the **Proxy server settings** area to specify the proxy server settings to use when communicating with the COMSOL website for displaying online help in integrated mode as well as for performing updates of the COMSOL Application Library and the COMSOL Part Library (see The Application Library Update Window and The Part Library Update Window for further details about these services).

The **Configuration** list has the following options:

- **No proxy server**: Connect to the update server directly, bypassing any proxies. This is the default setting.
- **Use system settings**: Use the system-wide proxy server settings defined on your computer.
- **Manual**: Choose this alternative if you want to specify a proxy server by entering the name (or IP address) and port number in the **Server** and **Port number** fields. The default port number is 443, which is the default for HTTP secure (HTTPS). If the proxy server requires authentication, you are asked to provide username and password the first time in each COMSOL session you access documentation or update the COMSOL Application Library or Part Library.

Selecting a Web Browser

In the **General** section of the **Preferences** dialog, under **Web browser** (Windows and Linux only), you can choose which browser the COMSOL Multiphysics software should use to show pages on the COMSOL website and documentation when using the web browser mode. The following settings are available:

- On Windows: Choose the **Program** setting **System default** to use the default system web browser. Alternatively, choose **Custom** and then give the path to an **Executable** location for a different browser installed on your computer.
- On Linux: Type the path to the web browser directly in the **Executable** field, or click the **Browse** button and then point to the executable file on the file system.

	On macOS, this setting is not available, and COMSOL Multiphysics always uses the system's default web browser.

Win	To open the **Documentation** window: • Press Ctrl+F1. • From the **File** menu, select **Help>Documentation**.

Mac Linux	To open the **Documentation** window: • Press Ctrl+F1 • In the main toolbar, click the **Documentation** ( ) button. • From the **Help** menu, select **Documentation**.

In the Documentation window (or a browser window, depending on your preference settings), you can navigate to PDF or HTML versions of the documentation (availability is based on your license), as well as search all the documentation, save or open PDFs, or view the HTML content in this window. There are different ways to access the same information using either the left-hand side (Figure 1-1) or right-hand side (Figure 1-2) of the window.

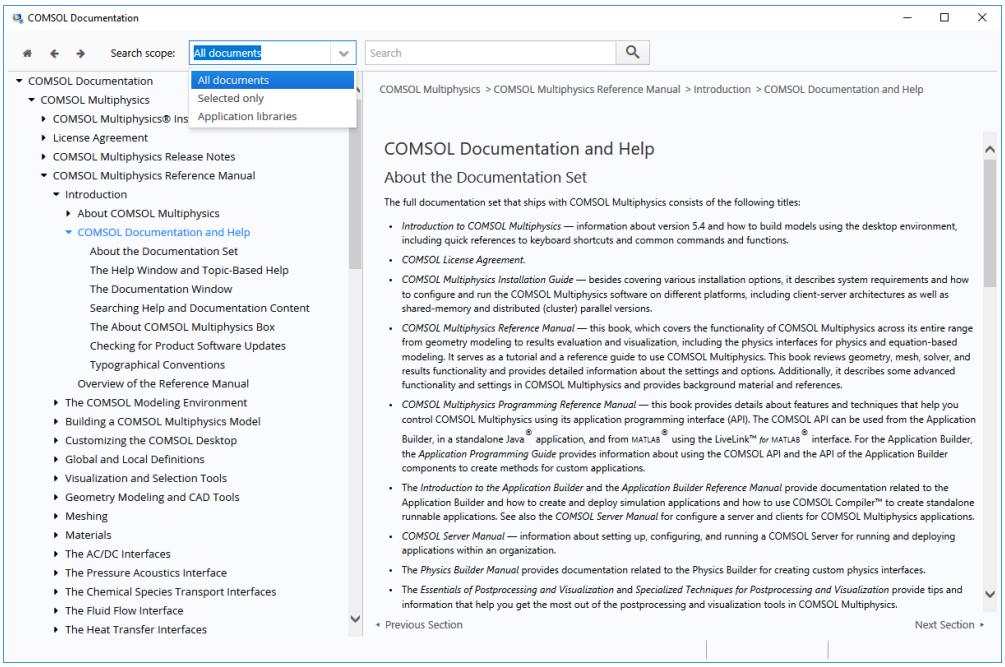

Figure 1-1: Based on your license, links to the HTML versions of the product documentation are accessed and can be browsed in the tree. When you click a topic in the tree the information displays to the right. You can also adjust the search scope.

Figure 1-2: Based on your license, links to PDF and HTML versions of the product documentation are accessed from this window. When you click HTML it jumps to the first page of the documentation for that product; when you click PDF you can Open or Save a full PDF version of that document.

	• The Help Window and Topic-Based Help • Table 1-1 for a list of the Documentation toolbar buttons.

Searching Help and Documentation Content

After you open The Help Window and Topic-Based Help, click the Search button ( ) to open the search engine and search the HTML content. Search results are shown sorted by product. You can also search in the contents of The Documentation Window.

SEARCHING THE DOCUMENTATION

On the **Documentation** window, you can adjust the **Search scope** (see Figure 1-1). Enter a search term in the **Search expression** field and then select **All documents**, **Selected only**, or **Application libraries** from the list to narrow or expand the search scope as needed. For **Selected only** (Figure 1-3), first click a branch in the tree (for example, **COMSOL Multiphysics Reference Manual**) and then the search includes all the documents below the selected node until the beginning of the next branch. In this example it searches until the end of the Troubleshooting License Errors section.

> The first search can take a couple of minutes while the search index is generated.

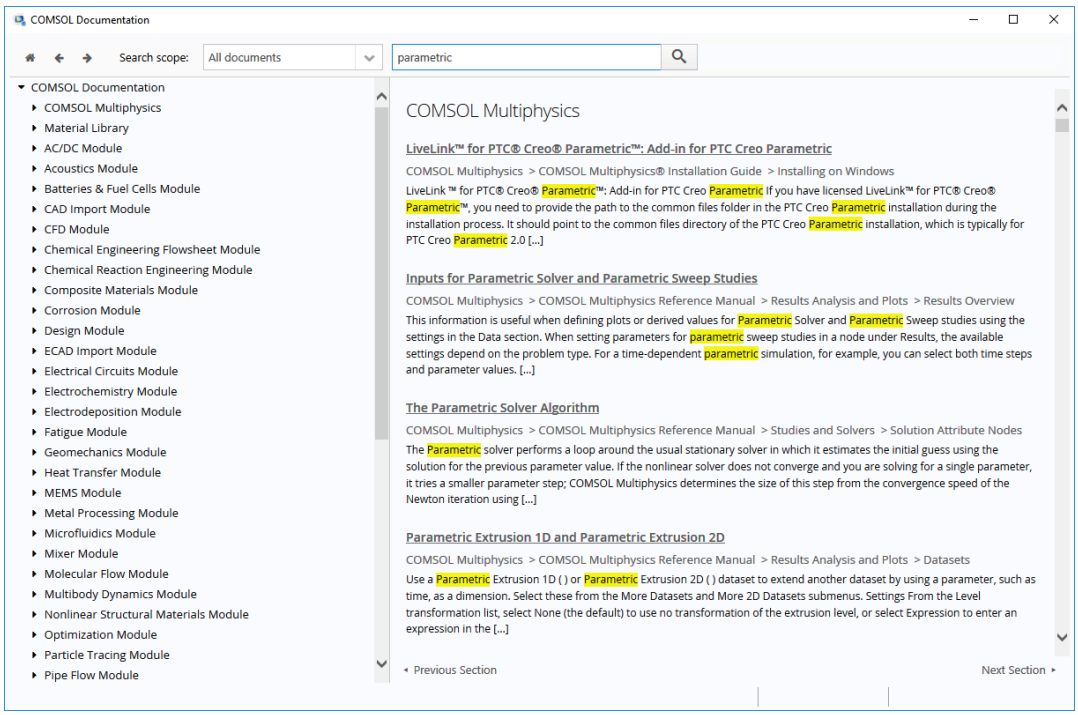

Figure 1-3: When searching in the Documentation window, choose a Search scope to search only a selected portion of the documentation, all the documentation, or only the Application Libraries.

SEARCH PARAMETERS FOR HELP AND THE DOCUMENTATION

Some examples of search parameters you can use:

TABLE 1-2: SEARCH PARAMETERS FOR THE COMSOL HELP SYSTEM

OPERATOR	EXAMPLE	SEARCH RESULT EXAMPLE
&&, AND	block && cone block AND cone	Results include all instances of the words.
OR, ||	block OR cone block || cone	Results include any of the listed words.
+, –	+block –cone	Search for one term (+block) but not the other term (–cone).
“, ~	“plot line”~10	Search for the words enclosed in the quotation marks (plot line) within (~) a certain number of words (10) from each other.
~	excentric~	Search for something “almost” spelled in a particular way. For example, excentric. The results include eccentric cone.

TABLE 1-2: SEARCH PARAMETERS FOR THE COMSOL HELP SYSTEM

OPERATOR	EXAMPLE	SEARCH RESULT EXAMPLE
?	h?t	Use in a search query to mean exactly one character. For example, search for all instances of hat, hit, or hut where ? represents a, i, or u, or any other letter between h and t.
*	strain* strain*d	The asterisk (*) is a wildcard character. Search for any word that starts with "strain". Results include strain-based, strain-rate, or strain, for example. The asterisk represents any number of characters. If the asterisk is used in the middle of the word, it searches for one letter between "n" and "d". The result in this example is strained. You can use the asterisk before and after the word in order to search for it in the middle of a longer word or expression, For example, `*setdefaultgeometry*` finds `ModelUtil.setDefaultGeometryKernel`.
enclosed quotation marks " "	"time dependent study"	Use quotation marks around a text string to search for exactly that phrase; that is, to search for the words in the order given within the quotation marks.

The About COMSOL Multiphysics Box

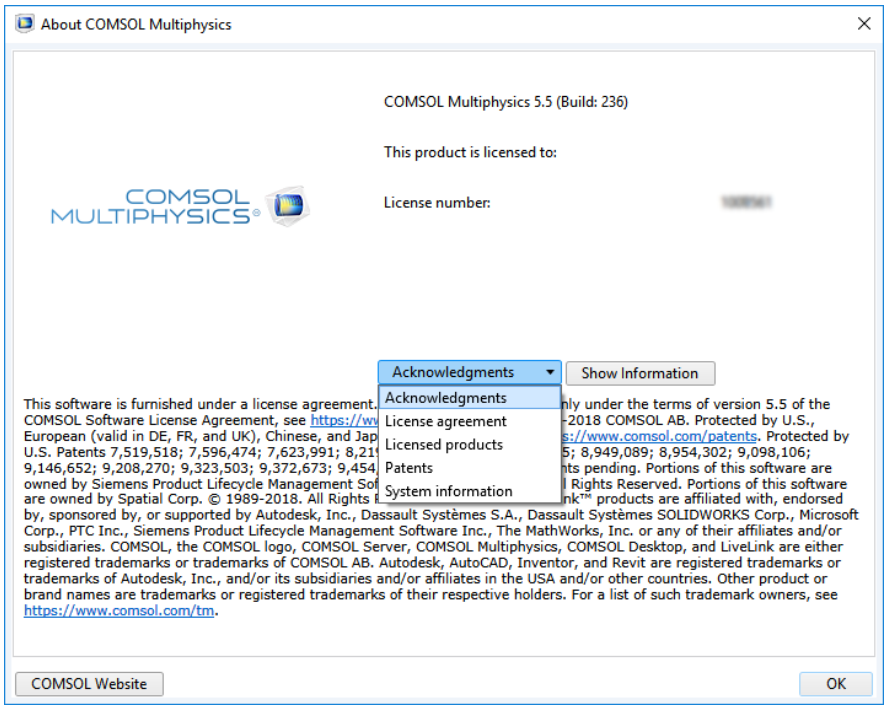

Figure 1-4: The About COMSOL Multiphysics dialog box with the setting to show the Acknowledgments list.

To open the **About COMSOL Multiphysics** ( ) window:

- For Windows users, select it from the **File** menu.
- For macOS and Linux (cross platform) users, choose it from the **Help** menu.

In addition to copyright and patent information, the **About COMSOL Multiphysics** dialog box has the following information:

- The **Version number**

- The user or company **This product is licensed to**
- The **License number**

Select an option from the list below and then click **Show Information** to open a separate window of the same name containing this information:

- Select **Acknowledgments** to show information about third-party software components, including license notices required by the software component authors. Then click **Show Information**.
- Select **License agreement** to show the COMSOL Multiphysics software license agreement. Then click **Show Information**.
- Select **Licensed products** to show the licensed COMSOL products, including the number of used licenses and the total number of licenses for each product. Then click **Show Information**.
- Select **Patents** to show the patents that the COMSOL software products are protected by. Then click **Show Information**.
- Select **System information** to show a list of system properties, which can be useful for troubleshooting purposes, for example. Then click **Show Information**.
- Click **COMSOL Web Page** to open your web browser on the main COMSOL web page.

	You can also get information about the licensed products from the **Licensed and Used Products in Session** window.

	The Root Settings and Properties Windows

Checking for Product Software Updates

COMSOL provides product software updates that improve the software and correct any issues found.

To check if a product update is available, from the **File** menu select **Help>Check for Product Updates** ( ).

The program then checks if an update that is applicable, but not yet installed, is available from the COMSOL website.

If an update is available, an **Update** dialog box appears; click **Download** to download the update directly, or click **Browse Update** to open the COMSOL website where you can read about and download the update.

If no updates are available, the **Update** dialog box reports that your COMSOL installation is up to date. Open The Preferences Dialog Box and click **Updates** to select the **Check for updates at launch** check box to make the program check for updates each time you launch the COMSOL Multiphysics program.

Typographical Conventions

All documentation uses a set of consistent typographical conventions that make it easier to follow the discussion, understand what you can expect to see on the graphical user interface (GUI), and know which data must be entered into various data-entry fields.

In particular, these conventions are used throughout the documentation:

CONVENTION	EXAMPLE
text highlighted in blue	Click text highlighted in blue to go to other information in the PDF. When you are using the help desk in COMSOL, links to other modules, application examples, and documentation sets also work.
boldface font	A **boldface** font indicates that the given word(s) appear exactly that way on the COMSOL Desktop (or, for toolbar buttons, in the corresponding tooltip). For example, the **Model Builder** window is often referred to, and this is the window that contains the model tree. As another example, the instructions might say to click the **Zoom Extents** button (), and this means that when you hover over the button with your mouse, the same label displays on the COMSOL Desktop.
italic font	An *italic* font is the introduction of important terminology. Expect to find an explanation in the same paragraph or in the Glossary. The names of other documents in the COMSOL documentation set are also in *italic* font.
Forward arrow symbol **>**	The forward arrow symbol **>** means you select a series of menu items or nodes in a specific order. For example, **Component>Mesh** is equivalent to: Under the **Component** node, click the **Mesh** node.
`code` (monospace) font	A `code` (monospace) font means you make a keyboard entry in the COMSOL Desktop. You might see an instruction such as "Enter (or type) 1.25 in the **Current density** field." The monospace font is also used to indicate programming code and variable names.
Italic *`code`* (monospace) font	An italic *`code`* (monospace) font indicates user inputs and parts of names that can vary or be defined by the user.
Arrow brackets `<>` following the `code` (monospace) or *`code`* (italic) fonts	The arrow brackets included in, for example, programming examples (after a monospace `code` or an italic *`code`* font) mean that the content in the string can be freely chosen or entered by the user, such as a feature Name or Label. For example, `model.geom(<label>)`, where `<label>` is the geometry's label. When the string is predefined by COMSOL Multiphysics, no bracket is used and this indicates that this is a finite set, such as a feature type.

KEY TO THE GRAPHICS

Throughout the documentation, icons are used to help organize the information. These icons vary in importance, but it is recommended that you read these text boxes.

ICON	NAME	DESCRIPTION
	Caution	A Caution icon indicates that the user should proceed carefully and consider the next steps. It might mean that an action is required, or if the instructions are not followed, that there will be problems with the model solution.
	Important	An Important icon indicates that the information provided is key to the model building, design, or solution. The information is of higher importance than a note or tip, and the user should endeavor to follow the instructions.
	Note	A Note icon indicates that the information can be of use to the user. It is recommended that the user reads the text.
	Tip	A Tip icon is used to provide information, reminders, shortcuts, suggestions for improving model design, and other information that might be useful.
	See Also	The See Also icon indicates that other useful information is located in the named section. If you are working online, click the hyperlink to go to the information directly. When the link is outside of the current PDF document, the text indicates this, for example, "See The Laminar Flow Interface in the *COMSOL Multiphysics Reference Manual*." Note that if you are in the online help, the link works.

ICON	NAME	DESCRIPTION
	An example from the Application Libraries	The icon is used in the documentation to indicate examples that demostrate the use of some functionality. In some cases, an example is only available if you have a license for a specific module. The Application Library path describes how to find the actual file in COMSOL Multiphysics, for example: If you have the RF Module, see *Radar Cross Section*: Application Library path **RF_Module/Scattering_and_RCS/radar_cross_section**
Space Dimension		Another set of icons is used in the Model Builder — the component space dimension is indicated by 1D axial symmetry , 2D , 2D axial symmetry , and 3D icons. The 1D and 0D icons are not used but the space dimension is indicated. These icons are also used in the documentation to list the differences to a physics interface, node, or theory section, which are based on space dimension.
Win	Windows	This icon means that the information is specific to a Microsoft Windows operating system.
Mac	macOS	This icon means that the information is specific to a macOS operating system. This may also be referred to as cross-platform when describing how to access a feature or menu on the COMSOL Desktop.
Linux	Linux	This icon means that the information is specific to a Linux operating system. This may also be referred to as cross-platform when describing how to access a feature or menu on the COMSOL Desktop.

Overview of the Reference Manual

This *COMSOL Multiphysics Reference Manual* provides comprehensive information about all modeling steps using the COMSOL Multiphysics software. See the individual module manuals for information specific to a specialized module (see The COMSOL Multiphysics Modules and Interfacing Options for a link to the COMSOL website).

	As detailed in the section COMSOL Documentation and Help this information can also be searched from the **Help** system in COMSOL Multiphysics.

TABLE OF CONTENTS, GLOSSARY, AND INDEX

To help you navigate through this guide, see the Contents, Glossary, and Index.

ENVIRONMENT

The COMSOL Modeling Environment chapter provides an overview of the COMSOL modeling environment as controlled by the COMSOL Desktop and the tools and windows it provides in the Windows version as well as the cross-platform version. Topics include The COMSOL Desktop, The Application Libraries Window, The Physics Interfaces, Creating a New Model with the Model Wizard, and a key to the icons including links in the Toolbars and Keyboard Shortcuts section.

MODELING

Building a COMSOL Multiphysics Model explains a range of methods and topics including information about the following: details about an introduction to The Model Builder, The Component Node, The Physics Nodes, Selecting Physics Interfaces, Analyzing Model Convergence and Accuracy, Specifying Model Equation Settings, Boundary Conditions, Using Units, Numerical Stabilization, and much more.

CUSTOMIZING THE COMSOL DESKTOP

In the Customizing the COMSOL Desktop chapter, the settings are described related to Customizing a Model, changing Preferences Settings, and details about the Showing More Options.

DEFINITIONS

The Global and Local Definitions chapter describes the global and local (component) definitions features. Depending on the geometric scope, you add the nodes described in this section to either the Global Definitions node or under the Definitions node for a particular component. Topics include Operators, Functions, and Constants, Predefined and Built-In Variables, Mass Properties, Functions, Nonlocal Couplings and Coupling Operators, Coordinate Systems, Identity and Contact Pairs, Probes, and Infinite Elements, Perfectly Matched Layers, and Absorbing Layers.

VISUALIZATION AND SELECTION

The Visualization and Selection Tools chapter describes the tools used to visualize and control how you view models and select parts of the model geometry in the Graphics window and the Settings windows. Important topics include Working with Geometric Entities, Creating Named Selections, and User-Defined Views.

GEOMETRY

The Geometry Modeling and CAD Tools chapter covers geometry modeling in 1D, 2D, and 3D with examples of solid modeling, boundary modeling, Boolean operators, and other CAD tools in COMSOL. In addition, it shows how to use the tools for exploring geometric properties, such as volumes and surfaces. There is also information

about using external CAD data. Topics include Creating a Geometry for Analysis, Working with Geometry Sequences, Geometric Primitives, Geometry Operations, and Virtual Geometry and Mesh Control Operations.

MESH

The Meshing chapter summarizes how to create and control your mesh for 1D, 2D, and 3D geometries in the COMSOL Multiphysics software. It also explains these topics, which include: Creating a Mesh for Analysis, Meshing Techniques, Meshing Operations and Attributes, and Importing and Exporting Meshes.

MATERIAL

The Materials chapter introduces you to the material databases included with the COMSOL products. Topics include a Materials Overview, Working with Materials, Material Properties Reference, User-Defined Materials and Libraries, Using Functions in Materials, and Module-Specific Material Databases.

AC/DC

The AC/DC Interfaces chapter explains the physics interfaces available for modeling electromagnetics, which you find under the AC/DC branch ( ) when adding a physics interface. It also contains sections about general fundamentals and theory for electric fields.

ACOUSTICS

The Pressure Acoustics Interface chapter describes how to use the Pressure Acoustics, Frequency Domain interface, found under the Acoustics branch ( ) when adding a physics interface, for modeling and simulation of acoustics and vibrations.

CHEMICAL SPECIES TRANSPORT

The Chemical Species Transport Interfaces chapter explains how to use the Transport of Diluted Species interface, found under the Chemical Species Transport branch ( ) when adding a physics interface, to model and simulate mass transfer by diffusion and convection based on Fick's law of diffusion.

FLUID FLOW

The Fluid Flow Interface chapter explains how to use the Laminar Flow interface, found under the Fluid Flow>Single-Phase Flow branch ( ) when adding a physics interface, to model and simulate fluid mechanics for laminar, incompressible fluids.

HEAT TRANSFER

The Heat Transfer Interfaces chapter describes the different types of Heat Transfer interfaces (Heat Transfer in Solids and Heat Transfer in Fluids), and the Joule Heating interface, all found under the Heat Transfer branch ( ) when adding a physics interface.

SOLID MECHANICS

The Solid Mechanics chapter explains how to use the Solid Mechanics interface, found under the Structural Mechanics branch ( ) when adding a physics interface, to simulate and analyze applications involving solid mechanics. The physics interface is used for stress analysis and general solid mechanics simulation.

EQUATION-BASED MODELING

The Equation-Based Modeling chapter describes the use of the mathematics interfaces, found under the Mathematics branch (Δu) when adding a physics interface, which are used for equation-based modeling. With those interfaces you can solve various types of PDEs using different formulations. You can also solve ODEs and other global equations, add events and curvilinear coordinates, compute sensitivities, and add moving interfaces and deforming meshes.

SENSITIVITY ANALYSIS

The Sensitivity Analysis chapter describes how to perform sensitivity analysis using the Sensitivity interface, found under the Mathematics>Optimization and Sensitivity ( ) branch when adding a physics interface.

DEFORMED MESHES

The Deformed Geometry and Moving Mesh chapter explains how to use the modeling physics interfaces that control mesh deformation. These are found under the **Mathematics>Deformed Mesh** ( ) branch when adding a physics interface. It also contains fundamentals about deformed meshes and information about the Eulerian and Lagrangian formulations of the physics, the frame types that support these formulations, and the arbitrary Lagrangian-Eulerian (ALE) method.

STUDIES AND SOLVERS

The Studies and Solvers chapter lists the various types of solvers and studies in the COMSOL Multiphysics software and explains the study steps and solver configurations. It also describes the major solvers and settings as well as batch jobs, parametric sweeps, and cluster computing. See also the *Optimization Module Manual* for other supplementary information.

RESULTS AND VISUALIZATION

The Results Analysis and Plots chapter helps you analyze results in COMSOL Multiphysics and describes numerous result-evaluation and visualization tools, including advanced graphics, data display, and export functions. Topics include Results Overview, Datasets, Plot Groups and Plots, Derived Values, Evaluation Groups, and Tables, Exporting Data and Images, Reports, and Printing and Capturing Screenshots.

RUNNING COMSOL MULTIPHYSICS

Running COMSOL Multiphysics is an overview of the different ways that you can run the COMSOL Multiphysics software in addition to running the COMSOL Desktop on a dedicated computer, including client-server and distributed-memory architectures and cloud-based computing. This chapter also includes information about how to compile COMSOL applications from the command line using COMSOL Compiler.

2

The COMSOL Modeling Environment

The COMSOL Desktop® provides a complete and integrated modeling environment for creating, analyzing, and visualizing multiphysics models. This chapter provides an overview of the COMSOL Multiphysics® modeling environment as controlled by the COMSOL Desktop and the tools and windows it provides.

In this chapter:

- The COMSOL Desktop
- The Application Libraries Window
- The Physics Interfaces
- Creating a New Model
- Toolbars and Keyboard Shortcuts

The COMSOL Desktop

This section is an overview of the major components in the COMSOL Multiphysics environment. These components are integrated into the *COMSOL Desktop*, which you can personalize to your own modeling needs and preferences. Primarily consisting of the *Model Builder* nodes, *Settings* windows, and *Graphics* windows, other dockable windows can be opened, closed, and organized according to the modeling settings you need to access and the GUI configuration you want to work in. You can save these configurations, and the last opened configuration is always displayed when you open COMSOL again.

	• Creating a New Model • Building a COMSOL Multiphysics Model • Customizing the COMSOL Desktop • The Model Builder

Mac Linux	The COMSOL Desktop in the cross-platform version, primarily for the Linux and macOS operating systems, looks slightly different than for the Windows operating system (shown in Figure 2-1). The primary difference is that the Main Menu and Main Toolbar are used instead of ribbons. Otherwise, the default windows (Model Builder, Graphics, Settings, Log, Progress, and Messages) are in the same location on the default desktop layout. See The COMSOL Desktop Menus and Toolbars for more details.

	You can also launch the cross-platform version on Windows using `comsolxpl.exe`.

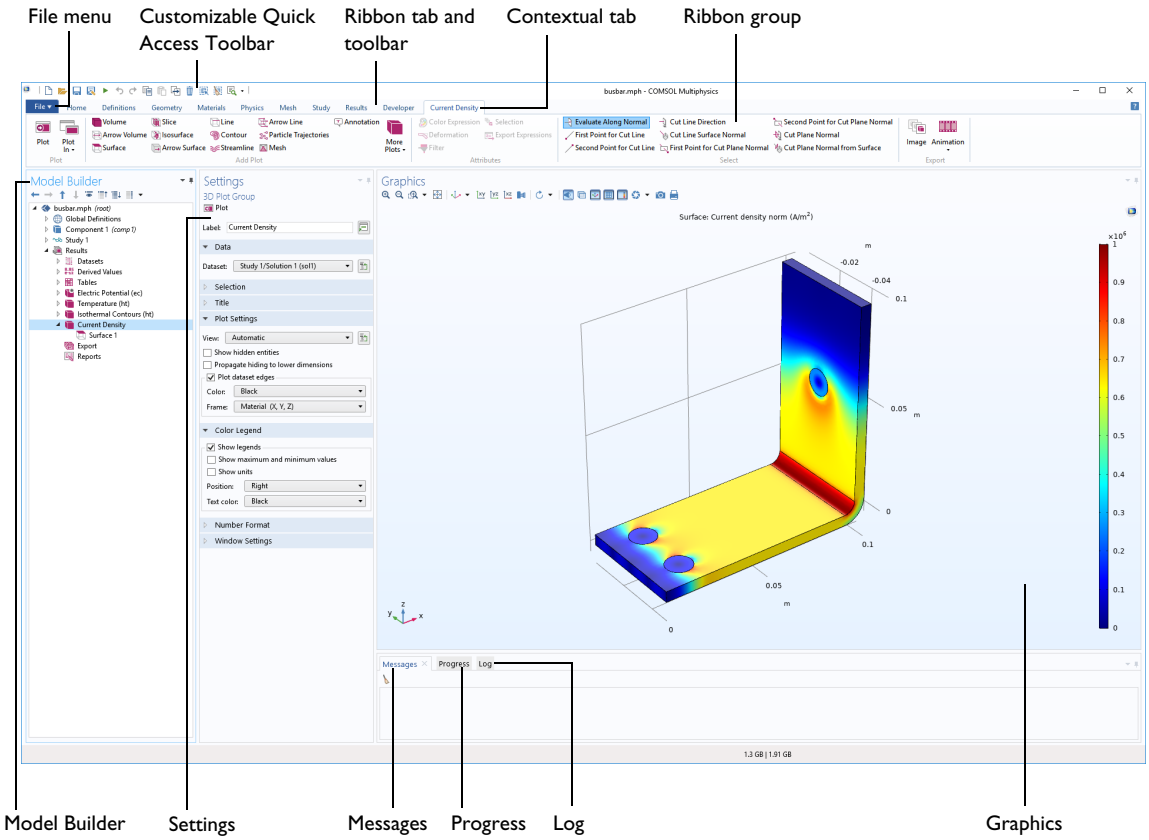

Figure 2-1: The default COMSOL Desktop with its major windows in a widescreen layout. The ribbon tabs and groups are available for Windows users. For macOS and Linux users the layout is similar but you access some options from the main menu or contextual toolbars.

Win	A *ribbon tab*, *ribbon group*, or *modal ribbon tab*, are available in the Windows version. In general, these are referred to as *toolbars*. See Figure 2-1 for an example of the Windows **Home** toolbar. Also see Figure 2-2 for an example of how the ribbon changes when a window is resized.

Mac Linux	The *Model Toolbar* and *Contextual Toolbar* are available in the cross-platform version, primarily for macOS and Linux users. See Figure 2-12 for an example of these toolbars.

ABOUT CHANGES TO THE RIBBON DISPLAY (WINDOWS USERS)

When the complete COMSOL Desktop is resized, the toolbar collapses and the buttons are grouped into menus. In Figure 2-2, all the groups in the **Home** toolbar are collapsed into menus. As the window is widened, the ribbon groups expand again to include the options as buttons or other submenus.

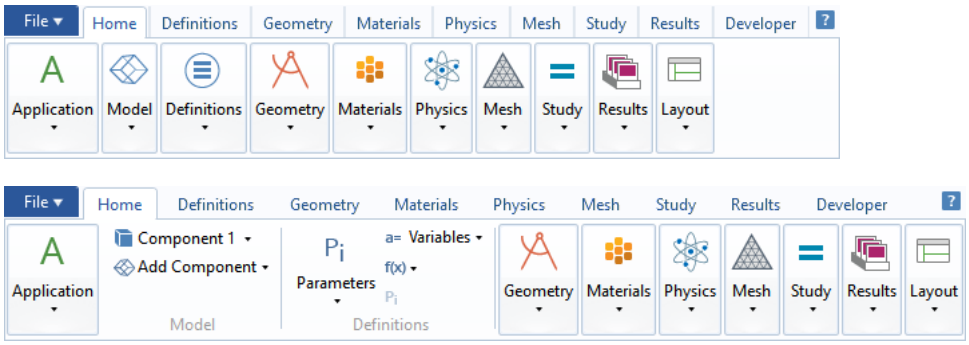

Figure 2-2: When the COMSOL Desktop is resized, the ribbon toolbar buttons are grouped together with the ribbon tab group name. In this example for the Home toolbar, all the buttons are available from a menu, such as Definitions, Geometry, Material, Physics, and so forth (top). As the window is widened, the menus expand accordingly (bottom).

OPENING THE APPLICATION BUILDER FROM THE COMSOL DESKTOP

When you are on the COMSOL Desktop you can toggle between the Application Builder and COMSOL Multiphysics. In the **Home** toolbar click **Application Builder** to open the Application Editor and modify the user interface of the application and to create and edit code for the application. You can also press Ctrl+Shift+A.

Conversely, when you are in the Application Builder, you can click **Model Builder** in the **Home** toolbar to return to COMSOL Multiphysics. You can also press Ctrl+Shift+M.

OVERVIEW

The rest of this section introduces you to the features of the COMSOL Desktop, explains some basic navigation, and provides you with an overview of the windows, toolbars, and menus available. In this chapter you will also learn about the model file formats, the options to save files, and the units systems available for modeling.

- Basic Navigation
- Adjusting Window Location and Size on the Desktop
- The COMSOL Desktop Windows
- The COMSOL Desktop Menus and Toolbars
- Windows Toolbars and Menus
- Cross Platform (macOS and Linux) Toolbars and Menus
- Features Available on Toolbars and From Menus
- The Messages Window
- About the COMSOL Model File Formats
- Saving COMSOL Files
- Saving and Opening Recovery Files
- The Root Settings and Properties Windows
- Unit Systems

After this introductory overview, The Application Libraries Window section explains how to work with the application libraries included with the COMSOL Multiphysics products. The Physics Interfaces section lists the interfaces available with a basic COMSOL Multiphysics license. This prepares you to start creating a new model.

The next section, Creating a New Model, shows you how to use the Model Wizard to begin building a new model by choosing a physics interface and study combination.

The last section, Toolbars and Keyboard Shortcuts, is a quick reference to all the features found on the toolbars. It includes links to the information contained throughout this reference manual.

Basic Navigation

Basic navigation on the COMSOL Desktop extensively involves the nodes in the Model Builder as well as moving between windows and sections on **Settings** windows.

WORKING WITH NODES IN THE MODEL BUILDER

The following methods are available to select nodes, expand and collapse branches, open the **Settings** window, or move up and down the nodes in the model tree:

- Click a node in the Model Builder to highlight it and to open the associated **Settings** window. See Settings and Properties Windows for Feature Nodes. You can also adjust how you are Displaying Node Names, Tags, and Types in the Model Builder.
- Once a node is highlighted, there are many things you can do; for example, you can copy, duplicate, delete, and move most nodes around. See Copying, Pasting, and Duplicating Nodes, Moving Nodes in the Model Builder, and Clearing Sequences and Deleting Sequences or Nodes.
- Right-click a node to open a context menu. See Opening Context Menus and Adding Nodes.
- Group related nodes together, for better overview and structure for the model tree. See Custom Grouping of Nodes.
- When a node is highlighted, use the up arrow key on the keyboard to move to the node above; to move to the node below, use the down arrow key.
- To expand a branch to display all nodes in the branch, click the small left-pointing white triangle next to the branch icon in the model tree, or press the right arrow key. To collapse a branch to display only the main branch node, click the small downward-right pointing black triangle next to the branch icon in the model tree, or press the left arrow key. See The Model Builder Toolbar for information about how to collapse or expand all branches.
- A highlighted node is also dynamic and its appearance can change based on where in the modeling process you are. See Dynamic Nodes in the Model Builder for a list of these visual cues.

The COMSOL Desktop Menus and Toolbars

MOVING BETWEEN WINDOWS AND SECTIONS ON THE COMSOL DESKTOP

Keyboard shortcuts are quick ways to navigate between the windows on the COMSOL Desktop and to switch focus between windows and **Settings** window sections:

- Press Ctrl+Tab to switch focus to the next window on the desktop.
- Press Ctrl+Shift+Tab to switch focus to the previous window in the desktop.
- Press Ctrl+Alt+left arrow to switch focus to the **Model Builder** window.
- Press Ctrl+Alt+right arrow to switch focus to the **Settings** window.

- Press Ctrl+Alt+up arrow to switch focus to the previous section in the **Settings** window.
- Press Ctrl+Alt+down arrow to switch focus to the next section in the **Settings** window.

	The section Keyboard Shortcuts lists additional shortcuts for all operating systems.

	• The COMSOL Desktop • The Model Builder • Creating a New Model

Adjusting Window Location and Size on the Desktop

MOVING AND RESIZING THE WINDOW

- To move a window, click-and-drag the window tab (the tab is where the window name displays, **Model Builder** for example) to where you want it.
- To resize a window, hover your mouse over the window borders until a double arrow displays. Click-and-drag the borders between windows until the layout appears as you want it to be.

	At any time, in the **Home** toolbar, **Layout** group, click the **Reset desktop** button.

CLOSING A WINDOW

Not all windows in the COMSOL Desktop are closable. Windows that you can close have an **X** to the right of the window tab. Click that **X**, right-click the window and choose **Close**, or press Ctrl+F4 (Command+W on macOS). You can reopen a closed window by choosing it from the **Windows** menu (on the **Home** toolbar in the Windows® version), for the **Properties** and **Statistics** window, by right-clicking a node and choosing **Properties** or **Statistics** (for mesh statistics), respectively.

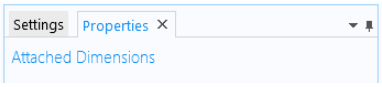

Figure 2-3: Click the X to close the Properties window. The Settings window cannot be closed.

FLOATING/DETACHING A WINDOW

Win	To detach a window to move and resize it, right-click the window tab and select **Float**. Right-click the window and choose **Dock** to return it to its default location on the Desktop.

Mac Linux	To detach a window to move and resize it, right-click the window tab and select **Detached**. Right-click and select the option again to dock it to the COMSOL Desktop, or drag and drop it back to where you want it.

HIDING OR PINNING A WINDOW TO THE SIDE OF THE DESKTOP (WINDOWS USERS)

To hide a window, right-click the window and select **Hide**. The window is minimized along the side of the Desktop (see Figure 2-4). Hover over the name to view a hidden/minimized window. To restore a hidden window, either right-click the window, or from the list, select **Float** or **Dock**.

Pinning a window performs the same action as hiding it. Click the **Toggle hide** button in the top-right corner of any window to hide and pin it to the side of the COMSOL Desktop. To return the window to its unhidden state, hover over the window name to open it, then click the **Toggle hide** button (now laying on its side, see Figure 2-4) to restore the window to its default location.

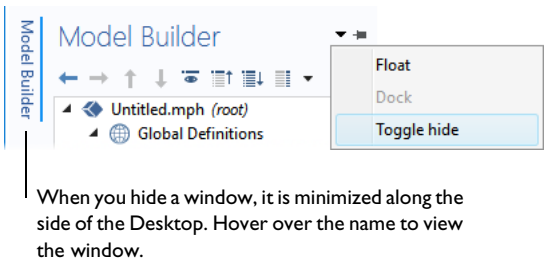

Figure 2-4: A hidden window is minimized along the side of the Desktop. Hover over the window name to view it. You can then choose to Float or Dock the window (either right-click the window or choose options from the menu), or click the Toggle hide icon to restore it to the default location on the Desktop.

USING THE POSITION GUIDES (WINDOWS USERS)

When customizing your COMSOL Desktop, or when you want to return a floating window to the Desktop (dock it), there are several visual guides available to assist.

Click and hold the mouse on a window to reposition or dock it on the Desktop. This displays the positioning guides (Figure 2-5 and Figure 2-6). Drag the window over any of the guides to highlight the area where the window is to be placed on the desktop (Figure 2-6). The center guide has five options. There are two vertical positioning guides,

one on the left and one on the right of the Desktop and two horizontal positioning guides, one on the top and one on the bottom of the Desktop.

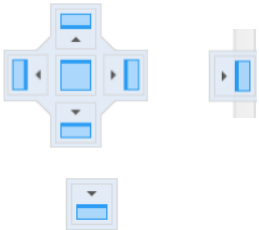

Figure 2-5: Examples of the positioning guides.

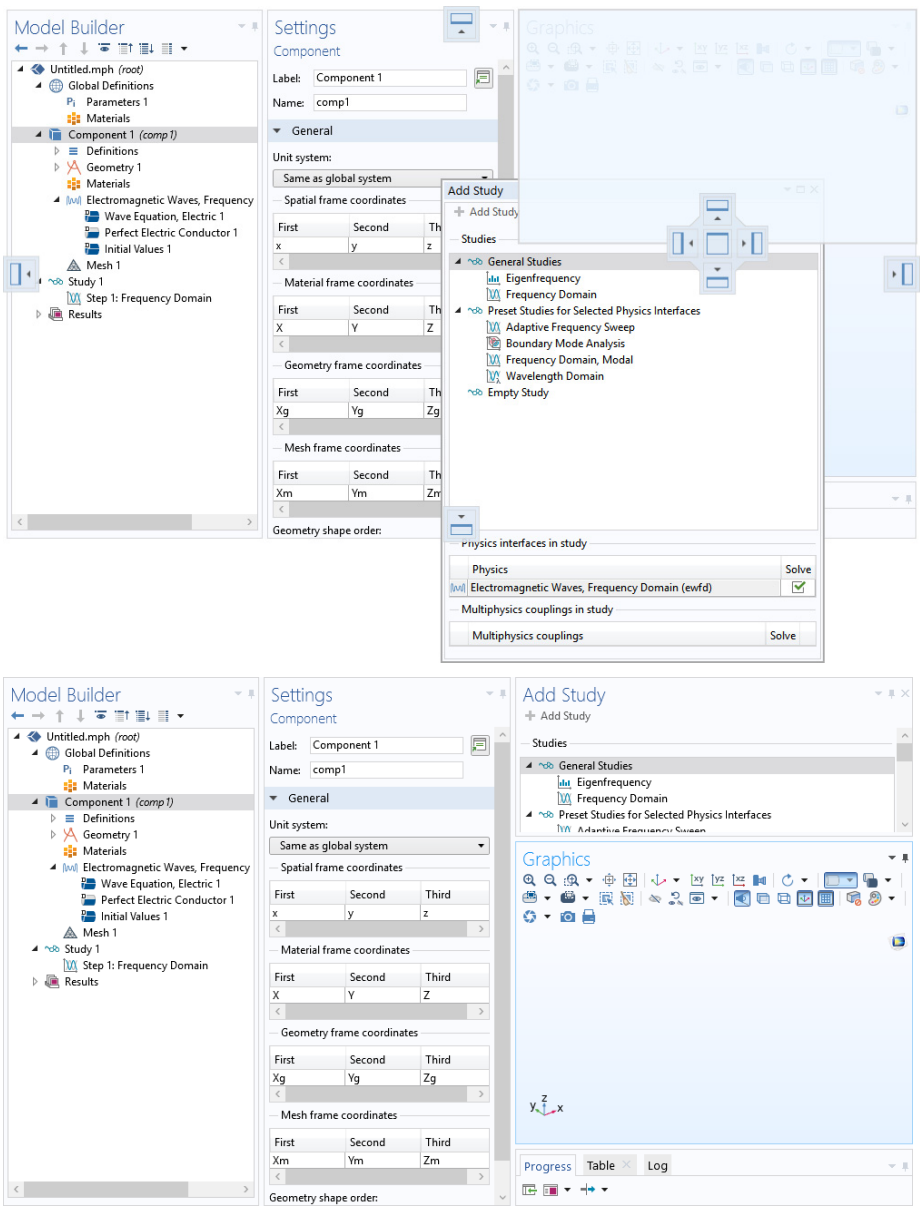

Figure 2-6: The positioning guides display (top image) when you click and hold the mouse pointer on a window. Drag the window over any of the guides to see the highlighted light blue area, which indicates the destination for the window. Release the mouse button and the window drops into place (bottom image).

RESIZABLE TABLES AND TEXT AREAS (WINDOWS USERS)

Some tables and text areas are resizable so that you can drag the area to extend it if it contains a lot of text. A border that you can drag to resize a table or text area is indicated by a thicker line:

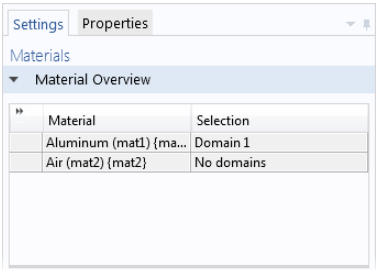

Figure 2-7: You can click and drag the thicker bottom border to resize the Material Overview table.

You can also click the **>>** button in the top-left corner to expand the table to show its contents. If you click at the border between two columns in a table, you can then drag to resize the column to the left of the border, or double-click to resize that column to fit its contents.

SELECTING, COPYING, AND PASTING IN TABLES

In tables of parameters or variables, for example, you can select a row by clicking in one of the cells, and you can select multiple rows by Shift-clicking to select a range of rows or Ctrl-clicking to select a deselect a single row. Pressing Ctrl+A when you are editing a cell selects all text in the cell. If you are not editing a cell, the pressing Ctrl+A select the entire table. You can right-click selected rows in a table and choose **Select All**.

You can also right-click to **Cut**, **Copy**, and **Paste** the selected table rows. Alternatively, you can use the corresponding keyboard shortcuts Ctrl+X, Ctrl+C, and Ctrl+V, respectively.

MOVING, MINIMIZING, AND MAXIMIZING WINDOWS (MACOS AND LINUX)

- Right-click the window tab and select **Move>View** (to move a separate window). Move the mouse to where you want the window to display and left-click to confirm the move.
- Right-click the window tab and select **Move>Tab Group** (to move several tabbed windows) from the list. Move the mouse to where you want to the group of windows to display and left-click to confirm the move.
- To resize a window, hover the mouse over the left, right, top, or bottom boundaries of the window until a double arrow displays. Drag the mouse to resize the window. Or right-click the window tab and select **Size>Left**, **Right**, **Top**, or **Bottom**. A blue line highlights the choice; drag to resize.
- To maximize and restore a window's original position, double-click a window tab to maximize it; double-click again to restore it.
- Click the **Minimize** or **Maximize** button in the top-right corner or right-click the window tab and select **Minimize** or **Maximize** from the list.

At any time, click the **Reset desktop** button in the main toolbar. The section Keyboard Shortcuts has additional shortcuts for all operating systems.

VERTICAL OR HORIZONTAL WINDOW ORIENTATION (MACOS AND LINUX)

After a window is minimized along the side of the COMSOL Desktop, you also have the option to change the window **Orientation** to **Vertical** (the default) or **Horizontal** when you click the window icon (see Figure 2-8).

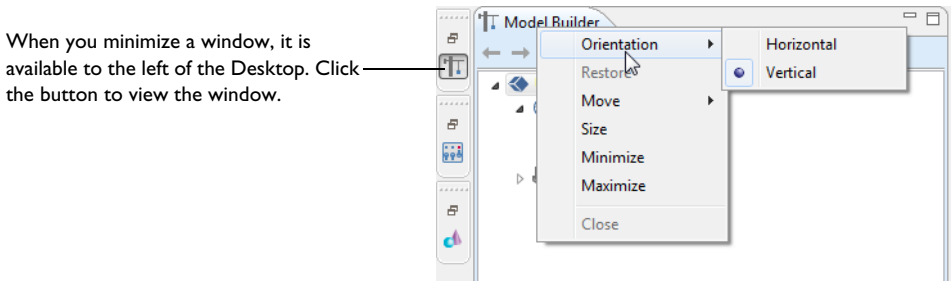

Figure 2-8: A minimized window is accessible to the left of the Desktop. Click the window icon to view it. You can then right-click the window to Move, Size, Minimize or Maximize the window. You can also change the Orientation of a minimized window to be Horizontal or Vertical when you click and view it on the Desktop in its minimized state.

- The COMSOL Desktop
- The Model Builder
- Creating a New Model

The COMSOL Desktop Windows

The COMSOL Desktop windows, including those shown in Figure 2-1, are integral to building your model. The windows listed in Table 2-1 are described throughout the documentation and the table includes links to this information. You can open windows that are currently not open in the COMSOL Desktop by choosing them from the **Windows** menu. The **Model Builder**, **Settings**, **Graphics**, and **Statistics** (for mesh statistics) windows cannot be closed and are therefore not available in the **Windows** menu.

TABLE 2-1: COMSOL DESKTOP WINDOWS

WINDOW NAME AND LINK	DESCRIPTION
BUILDING A MODEL	
The Model Wizard	Start building a model by choosing the Component space dimension, physics interfaces, and study.
The New window	Open the New window to begin modeling using the Model Wizard to start with a Blank Model. See Open a New Window to Begin Modeling.
The Model Builder	Control the modeling procedure using the model tree. This window has all the functionality and operations for building and solving models and displaying the results.
The Graphics Window	This window is a graphical view of the geometry, mesh, and results of the model. It also has useful tools to change the view and select multiple geometric entities, for example.
The Material Browser Window	Browse the material libraries and load materials into your models.
The Add Material Window	Add predefined materials.
Part Libraries	The Part Libraries contain collections of geometry parts, which serve as more advanced geometric primitives specially created for an application area.
The Add Physics Window	Add physics interfaces.
The Add Multiphysics Window	Add applicable multiphysics couplings.

TABLE 2-1: COMSOL DESKTOP WINDOWS

WINDOW NAME AND LINK	DESCRIPTION
The Settings and Properties windows	When a node is clicked in the Model Builder a corresponding Settings window opens with the same name as the node. It is a window with settings that define operations and properties specific to that node. The Properties window is accessed from the context menu and displays other node properties. See Settings and Properties Windows for Feature Nodes.
The Selection List Window	Choose objects, for example, while working with complex geometries and when you need to easily locate a geometric entity that is not easily viewed.
The Message window for geometry measurements	A tool used to measure geometry objects and entities. See Measuring Geometry Objects.
The Find Results window	Displays search results from searches performed using the Find tool. See Searching and Finding Text.
The Recovery Files window	Displays any existing recovery files and provides tools for opening, saving, and deleting recovery files. See Saving and Opening Recovery Files.
The Add-in Libraries Window	Add an available add-in in the Model Builder from the list of add-in in this window.
RESULTS AND ANALYSIS	
The Add Study Window	Add a study or studies to models.
The Plot Windows	Plot windows are also graphics windows. These plot windows display convergence results and monitor probe values while solving, for example.
The Table window	Displays the results from integral and variable evaluations defined in Derived Values nodes or by Probes and stored in Table nodes. It also displays results from nodes under an Evaluation Group node. See The Table Window and Tables Node.
The Messages Window	Contains information useful after an operation is performed.
The Progress Window	Displays the progress of the solver or mesher during the process, including a progress bar and progress information for each solver or mesher.
The Log Window	Contains information from previous solver runs, including convergence information, solution time, and memory use.
The Debug Log window	Contains debug information for model methods. See the Application Builder documentation for more information about debugging methods.
The External Process Window	Follow external processes (such as distributed batch jobs) that have been started. The window updates when you are attached to the external processes.
The Mesh Statistics Window	This window includes information about the minimum and average mesh element quality and a mesh element quality histogram, which shows the relative frequency of mesh elements with different quality values.
Comparing Models and Applications	This window includes the resulting differences from a comparison of models or applications.
APPLICATION EXAMPLES	
The Application Libraries Window	Displays all the models and applications included with an installation. The folders contain models and applications specific to the installed module.
The Application Library Update Window	A service that provides new and updated models and applications for each of the application libraries of the COMSOL products that your license includes.
HELP AND DOCUMENTATION	
The Help Window and Topic-Based Help	Provides access to context help in the COMSOL Desktop.

TABLE 2-1: COMSOL DESKTOP WINDOWS

WINDOW NAME AND LINK	DESCRIPTION
The Documentation Window	Navigate to PDF or HTML versions of the documentation (availability is based on your license), as well as Search, Bookmark, Print Topics, and Link with Contents.
The Root Settings and Properties Windows	The root node is the topmost level of the Model Builder tree. When you click this node, the root node's Settings window opens and includes detailed information about the model file.

- Creating a New Model
- The COMSOL Desktop
- COMSOL Documentation and Help
- Toolbars and Keyboard Shortcuts

The COMSOL Desktop Menus and Toolbars

The menus and toolbars available from the COMSOL Desktop vary slightly between operating systems. However, the variations are subtle and the overall functionality remains the same.

The sections Windows Toolbars and Menus and Cross Platform (macOS and Linux) Toolbars and Menus show examples of the main terms and locations of the toolbars and menus.

The Model Builder toolbar is the same for all platforms and is described in this section.

The Features Available on Toolbars and From Menus section details the available features and functions.

THE MODEL BUILDER TOOLBAR

The Model Builder toolbar is the same for all operating systems. It is located at the top of the window as shown in Figure 2-9. The actions listed in Table 2-2 are used to navigate the Model Builder tree.

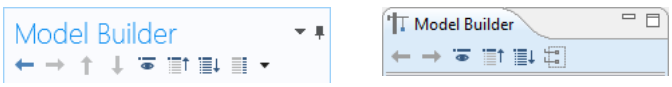

Figure 2-9: The Model Builder toolbar for Windows (left) and macOS and Linux (right).

- The COMSOL Desktop
- Creating a New Model
- The Toolbars and Keyboard Shortcuts section has detailed information about the contextual toolbars available on the COMSOL Desktop.

Windows Toolbars and Menus

The available ribbon toolbar options are dynamic, based on where in the model you are working and what is logically available for a specific task. When a blank model is created, only the default tabs are included (Model, Definitions, Study, and Results). The Physics, Geometry, and Mesh tabs are added once a model and physics interface are added to the Model Wizard, as shown in Figure 2-10.

The top of the COMSOL Desktop includes a customizable Quick Access Toolbar. Underneath this are ribbon tabs and ribbon groups, which together, are referred to as *toolbars*. The **Home** toolbar is a collection of frequently used features from all the other toolbars. For documentation purposes, a toolbar uses the same name as the tab. For

example, the **Home** toolbar, **Physics** toolbar, **Geometry** toolbar, or **Study** toolbar. See The Model Builder Toolbar and Features Available on Toolbars and From Menus for a detailed list of all the features available.

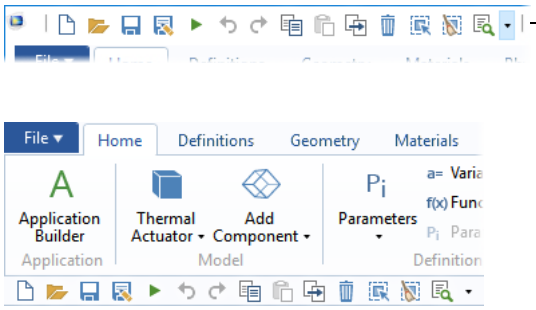

The Quick Access Toolbar displays above the ribbon by default. Click the small arrow at the end to customize the toolbar.

Figure 2-10: The Quick Access Toolbar can be positioned above or below the ribbons. You can also customize the toolbar to include or exclude a variety of buttons.

CUSTOMIZE THE QUICK ACCESS TOOLBAR

The Quick Access Toolbar has several default buttons that can be displayed above or below the ribbon. Click the small arrow at the end of the toolbar to open the **Customize the Quick Access Toolbar** list. You can either edit which of the default buttons display directly from the list, or click **More Commands** to **Add** and **Remove** (or double-click to add or remove) the buttons as detailed in the section Features Available on Toolbars and From Menus. This can also be done in The Preferences Dialog Box in the **Quick Access Toolbar** section.

KEYBOARD SHORTCUTS FOR THE QUICK ACCESS TOOLBAR

You can use numeric keyboard shortcuts for the buttons on the Quick Access Toolbar. To activate those keyboard shortcuts, press the Alt key. The keyboard shortcuts (1, 2, 3, and so on) then appear underneath the Quick Access Toolbar (see the following screenshot).

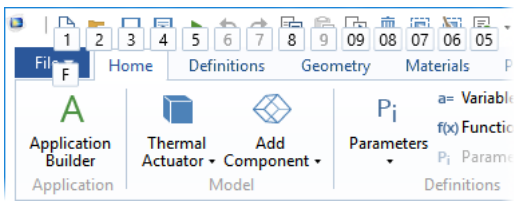

Figure 2-11: Pressing the Alt key displays the keyboard shortcuts for the Quick Access Toolbar.

DISPLAY THE QUICK ACCESS TOOLBAR ABOVE OR BELOW THE RIBBON

Right-click a ribbon to select **Show Quick Access Toolbar Above the Ribbon** or **Show Quick Access Toolbar Below the Ribbon**. These options are also available from the Customize Quick Access Toolbar menu. See Figure 2-10.

Select **Minimize the Ribbon**. To restore the ribbon, right-click anywhere in the top of the window and click **Minimize the Ribbon** to deactivate it (remove the check mark).

MINIMIZE (HIDE) THE RIBBON

Right-click anywhere on a ribbon and choose **Minimize the Ribbon** to hide the ribbon on the Desktop. To access the ribbon features, click the ribbon tab name (for example, **Model**, **Definitions**, or **Study**). The ribbon features are then available. To restore the ribbon to the top of the Desktop, right-click in the tab name area and click to remove the check mark next to **Minimize the Ribbon**.

Cross Platform (macOS and Linux) Toolbars and Menus

For cross-platform users (primarily macOS and Linux), the **Main Toolbar** is similar to the Quick Access Toolbar for Windows. In addition, there is a **Model Toolbar** and a variety of **Contextual Toolbars** available. These are a mixture of

drop-down menus and buttons for frequently used actions. For documentation purposes, a toolbar uses the same name as the contextual toolbar. For example, the **Physics** toolbar, **Geometry** toolbar, or **Study** toolbar. See The Model Builder Toolbar and Features Available on Toolbars and From Menus for a detailed list of all the features available.

The Contextual Toolbar changes when you click a **Definitions**, **Geometry**, **Mesh**, **Study**, or **Results** node in the **Model Builder**. The Model Toolbar and Contextual Toolbar are similar to the ribbon toolbars for a Windows operating system.

	You can also launch the cross-platform version on Windows using `comsolxpl.exe`.

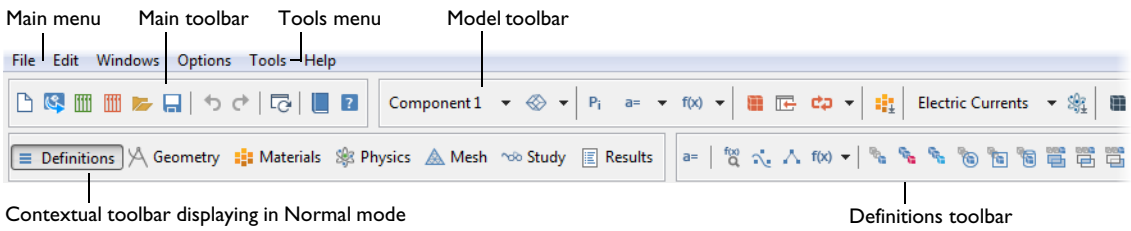

Figure 2-12: The menu and toolbar options for cross-platform users (usually macOS and Linux operating systems). Only part of the Model Toolbar and Contextual Toolbars are shown. When one of the buttons is clicked on this toolbar, the associated toolbar opens, in this example for the Definitions node. This toolbar also opens when the Definitions node is clicked in the Model Builder.

DISPLAY OR HIDE THE TOOLBARS FROM THE TOOLS MENU

From the **Tools** menu, you can choose to display or hide each toolbar. Select **Main Toolbar**, **Model Toolbar**, or **Contextual Toolbar** to turn that toolbar on or off in the COMSOL Desktop. For the **Toolbar Button Label**, you can also choose to **Show Icon Only** or **Show Icon and Text**. When **Show Icon and Text** is on it adjusts what is available on the toolbar as some buttons in the Model Toolbar display the text, while others have the label when you hover over the button. Finally, choose the **Toolbar Display Mode** as **Normal** or **Compact**. **Compact** compresses some buttons in the Contextual Toolbar and Model Toolbar under menus.

	If you are using a **Regular Screen Layout** and want to view all available buttons, the optimal settings are to set the **Toolbar Button Label** to **Show Icon Only** and the **Toolbar Display Mode** to **Compact**.

OTHER USEFUL FUNCTIONS AVAILABLE FROM THE WINDOWS MENU

From the **Windows** menu there are also other useful functions:

- Open a variety of useful windows. See The COMSOL Desktop Windows for a list and links to applicable sections.
- From the **Model Builder Node Label** submenu, choose a way to label the nodes in the Model Builder. See Displaying Node Names, Tags, and Types in the Model Builder.
- From the **Desktop Layout** submenu, choose a **Widescreen** or **Regular Screen** layout, or **Reset the Desktop**. See Customizing the Desktop Layout.

Features Available on Toolbars and From Menus

The features listed in Table 2-2 are often accessed from multiple locations. In general, the button or menu option is located as follows, with some minor differences between Windows and the cross-platform (macOS and Linux)

systems and as described in Windows Toolbars and Menus and Cross Platform (macOS and Linux) Toolbars and Menus.

- The **File** menu. See Figure 2-10 (Windows) and Figure 2-12 (macOS and Linux).
- The **Model Builder** toolbar. See Figure 2-9.
- The **Quick Access Toolbar** (Windows only; see Figure 2-10). Customize the toolbar to access some of the buttons listed in the table.
- **Main Menu** and a **Main Toolbar** (macOS and Linux, see Figure 2-12).
- Additional menus along the top of the Desktop: **Edit**, **Windows**, **Options**. **Tools**, and **Help** (macOS and Linux, see Figure 2-12).

TABLE 2-2: FEATURES AVAILABLE ON VARIOUS TOOLBARS AND FROM MENUS

ICON	NAME	DESCRIPTION OR LINK TO MORE INFORMATION
Creating Models		
	New (Ctrl+N)	Open the New window to begin modeling using the Model Wizard or start with a Blank Model. See Creating a New Model. For all users, this is available from the **File** menu. It is also available on the Quick Access Toolbar (Windows users) or the Main Toolbar (cross-platform users). Additional options are available when check boxes are enabled on the Preferences dialog box under Physics Builder.
	Blank Model	Start a new blank model without any settings. This command is available after choose **File>New**. It is also available on the Quick Access Toolbar (Windows users).
Working in the Application Builder		
	Application Builder (Ctrl+Shift+A)	Toggle between the Application Builder and COMSOL Multiphysics Model Builder windows. For Windows users this is available in the **Home** toolbar and the **Developer** toolbar.
	Data Access	Add data and properties that can be modified from a running application. For Windows users this is available in the **Developer** toolbar. See Data Access in the *Application Builder Reference Manual*.
	Record Method	Record changes to the embedded model to a new method. For Windows users this is available in the **Developer** toolbar. See Recording Code in the *Application Builder Reference Manual*.
	Test Application (Ctrl+F8)	Launch the application in a separate window. For Windows users this is available in the **Developer** toolbar and on the Quick Access Toolbar. See Testing the Application in the *Application Builder Reference Manual*.
	Run Application	Run an application as a standalone application using a custom user interface. For all users, this is available from the **File** menu. It is also available on the Quick Access Toolbar (Windows users).
	Compiler	Compile an application to run separately from COMSOL Multiphysics or COMSOL Server as a standalone executable application. Requires a license for COMSOL Compiler.
Opening and Saving Files		
	Open (Ctrl+O)	Open an existing file located on the computer. For all users, this is available from the **File** menu. It is also available on the Quick Access Toolbar (Windows users) or the Main Toolbar (cross-platform users).

TABLE 2-2: FEATURES AVAILABLE ON VARIOUS TOOLBARS AND FROM MENUS

ICON	NAME	DESCRIPTION OR LINK TO MORE INFORMATION
	Recent files	From the **File** menu, select a recent file to open. For Windows users, the file is selected from the **Recent** submenu. For cross-platform users, the most recent files are listed at the bottom of the list. Windows users can also customize the Quick Access Toolbar to access this button.
	Find	Displays search results from searches performed using the Find tool. Press Ctrl+F. Windows users can also customize the Quick Access Toolbar to access this button. See Searching and Finding Text.
	Application Libraries	Open The Application Libraries Window. For Windows users, this is available in the **Home** toolbar's **Windows** menu or from the **File** menu. You can also customize the Quick Access Toolbar and then click the button. For cross-platform users, this is available from the **File** menu.
	Open Recovery File	COMSOL Multiphysics can store recovery files each time you start a solver. This is a preference setting that is initially active by default. For all users, this is available from the **File** menu. It is also available on a customized Quick Access Toolbar (Windows users). See Saving and Opening Recovery Files.
	Save (Ctrl+S)	Save the current file. For all users, this is available from the **File** menu. It is also available on the Quick Access Toolbar (Windows users) or the Main Toolbar (cross-platform users). See Saving COMSOL Files.
	Save As	Choose to save in one of the COMSOL file formats. The **Save As** window opens, and from the **Save as type** list select: **COMSOL Application (*.mph)** (the default), **Model file for Java (*.java)**, **Model file for MATLAB (*.m)**, or **Model File for Visual Basic (*.vba)**. For all users, this is available from the **File** menu. It is also available on the Quick Access Toolbar (Windows users). See About the COMSOL Model File Formats.
	Revert to Saved	Opens the last saved version of the file and reinitializes the GUI. For all users, this is available from the **File** menu. It is also available on a customized Quick Access Toolbar (Windows users) or the Main Toolbar (cross-platform users). See Reverting to the Last Saved File.
	Compact History	The files for Java and for MATLAB contain the entire model history, including settings that are no longer part of the model or application. For all users, this is available from the **File** menu. It is also available on a customized Quick Access Toolbar (Windows users). See Compacting the History.
	Run Application	Run an application created using the Application Builder. For all users, this is available from the **File** menu. It is also available on the Quick Access Toolbar (Windows users) or the Main Toolbar (cross-platform users).
COMSOL Multiphysics Server		
	Connect to Server	To connect to a server from the COMSOL Desktop. For all users, this is available from the **File>COMSOL Multiphysics Server** menu. It is also available on a customized Quick Access Toolbar (Windows users). See Connecting to a COMSOL Multiphysics Server.
	Disconnect from Server	To close the connection to the server or MATLAB. For all users, this is available from the **File>COMSOL Multiphysics Server** menu. It is also available on a customized Quick Access Toolbar (Windows users). See Disconnecting from a COMSOL Multiphysics Server.

TABLE 2-2: FEATURES AVAILABLE ON VARIOUS TOOLBARS AND FROM MENUS

ICON	NAME	DESCRIPTION OR LINK TO MORE INFORMATION
	Import Application from Server	To import a particular application when working with MATLAB, Excel, or the COMSOL API. For all users, this is available from the **File>COMSOL Multiphysics Server** menu. It is also available on a customized Quick Access Toolbar (Windows users). See Working with MATLAB, Excel, or the COMSOL API.
	Remove Applications from Server	To delete applications (remove them from the server) that you have created using `ModelUtil`. For all users, this is available from the **File>COMSOL Multiphysics Server** menu. It is also available on a customized Quick Access Toolbar (Windows users). See Working with MATLAB, Excel, or the COMSOL API.
Model Builder Toolbar		
	Previous Node (Alt+Left) Next Node (Alt+Right)	Navigate back to the node previously selected or to the next node in the sequence. See also Keyboard Shortcuts.
	Show More Options	Click to select options to display from the **Show More Options** dialog box. See Showing More Options.
	Collapse All Expand All	Click to collapse or expand all nodes in the model tree, except the top nodes on the main branch.
	Model Builder Node Label	Choose to display any combination of Name, Tag, or Type. See Displaying Node Names, Tags, and Types in the Model Builder and Settings and Properties Windows for Feature Nodes.
Undo, Redo, Copy, Paste, Duplicate, and Delete		
	Undo (Ctrl+Z) Redo (Ctrl+Y)	Undo and Redo the last operation for some operations (such as adding, disabling, moving, and deleting nodes in the Model Builder) as well as changing values in the Settings window. For Windows users, this is available on the Quick Access Toolbar. For cross-platform users, this is available in the Main Toolbar or from the **Edit** menu. See Undoing and Redoing Operations.
	Copy	Copy, paste, and duplicate some features. Also right-click a node to select one of these options from the context menu. For Windows users, this is available on the Quick Access Toolbar. For cross-platform users, this is available in the Main Toolbar or from the **Edit** menu. See Copying, Pasting, and Duplicating Nodes.
	Paste	
	Duplicate	
	Delete (Del)	Delete some nodes while building a model, or delete a selected geometry object. Also press the Del key or right-click a node to select this option from the context menu. For Windows users, this is available on the Quick Access Toolbar. For cross-platform users, this is available in the Main Toolbar or from the **Edit** menu. See Clearing Sequences and Deleting Sequences or Nodes.

TABLE 2-2: FEATURES AVAILABLE ON VARIOUS TOOLBARS AND FROM MENUS

ICON	NAME	DESCRIPTION OR LINK TO MORE INFORMATION
	Select All	To select all or clear the selection of all geometric entities in the Graphics window, click the **Select All** or **Clear Selection** buttons, respectively.
	Clear Selection	For Windows users, this is available on the Quick Access Toolbar. For cross-platform users, this is available from the **Edit** menu. See Selecting and Clearing Selection of Geometric Entities.
Other		
	Reset Desktop	Set the COMSOL Desktop back to widescreen or regular screen, or reset it to default settings. For Windows users, this is available in the **Home** toolbar, in the **Layout** menu. You can also customize the Quick Access Toolbar and then click the button. For cross-platform users, this is available in the Main Toolbar or from the **Windows>Desktop Layout** menu. See Customizing the Desktop Layout.
	Licensed and Used Products	Open the Licensed and Used Products window to list or block the products your license includes. See Checking and Controlling Products and Licenses Used. For Windows users, this is available from the **File** menu. You can also customize the Quick Access Toolbar and then click the button. For cross-platform users, this is available from the **Options** menu.
	Preferences	To make changes to how items are displayed or available throughout the COMSOL Multiphysics software. See Preferences Settings. For Windows users, this is available from the **File** menu. You can also customize the Quick Access Toolbar and then click the button. For cross-platform users, this is available from the **Options** menu.
	Measure	Measure geometric properties such as volumes (see Measuring Geometry Objects). Available in the **Geometry** toolbar. Also, for Windows users, you can customize the Quick Access Toolbar and then click the button.
	Group (Ctrl+G)	Group related and similar nodes under a Group node. Available in several parts of the model tree (see Custom Grouping of Nodes). Also, for Windows users, you can customize the Quick Access Toolbar and then click the button.
	Ungroup (Ctrl+Shift+G)	Ungroup nodes that are grouped under a **Group** node. Available in several parts of the model tree (see Custom Grouping of Nodes). Also, for Windows users, you can customize the Quick Access Toolbar and then click the button.
Help and Documentation		
	Help (F1)	Open the context help. See COMSOL Documentation and Help. For Windows users, this is available from the **File>Help** menu or in the upper-right corner of the Desktop. For cross-platform users, this is available in the Main Toolbar or from the **Help** menu.
	Documentation (Ctrl+F1)	Open the Documentation. For Windows users, this is available from the **File>Help** menu. For cross-platform users, this is available in the Main Toolbar or from the **Help** menu. See COMSOL Documentation and Help.
	Application Gallery	Go to the online Application Gallery on the COMSOL website. For Windows users, this is available from the **File>Help** menu. For cross-platform users, this is available from the **Help** menu.

TABLE 2-2: FEATURES AVAILABLE ON VARIOUS TOOLBARS AND FROM MENUS

ICON	NAME	DESCRIPTION OR LINK TO MORE INFORMATION
	Support Center	Go to the online Support Center on the COMSOL website. For Windows users, this is available from the **File>Help** menu. For cross-platform users, this is available from the **Help** menu.
	Training	Go to the Training page on the COMSOL website. For Windows users, this is available from the **File>Help** menu. For cross-platform users, this is available from the **Help** menu.
	Check for Product Updates	For Windows users, this is available from the **File>Help** menu. For cross-platform users, this is available from the **Help** menu. See Checking for Product Software Updates.
	Update COMSOL Application Libraries	For Windows users, this is available from the **File>Help** menu. For cross-platform users, this is available from the **Help** menu. See The Application Library Update Window
	Update COMSOL Part Libraries	For Windows users, this is available from the **File>Help** menu. For cross-platform users, this is available from the **Help** menu. See The Part Library Update Window
	About COMSOL Multiphysics	For Windows users, this is available from the **File>Help** menu. For cross-platform users, this is available from the **Help** menu. See The About COMSOL Multiphysics Box.

The Messages Window

The **Messages** window ( ) displays by default and contains information useful to you after an operation is performed.

The information in this window includes:

- Details about opening and saving model files such as MPH-files.
- Information about geometry objects imported from CAD files.
- On the **Mesh** and **Geometry** toolbars, click the **Measure** ( ) button to view information about:
  - The geometry finalization (forming a union or an assembly) and about the number of geometric entities (domains, boundaries, and so on) in the finalized geometry.
  - The number of mesh elements and degrees of freedom in the model.
- Solution times.
- Error messages. The messages are in chronological order and can be scrolled through.

By default, the messages are preceded by a timestamp, providing the current date and time for the message. To turn off the timestamps, open the **Preferences** dialog box and clear the **Add timestamps to messages** check box on the **General** page under **Log and messages**.

To open the **Messages** window:

- From the **Home** toolbar (Windows users) select **Windows>Messages**.

- From the main menu (macOS and Linux users) select **Windows>Messages**.
- To clear the window of all messages, click the **Clear** button ( ).

	• Meshing • Geometry Modeling and CAD Tools • Studies and Solvers

About the COMSOL Model File Formats

Below find a list of the COMSOL file formats: MPH-files for applications and models, model files for Java, model files for MATLAB, and model files for VBA.

THE ROOT NODE

When you first open or create a new model, the *root node* ( ) is the topmost level of the tree. By default, unnamed files are called `Untitled.mph`. The filename changes when the file is saved for the first time, but the root node *Name* does not change for this top level node. See The Root Settings and Properties Windows for details about the settings available when this node is clicked.

COMSOL MPH-FILES

The default standard file format with the extension `.mph`. The files contain binary and text data. The mesh and solution data are stored as binary data, while all other information is stored as plain text.

You can quickly save and load MPH-files. All models and applications in the COMSOL Application Libraries in the modules are saved as MPH-files.

The MPH-files in the COMSOL Application Libraries can have two formats:

- *Solved MPH-files* include all meshes and solutions. In the **Application Libraries** window these files appear with the icon . If the MPH-file's size exceeds 25MB, a tooltip with the text "Large file" and the file size appears when you position the cursor at the node in the **Application Libraries** tree.
- *Compact MPH-files* include all settings but have no built meshes and solution data to save space (a few compact MPH-files have no solutions for other reasons). You can open these to study the settings and to mesh and re-solve it. It is also possible to download the full versions — with meshes and solutions — of most of these through Application Library Update (see The Application Library Update Window). In the **Application Libraries** window these appear with the icon . If you position the cursor at a compact file in the Application Libraries window, a **No solutions stored** message appears. If a full MPH-file is available for download, the corresponding node's context menu includes a **Download File With Solution** icon ( ).

File Locking

Only one user can open and edit an MPH-file at the same time. If you try to open an MPH-file that is already open in another user's COMSOL Desktop, that MPH-file is locked, and you get an option to open the MPH-file in a read-only mode (click **Open As Read-Only**). That means that you can edit the model but you cannot save it unless you save the MPH-file under another name. When an MPH-file is locked, COMSOL creates a separate lock file with the same filename as the MPH-file plus the extension `.lock`, stored in the same directory as the locked MPH-file. If a lock file remains after all COMSOL Desktop sessions have ended (which can happen if the

COMSOL Desktop session is ended in a nonstandard way), you can reset the lock when trying to open the file the next time by clicking **Reset Lock and Open**.

	Linux and macOS do not support operating system locking of files. On those platforms, locking is supported to help users avoid editing the same COMSOL Multiphysics model file, but it is possible to ignore the file locking and delete the lock files.

MODEL FILES FOR JAVA

Editable script files that contain sequences of COMSOL commands as Java code (see the *COMSOL Multiphysics Programming Reference Manual* for more information about these commands). You can compile these Java files and run them as separate applications. Edit the files in a text editor to add additional commands. For parts of the model that appears under a component (such as the geometry, physics, and mesh), the default format is to include the component level in the Java code. If you want do not want to include the component level, clear the Use component syntax check box on the **Methods** page in the **Preferences** dialog box.

	When saving a Model Java-file history for running a method call in the COMSOL Desktop, it contains the history produced while running the method call and not the method itself.

MODEL FILES FOR MATLAB

Model files for MATLAB are editable script files (M-files), similar to the model files for Java, for use with MATLAB. A model file for MATLAB contains a sequence of COMSOL commands as an M-file. You can run these model files in MATLAB like any other M-file scripts. You can also edit the files in a text editor to include additional COMSOL commands or general MATLAB commands.

	Running model files in the M-file format requires LiveLink™ *for* MATLAB®.

MODEL FILES FOR VBA

Model files for VBA are editable script files (VBA-files), similar to the model files for Java, for use with VBA (Visual Basic for Applications) in Microsoft Excel®. A model file for VBA contains a sequence of COMSOL commands as a VBA-file (extension .vba). You can use these files from Excel® to access settings and data in COMSOL models.

	Using model files in the VBA format requires LiveLink™ *for* Excel®.

	• The Application Libraries Window • Saving COMSOL Files • Reverting to the Last Saved File • Printing and Capturing Screenshots • Saving and Opening Recovery Files

Saving COMSOL Files

The following options are selected from different menus and toolbars as described in The COMSOL Desktop Menus and Toolbars.

SAVING A NEW MODEL OR APPLICATION

If this is the first time saving a model or application, or if you want to update the file and keep the current name and format, in general, these are the ways to save a model:

- Click the **Save** button ( ) on the Quick Access Toolbar or Main Toolbar.
- Press Ctrl+S.
- Select **File>Save**.

	If you save a model that was previously saved in an earlier version of COMSOL Multiphysics, you get a question about if you want to continue to save the model file, thereby overwriting the original file with a new file that has been converted so that it can only be opened in version 5.4. Select the **Do not show this message again** check box if desired. There is also a preference setting on the **Files** page in the **Preferences** dialog box. Under **Saving COMSOL application files**, clear the **Warn before overwriting a file saved by an older version of COMSOL** check box (selected by default) to turn off this question.

CREATING A COPY USING SAVE AS

If the model has been saved before and you want to create a copy you can choose to save in one of the COMSOL file formats (see COMSOL MPH-Files, Model Files for Java, and Model Files for MATLAB).

Select **File>Save As**. The **Save As** window opens, and from the **Save as type** list select **COMSOL Application (*.mph)** (the default), **Model file for Java (*.java)**, **Model file for MATLAB (*.m)**, or **COMSOL File for VBA (*.vba)**.

In all cases, navigate to the location where you want to save the model, enter a **File name**, and then click **Save**.

	You can add the author to the header of model files for Java and for MATLAB that are saved. Open The Preferences Dialog Box and under **General>History export**, select the **Include author** check box.

REVERTING TO THE LAST SAVED FILE

To open the last saved version of the file and reinitialize the GUI, select **File>Revert to Saved** ( ). For Windows users, you can also customize the Quick Access Toolbar and then click the **Revert to Saved** button.

COMPACTING THE HISTORY

The COMSOL files for Java and for MATLAB contain the entire history of the model, including settings that are no longer part of it. To compact the history so that the files only include the settings that are part of the current model, select **File>Compact History**. For Windows users, you can also customize the Quick Access Toolbar and then click the **Compact History** ( ) button.

	Compacting the history works best if you make sure that the geometry is built before running **File>Compact History**.

WHEN SAVING, OPTIMIZING FOR SPEED OR FILE SIZE

You can choose to save COMSOL files (MPH-files) that are optimized for speed (the default, using uncompressed files that are faster to save) or optimized for file size (using compressed files). In the **Preferences** dialog box (see

Preferences Settings), click **Files** and choose **Speed** or **File size** from the **Optimize for** list under **Saving COMSOL application files**.

	• About the COMSOL Model File Formats • Windows Toolbars and Menus • The Root Settings and Properties Windows • Printing and Capturing Screenshots

Saving and Opening Recovery Files

The COMSOL Multiphysics software can store recovery files each time you start a solver. This setting is initially active by default. If the server has lost contact with the client, a recovery file is also saved or kept.

If any recovery files exist, the **Recovery Files** window is open when you start the COMSOL Desktop. You can also open the **Recovery Files** window from the **Windows** menu.

The update of the recovery file occurs at the following events:

- After completing the solution for each time step specified as the output times in the **Times** field for a time-dependent simulation.
- After completing each parameter step in a parametric simulation.
- After completing each successful Newton iteration for a nonlinear stationary simulation.

The recovery files are COMSOL MPH-files that represent the state at the time that they were saved. They make it possible to recover from a solver error, which can be especially useful for long time-dependent or parametric runs.

You can control the use of recovery files using the buttons at the top of the Recovery Files window:

- Click the **Open** button ( ) to open a selected recovery file. Opening the recovery files this way ensures that the recovery file can be deleted without compromising the open model. It does not remove the recovery file when the open model is saved though
- Click the **Save and Open** ( ) button saves the recovery file to a Model MPH-file and open it. It also removes the recovery file.
- Click the **Save As** button ( ) to save the recovery file to a Model MPH-file and remove the recovery file.
- Click the **Delete** button ( ) or press Delete to remove the selected recovery files.

The COMSOL Multiphysics software keeps track of the computed time steps or parameter steps in the recovery file, so right-click the **Study** node and select **Continue** ( ) to continue the computation from the point where it was stored in the recovery file. If you are solving a stationary nonparametric problem, the last converged Newton iteration is stored in the recovery file; selecting **Continue** causes the software to resume solving from this stored state.

You can make changes to these default settings in The Preferences Dialog Box in the **Files** section.

- The **Save recovery file** check box is selected by default to save recovery files to disk during the solution process for time-dependent, parametric, and nonlinear solvers.
- The **Check for recovery files at launch** check box is selected by default so that the **Recovery Files** window opens at launch when there are any recovery files.
- In the **Folder for recovery files** field, you can specify a different folder from the default to, for example, use a folder on the server where there is more disk space for storing large recovery files. Click **Browse** to browse to a recovery file folder.

- In the **Folder for temporary files** field you can specify a different folder than the default to, for example, use a folder where there is more disk space for storing large temporary files. Click **Browse** to browse to a folder for temporary files.
- If you run the COMSOL Multiphysics software in a client-server configuration, you can specify a **Folder for temporary files on client** and a **Folder for temporary files on server**.

	Studies and Solvers

The Root Settings and Properties Windows

The root node is the topmost level of the Model Builder tree and the Explorer tree in the Application Builder. When you click this node, the **Settings** window for the **root** node (, or in the Application Builder) opens and includes detailed information about the model file. To open the corresponding **Properties** window, right-click the **root** node and choose **Properties** from the context menu.

ROOT SETTINGS WINDOW

Some of the fields can be edited directly in this window, while others display system information that cannot be changed, or information that changes as updates are made throughout the model (for example, adding a node that requires an additional module license).

- **Protection**: Click **Set Password** next to **Editing not protected** or **Running not protected** to enter a password in the **Protect Edit with Password** or **Protect Running with Password** dialog boxes. To change the password, click Change Password to enter the previous password and a new password in the **Protect Edit with Password** or **Protect Running with Password** dialog boxes. Note that, for the password that protects editing, lost passwords cannot be recovered.
- **Used Products**: The information included here is based on the purchased license or modules. See Checking and Controlling Products and Licenses Used. Also see The About COMSOL Multiphysics Box.
- **Presentation**: In this section you can specify a title and a description of the model. By default, these texts are used on the title page of a report; see The Title Page. Under **Computation time**, you can enter an expected computation time in the **Expected** field. Also, the time after **Last** is the last measured computation time (if available). To illustrate the model you can also set an image as a thumbnail that displays in this section, when opening a file in the **Application Libraries** window, and as the default report title page image. See the section Setting and Clearing the Thumbnail Image for details about how to do this.
- **Unit System**: The default unit system is SI units. Or select any other option from the list. See Unit Systems and Setting the Unit System for Models to change the setting globally or locally.
- **Graphics**: For specifying the color theme used for selection colors, use the **Color theme** list, where you can select from all available color themes. The default is to use the default color theme — for example, **Default from preferences (Default)**. You specify the default color theme in the **Preferences** dialog box, in the **Color theme** list on the **Graphics and Plot Windows** page. See Selection Colors for more information about selection colors.

  For the **Font** settings, the default is to use the font family that is set in the **Preferences** dialog box — on the **Graphics and Plot Windows** page under **Default font** — with a default font size. Depending on the operating system and the installed fonts on the computer, you can select from a number of other font families from the **Family** list. The default font is indicated in the default settings for **Family** (**Default from preferences (Vera)**, for example). For the font size, the **Default size** setting in the **Size** list uses the font size that is used in the graphics and plots, which is a system-dependent value. You can also choose another font size between 6 and 24 points or type a font size in the **Size** combined field and list. The font and the font size affect text in the Graphics window and other plot

windows in the COMSOL Desktop and in Graphics form objects in the Application Builder. See Changing the Font for Plot Labels and Titles to make global changes.

- **Applications** (this section is only available from the Application Builder window): Select the **Ask to save application when closing** check box to ask users if they want to save changes in an application when closing it. Also, from the **When starting with COMSOL Multiphysics** list, you can control the behavior when a user starts COMSOL Multiphysics with the option to open an application or when a user double-clicks an MPH-file in Windows: Select **Edit application** (the default) to open the COMSOL Desktop for editing the application, or select **Run application** to launch and run the application directly.

  Select the **Ignore license errors during launch** check box to make it possible to start the application even if not all required licenses are available. It is, however, still not possible to use products when the license is not available, so available API methods will typically have to be used in the application to limit the application's functionality depending on what licenses are available.

ROOT PROPERTIES WINDOW

To access the **Properties** window, right-click the **root** node and choose **Properties** from the context menu.

	You can change a filename by saving the file, but the root node *Name* (`root`) cannot be changed for this top level node. This is different than for other nodes in the tree, where the name can be edited. See Displaying Node Names, Tags, and Types in the Model Builder for information. Also see Settings and Properties Windows for Feature Nodes.

- **File**: The file location where a file is saved. This field cannot be edited, but is automatically updated when the file is saved to a new path. Also see Documentation and Application Libraries Root Directories.
- **Version**: Includes the version and build of the COMSOL Multiphysics instance that you are running. This information is system generated.
- **Created** and **Last modified**: These sections cannot be edited and are automatically generated based on the computer system or network time and date settings.
- **Saved with license**: The license number of the installed software that the model or application was saved with is included here. Also see The About COMSOL Multiphysics Box.
- **Application version**: Enter a tracking version number for the model or application (for example, `Internal Draft V1`, `Sales Demonstration V2`, or `Version B`).
- **Search path**: Enter a file path to set a search path for external files. This path corresponds to `model.modelPath(<path>)` in the COMSOL Multiphysics API.

Unit Systems

The COMSOL Multiphysics software supports the following unit systems:

METRIC UNIT SYSTEMS

- SI units, the International System of Units (SI, Système International d'Unités). This is the default unit system (sometimes also called MKS). For a list of SI units in COMSOL Multiphysics, see SI Base, Derived, and Other Units.
- CGSA units. The CGS system uses centimeter, gram, and second as basic units of length, mass, and time, respectively. The remaining basic units are identical to the SI units. The CGS unit system gives nice values for small lengths, masses, forces, pressures, and energies when working on a microscale and with weak electromagnetic forces. The derived units of force, pressure, and energy have well-known and widely used names:

dyne, barye, and erg, respectively. CGSA adds *ampere* as the basic unit for electric current. For a list of CGSA units, see Special CGSA Units.

- Electromagnetic units (EMU). This system is based on Ampère's law, which defines the unit of electric current once you select an appropriate value for the constant C. When dealing exclusively with magnetic effects, it is convenient to set $C = 1$. If CGS units are used for the remaining basic dimensions, the current unit is called an *abampere*, and the corresponding coherent unit system is called electromagnetic units. Unique names for derived units have been introduced by prefixing the SI name with *ab-*. For a list of EMU units, see Special EMU Units.
- Electrostatic units (ESU). Based on Coulomb's law for the force between point charges, ESU uses a unit of charge called the *statcoulomb* with CGS units for length, mass, and time. From there, the *statampere*, or *franklin*, and other derived units of the electrostatic unit system follow. For a list of ESU units, see Special ESU Units.
- MPa units. For stationary structural mechanics, where the density does not appear in the equations, it can be convenient to use a system where newton and megapascal (hence the name "MPa system") are naturally derived units of force and pressure, respectively. Keeping the SI unit for time, the basic units of length and mass become millimeter and tonne. Except for the force and pressure units, other derived units are nameless. For a list of MPa units, see Special MPa Units.

ENGLISH UNIT SYSTEMS

- Foot-pound-second unit system (FPS units). The original foot-pound-second system seems to be the absolute system using the pound as a unit of mass. This version of the FPS system is in agreement with the IEEE standard (the pound is a unit of mass and not of force). The natural derived unit of force is the *poundal*. For a list of FPS units, see Special FPS Units.
- British engineering units. An alternative to the standard FPS system is the British engineering unit system (also called gravitational foot-pound-second system or foot-slug-second system). Here, the pound force is the natural unit of force, which causes the introduction of the mass unit *slug* such that a pound force is a slug-foot per second squared. For a list of British engineering units, see Special British Engineering Units.
- Inch-pound-second unit system (IPS units). It is possible to define varieties of the FPS and British engineering systems based on the inch instead of the foot as basic unit of length. This gives rise to two distinct inch-pound-second systems: the *absolute IPS system* (just called IPS) and the *gravitational IPS system*. For a list of IPS units, see Special IPS Units.
- Gravitational IPS units. This alternative IPS unit system considers the pound a unit of weight rather than a unit of mass. For a list of Gravitational IPS units, see Special Gravitational IPS Units.

OTHER

- None. No units appear in the settings, which can be useful in nondimensionalized (de-dimensionalized or dimensionless) models.

	• Using Units • Setting the Unit System for Models

Searching and Finding Text

Press Ctrl+F to open a **Find** tool that you can use to search for variables or text in all of the model or, for application development, only in methods. In the **Find** tool, click **All** to search the entire model, including user interface components, variable definitions, model entity tags, identifiers, and labels. You can specify to search using an **Exact match**, a **Regular expression**, or a **Case sensitive** search by selecting the corresponding check boxes. Windows users can also customize the Quick Access Toolbar to access this button ( ).

Click **Methods** to find and optionally replace a text string in methods developed for an application. See the Application Builder documentation for details.

Click **Advanced** to access some advanced search tools. See Advanced Search Options below.

Click the **Find** button to launch the search. The search results for each search appears in a separate **Find Results** window, where each occurrence of the search string appears in a row. Double-click the row to open the node or method and highlight the search result in the Settings window or method where it occurs. The **Node** column lists the node where the search string appears; the **Type** column lists the type of the search results, such as **Setting**, **Description**, or **Method**); and the **Text** column shows the text in which the search string appears.

ADVANCED SEARCH OPTIONS

Click **Advanced** to enable a more specific search method where individual types of candidates can be searched for. In the **Find** field, type a search query in the same way as on the **All** page using an **Exact match**, a **Regular expression**, or a **Case sensitive** search, if desired. In the **Filter** section, below the **Find** field, use the **Include** list to specify what to include: **Node tags**, **Node labels**, **Node names**, **Node types**, **Descriptions**, and **Settings**. The **Include** list specifies what you search for, so selecting **Node tags**, for example, only matches the query in the **Find** field against node tags. The option **Descriptions** searches for any fixed text in the COMSOL Desktop but not text that can be changed such as lists. The **Settings** option searches for values of a setting (for example, text in a text field or in a list). In addition, it is possible to add a name query in the **Name filter** field. Any nonempty entry here will only include settings with a specific name, which is the description of the setting. This query is also affected by the settings for the **Exact match**, **Regular expression**, and **Case sensitive** check boxes. Select the **Include API names in search** check box to allow the search filter to match against the API names. It is only applicable when searching for **Node types** and **Settings** and checks the API names of the following search candidates:

- The query in the **Name filter** field is matched against the API name of a setting (for example, the **Axis type** list in a **Block** geometry feature has `axistype` as its API name).
- The query in the **Find** field is matched against the API value of list settings (for example, the option **x-axis** in the **Axis type** list has the API value `x`).
- A search for the value of a check box (typically `on` or `off`) is ignored in normal searches but is active when including API names. The **Find** field can then match values that are on or off for most check boxes.
- For the **Node types** option in the **Include** list, which otherwise searches for the descriptive string of the type but also includes the API name of the type (for example, the **Work Plane** geometry feature has the API type `WorkPlane`).

ADDITIONAL SEARCH TOOLS FOR THE PHYSICS BUILDER

When searching in the Physics Builder, you can also control the scope of the search in the **Find** tool. In addition to physics builder files, it can also search in linked files. A linked file can either be a file in an **Import** node under the **External Resources** branch (downward search), or a file listed in the **External Resources** links in the table of the root node's Setting window (upward search). The search can look for files in the upward direction by selecting the **Follow link sources** check box, and it can look for files in the downward direction by selecting the **Follow imports** check box. A **Depth** value can be used to limit the search. Under the **Links** tab there is a specialized search that finds links to a selected node. It supports the **Follow link sources** option, and only need to search upward one level. It is not applicable for nodes that cannot be a target of a link.

The Application Libraries Window

The **Application Libraries** window (Figure 2-13) contains models and applications that you can use for a variety of purposes: for learning how to build COMSOL models, as starting points for your own models and applications, and as demonstrations of specific functionality. Each add-on module includes its own application library with information about how to use the module within its application areas. Each file includes full documentation and a brief description, including the solution times and information about the computer used for solving the model.

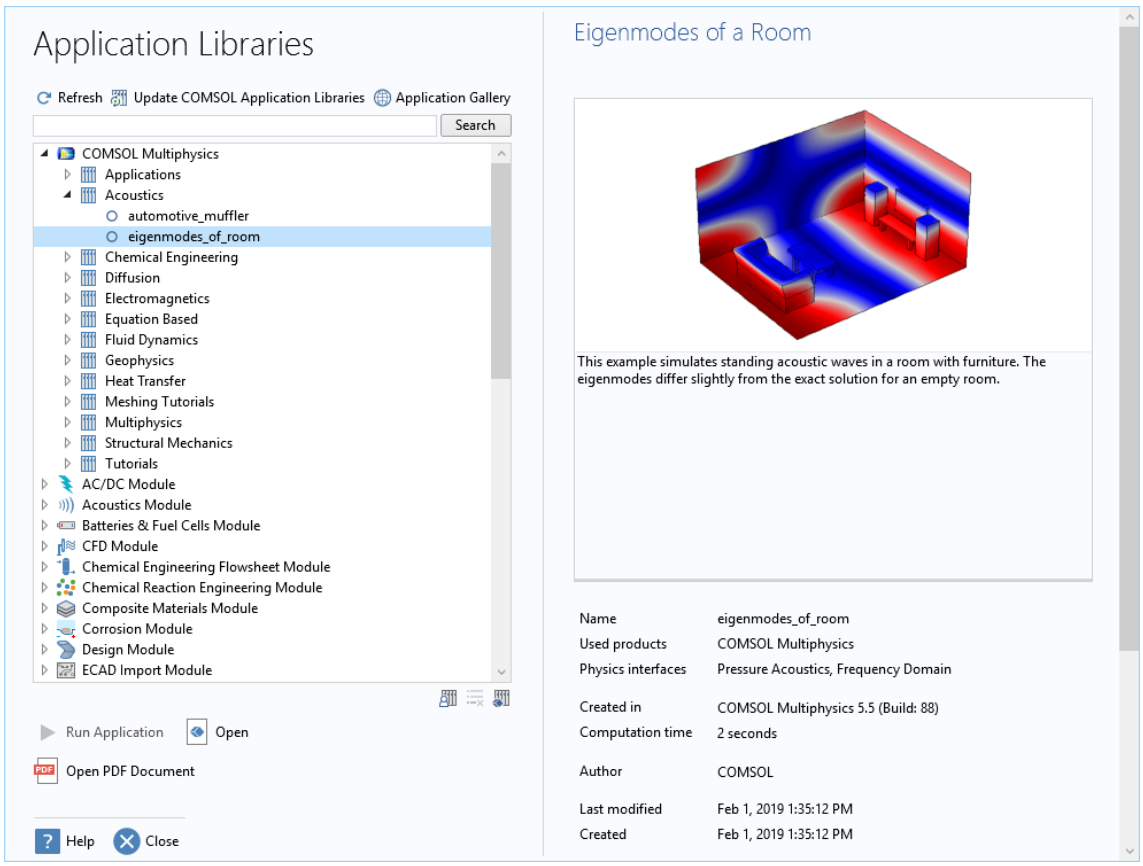

Figure 2-13: The Application Libraries window with Eigenmodes of a Room highlighted in the tree. Specific information about the model or application is displayed to the right, including its name and the computation time.

Win	To open the **Application Libraries** window ( ): • From the **Home** toolbar, **Windows** menu, select **Application Libraries**. • You can also customize the Quick Access Toolbar and then click the **Application Libraries** button on the toolbar. See Windows Toolbars and Menus. • From the **File** menu select **Application Libraries**.

Mac Linux	To open the **Application Libraries** window ( ): • In the Main toolbar, click the **Application Libraries** button. • Select **Windows>Application Libraries**.

Browse through the **Application Libraries** tree to see what is available. Click to highlight the file in the tree and read information about it to the right, or search for a specific application. The information for each application includes:

- The COMSOL products used.
- The physics interfaces used.
- The version that the application was created in.
- The computation time. If you hover over the computation time, a tooltip displays information about the computer used for the computation (CPU, clock rate, and number of cores) and, if applicable, the solution times for each study step.
- The dates and times for when the application was created and last modified.

When you browse the tree, you may notice that three different icons are used for the model and application nodes. Their respective look and significance are as follows:

- (*solved*) — The file is complete with built meshes and solutions.
- (*compact*) — The file contains no stored meshes or solutions. A solved version is available for download via Application Library Update (except in a few cases where the file is a template related to another, regular, model).
- (*preview*) — The file is a preview of an application or a model file, containing only what is needed to represent the model in this particular context, including the model description and information about used products and physics interfaces and the computation time. Solved and compact versions are available for download. Model documentation will be available if you have specified the use of online help (see The Help Window and Topic-Based Help for details on how to do this).

The following sections describe what is available and what you can do from the **Application Libraries** window:

- The Applications Folders
- Running or Opening a Model or Application and Its Documentation
- Downloading MPH-Files With or Without Solutions
- Searching the Application Libraries
- The Application Library Update Window

You can also set the root directory and create and remove a user-defined library as described next.

APPLICATION LIBRARY PREFERENCES

The following settings can be modified using the buttons at the bottom of the **Application Libraries** tree on the **Application Libraries** page in The Preferences Dialog Box and — if the **Allow managing libraries in the Application Libraries window** check box on that page is selected (the default) — also in the **Application Libraries** window itself.

Add User Application Library

Click the **Add User Application Library** button ( ) to add customized folders. In the **Add User Application Library** dialog box, navigate to a location on your computer and select an existing directory or click **Make New Folder** to create a custom folder. Click **OK** to save the changes and exit, or **Cancel** to exit without saving.

	It is not possible to add an application library identical to, containing, or being contained in, an already used application library.

Optionally, you can replace the standard folder icon ( ) with custom icons of your choice that reflect the content of your library folders. To use a custom icon for a folder, create a PNG-file with an image size of 16-by-16 pixels and save it in the folder under the name `folder.png`.

Set the COMSOL Application Libraries Root

Click the **Set COMSOL Application Libraries Root Directory** button ( ) to edit or set the root folder. This redirects the COMSOL software to a different folder where customized applications can be stored.

In the **Set COMSOL Application Libraries Root Directory** dialog box, navigate to the new root folder location or click **Make New Folder**. Click **OK** to save the changes and exit, or **Cancel** to exit without saving.

Remove Selected Library

This button is enabled after a user application library folder has been created. Select a user application library root folder in the **Application libraries** tree and then the click the **Remove Selected** ( ) button to remove the library from the tree.

The Applications Folders

In the **Applications** library folders you find runnable applications with custom user interfaces tailored with the Application Builder to simplify solving a specific problem using COMSOL Multiphysics. To run an application, click the (▶) **Run Application** button. If, instead, you want to explore how the application is constructed, click ( ) **Open**. For applications in this folder, clicking the ( ) **Open PDF document** button launches the PDF document that you can access from the running application. If no such document is available, this button is not activated. For further details, see the next section.

Running or Opening a Model or Application and Its Documentation

RUNNING AN APPLICATION

You can run an application built with the Application Builder by clicking ▶ **Run application**. This button is not activated for models.

OPENING A MODEL OR APPLICATION

Once you have located the file you want to open — for example, you used a search and it is successful (see Searching the Application Libraries), or you browsed the **Application Libraries** tree — then to open the file:

- Double-click the name in the tree.
- Select the name, then click **Open**.
- Right-click the name, then from the context menu select **Open**.

!	It is possible to open and postprocess models that include functionality that you have blocked or that your license does not include. Nodes with functionality that requires a license for a product that is blocked or not available get a **License Error** subnode ( ), where you find information about the missing but required product license. Unless you disable or remove such nodes, it is not possible to re-solve such models.

If the node represents a solved model (●) or a compact (○) or solved application, the file will open directly. If, instead, the file is a compact model MPH-file or a preview file (◌) and you are connected to the internet, you will be presented with the applicable download options:

- For a compact file, choose between opening the local model MPH-file and downloading the solved version before opening.

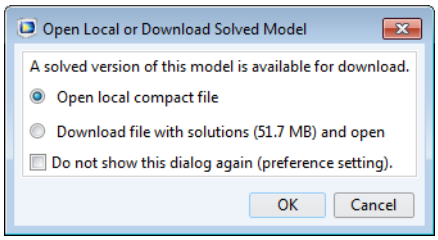

  If you select **Do not show this dialog again (preference setting)**, the local file will open directly the next time you open a compact model. If you change your mind later, you can control the behavior using the **Ask about download before opening compact application file check box** on the **Application Libraries** page of the **Preferences** dialog

- For a preview file, choose between downloading the file with or without solutions, that is between the solved and the compact MPH-file.

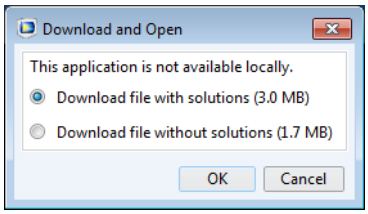

	The approximate download sizes are displayed next to the options. For models, the numbers shown do not include the documentation, which is downloaded together with the MPH-file if you have chosen to install documentation.

!	If you have no internet connection or if the Application Library Update server is unavailable for some other reason, these dialogs will not appear and the associated context-menu options will not be shown. You can entirely disable availability checks on the **Preferences** dialog's **Application Libraries** page by clearing **Check Application Library Update availability on first access**. (If you already opened the **Application Libraries** window, this setting will take effect in the next session.)

OPENING A PDF DOCUMENT

To read the documentation in PDF format, including step-by-step instructions:

- Click to highlight the name in the tree, then click **Open PDF Document**.
- Right-click the name, then from the context menu select **Open PDF Document**.

	You can enable the **Open PDF Document** button for a user-library model or application by placing a PDF-file with the same name as the MPH-file in the same folder.

	PDF and HTML documentation is available also for preview nodes if online help is activated; see The Help Window and Topic-Based Help.

OPENING THE APPLICATION GALLERY

The Application Gallery, which is a part of the COMSOL website, provide access to a large number of models and applications, and you can download the MPH-files, PDF documentation, and other related files to extend the application libraries. Click the **Application Gallery** button ( ) above the application libraries tree to open the Application Gallery in a web browser.

Downloading MPH-Files With or Without Solutions

REPLACING COMPACT FILES

To replace compact MPH-files, you can download the files complete with solutions via **Application Library Update** (see The Application Library Update Window). Alternatively, right-click a compact node ( ) in the **Application Libraries** tree and choose **Download File with Solutions**.

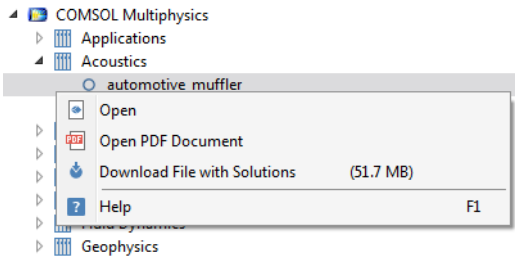

You can also generate the complete models by building the mesh sequences and computing the studies.

!	The procedure for restoring the solutions can involve other steps, such as adjusting physics interface settings. See the individual documentation for details if the simple approach does not work.

REPLACING PREVIEW FILES

To replace a preview file, use **Application Library Update** or right-click the node in the **Application Libraries** tree and choose between **Download File with Solutions** and **Download File Without Solutions**.

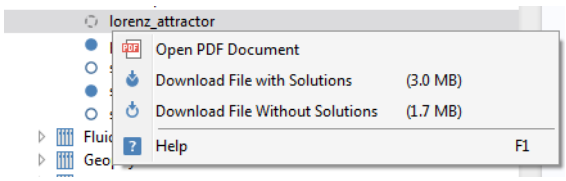

Searching the Application Libraries

In the **Application Libraries** window, you can **Search** the application libraries to find any files using a specific feature. For example, enter all or part of the name, a physics interface name, a feature name, a feature tag or name prefixed by '@', or any other phrase or words or and click **Search**.

By default, the search includes all words in the **Search** field (with space signifying logical AND).

	COMSOL files are named using an underscore between words (for example, *effective_diffusivity*) because the filename is also the name of the corresponding Model MPH-file. The underscore is required to form a valid filename, so it is recommended that you, if you are not sure of the full name, enter only the first word (rather than multiple words separated by spaces) in the **Search** field when searching for a model or application name.

	The search in the **Application Libraries** window does not include the models' PDF documents. To search for text in the model documentation, use the COMSOL Documentation window and select **Application libraries** from the **Search scope** list to limit the search for the application libraries (see Searching the Documentation).

SEARCH PARAMETERS FOR MODELS AND APPLICATIONS

- To search for models and applications by filename only, use the prefix "@name:", for example `@name:busbar`. You can also use the wildcard character '*' at the beginning and the end of the search expression, for example `@name:fluid*` or `@name:*electr*`.
- To search for models and applications whose computation time (as displayed in the **Application Libraries** window) falls within a specific range, use the prefix "`@time:`". For example, the search expression `@time:>=1[h] <=2[h]` returns all models and applications with a computation time between 1 and 2 hours. The supported relational operators are < (the default if no operator is given), >, <=, >=, and ==. Elapsed times can be expressed using the supported time units (see the section SI Base, Derived, and Other Units in The COMSOL Modeling Environment chapter for details). If no unit is specified, the expression entered is assumed to be given in seconds.
- If you enter more than one search term separated by spaces (in a search that is not restricted to filename using the "`@name`" prefix), the search finds files where all of the search terms appear.
- Limit the search to tags (identifiers) with the prefix "`@tag:`". For example, `@tag:genext` finds all files using a General Extrusion node, and `@tag:ehs` finds all files with an Electron Heat Source node.
- Limit the search to node labels (excluding trailing digits and tags enclosed in parentheses) with the prefix "`@label:`". To search for labels that include spaces, you need to enclose the label text within quotes. For example, `@label:"point evaluation"` finds files containing Derived Values nodes of Point Evaluation type with the default label base (as shown immediately below the window label in the **Settings** window).
- Limit the search to type names with the prefix "`@type:`". For example, `@type:segregated` finds all files using a segregated solver, `@type:slider` finds all applications containing a Slider form object, and `@type:bodyload` finds all files with a Body Load node.To find out the type names, consult the *COMSOL Programming Reference Manual* or, for application form objects, the *COMSOL Multiphysics Application Programming Guide*. Alternatively, you can save an application as a Model File for Java or Model File for MATLAB and look up the second argument for the `create(…)` method for an object of the type of node you want to search for.
- To search for a specific physics interface, use the scoping syntax `@physics:`*`id`*, where *id* is a default physics-interface identifier (forming the base of the tags shown in the **Model Builder** window if you have selected **Model Tree Node Text>Tag** in the window's toolbar). For example, enter `@physics:ec` to find all models that use the Electric Currents interface. Similarly, enter `@geom:if` to search for models that include an If statement (node) in the geometry sequence. Table 2-3 lists the supported model-object context scopes.
- The model-context search scopes `@cpl`, `@export`, `@func`, `@multiphysics`, `@numerical`, `@probe`, and `@selection` used without an identifier return all models that contain *any* node of the corresponding type; see Table 2-3.

- In addition to the model-object scopes, the following custom keywords are available:
  - `@keyword:tutorial` — finds introductory and tutorial models;
  - `@keyword:verification` — finds models classified as verification models or benchmarks;
  - `@keyword:industrial` — finds models classified as industrial applications.
- To find all models and applications that are locally available in solved or compact form, or only as previews, use the search strings `$solved`, `$compact`, and `$preview` respectively

TABLE 2-3: MODEL-OBJECT SEARCH SCOPES.

SCOPE	DESCRIPTION	EXAMPLES
`@cpl`	Search for component-coupling nodes.	`@cpl:genext`, `@cpl`
`@dataset`	Search for dataset nodes.	`@dataset:cpt`
`@export`	Search for export nodes.	`@export:anim`, `@export`
`@func`	Search for function nodes.	`@func:wv`, `@func`
`@geom`	Search for geometry-feature nodes.	`@geom:c`
`@mesh`	Search for mesh-feature nodes.	`@mesh:swe`
`@multiphysics`	Search for multiphysics-coupling nodes.	`@multiphysics:emh`, `@multiphysics`
`@numerical`	Search for derived-values nodes.	`@numerical:min`, `@numerical`
`@physics`	Search for physics-interface nodes.	`@physics:c`
`@probe`	Search for probe nodes.	`@probe:bnd`, `@probe`
`@result`	Search for plot-feature nodes.	`@result:slc`
`@selection`	Search for selection nodes.	`@selection:box`, `@selection`
`@sol`	Search for solver nodes.	`@sol:se`
`@study`	Search for study nodes.	`@study:param`

When a search result is presented, hover over a top-level node in the tree to see the number of matching files under the corresponding folder. If the search does not return any results, the **Application Libraries** window contains the message **No Results Found**. Click the **Refresh** button ( ) under the tree to return to the root **Application Libraries** folder list.

The Application Library Update Window

Application Library Update is a service that provides new and updated models and applications for the application libraries of the COMSOL products that your license includes. The text below describes how to use the Application Library Update service.

> Using the COMSOL **Application Library Update** service requires internet access. For a default installation, you also need to run COMSOL as an administrator. See Proxy Server Settings section below for instructions on how you can modify your installation to avoid this restriction.

APPLICATION LIBRARY UPDATE

Open the **Application Library Update** window by clicking **Update COMSOL Application Libraries** in the **Application Libraries** window or by going to the **File>Help** menu (Windows users) or the **Help** menu (macOS and Linux users) and choosing **Update COMSOL Application Libraries** ( ).

When the **Application Library Update** window opens, choose if you want to download files containing solutions (**Solved**) or more compact versions of the models and applications (**Compact**), then click **Find Applications** to check

if all the models and applications you have are up to date or if there are any updated or new ones. If the message **Your Application Libraries are up to date** displays, no updated or new models or applications are available.

If the library is not up to date, browse the list that appears with a description and image. Choose which ones to download by selecting or clearing the check boxes next to the thumbnail images. By default all check boxes are selected; by clicking **Clear selection** and **Select all** you can change the global selection state.

	Note that if you chose to download solved models and applications and then choose **Select all**, the download size can be on the order of 10s of GB if you have license for several products. Therefore, it may be wiser to choose the compact option and then download solved versions of the examples you are interested in directly from the **Application Libraries** window.

Click the **Download** button to download the selected models and applications. The download time depends on the size of the files, which is listed for each file, and the bandwidth of the internet connection.

	Also see the *Introduction to Application Builder*.

Proxy Server Settings

If you connect to the internet through a web proxy, you can specify the required settings in the **Help** section of the Preferences dialog box; for details, see Proxy Server Settings.

DESTINATION DIRECTORIES FOR LIBRARY UPDATES

To edit these settings under **Destination directories for library updates**, open The Preferences Dialog Box and go to the **Updates** section.

The **Destinations** list provides two options for specifying which application, documentation, and part directories are synchronized with the COMSOL Multiphysics server when you launch an Application Library Update or Part Library Update (see the next section) request:

- **Current directories** (default): Synchronize with application MPH-files under the COMSOL Application Libraries root set on the **Preferences** dialog's **Application Libraries** page, with documentation files under the directory specified in the **Documentation root directory** field on the **Preferences** dialog's **General** page, and with part MPH-files under the COMSOL Part Libraries root set on the **Preferences** dialog's **Part Libraries** page.
- **Specify custom directories**: Choosing this option lets you specify COMSOL Application Libraries, documentation, and COMSOL Part Libraries root directories separate from those of your current COMSOL Desktop environment.

By default, the COMSOL Application Libraries, COMSOL Part Libraries, and documentation root directories are located directly under the COMSOL installation root directory, in `applications/`, `parts/`, and `doc/`, respectively. This typically implies that special permissions are required for saving downloaded files, and it can therefore be beneficial to move or copy the directories to a different location. The settings referred to in this section are provided to let you customize Application Library Update to the IT environment of your organization.

The Part Library Update Window

Part Library Update is a service that provides new and updated geometry parts for the part libraries of the COMSOL products that your license includes. The text below describes how to use the Part Library Update service.

	Using the COMSOL **Part Library Update** service requires internet access. For a default installation, you also need to run COMSOL as an administrator. If you connect to the internet through a proxy server, see the Proxy Server Settings section for the relevant settings.

PART LIBRARY UPDATE

Open the **Part Library Update** window by clicking **Update COMSOL Part Libraries** in the **Part Libraries** window or by going to the **File>Help** menu (Windows users) or the **Help** menu (macOS and Linux users) and choosing **Update COMSOL Part Libraries** ( ).

If the message **Your Part Libraries are up to date** displays when the **Part Library Update** window opens, no updated or new geometry parts are available. If the library is not up to date, browse the list that appears with a description and image. Choose which ones to download by selecting or clearing the check boxes next to the thumbnail images. By default all check boxes are selected; by clicking **Clear selected** and **Select all** you can change the global selection state.

Click the **Download** button to download the selected geometry parts. The download time depends on the size of the files, which is listed for each geometry part, and the bandwidth of the internet connection.

The Physics Interfaces

This section is an overview of the core physics interfaces included with a COMSOL Multiphysics license. If your license include add-on modules, there are additional physics interfaces described in the individual documentation for each module.

- Building Models in the Model Builder
- Adding and Inserting Physics Interfaces
- Modeling Guidelines
- Creating a New Model

Introduction to the Physics Interfaces

Solving PDEs generally means you must take the time to set up the underlying equations, material properties, and boundary conditions for a given problem. COMSOL Multiphysics, however, relieves you of much of this work. The software provides a number of *physics interfaces* that consist of nodes and settings that set up the equations and variables for specific areas of physics. An extensive set of physics-dependent variables makes it easy to visualize and evaluate the important physical quantities using conventional terminology and notation.

Suites of physics interfaces that are optimized for specific disciplines together with specialized application libraries are available in a group of optional products. See The COMSOL Multiphysics Modules and Interfacing Options.

A complement to the interfaces for physics, special interfaces for equation-based modeling simplify the setup of PDEs for modeling that does not explicitly refer to any particular application field. In addition, other interfaces supplement the physics with special functionality such as the Sensitivity and Moving Mesh user interfaces.

- Physics Groups and Subgroups
- Physics Interface Guide
- Selecting Physics Interfaces

Physics Groups and Subgroups

The Select Physics page in the **Model Wizard**, as well as The Add Physics Window, contain groups and subgroups of physics and mathematics interfaces (some items only display if a license includes the corresponding add-on modules).

RECENTLY USED ( )

This group contains the most recently used physics interfaces for easy access.

AC/DC ( )

This group contains physics interfaces for low-frequency electromagnetics such as electrostatics, electric currents and magnetic fields together with multiphysics couplings to heat transfer, structural mechanics and charged particle dynamics.

ACOUSTICS ( )

This group contains acoustics-based physics interfaces. Except for the Pressure Acoustics group, these subgroups require additional licenses:

- Elastic Waves
- Acoustic-Structure Interaction
- Aeroacoustics
- Thermoviscous Acoustics
- Ultrasound
- Geometrical Acoustics
- Pipe Acoustics

CHEMICAL SPECIES TRANSPORT ( )

This group contains chemical species transport physics interfaces used, for example, for convection and diffusion, solving for the species concentrations and for chemical reactions. These subgroups are available depending on the specific license:

- Moisture Transport
- Reacting Flow (including an additional Turbulent Flow subgroup)
- Reacting Flow in Porous Media
- Rotating Machinery, Rotating Flow

ELECTROCHEMISTRY ( )

This group contains electrochemistry physics interfaces for modeling electrochemical components such as batteries and fuel cells. This group and its subgroups are only available with additional licenses:

- Battery Interfaces
- Corrosion, Deformed Geometry
- Electrodeposition, Deformed Geometry

FLUID FLOW ( )

This group contains fluid flow physics interfaces such as laminar single-phase flow and, with add-on modules, multiphase flow and turbulent flow. These subgroups are available based on the license:

- Single-Phase Flow (including additional Turbulent Flow and Rotating Machinery, Fluid Flow subgroups)
- Thin-Film Flow
- Multiphase Flow (including additional Bubbly Flow; Mixture Model; Euler-Euler Model; Two-Phase Flow, Level Set; Two-Phase Flow, Phase Field; Two-Phase Flow, Moving Mesh; Three-Phase Flow, Phase Field; and Rotating Machinery, Multiphase Flow subgroups)
- Porous Media and Subsurface Flow
- Nonisothermal Flow (including additional Turbulent Flow and Rotating Machinery, Nonisothermal Flow subgroups).
- High Mach Number Flow (including an additional Turbulent Flow subgroup)
- Rarefied Flow
- Particle Tracing
- Fluid-Structure Interaction

HEAT TRANSFER ( )

This group contains physics interfaces for heat transfer in solids, fluids, pipes, and in porous media. Other physics interfaces are available for bioheat transfer and for heat and moisture transport. There are also multiphysics interfaces for thermal multiphysics applications such as Joule heating. These subgroups are available depending on the specific license:

- Heat and Moisture Transport
- Thin Structures (for heat transfer in thin shells, thin films, and fractures)
- Conjugate Heat Transfer (including an additional Turbulent Flow subgroup)
- Radiation
- Electromagnetic Heating
- Metal Processing

OPTICS ( )

This group contains physics interfaces for electromagnetic wave propagation in linear and nonlinear optical media for accurate component simulation and design optimization. This group and the subgroups are only available with additional licenses

- Ray Optics
- Wave Optics

PLASMA ( )

This group contains physics interfaces for plasma modeling. This group and the Equilibrium Discharges and Species Transport subgroups require the Plasma Module.

RADIO FREQUENCY ( )

This group contains physics interfaces for high-frequency electromagnetic field simulations solving the full Maxwell equations. This group is only available with the RF Module.

SEMICONDUCTOR ( )

This group contains physics interfaces that solves Poisson's equation for the electric potential and the drift-diffusion equations for electrons and holes in a semiconductor material: Semiconductor interfaces and interfaces for solving the Schrödinger and Schrödinger-Poisson equations.This group is only available with the Semiconductor Module.

STRUCTURAL MECHANICS ( )

This group contains structural mechanics physics interfaces for example to study displacements and stresses in solids and for multibody dynamics, fatigue, thermal stress, piezoelectricity, and other structural multiphysics couplings. Depending on licenses, the following subgroups can be available:

- Rotordynamics
- Thermal Stress
- Piezoresistivity

MATHEMATICS (Δu)

This group contains mathematics interfaces for solving PDEs, ODEs, and DAEs, for optimization (which requires the Optimization Module) and sensitivity analysis, and for modeling moving meshes and parameterized geometry. These subgroups are available:

- PDE Interfaces (including a Lower Dimensions subgroup)
- ODE and DAE Interfaces

- Optimization and Sensitivity
- Classical PDEs
- Moving Interface (available with either the CFD Module or Microfluidics Module)
- Deformed Mesh
- Wall Distance
- Mathematical Particle Tracing (available with the Particle Tracing Module)
- Curvilinear Coordinates

!	For a list of all the physics interfaces under each group and subgroup, see the individual documentation included with each add-on module. Or search the online Help for the key words *Physics Interface Guide*.

	• Creating a New Model • Physics Interface Guide • Selecting Physics Interfaces

Adding and Inserting Physics Interfaces

THE ADD PHYSICS WINDOW

The **Add Physics** window is similar to the **Select Physics** window accessed through The Model Wizard. It has the same physics interfaces available. This window is a quick way to add physics interfaces to models.

To open the **Add Physics** window:

Win	• Right-click a **Component** node and choose **Add Physics**. • From the **Home** toolbar, click **Add Physics** • Select **Windows>Add Physics**. • From the **Physics** toolbar, click **Add Physics** .

Mac Linux	• Right-click a **Component** node and choose **Add Physics**. • In the **Model Toolbar**, click **Add Physics** . • In the **Physics Contextual Toolbar**, click **Add Physics** . • Select **Windows>Add Physics**.

	The **Add Physics** toolbar button is a toggle button: Click it again to close the **Add Physics** window.

TO ADD PHYSICS INTERFACES TO A MODEL COMPONENT

1 In the **Add Physics** window, either enter a **Search** term or navigate the tree to locate the physics interface to be added to the **Component**.

The tree organizes the available physics interfaces by application areas such as fluid flow, heat transfer, and structural mechanics. The physics interfaces found in the modules your license supports display in the different

application areas. In some cases, licensing of a module adds physics interfaces to these application areas as well as attributes to existing physics interfaces, which are enhanced with additional functionality. The **Recently Used** branch lists the last five physics interfaces used in recent modeling sessions. You can also enter a text string in the search field and click the **Search** button to list all the interfaces with the search term.

	The contents of the **Add Physics** window depends on the space dimension of the active model component. If there are no **Component** nodes in the model, the list of physics interfaces is empty.

2 Once a physics interface is clicked, review and optionally modify any dependent variable names in the **Dependent Variables** section and, for some physics interfaces, specify the number of dependent variables. For PDE interfaces under **Mathematics**, you can also click the **Units** tab to specify units for the equation by defining a unit through a physical quantity for the dependent variable and the source term. See Units for more information about these settings.

If you select multiple physics interfaces, the **Dependent Variables** section is not available.

3 When there is already a physics interface added to the Component, the existing **Studies** are listed under **Physics interfaces in study**. By default, the studies appear with a check mark ( ) in the **Solve** column, which indicates that the study solves for the dependent variables in the physics interface. Click in the column to clear the check mark and exclude the physics interface from that study.

4 Click the **Add to Component** or **Add to Selection** buttons.

- If you click **Add to Component**, the physics interfaces are added to the **Model Builder** and become active in the entire model component's geometry by default. You can also press Enter to add the physics components to the component.
- If you click **Add to Selection**, the physics interfaces are added to the **Model Builder** with a selection taken from the selected geometric entities in the **Graphics** window. This is a method called *preselection*.

COPYING, PASTING, AND INSERTING PHYSICS INTERFACES

You can copy and paste physics interfaces within a COMSOL Multiphysics session and also between COMSOL Multiphysics sessions, as long as the copied physics interface information remains in the clipboard.

To copy a physics interface with all its subnodes, right-click the physics interface node and choose **Copy** (or, for Windows users, click **Copy** on the Quick Access Toolbar). You can then paste it in the same or a new COMSOL Desktop session by right-clicking a compatible **Component** node and choosing, for example, **Paste Solid Mechanics** (or, for Windows users, click, for example, **Paste Solid Mechanics** on the Quick Access Toolbar).

It is also possible to insert physics interfaces from another COMSOL Multiphysics model into a model component. To do so, right-click a **Component** node and choose **Insert Physics from Model**. An **Insert Physics** dialog box appears where you can browse or type the path and name of the COMSOL Multiphysics model file from which you want to insert components in the **Model** field. Select one or more of the physics interfaces in the model from the **Physics** list and then click **OK** to insert them into the current model. The list includes the space dimension for the physics interface so that you can select compatible physics interfaces.

	You can insert a physics from another space dimension if it is applicable in the component you insert it into. Most physics applicable in 2D axial symmetry is applicable in 3D, so an interface specified in a 2D axisymmetric component can therefore be inserted in a 3D component.

Some aspects when inserting or pasting a physics interface into an existing model component:

- All selections of a physics interface and its physics features depend on the geometry they belong to. When you insert or paste a physics interface into another component and geometry, there is a high risk of thats selections change or become empty.
- Any references to named selections will be broken, and no selection nodes are included automatically in the insertion process.
- All use of global parameters, functions, variables, materials, multiphysics couplings, and coordinate systems will be invalid after the insertion process unless an item with the same name exists in the target component. No attempt is made to automatically include any item in the insertion process. Materials should be of minor importance if the physics interfaces consistently use the option **From material** in all their material property settings.
- Some physics features are not applicable in all dimensions, so these will simply be ignored. You will be notified about this in the message dialog box.

Altogether, these aspects may cause an insert or paste operation to be incomplete to some degree. In some cases, the difference is reported in a message dialog box after the insertion process has finished. Click **Cancel** in this dialog box to revert the insertion process.

- Creating a New Model
- Physics Interface Guide

Physics Interface Guide

The table lists the physics and mathematics interfaces in COMSOL Multiphysics and the availability for 1D, 1D axisymmetric, 2D, 2D axisymmetric, and 3D geometries.

PHYSICS INTERFACE	ICON	TAG	SPACE DIMENSION	AVAILABLE PRESET STUDY TYPE
AC/DC				
Electric Currents		ec	All dimensions	Stationary
Electrostatics		es	All dimensions	Stationary; Time Dependent
Magnetic Fields		mf	2D, 2D axisymmetric	Stationary; Frequency Domain
Acoustics				
Pressure Acoustics				
Pressure Acoustics, Frequency Domain		acpr	All dimensions	Eigenfrequency; Frequency Domain
Chemical Species Transport				
Transport of Diluted Species		tds	All dimensions	Stationary; Time Dependent

PHYSICS INTERFACE	ICON	TAG	SPACE DIMENSION	AVAILABLE PRESET STUDY TYPE
Fluid Flow				
Single-Phase Flow				
Laminar Flow		spf	3D, 2D, 2D axisymmetric	Stationary; Time Dependent
Heat Transfer				
Heat Transfer in Solids		ht	All dimensions	Stationary; Time Dependent
Heat Transfer in Fluids		ht	All dimensions	Stationary; Time Dependent
Electromagnetic Heating				
Joule Heating[1,]		—	All dimensions	Stationary; Time Dependent
Structural Mechanics				
Solid Mechanics		solid	3D, 2D, 2D axisymmetric	Stationary; Eigenfrequency; Time Dependent
Mathematics				
Wall Distance		wd	All dimensions	Stationary; Time Dependent
Curvilinear Coordinates		cc	All dimensions	Stationary; Eigenvalue
PDE Interfaces				
Coefficient Form PDE		c	All dimensions	Stationary; Time Dependent; Eigenvalue
General Form PDE		g	All dimensions	Stationary; Time Dependent; Eigenvalue
Wave Form PDE		wahw	All dimensions	Time Dependent
Weak Form PDE		w	All dimensions	Stationary; Time Dependent; Eigenvalue
PDE, Boundary Elements		pdebe	3D and 2D	Stationary
Lower Dimensions				
Coefficient Form Boundary PDE		cb	All dimensions	Stationary; Time Dependent; Eigenvalue
Coefficient Form Edge PDE		ce	3D	Stationary; Time Dependent; Eigenvalue

PHYSICS INTERFACE	ICON	TAG	SPACE DIMENSION	AVAILABLE PRESET STUDY TYPE
Coefficient Form Point PDE	Δu	cp	3D, 2D, 2D axisymmetric	Stationary; Time Dependent; Eigenvalue
General Form Boundary PDE	Δu	gb	All dimensions	Stationary; Time Dependent; Eigenvalue
General Form Edge PDE	Δu	ge	3D	Stationary; Time Dependent; Eigenvalue
General Form Point PDE	Δu	gp	3D, 2D, 2D axisymmetric	Stationary; Time Dependent; Eigenvalue
Weak Form Boundary PDE	$\int du$	wb	all dimensions	Stationary; Time Dependent; Eigenvalue
Weak Form Edge PDE	$\int du$	we	3D	Stationary; Time Dependent; Eigenvalue
Weak Form Point PDE	$\int du$	wp	3D, 2D, 2D axisymmetric	Stationary; Time Dependent; Eigenvalue
ODE and DAE Interfaces				
Global ODEs and DAEs	$\frac{d}{dt}$	ge	All dimensions	Stationary; Eigenfrequency; Time Dependent; Frequency Domain; Eigenvalue
Domain ODEs and DAEs	$\frac{d}{dt}$	dode	All dimensions	Stationary; Time Dependent; Eigenvalue
Events		ev	All dimensions	Time Dependent
Boundary ODEs and DAEs	$\frac{d}{dt}$	bode	All dimensions	Stationary; Time dependent; Eigenvalue
Edge ODEs and DAEs	$\frac{d}{dt}$	eode	3D	Stationary; Time dependent; Eigenvalue
Point ODEs and DAEs	$\frac{d}{dt}$	pode	3D, 2D, 2D axisymmetric	Stationary; Time dependent; Eigenvalue
Optimization and Sensitivity				
Optimization Requires the Optimization Module		opt	All dimensions	Stationary; Eigenfrequency; Time Dependent; Frequency Domain; Eigenvalue
Sensitivity		sens	All dimensions	Stationary; Eigenfrequency; Frequency Domain; Eigenvalue; Time Dependent (available with the Optimization Module)
Classical PDEs				
Laplace Equation	∇^2	lpeq	1D, 2D, 3D	Stationary
Poisson's Equation	∇^2	poeq	1D, 2D, 3D	Stationary
Wave Equation	∇^2	waeq	1D, 2D, 3D	Time Dependent

PHYSICS INTERFACE	ICON	TAG	SPACE DIMENSION	AVAILABLE PRESET STUDY TYPE
Helmholtz Equation	∇^2	hzeq	1D, 2D, 3D	Stationary
Heat Equation	∇^2	hteq	1D, 2D, 3D	Stationary; Time Dependent
Convection-Diffusion Equation	∇^2	cdeq	1D, 2D, 3D	Stationary; Time Dependent
Stabilized Convection-Diffusion Equation	∇^2	scdeq	1D, 2D, 3D	Stationary; Time Dependent
Deformed Mesh				
Deformed Geometry		dg	All dimensions	Stationary; Time Dependent; Frequency Domain; Eigenvalue
Moving Mesh		ale	All dimensions	Stationary; Time Dependent; Frequency Domain; Eigenvalue

[1] This physics interface is a predefined multiphysics coupling that automatically adds all the physics interfaces and coupling features required.

Common Physics Interface and Feature Settings and Nodes

There are several common settings and sections available for the physics interfaces and feature nodes (Table 2-4). Some of these sections also have similar settings or are implemented in the same way no matter the physics interface or feature being used. There are also some physics feature nodes (Table 2-5) that display in COMSOL Multiphysics.

In each module's documentation, only unique or extra information is included; standard information and procedures are centralized in this manual.

Table 2-4 has links to common sections and Table 2-5 to common feature nodes. You can also search for information: press F1 to open the **Help** window or Ctrl+F1 to open the **Documentation** window.

SHOW MORE PHYSICS OPTIONS

To display additional sections and options for the physics interfaces (and other parts of the model tree), click the **Show More Options** button ( ) on the **Model Builder** and then select the applicable options in the **Show More Options** dialog box that opens.

After selecting some options, sections display on the **Settings** window when a node is clicked, or additional nodes are made available from the **Physics** toolbar or context menu. Selecting **Advanced Physics Options** either adds an **Advanced** settings section or enables nodes in the context menu or **Physics** toolbar. In many cases these options are described in the individual documentation.

For more information about the Show options, see Showing More Options and The Model Builder.

COMMON PHYSICS SETTINGS SECTIONS

TABLE 2-4: COMMON PHYSICS SETTINGS SECTIONS

SECTION	CROSS REFERENCE AND NOTES
Advanced Settings — Pseudo time stepping	Pseudo Time Stepping and Pseudo Time Stepping for Laminar Flow Models
Advanced Settings — Frames	See Frames.
Advanced	This section can display after selecting Advanced Physics Options. The Advanced section is often unique to a physics interface or feature node.
Anisotropic materials	For some User defined parameters, the option to choose Isotropic, Diagonal, Symmetric, or Full displays. See Modeling Anisotropic Materials for information.
Consistent Stabilization	See Stabilization.
Constraint Settings	Constraint Reaction Terms, Weak Constraints, and Symmetric and Nonsymmetric Constraints
Coordinate System Selection	Coordinate Systems Selection of the coordinate system is standard in most cases. Extra information is included in the documentation as applicable.
Dependent Variables	Predefined and Built-In Variables This section is unique for each physics interface, although some interfaces have the same dependent variables.
Discretization	Settings for the Discretization Sections
Discretization — Frames	See Frames.
Equation	Physics Nodes — Equation Section The equation that displays is unique for each interface and feature node, but how to access it is centrally documented.
Frames (Advanced Settings — Frames and Discretization — Frames)	Handling Frames in Heat Transfer and About Frames
Geometric entity selections	Working with Geometric Entities Selection of geometric entities (Domains, Boundaries, Edges, and Points) is standard in most cases. Extra information is included in the documentation as applicable.
Inconsistent Stabilization	See Stabilization.
Settings	Predefined and Built-In Variables Displaying Node Names, Tags, and Types in the Model Builder There is a unique Name for each physics interface.
Material Type	About Using Materials in COMSOL Multiphysics The Settings Window for Material Selection of material type is standard in most cases. Extra information is included in the documentation as applicable.

TABLE 2-4: COMMON PHYSICS SETTINGS SECTIONS

SECTION	CROSS REFERENCE AND NOTES
Model Inputs	About Model Inputs and Model Inputs and Multiphysics Couplings Selection of Model Inputs is standard in most cases. Extra information is included in the documentation as applicable. To define the absolute pressure for heat transfer, see the settings for the Fluid node. To define the absolute pressure for a fluid flow interface, see the settings for the Fluid Properties node (described for the Laminar Flow interface). If you have a license for a nonisothermal flow interface, see that documentation for further information.
Override and Contribution	Physics Exclusive and Contributing Node Types Physics Node Status
Pair Selection	Identity and Contact Pairs Continuity on Interior Boundaries Selection of pairs is standard in most cases. Extra information is included in the documentation as applicable. Contact pair modeling requires the Structural Mechanics Module or MEMS Module. Details about this pair type can be found in the respective user's guide.
Stabilization — Consistent and Inconsistent	Numerical Stabilization, Numerical Stability — Stabilization Techniques for Fluid Flow and Heat Transfer Consistent and Inconsistent Stabilization Methods

COMMON FEATURE NODES

TABLE 2-5: COMMON FEATURE NODES

FEATURE NODE	CROSS REFERENCE AND NOTES
Auxiliary Dependent Variable	Auxiliary Dependent Variable
Axial Symmetry	See Symmetry.
Continuity	Continuity on Interior Boundaries and Identity and Contact Pairs. This is standard in many cases. When it is not, the node is documented for the physics interface.
Discretization	Discretization (Node)
Equation View	Equation View The Equation View node's contents is unique for each physics and mathematics interface and feature node, but it is centrally documented.
Excluded Edges, Excluded Points, and Excluded Surfaces	Excluded Points, Excluded Edges, Excluded Surfaces
Global Constraint	Global Constraint. Also see the Constraint Settings section.
Global Equations	Global Equations
Harmonic Perturbation	Harmonic Perturbation, Prestressed Analysis, and Small-Signal Analysis
Initial Values	Physics Interface Default Nodes, Specifying Initial Values, and Dependent Variables This is unique for each physics interface.
Periodic Condition and Destination Selection	Periodic Condition and Destination Selection Periodic Boundary Conditions Periodic Condition is standard in many cases. When it is not, the node is documented for the physics interface.
Pointwise Constraint	Pointwise Constraint. Also see the Constraint Settings section.

TABLE 2-5: COMMON FEATURE NODES

FEATURE NODE	CROSS REFERENCE AND NOTES
Symmetry	Using Symmetries and Physics Interface Axial Symmetry Node. There is also information for the Solid Mechanics interface about Axial Symmetry. This is standard in many cases. When it is not, the node is documented for the physics interface.
Weak Constraint	Weak Constraint. Also see the Constraint Settings section.
Weak Contribution	Weak Contribution (ODEs and DAEs) and Weak Contribution (PDEs and Physics)
Weak Contribution on Mesh Boundaries	Weak Contribution on Mesh Boundaries

- Creating a New Model
- The Add Physics Window
- Showing More Options
- Selecting Physics Interfaces

Creating a New Model

This section describes how to create a new model using The Model Wizard or to begin with a blank model. First you need to Open a New Window to Begin Modeling. It is also useful to have a basic model added to the Model Builder; then you can experiment with The Model Builder, which is described in the Building a COMSOL Multiphysics Model chapter.

Open a New Window to Begin Modeling

To open a **New** window:

- On the **Quick Access Toolbar** (Windows users) or the **Model Toolbar** (macOS and Linux users), click the **New** button ( ).
- Press Ctrl+N.
- Select **File>New**.

After the **New** window opens to the **Model** page, select an option:

- Click the **Model Wizard** button ( ) to open the **Select Space Dimension** window. Go to The Model Wizard section to continue.
- Click the **Blank Model** button ( ) to open COMSOL Multiphysics without any model set up in the Model Builder or return to the default COMSOL Desktop. You can then add components and physics interfaces to the model.

To enable the **Physics Builder** choose **Preferences** ( ) from the **File** menu (Windows users) or from the **Options** menu (macOS and Linux users). Click **Physics Builder** and select the **Enable Physics Builder** check box.

After the applicable check box is selected, go to the **Model Wizard** and on the **New** page under **Physics**, click **Physics Builder** ( ). See the *Physics Builder Manual* for information.

The Model Wizard

The Model Wizard helps you build a model by choosing the space dimension, physics interfaces, and the study you want to use. In the Model Wizard you Select Space Dimension, Select Physics, Review Physics Interface, and finally Select Study.

SELECT SPACE DIMENSION

1 Open the Model Wizard (see Open a New Window to Begin Modeling).

2 On the **Select Space Dimension** page, click to choose the **Component** geometry dimension: **3D**, **2D axisymmetric**, **2D**, **1D axisymmetric**, **1D**, or **0D**.

Component Nodes by Space Dimension

The **Component** node has different icons based on space dimension **0D** (·) (no space dimension), **1D** (—), **1D axisymmetric** ( ), **2D** ( ), **2D axisymmetric** ( ), and **3D** ( ).

	0D is used for interfaces modeling spatially homogeneous systems such as chemical reacting systems, electrical circuits, and general ODEs and DAEs. If you want to import a geometry, this is done in the Model Builder, but make sure you choose spatial dimensions that this geometry exists in. Remember, not all physics interfaces are available for all space dimensions.

	Also add a **Component** node to the **Model Builder**: • By right-clicking the **root** node ( ) and selecting it from the **Add Component** menu. • In the **Home** toolbar, select an option from **Add Component** list.

SELECT PHYSICS

On the **Select Physics** window, there are different ways to select one or several physics interfaces to add to the model. There are also interfaces for PDEs, ODEs, and DAEs, and other mathematical interfaces for equation-based modeling under the **Mathematics** branch.

Once one or more physics interfaces are selected, there are several options to continue; see Figure 2-14. Click to select one of these buttons:

ICON AND NAME	ACTION
Add	Double-click to add the selected physics interface to the **Added physics interfaces** list, or right-click and select **Add physics** to add one or more selected physics interfaces. You can also add the selected physics by pressing Enter. Add as many physics interfaces as you want. You can use the **Review Physics Interface** page to edit the **Dependent Variables** as required. Click **Remove** as required to organize the physics interfaces in the list.
Space Dimension	Click to go back to the **Select Space Dimension** page.
Study	Click to choose the study for the model.
Done	Click to add the physics interface without a study.
Cancel	Click to return to the **New** page of the Model Wizard.
Help	Click to open the context-based **Help** window.

	You can also add physics interfaces from the **Model Builder** and The Add Physics Window: • In the **Home** toolbar, click the **Add Physics** button. • By right-clicking the **Component** node and selecting **Add Physics**.

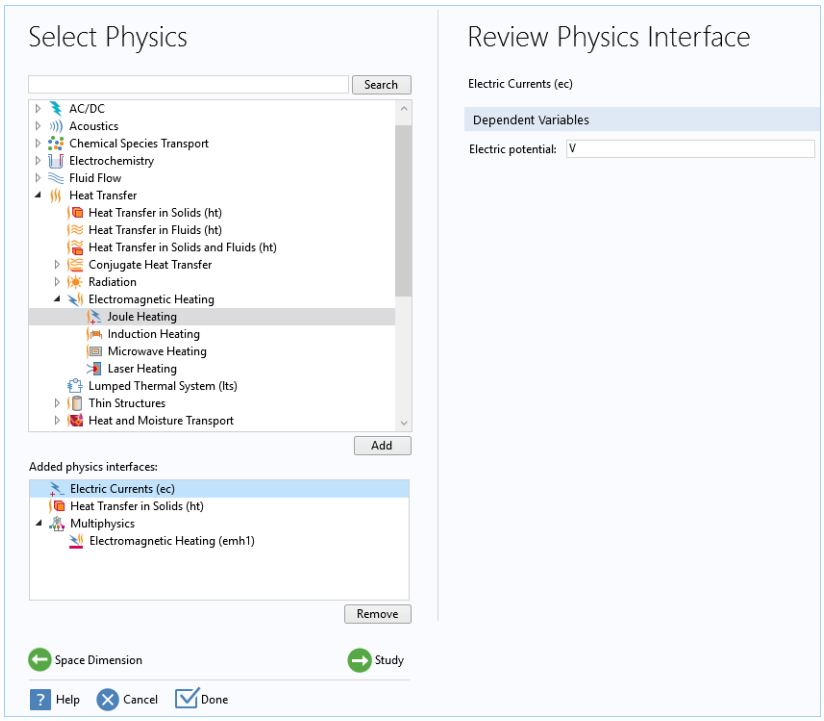

Figure 2-14: The Select Physics and Review Physics Interface windows in the Model Wizard.

REVIEW PHYSICS INTERFACE

Under **Added physics interfaces** (see Figure 2-14), click any interface to open the **Review Physics Interface** page. Here you can review and optionally modify any **Dependent Variables** names and, for some physics interfaces, specify the number of dependent variables. For other physics interfaces you can edit both the name of the field and the field components. Examples of fields with components are the displacement field in a Solid Mechanics interface and the Velocity field for a Laminar Flow interface.

To remove a physics interface already selected, highlight it in the list and click **Remove** under the table.

SELECT STUDY

On the **Select Study** page, click to select the type of study to perform. You can also double-click the study to select it and close the Model Wizard. The available options depend on the set of physics interfaces included in the model. Some study types are applicable to all physics interfaces for which you choose to solve, while others are not, but all are in some way available. The most applicable and common studies, such as **Stationary**, appear at the top of the list under **General Studies**. You can also select a study type from one of the following branches (see Figure 2-15):

- **General Studies** — General studies that are the most applicable for the selected physics interfaces.
- **Preset Studies for Selected Physics Interfaces** — Studies applicable to each physics interface that you have chosen to include. These preset studies appear under subnodes for each physics interface or under **Suggested by Some Physics Interfaces**.
- **Preset Studies for Selected Multiphysics** — Studies applicable to the multiphysics couplings that you have chosen to solve for.
- **More Studies** — Any fundamental study types (**Stationary**, **Time Dependent**, **Eigenfrequency**, **Eigenvalue** and **Frequency Domain**) that are not applicable to any of the physics interfaces being solved for. Also, this branch can contain some advanced composite study types.

- **Preset Studies for Some Physics Interfaces** — The study types recognized by some, but not all, of the physics interfaces being solved for.
- **Empty Study** — An empty study that will not perform any type of study unless you add some study steps to it.

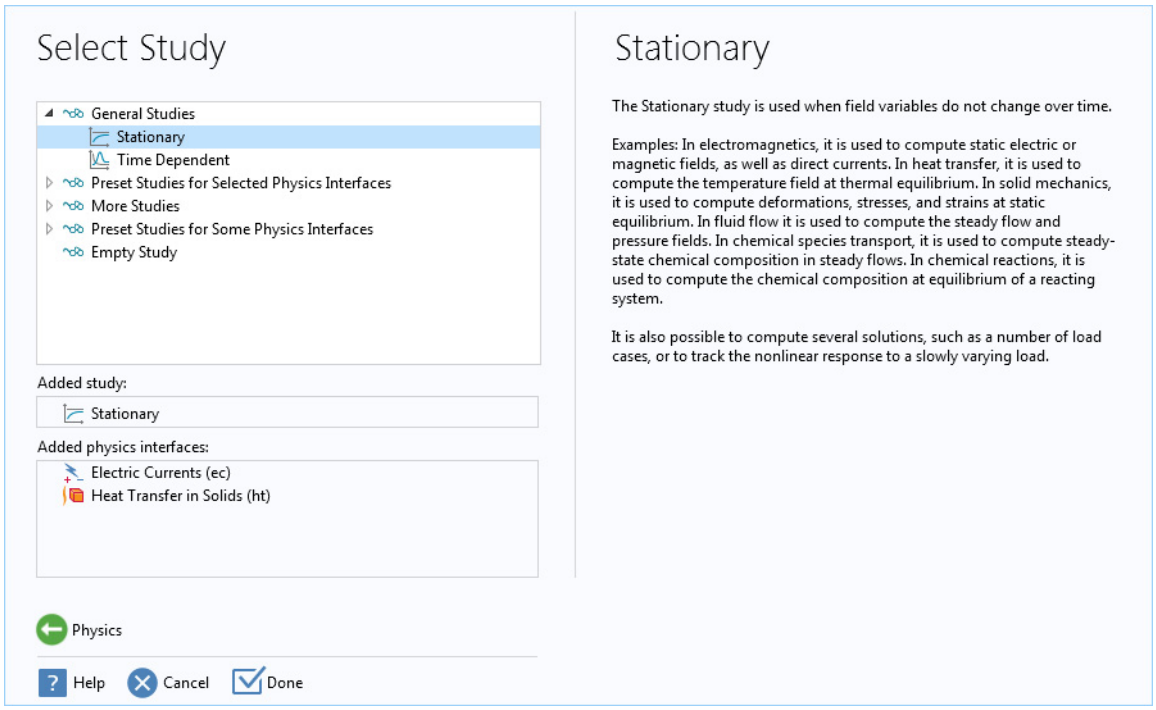

Figure 2-15: The Select Study page in the Model Wizard.

Once a study is highlighted, information about it displays to the right of the window and it is included under **Added study**. There are several options to continue.

ICON AND NAME	ACTION
Physics	Click to go back to the **Select Physics** and **Review Physics Interface** window.
Done	Click to exit the Model Wizard.
Cancel	Click to return to the **New** page of the Model Wizard.
Help	Click to open the context-based **Help** window.

Also add physics interfaces from the **Model Builder** and The Add Physics Window:

- In the **Home** toolbar, click the **Add Physics** button.
- By right-clicking the **Component** node and selecting **Add Physics**.

After clicking **Done**, the **Model Builder** window displays a model tree with a set of default nodes in the **Component** branches: **Definitions**, **Geometry**, **Materials**, **Mesh**, and nodes based on the physics interfaces selected (see Figure 2-16). The **Component** nodes and branches form the sequence of operations that define the model.

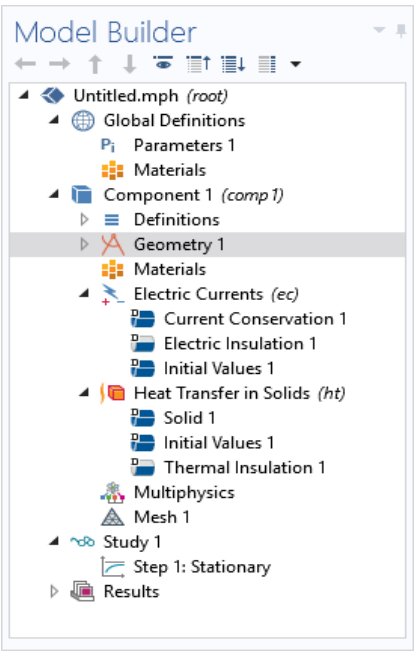

Figure 2-16: After clicking Done, a 3D Component with Electric Currents, Heat Transfer in Solids interfaces, and a Stationary study is added to the Model Builder.

	Also add a study from the **Model Builder** and The Add Study Window: • By right-clicking the **root** node and selecting **Add Study**. • In the **Home** toolbar, click the **Add Study** button.

	• Building a COMSOL Multiphysics Model • The Component Node • The Add Physics Window • The Add Study Window • The Model Builder

Toolbars and Keyboard Shortcuts

The toolbars and context menus in COMSOL Multiphysics are based on the stage of modeling. This section is a single resource for each of the ribbon and contextual toolbars available on the COMSOL Desktop. There are also several Keyboard Shortcuts that are useful for navigating during the modeling process. The following sections have a table where there are links to more information about the available items in the ribbon toolbar or contextual toolbar.

- Home Toolbar
- Definitions Toolbar
- Geometry Toolbar
- Sketch Toolbar
- Work Plane Modal Toolbar
- Materials Toolbar
- Physics Toolbar
- 0D Component Toolbar
- Mesh Toolbar
- Study Toolbar
- Results Toolbar
- Plot Group Contextual Toolbar
- Report Group Contextual Toolbar
- Template Group Contextual Toolbar
- View Toolbar
- Developer Toolbar

	About Changes to the Ribbon Display (Windows Users)

Home Toolbar

The **Home** ribbon toolbar (Windows) and the **Model Toolbar** (macOS and Linux) contains many of the common features and actions required to build and analyze a model.

	For step-by-step instructions and general documentation descriptions, this is the **Home** toolbar.

TABLE 2-6: THE HOME TOOLBAR

BUTTON OR MENU	NAME	DESCRIPTION OR OPTIONS	LINK TO MORE INFORMATION
Application A			
A	Application Builder (Ctrl+Shift+A)	Toggle between the Application Builder and Model Builder windows.	
Model			
	Component	Select any existing model component to move to that component. The name and icon indicates the current component and can therefore vary.	The Component Node
	Add Component	Add 3D, 2D, 2D Axisymmetric, 1D, 1D Axisymmetric, and 0D model components.	The Component Node

TABLE 2-6: THE HOME TOOLBAR

BUTTON OR MENU	NAME	DESCRIPTION OR OPTIONS	LINK TO MORE INFORMATION
Definitions			
P_i	Parameters	Add globally available Parameters to your model.	Global Definitions, Geometry, Mesh, and Materials and Parameters
a=	Variables	Choose from Global Variables and Local Variables.	Global Definitions, Geometry, Mesh, and Materials, Predefined and Built-In Variables
f(x)	Functions	Choose from a list of all available Functions	Functions
P_i	Parameter Case	Add a Parameter Case subnode to a Parameters node.	Parameter Cases
Geometry			
	Build All	Build all features in the current geometry.	Editing and Building Geometry Nodes The Geometry Node
	Import	Import the geometry from a COMSOL Multiphysics file or CAD file.	Import
	LiveLink	Choose to connect to a CAD software using a LiveLink connection that is included in your license.	See the documentation for the CAD LiveLink products.
Materials			
	Add Material	Open the Add Material window to add materials to components or selections.	The Add Material Window
Physics			
—	Various — the physics interface name	When physics interfaces are added, these are listed here and you can click to take you to the node in the Model Builder.	Physics Interface Guide
	Select Physics Interface	For a blank model this is available.	Selecting Physics Interfaces
	Add Physics	Open the Add Physics window to add physics interfaces to the current component.	The Add Physics Window
Mesh			
	Build Mesh	Build the current mesh.	Adding, Editing, and Building Meshing Sequences
	Select Mesh[1]	Available for a blank model.	Mesh Elements for 1D, 2D, and 3D Geometries
	Mesh[1]	When meshes are added, these are listed here and you can click to take you to the node in the Model Builder.	Creating a Mesh for Analysis
Study			
	Compute[1]	Compute the selected study.	Computing a Solution

TABLE 2-6: THE HOME TOOLBAR

BUTTON OR MENU	NAME	DESCRIPTION OR OPTIONS	LINK TO MORE INFORMATION
	Select Study[1]	Available for a blank model.	Open a New Window to Begin Modeling and The Add Study Window
	Study[1]	When studies are added, these are listed here and you can click to take you to the node in the Model Builder.	Introduction to Solvers and Studies
	Add Study[1]	Open the Add Study window to add a study to the current Component.	The Add Study Window
Results			
	Select Plot Group[1]	Available for a blank model.	About Plot Groups
—	Various —the name of the plot group[1]	Once results are available or plot groups are added, these are listed here and you can click to take you to the node in the Model Builder. It also opens a new Plot Group contextual toolbar for the plot group.	Plot Groups and Plots
	Add Plot Group[1]	3D Plot Group, 2D Plot Group, 1D Plot Group, Polar Plot Group, or Smith Plot Group.	About Plot Groups
Layout			
	Reset Desktop[2]	Reset the COMSOL Desktop to its default settings and choose Widescreen Layout or Regular Screen Layout.	Customizing the Desktop Layout
	Windows	Choose any of the available windows that you can add to the COMSOL Desktop. The Windows menu contains the windows on the following rows in this table.	
	Add Physics[2]	Open the Add Physics window to add physics interfaces to the current component.	Creating a New Model
	Add Multiphysics[2]	Open the Add Multiphysics window to add multiphysics couplings to the current component.	The Add Multiphysics Window
	Add Study[2]	Open the Add Study window to add a study to the current Component.	The Model Wizard
	Add Material from Library[2]	Open the Add Material window to add materials to components or selections from the material libraries.	The Add Material Window
	Material Browser[2]	Open the Material Browser where you can access and edit material libraries.	The Material Browser Window
	Application Libraries[2]	Open the Application Libraries window.	The Application Libraries Window
	Part Libraries[2]	Open the Part Libraries window where you can access collections of geometry parts.	Part Libraries
	Selection List[2]	Choose objects, for example, while working with complex geometries and when you need to easily locate a geometric entity that is not easily viewed.	The Selection List Window
	Properties[2]	The Properties window is accessed from the context menu and displays other node properties.	Settings and Properties Windows for Feature Nodes

TABLE 2-6: THE HOME TOOLBAR

BUTTON OR MENU	NAME	DESCRIPTION OR OPTIONS	LINK TO MORE INFORMATION
	Messages[2]	Contains information useful after an operation is performed.	The Messages Window
	Debug Log	Displays debug information for debugging code in methods.	See the *Application Builder Reference Manual*.
	Table[2]	Displays the results from integral and variable evaluations defined in Derived Values nodes or by Probes and stored in Table nodes.	The Table Window and Tables Node
	External Process[2]	Follow external processes (such as distributed batch jobs) that have been started. The window updates when you are attached to the external processes.	The External Process Window
	Recovery Files[2]	Manage and open recovery files.	Saving and Opening Recovery Files
	Comparison Results[2]	Comparison of Physics Builder files.	See the *Physics Builder Manual*.
	Physics Builder Manager[2]	Manage testing, compilation, and comparison of your Physics Builder files.	See the *Physics Builder Manual*.

[1] For cross-platform users (macOS and Linux), the combination of buttons that display is dependent on the toolbar setting. For example, some buttons may not be visible if the Tools>Toolbar Display Mode is set to Normal and the Tools>Toolbar Button Label is set to Show Icon and Text. It also depends on whether you are using a widescreen or regular screen layout.

[2] For cross-platform users (macOS and Linux), these options are available from other menus or toolbars. See Cross Platform (macOS and Linux) Toolbars and Menus.

Definitions Toolbar

The **Definitions** ribbon toolbar (Windows) and the **Definitions** contextual toolbar (macOS and Linux) contain many of the common features and actions required to work with features found under the Definitions node in the Model Builder.

	For step-by-step instructions and general documentation descriptions, this is the **Definitions** toolbar.

TABLE 2-7: THE DEFINITIONS TOOLBAR

BUTTON OR MENU	NAME	DESCRIPTION OR OPTIONS	LINK TO MORE INFORMATION
Variables			
a=	Local Variables	Add a Variables node under Definitions.	Global Definitions, Geometry, Mesh, and Materials, Predefined and Built-In Variables
	Variable Utilities	Add a variable utility such as a matrix variable under Definitions.	Variable Utilities
Functions			
f(x)	Analytic	Add an Analytic function node to define an analytic function.	Analytic

TABLE 2-7: THE DEFINITIONS TOOLBAR

BUTTON OR MENU	NAME	DESCRIPTION OR OPTIONS	LINK TO MORE INFORMATION
	Interpolation	Add an Interpolation function node to define an interpolation function.	Interpolation
	Piecewise	Add a Piecewise function node to define a piecewise function.	Piecewise
f(x)	More Functions	All available Functions (except Analytic, Interpolation, and Piecewise).	Functions
Selections			
	Explicit	Add an Explicit node under Definitions.	Creating Named Selections and Explicit
	Complement	Add a Complement node under Definitions.	Union, Intersection, Difference, and Complement
	Adjacent	Add an Adjacent node under Definitions.	Adjacent
	Ball/Disk	Add a Ball (3D) or Disk node under Definitions.	Ball, Disk
	Box	Add a Box node under Definitions.	Box
	Cylinder	Add a Cylinder node under Definitions.	Cylinder
	Union	Add a Union node under Definitions.	Union, Intersection, Difference, and Complement
	Intersection	Add an Intersection node under Definitions.	
	Difference	Add a Difference node under Definitions.	
	Colors	Add, reset, or remove colors for selections.	Selection Colors
Probes			
	Update Probes	Update all probes.	Probes
	Probes	Select an option from the list to add a node under Definitions Table 5-18.	
Physics Variables			
	Mass Properties	Add a Mass Properties node to the current model component.	Mass Properties
	Mass Contributions	Add a Mass Contributions node to the current model component (under **More Physics Variables**).	Mass Contributions
	Participation Factors	Add a Participation Factors node to the current model component (under **More Physics Variables**).	Participation Factors
	Response Spectrum	Add a Response Spectrum node to the current model component (under **More Physics Variables**).	Response Spectrum

TABLE 2-7: THE DEFINITIONS TOOLBAR

BUTTON OR MENU	NAME	DESCRIPTION OR OPTIONS	LINK TO MORE INFORMATION
Coupling			
	Nonlocal Couplings	Select an option from the list to add a node under Definitions.	Nonlocal Couplings and Coupling Operators
	Pairs	Select an option from the list to add a node under Definitions.	About Identity and Contact Pairs
Coordinate Systems			
	Coordinate Systems[1]	Select an option from the list to add a node under Definitions Table 5-17.	Coordinate Systems
	Perfectly Matched Layer[1]	Add a Perfectly Matched Layers node under Definitions.	Perfectly Matched Layer
	Infinite Element Domain[1]	Add an Infinite Element Domain node under Definitions.	Infinite Element Domain
	Absorbing Layer[1]	Add an Absorbing Layer node under Definitions.	Absorbing Layer
Deformed Mesh			
	Moving Mesh	Add moving mesh nodes under Definitions.	Moving Mesh Features
	Deformed Geometry	Add deformed geometry nodes under Definitions.	Deformed Geometry Features
Optimization			
	Optimization	Add optimization nodes.	See the documentation for the Optimization Module.
View			
	View[1]	Add a View node to the current Component to control the view and lighting in the Graphics window. 3D and 2D.	View (1D and 2D), View (3D), Axis (2D and 2D Axisymmetric) and Axis (1D and 1D Axisymmetric)

[1] For cross-platform users (macOS and Linux), the combination of buttons that display is dependent on the toolbar setting. For example, some buttons may not be visible if the Tools>Toolbar Display Mode is set to Normal and the Tools>Toolbar Button Label is set to Show Icon and Text. It also depends on whether you are using a Widescreen or Regular Screen Layout.

Geometry Toolbar

Once a geometry is added to the model, the **Geometry** ribbon toolbar (Windows) and the **Geometry** contextual toolbar (macOS and Linux) contains many of the common features and actions required to create and build a geometry.

For cross-platform users, some options listed in Table 2-8 are available from other toolbars and menus. Table 2-9 lists the geometry drawing tools available on the toolbars in 1D and 2D, as well as on the Work Plane toolbar for 3D models. See Cross Platform (macOS and Linux) Toolbars and Menus.

	For step-by-step instructions and general documentation descriptions, this is the **Geometry** toolbar.

TABLE 2-8: THE GEOMETRY TOOLBARS

BUTTON OR MENU	NAME	DESCRIPTION OR OPTIONS
Build		
	Build All[2]	Build all features in the current geometry. See Editing and Building Geometry Nodes.
Import/Export		
	Import[2]	Import the geometry from a COMSOL Multiphysics file or CAD file.
	Insert Sequence	Insert a geometry sequence from a COMSOL Multiphysics file into the current geometry. See Inserting a Sequence.
	Export	Export the current geometry as a COMSOL binary or text file or to a CAD file format. See Exporting a Geometry.
Cleanup		
	Defeaturing and Repair[1,3]	Choose from Cap Faces, Delete Fillets, Delete Short Edges, Delete Sliver Faces, Delete Small Faces, Delete Spikes, Delete Faces, Detach Faces, Knit to Solid, and Repair.
	Remove Details	Remove small details from 3D geometries. See Remove Details.
	Virtual Operations[1]	Virtual geometry operations and mesh control operations. See Virtual Geometry Operations and Virtual Geometry and Mesh Control Operations.
Sketch (2D)		
	Sketch	Toggle the sketch visualization on or off. See The Sketch Visualization.
Primitives (3D)		
	Block	Add a Block to the current geometry.
	Cone	Add a Cone to the current geometry.
	Cylinder	Add a Cylinder to the current geometry.
	Sphere	Add a Sphere to the current geometry.
	Torus	Add a Torus to the current geometry.
	Helix	Add a Helix to the current geometry.
	More Primitives	Add all other 3D primitives as in Table 7-3 and Geometric Primitives. Also see the geometry parts available in the Part Libraries.
Primitives (2D)		
	Circle	Add a Circle to the current geometry.
	Ellipse	Add an Ellipse to the current geometry.
	Rectangle	Add a Rectangle to the current geometry.
	Square	Add a Square to the current geometry.
	Polygon	Add a Polygon to the current geometry.

TABLE 2-8: THE GEOMETRY TOOLBARS

BUTTON OR MENU	NAME	DESCRIPTION OR OPTIONS
	Point	Add a Point to the current geometry.
	More Primitives	Add all other 2D primitives as in Table 7-3 and Geometric Primitives. Also see The 1D Geometry Toolbar — Drawing Tools (Table 2-9) and the geometry parts available in the Part Libraries.
Primitives (1D)		
	Interval	Draw an interval (line) in the Graphics window. For 1D models, first click the Interval button, then click the starting point and endpoint in the Graphics window. Also see Geometric Primitives and The 1D Geometry Toolbar — Drawing Tools (Table 2-9).
	Point	Add a point to the Graphics window. Use this to draw a single point. First click the Point button, then click in the Graphics window (in 1D and 2D), or specify the point location in its Settings window. In 2D and 3D, this button is available on the More Primitives menu.
Work Plane		
	Select Work Plane	Once Work Planes are available or added, these are listed here and you can click to take you to the associated Plane Geometry node in the Model Builder. It also opens a new Work Plane contextual toolbar for the Work Plane. See Using Work Planes, Work Plane Modal Toolbar and Table 2-9.
	Work Plane	Add a Work Plane to the current geometry. See Using Work Planes, Work Plane Modal Toolbar and Table 2-9.
Operations		
	Extrude	Extrude planar faces of geometry objects or objects from a work plane to create 3D geometry objects.
	Revolve	Revolve planar faces of geometry objects or objects from a work plane about an axis to create 3D geometry objects.
	Sweep	Sweep faces along a spine curve to create a solid object.
	Loft	Requires the Design Module. Lofting planar sections along a path.
	Booleans and Partitions	Create a geometry object using Boolean operations: Union, Intersection, Difference, and Compose. Partition geometry objects into parts using other geometry objects as tool objects for the partition. Alternatively, in 3D, use a work plane to partition the geometry objects. Select Partition Objects or Partition Edges.
	Transforms	This menu has these operations available: Array, Copy, Mirror, Move, Rotate[1], Scale[1]
	Conversions[1]	See Table 7-8 for a list of these features. Also see Conversion Operations.
	Chamfer[1]	Chamfer corners in 2D geometry objects. Also in 3D with the Design Module.
	Fillet[1]	Fillet corners in 2D geometry objects. Also in 3D with the Design Module.
	Tangent	Add a line segment that is tangent to a given edge in 2D geometries.
	Delete[1]	Delete the selected geometry objects. See Clearing Sequences and Deleting Sequences or Nodes.

TABLE 2-8: THE GEOMETRY TOOLBARS

BUTTON OR MENU	NAME	DESCRIPTION OR OPTIONS
	Edit Object	Adjust edges and vertices for 2D geometry objects or add or delete edges and vertices in the object.
	Cross Section	Create 2D cross sections from 3D geometries.
Other		
	Parts	3D, 2D, and 1D Parts, Load Part, and Part Instances. See Part Libraries, Using Geometry Parts, and Part Instance.
	Programming[1]	If + End If and Parameter Check. From the Add Before and Add After menus: If, Else If, Else, and End If. See If, Else If, Else, End If, and Parameter Check.
	Selections[1]	Create named selections of geometry objects or geometric entities in geometry objects. See Creating Named Selections in the Geometry Sequence.
	Colors[1]	Add coloring to highlight named selections in the Graphics window. See Selection Colors.
	Measure[1]	Measure the volume, area, perimeter, or other geometric properties of the selected geometric entities or objects. See Measuring Geometry Objects.
	Delete Sequence[1]	Delete a geometry sequence. See Clearing Sequences and Deleting Sequences or Nodes.

[1] For cross-platform users (macOS and Linux), the combination of buttons that display is dependent on the toolbar setting. For example, some buttons may not be visible if the Tools>Toolbar Display Mode is set to Normal and the Tools>Toolbar Button Label is set to Show Icon and Text. It also depends on whether you are using a Widescreen or Regular Screen Layout. It also depends if the button is available on the Work Plane toolbar, in which case it may be visible.

[2] For cross-platform users, this option is available from a different toolbar or menu. See Cross Platform (macOS and Linux) Toolbars and Menus.

[3] These features are available for the LiveLink and CAD products, and you must use the CAD kernel for the geometry representation.

GEOMETRY DRAWING TOOLBAR BUTTONS

In 1D, there are buttons for drawing Geometric Primitives by using the mouse. In 2D, the Sketch Toolbar provides tools for drawing 2D geometric primitives. In 3D, the buttons are available to create primitives, but you cannot draw these using the mouse unless you are using a Work Plane.

TABLE 2-9: THE 1D GEOMETRY TOOLBAR — DRAWING TOOLS

BUTTON OR MENU	NAME	DESCRIPTION OR ACTION
Draw Settings		
	Snap to Grid	Snap to the grid when drawing a geometry object in the Graphics window. By default, the mouse pointer snaps to the grid points. The active grid point for the snapping is indicated with a red circle. To disable snapping to the grid, click the Snap to Grid button.
	Snap to Geometry	Snap to the vertices of other geometry objects when drawing a geometry object in the Graphics window. By default, the mouse pointer snaps to the geometry vertices. The active point for the snapping is indicated with a red circle. To disable snapping to the geometry objects, click the Snap to Geometry button.

TABLE 2-9: THE 1D GEOMETRY TOOLBAR — DRAWING TOOLS

BUTTON OR MENU	NAME	DESCRIPTION OR ACTION
Draw		
	Interval	Draw an Interval (line) in the Graphics window. For 1D models, first click the Interval button, then click the starting point and endpoint in the Graphics window.
	Point	Add a Point to the Graphics window. Use this to draw a single point. First click the Point button, then click in the Graphics window (in 1D and 2D), or specify the point location in its Settings window. In 2D and 3D, this button is available on the More Primitives menu.

Sketch Toolbar

Use the Sketch toolbar to draw in the graphics window for a 2D geometry or part, or in a work plane for a 3D geometry. If you have the Design Module, the Sketch toolbar also contains buttons for creating geometric constraints and dimensions (see the Design Module documentation for more information)..

TABLE 2-10: THE SKETCH TOOLBAR

BUTTON OR MENU	NAME	DESCRIPTION OR ACTION
Sketch		
	Sketch	Toggle the sketch visualization on or off. See The Sketch Visualization.
Draw Settings		
	Snap to Grid	Snap vertices and edges to the grid when drawing or dragging a vertex in the Graphics window. The snapped cursor position is indicated with a blue circle.
	Snap to Geometry	Snap vertices and edges to vertices and edges when drawing or dragging a vertex in the Graphics window. The vertex or edge snapped to is highlighted in turquoise. There can also be a green line or circle segment between the snapped entities. If you have the Design Module and you have enabled **Use constraints and dimensions** in the Geometry node's settings: When snapping occurs, a constraint feature will be generated in some cases, so that the snapping will persist when you modify your geometry.
	Solid	Create a solid object (instead of a curve object) when drawing a closed curve in the Graphics window.
Draw		
	Polygon	Draw a sequence of line segments in the Graphics window. Click the points of the polygon. Then right-click anywhere to finish, or click another curve drawing button to create a Composite Curve.
	Circular Arc	Draw a sequence of circular arcs in the Graphics window in one of the following ways: • Click the **Circular Arc** button or choose the menu item **Start, Center, Angle**. Then click the starting point, the center, and the direction of the end angle. • Choose the **Start, Tangent, End** menu item. Then click the starting point, the direction of the tangent line at the starting point, and the endpoint. • Choose the **Start, Tangent, End** menu item. Then click the starting point, the direction of the tangent line at the starting point, and the endpoint.

TABLE 2-10: THE SKETCH TOOLBAR

BUTTON OR MENU	NAME	DESCRIPTION OR ACTION
	Interpolation Curve	Draw a cubic spline curve that interpolates given points in the Graphics window, in one of the following ways: • Click the **Interpolation Curve** button or choose the **Interpolation Points** menu item. Then click a sequence of points to interpolate. • Choose the **Start, Tangent, Other** menu item. Then click the starting point, the direction of the tangent line at the starting point, and the other interpolation points. Finally, right-click anywhere to finish, or click another curve drawing button to create a Composite Curve.
	Quadratic	Draw a sequence of quadratic Bézier curve segments in the Graphics window. Click the three control points to create one Bézier segment. A Quadratic Bézier node is then added. Optionally, click an even number of additional control points to create several Bézier segments. Finally, right-click anywhere to finish, or click another curve drawing button to create a Composite Curve that contains **Quadratic Bézier** nodes corresponding to each Bézier segment.
	Cubic	Draw a sequence of cubic Bézier curve segments in the Graphics window. Click the four control points to create one Bézier segment. A Cubic Bézier node is then added. Optionally, click additional control points to create several Bézier segments. Finally, right-click anywhere to finish, or click another curve drawing button to create a Composite Curve that contains **Cubic Bézier** nodes corresponding to each Bézier segment.
	Point	Draw a point in the Graphics window. After clicking the button, click the point in the Graphics window.
	Rectangle	Draw a rectangle or square in the Graphics window in one of the following ways: • Click the Rectangle button or choose the **Rectangle** menu item. Then click two opposite corners of the rectangle. • Choose the Square menu item. Then click one corner. Move the mouse to adjust the size of the square. Click to finish. • Choose the **Rectangle (Center)** menu item. Then click the center and one corner. • Choose the **Square (Center)** menu item. Then click the center. Move the mouse to adjust the size of the square. Click to finish.
	Circle	Draw a circle or ellipse in the Graphics window in one of the following ways: • Click the Circle button or choose the **Circle** menu item. Then click the center. Move the mouse to adjust the size of the circle. Click to finish. • Choose the Ellipse menu item. Then click the center. Move the mouse to adjust the axes of the ellipse. Click to finish. • Choose the **Circle (Corner)** menu item. Then click one corner of the circumscribed square of the circle. Move the mouse to adjust the size of the circumscribed square. Click to finish. • Choose the **Ellipse (Corner)** menu item. Then click one corner of the circumscribed rectangle of the ellipse. Move the mouse to adjust the size of the circumscribed rectangle. Click to finish.

TABLE 2-10: THE SKETCH TOOLBAR

BUTTON OR MENU	NAME	DESCRIPTION OR ACTION
Operations		
	Composite Curves	Create a Composite Curve feature that has a sequence of child features of type Polygon, Circular Arc, Interpolation Curve, Quadratic Bézier, and Cubic Bézier. First select at least one edge from each curve object to include in the Composite Curve in the Graphics window. These objects must be of one of the following types: Polygon, Circular Arc, Interpolation Curve, Quadratic Bézier, Cubic Bézier, or Composite Curve. The curve objects must form a single connected chain. Then click the **Compose Curves** button. The original curve features will be replaced with a **Composite Curve** feature or a **Polygon** feature in the Model Builder.
	Delete	Delete the selected vertices and edges. Select some vertices and edges in the Graphics window. Then click the **Delete** button or press the Del key. This will delete the selected entities using a combination of the following methods: • Removing geometry features from the Model Builder • Removing points from Polygon features • Splitting Polygon and Composite Curve features into several features • Adding Delete Entities features This operation does not delete selected vertices that are adjacent to an edge that is not selected. If you have the Design Module, you can also select symbols for constraint and dimension features and then delete them by clicking **Delete** or pressing Del.

Work Plane Modal Toolbar

The **Work Plane** modal toolbar is available after clicking Plane Geometry under **Geometry>Work Plane** in the Model Builder.

	For step-by-step instructions and general documentation descriptions, this is the **Work Plane** modal toolbar.

	The Work Plane toolbar is similar to the 2D Geometry Toolbar except that the **Virtual Operations** menu is not available and there is a **Close** button.

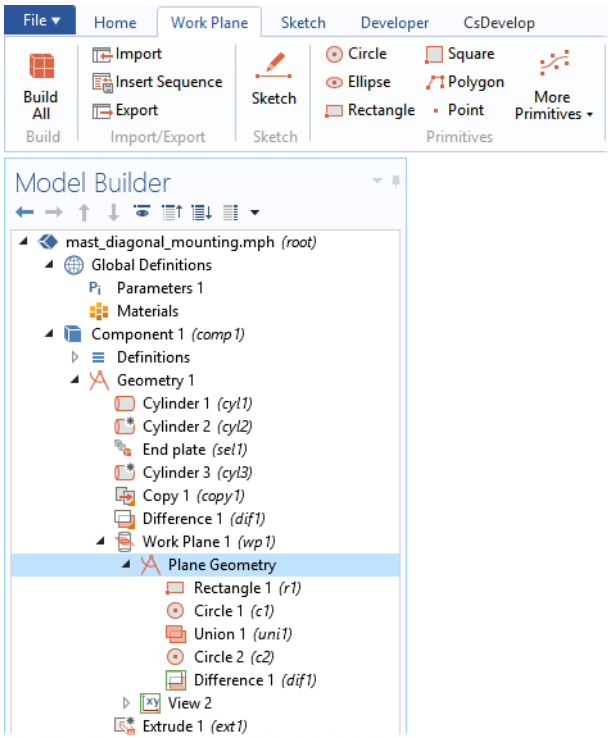

Figure 2-17: Click the Plane Geometry node to open the Work Plane toolbar.

Materials Toolbar

Once physics interfaces are added to the model, the **Materials** ribbon toolbar (Windows) and the **Materials** contextual toolbar (macOS and Linux) contains many of the common features and actions required to work with the features found under the **Materials** node in the Model Builder.

	For step-by-step instructions and general documentation descriptions, this is the **Materials** toolbar.

TABLE 2-11: THE MATERIALS TOOLBAR

BUTTON OR MENU	NAME	DESCRIPTION OR OPTIONS	LINK TO MORE INFORMATION
Materials			
	Add Material	Open the Add Material window to add materials to components or selections.	The Add Material Window
	Blank Material	Add a blank material to your model.	Materials and The Settings Window for Material
	Browse Materials	Open the Material Browser where you can access and edit material libraries.	The Material Browser Window
	More Materials	Add a Material Link, a Material Switch, or an External Material.	Material Link, Switch for Materials, and Working with External Materials

TABLE 2-11: THE MATERIALS TOOLBAR

BUTTON OR MENU	NAME	DESCRIPTION OR OPTIONS	LINK TO MORE INFORMATION
Property Groups			
	Analytic	Add an Analytic function node to define an analytic function.	Analytic and Using Functions in Materials
	Interpolation	Add an Interpolation function node to define an interpolation function.	Interpolation and Using Functions in Materials
	Piecewise	Add a Piecewise function node to define a piecewise function.	Piecewise and Using Functions in Materials
	User-Defined Property Group	Add a user-defined property group to current material.	Property Groups
User-Defined Libraries			
	Add to Library	Add a material to a user-defined material library.	User-Defined Materials and Libraries

Physics Toolbar

Once physics interfaces are added to the model, the **Physics** ribbon toolbar (Windows) and the **Physics** contextual toolbar (macOS and Linux) contains many of the common features and actions required to add physics interfaces and features to the Model Builder.

	For interfaces available in 0D, see 0D Component Toolbar.

	For step-by-step instructions and general documentation descriptions, this is the **Physics** toolbar.

TABLE 2-12: THE PHYSICS TOOLBAR

BUTTON OR MENU	NAME	DESCRIPTION OR OPTIONS	LINK TO MORE INFORMATION
Physics			
—	Various - the physics interface name	Any physics interfaces added to the selected Component are listed. Click to go to the node in the Model Builder and open the Settings window. See Physics Interface Guide.	The Physics Interfaces
	Add Physics	Open the Add Physics window to add physics interfaces to the current component.	The Add Physics Window
	Add Multiphysics	Open the Add Multiphysics window to add applicable multiphysics couplings to the current component.	The Add Multiphysics Window
	Insert Physics from Model	Open the Insert Physics dialog box to insert physics interfaces in the current model component from another model file.	Adding and Inserting Physics Interfaces

TABLE 2-12: THE PHYSICS TOOLBAR

BUTTON OR MENU	NAME	DESCRIPTION OR OPTIONS	LINK TO MORE INFORMATION
Geometric Entity			
	Domains	See Table 3-3 for a list of all the icons by space dimension. Available physics features for the physics interface are listed. To add subnodes, however, you need to right-click the parent node. For example, to add a Destination Selection subnode, right-click Periodic Condition.	About Geometric Entities About Selecting Geometric Entities
	Boundaries		
	Pairs		
	Edges		
	Points		
	Global		
Contextual			
—	Attributes	Subnodes that can be added to a main (parent) node. 0D, 1D, 2D, and 3D	For example, Destination Selection (a subnode to Periodic Condition) or Damping (a subnode to Linear Elastic Material). When available, Harmonic Perturbation is added from this menu as an exclusive node. See Harmonic Perturbation — Exclusive and Contributing Nodes
	Load Group	After adding a Load Group to the Global Definitions branch you can activate it in one or more load cases.	Using Load Cases
	Constraint Group	After adding a Constraint Group to the Global Definitions branch you can activate it in one or more load cases.	
	Harmonic Perturbation	Click this to add Harmonic Perturbation as a contributing node.	Harmonic Perturbation — Exclusive and Contributing Nodes
Multiphysics			
	Multiphysics Couplings	This menu contains any physics features that provide multiphysics couplings likely to be used for the set of physics interfaces added to the Model Builder.	Multiphysics Modeling Workflow and The Multiphysics Branch

0D Component Toolbar

Once a 0D component interface is added to the model, a toolbar with the same name as the physics interface displays in the ribbon (Windows) and the contextual toolbar (macOS and Linux).

	For step-by-step instructions and general documentation descriptions, the name of the toolbar is the same as the physics interface it is attached to.

These toolbars are documented for the interfaces in the applicable module documentation.

AVAILABLE WITH A COMSOL MULTIPHYSICS LICENSE:

- Global ODEs and DAEs. See The Global ODEs and DAEs Interface.
- Events. See The Events Interface.
- Sensitivity. See The Sensitivity Interface.

AVAILABLE WITH THE ADDITION OF VARIOUS LICENSES:

- Reaction Engineering
- Chemistry
- Optimization

Mesh Toolbar

Once a mesh is added to the model, the **Mesh** ribbon toolbar (Windows) and the **Mesh** contextual toolbar (macOS and Linux) contains many of the common features and actions required to work with meshes.

TABLE 2-13: THE MESH TOOLBAR

BUTTON OR MENU	NAME	DESCRIPTION OR OPTIONS	LINK TO MORE INFORMATION
Build			
	Build Mesh[2]	Build the current mesh.	Adding, Editing, and Building Meshing Sequences
	Mesh (1, 2, 3,...)	Lists the meshes available in the model. Click a Mesh button to go to the node in the Model Builder.	Creating a Mesh for Analysis
	Add Mesh	Add a new mesh to the current model component.	Adding, Editing, and Building Meshing Sequences
Physics Controlled			
	Edit	Edit the physics-controlled sequence.	Physics-Controlled Mesh
	Reset	Reset the sequence to the physics-controlled settings.	
	Mesh Size (Normal is the default)	See Table 8-1 for a list of options.	The Mesh Toolbar (Predefined Mesh Element Sizes) Mesh Element Quality and Size
Generators			
	Free Tetrahedral	Generate unstructured tetrahedral mesh for 3D components.	Free Tetrahedral
	Swept	Generate swept mesh for 3D components.	Swept
	Boundary	The following are available from this menu: Free Triangular, Free Quad, Mapped, and Edge.	
	Boundary Layers	Generate boundary layer mesh.	Boundary Layers
Operations			
	Modify	Size: Distribution and Corner Refinement Elements: Convert and Refine Mesh: Reference and Scale	Meshing Operations and Attributes and Mesh Attributes

TABLE 2-13: THE MESH TOOLBAR

BUTTON OR MENU	NAME	DESCRIPTION OR OPTIONS	LINK TO MORE INFORMATION
	Copy	Copy Domain, Copy Edge, Copy Face, and Copy.	Meshing Operations and Attributes
Attributes			
	Mesh Size (Normal is the default)	See Table 8-1 for a list of options.	The Mesh Toolbar (Predefined Mesh Element Sizes) Mesh Element Quality and Size
	Distribution	Add a Distribution node under the selected node to specify an element distribution.	Mesh Attributes
	More Attributes	See Mesh Attributes.	
Import/Export			
	Import	Import mesh.	Importing Meshes
	Partition Entities	Create geometric entities by partitioning the mesh. Ball, Box, Cylinder, Logical Expression, and Detect Faces.	Using Operations on an Imported Mesh
	Create Entities	Create mesh vertices, edges, faces, and domains, and fill holes in imported meshes.	Using Operations on an Imported Mesh
	Delete Entities	Delete geometric entities.	Using Operations on an Imported Mesh
	Join Entities	Join adjacent geometric entities.	Using Operations on an Imported Mesh
	Export	Export mesh.	Exporting Meshes
	Create Part	Create a Mesh Part node, under which you import a mesh and prepare it for use in a component.	Using Mesh Parts
	Create Geometry from Mesh	Create a new model component with a geometry created from the mesh.	Creating Geometry from Mesh
Evaluate			
	Measure	Measure the volume, area, perimeter, or other geometric properties of the selected geometry objects.	Measuring Geometry Objects
	Statistics	Write information about number and quality of elements to the Messages window.	The Mesh Statistics Window
	Plot	Add a mesh plot.	Mesh (Plot)
Clear			
	Clear Mesh[1]	Clear the mesh.	Clearing Sequences and Deleting Sequences or Nodes
	Clear All Meshes[1]	Clear all meshes in the model.	

TABLE 2-13: THE MESH TOOLBAR

BUTTON OR MENU	NAME	DESCRIPTION OR OPTIONS	LINK TO MORE INFORMATION
	Delete Sequence[1]	Delete a meshing sequence.	Clearing Sequences and Deleting Sequences or Nodes

[1] For cross-platform users (macOS and Linux), the combination of buttons that display is dependent on the toolbar setting. For example, some buttons may not be visible if the Tools>Toolbar Display Mode is set to Normal and the Tools>Toolbar Button Label is set to Show Icon and Text. It also depends on whether you are using a Widescreen or Regular Screen Layout.

[2] For cross-platform users, this option is available from a different toolbar or menu. See Cross Platform (macOS and Linux) Toolbars and Menus.

Study Toolbar

The **Study** ribbon toolbar (Windows) and the **Study** contextual toolbar (macOS and Linux) contains many of the common features and actions required to work with studies and solvers.

	For step-by-step instructions and general documentation descriptions, this is the **Study** toolbar.

TABLE 2-14: THE STUDY TOOLBAR

BUTTON OR MENU	NAME	OPTIONS DESCRIPTION OR OPTIONS	LINK TO MORE INFORMATION
Study			
	Compute[1]	Compute the selected study.	Computing a Solution
	Select Study[1]	See a list of all available studies in Table 20-2.	Study and Study Step Types
	Add Study[1]	Open the Add Study window to add a study to the current model component.	The Add Study Window
	Continue	Continue the computation of a solver sequence from the last computed feature.	The Progress Window
	Update Solution	Update the solution using the current values of parameters and user-defined variables.	Updating a Solution
	Get Initial Value	Generate a solution using the initial values of the dependent variables (without solving for the dependent variables).	Computing the Initial Values
Solver			
	Show Default Solver	Display the nodes in the solver sequences that are created by default.	Show Default Solver
Study Step			
	Study Steps	See lists of all available study types and study steps in Table 20-2 and Table 20-3.	The Add Study Window and The Relationship Between Study Steps and Solver Configurations
	Parametric Sweep	Choose Parametric Sweep or Optimization, for example.	Study Extension Steps and Advanced Study Extension Steps
f(x)	Function Sweep	Run a function sweep, switching between different user-defined functions.	Function Sweep

TABLE 2-14: THE STUDY TOOLBAR

BUTTON OR MENU	NAME	OPTIONS DESCRIPTION OR OPTIONS	LINK TO MORE INFORMATION
	Material Sweep	Run a material sweep, switching between different materials.	Material Sweep
	Combine Solutions	Combine solutions using concatenation or summation, or by removing solutions.	Combine Solutions
	Study Reference	Add a study step that refers to another study.	Study Reference
	Optimization	Perform an optimization study. This is available with the addition of the Optimization Module.	See the *Optimization Module User's Guide*.
	Parameter Estimation	Perform a parameter estimation study. This is available with the addition of the Optimization Module.	See the *Optimization Module User's Guide*.
	Sensitivity	Add a Sensitivity study step.	Sensitivity
	Model Reduction	Add a Model Reduction study step.	Model Reduction
Batch & Cluster			
	Batch	Add a Batch or Batch Sweep study node	Batch and Batch Sweep
	Cluster	Add a Cluster Computing or Cluster Sweep study node	Cluster Computing and Cluster Sweep
Operations			
	Create Solution Copy	Make a copy of a solution.	Solution Operation Nodes and Solvers
Evaluate			
	Statistics	Display statistics for the study, including the number of degrees of freedom (DOFs).	The Statistics Page
Clear			
	Clear Solutions	Clear the solutions in the current solver sequence.	Clearing Sequences and Deleting Sequences or Nodes
	Clear All Solutions	Clear all solutions.	

[1] For cross-platform users, this option is available from a different toolbar or menu. See Cross Platform (macOS and Linux) Toolbars and Menus.

Results Toolbar

The **Results** ribbon toolbar (Windows) and the **Results** contextual toolbar (macOS and Linux) contains many of the common features and actions required to work with studies and solvers.

	For step-by-step instructions and general documentation descriptions, this is the **Results** toolbar.

TABLE 2-15: THE RESULTS TOOLBAR

BUTTON OR MENU	NAME	DESCRIPTION OR OPTIONS	LINK TO MORE INFORMATION
Plot Group			
	Plot	Plot the selected plot group.	Plot Groups and Plots. Also see Plot Group Contextual Toolbar.
—	Select Plot Group	Choose from a list of plots included in the model.	About Plot Groups. Also see Plot Group Contextual Toolbar.
	3D Plot Group	Create a new 3D Plot Group for 3D plots such as volume and slice plots.	
	2D Plot Group	Create a new 2D Plot Group for 2D plots such as surface and contour plots.	
	1D Plot Group	Create a new 1D Plot Group for 1D graph plots.	
	Polar Plot Group	Create a new Polar Plot Group for graph plots in a polar coordinate system.	
Definitions			
	Parameters	Add a Parameters node under Results for defining results parameters.	Parameters
Dataset			
	Cut Plane	Create a Cut Plane dataset for data on a plane in 3D.	Cut Plane
	Cut Line 3D	Create a 3D Cut Line dataset for data along a line in 3D.	Cut Line 2D and Cut Line 3D
	Cut Point 3D	Create a 3D Cut Point dataset for data at a point in 3D.	Cut Point 1D, Cut Point 2D, and Cut Point 3D
	Cut Line 2D	Create a 2D Cut Line dataset for data along a line in 2D.	Cut Line 2D and Cut Line 3D
	Cut Point 2D	Create a 2D Cut Point dataset for data at a point in 2D.	Cut Point 1D, Cut Point 2D, and Cut Point 3D
	More Datasets	See Table 21-7 for a list of all datasets.	Datasets
	Selection (under **Attributes**)	Add a selection to the current dataset.	Adding a Selection to a Dataset and Creating Named Selections
	Remesh Deformed Configuration (under **Attributes**)	Create a deformed geometry from a current dataset.	Deformed Configuration
Numerical			
	Evaluate All	Evaluate all derived values and evaluation groups.	Table Window toolbar and Menu Options
	Clear and Evaluate All	Clear all current table entries and then evaluate all derived values and evaluation groups.	Table Window toolbar and Menu Options

TABLE 2-15: THE RESULTS TOOLBAR

BUTTON OR MENU	NAME	DESCRIPTION OR OPTIONS	LINK TO MORE INFORMATION
	Evaluation Group	Add an Evaluation Group node to evaluate derived values and present them in an Evaluation Group table.	About Evaluation Groups
	Point Evaluation	Add a Point Evaluation node to evaluate some expressions or variables at points.	Point Evaluation
	Global Evaluation	Add a Global Evaluation node to evaluate some global expressions or variables.	Global Evaluation
	More Derived Values	See Table 21-9 for a list of all derived value types.	Derived Values, Evaluation Groups, and Tables
	Table	Add a table.	Derived Values, Evaluation Groups, and Tables
Export			
	Data[1]	Data, Plot, Mesh (Export), Table	Exporting Data and Images
	Image[1]	Image	
	Animation	Animation or Player (see Animation) Create a movie to animate a solution (as an animated GIF, Flash, AVI, or WebM movie file, an image sequence, or as a player directly in the COMSOL Desktop Graphics window).	
Report			
	Report[1]	Choose a Brief Report, Intermediate Report, Complete Report, Custom Report, Documentation, or create or choose a custom report template.	Creating, Exporting, and Using Custom Report Templates
Clear			
	Clear Plot Data[1]	Clear all plot data that is stored in the model.	Saving Plot Data in the Model

[1] For cross-platform users (macOS and Linux), the combination of buttons that display is dependent on the toolbar setting. For example, some buttons may not be visible if the Tools>Toolbar Display Mode is set to Normal and the Tools>Toolbar Button Label is set to Show Icon and Text. It also depends on whether you are using a Widescreen or Regular Screen Layout.

Plot Group Contextual Toolbar

The plot group contextual toolbar is available after clicking a specific plot group in the Model Builder. The available tools are based on the model and the type of plot.

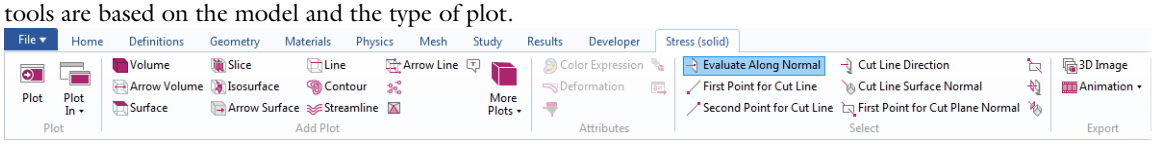

	For step-by-step instructions and general documentation descriptions, this is generally referred to as the **Plot Group** toolbar, where the name of the toolbar changes based on the plot group (3D Plot Group, 2D Plot Group, 1D Plot Group, or Polar Plot Group). If the plot group is renamed, the toolbar name also changes to match the new name, as in the example above where the **3D Plot Group** toolbar was renamed **Stress (solid)**.

TABLE 2-16: THE PLOT GROUP CONTEXTUAL TOOLBAR

BUTTON OR MENU	NAME	LINK TO MORE INFORMATION
Plot		
	Plot	Plot Groups and Plots
	Plot In New Window	The Plot Windows
Add Plot		
Various	See Table 21-10 for the available plots by Plot Group (3D, 2D, 1D, or Polar Plot Groups).	About Plot Groups
Attributes		
	Add a Color Expression to the currently selected plot.	Color Expression
	Add a Deformation to the currently selected plot.	Deformation
	Add a Filter to the currently selected plot.	Filter
	Add a Height Expression to the currently selected plot. This is for 2D plots.	Height Expression
Select (available for creating cross-section plots)		
Various	See Table 21-11 for a list of the available buttons.	Creating Cross-Section Plots and Combining Plots and Plotting and Cross-Section Interactive Toolbar
Export		
Various	See Table 21-12 for a list of export options.	Exporting Data and Images

Report Group Contextual Toolbar

The report group contextual toolbar is available after clicking a **Report** node in the Model Builder. It contains tools for creating a model report.

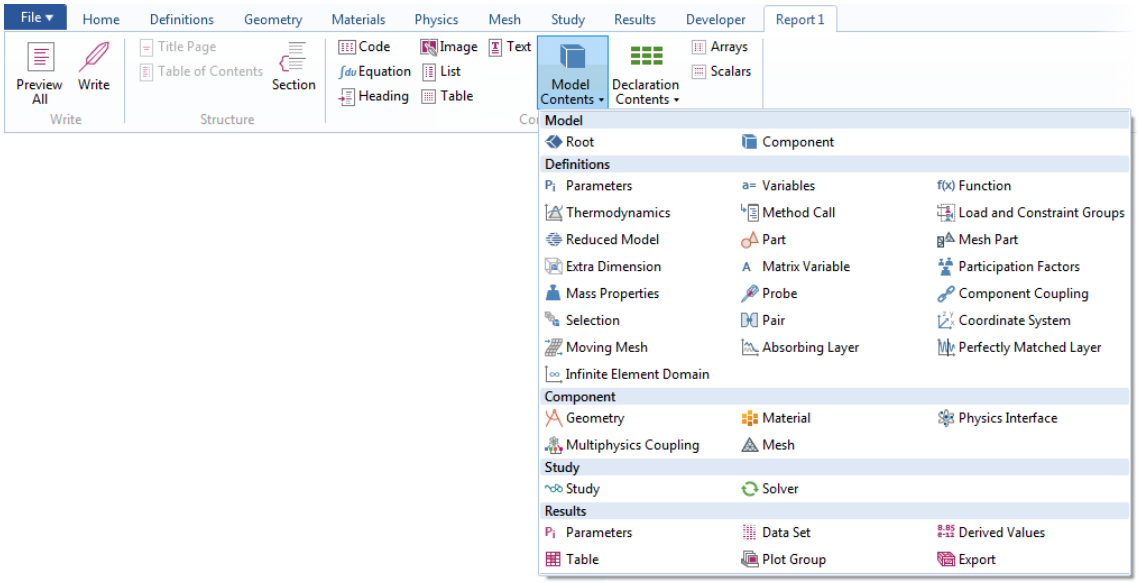

	For step-by-step instructions and general documentation descriptions, this is generally referred to as the **Report Group** toolbar, where the name of the toolbar name changes based on the report group. If the report group is renamed, the toolbar name also changes to match the new name.

TABLE 2-17: THE REPORT GROUP CONTEXTUAL TOOLBAR

BUTTON OR MENU	NAME	LINK TO MORE INFORMATION
Write		
	Generate	
	Preview All	The Report Node
	Write	
Structure		
	Title Page (available for custom reports)	The Title Page
	Table of Contents (available for custom reports)	The Table of Contents
	Section	Sections in the Report
Contents		
	Equation	Custom Report Components
	Heading	Custom Report Components
	Image	Custom Report Components

TABLE 2-17: THE REPORT GROUP CONTEXTUAL TOOLBAR

BUTTON OR MENU	NAME	LINK TO MORE INFORMATION
	List	Custom Report Components
	Table	Custom Report Components
	Text	Custom Report Components
	Model Contents	Model Contents — Report Components
	Declaration Contents	Declaration Contents
	Arrays	Arrays and Scalars
	Scalars	Arrays and Scalars

Template Group Contextual Toolbar

The template group contextual toolbar is available after clicking a **Template** node or its subnodes under **Reports** in the Model Builder. It includes tool for creating report templates.

TABLE 2-18: THE TEMPLATE GROUP CONTEXTUAL TOOLBAR

BUTTON OR MENU	NAME	LINK TO MORE INFORMATION
Export		
	Generate	
	Export	The Template Node
	Export All	
Structure		
	Title Page	The Title Page
	Table of Contents	The Table of Contents
	Section	Sections in the Report
Contents		
	Model Contents	Model Contents — Report Components

View Toolbar

Once physics interfaces are added to the model, the **View** ribbon toolbar (Windows) and the **View** contextual toolbar (macOS and Linux) contains many of the common features and actions required to work with the features found under the Materials node in the Model Builder.

	For step-by-step instructions and general documentation descriptions, this is the **View** toolbar.

TABLE 2-19: THE VIEW TOOLBAR

BUTTON OR MENU	NAME	DESCRIPTION OR OPTIONS	LINK TO MORE INFORMATION
Reset View			
	Reset to Default	Restore the default settings for the View node.	User-Defined Views
Lights (3D only)			
	Directional Light	Add a Directional Light to the View.	About the 3D View Light Sources and Attributes
	Point Light	Add a Point Light to the View.	
	Spotlight	Add a Spotlight to the View.	
	Headlight	Add a Headlight to the View.	
Hide			
	Hide	Add a selection feature to hide geometry objects or entities.	Hide for Geometry, Hide for Physics, Hide for Mesh Import

Developer Toolbar

For creating and running methods, adding method calls and settings forms to the Model Builder, and testing applications, the **Developer** ribbon toolbar is available in the Windows version. Some of the functionality is connected to the Application Builder and the creation and testing of applications, but you can also create model methods and method calls and run them for custom extensions of a model created in the Model Builder and also add custom settings form for custom settings to control the workflow in the Model Builder.

TABLE 2-20: THE DEVELOPER TOOLBAR

BUTTON OR MENU	NAME	DESCRIPTION OR OPTIONS	LINK TO MORE INFORMATION
Application A			
A	Application Builder (Ctrl+Shift+A)	Toggle between the Application Builder and Model Builder windows.	
	Data Access	Add data and properties that can be modified from a running application.	Data Access in the *Application Builder Reference Manual*.
	Test Application (Ctrl+F8)	Launch the application in a separate window.	Testing the Application in the *Application Builder Reference Manual*.
Create Methods			
	New Method	Create a new method with code to run in the model.	Creating and Running Methods in Models. Also see Creating Methods in the *Application Builder Reference Manual*.
	Record Method	Record changes to the embedded model to a new application method or model method.	Recording Code in the *Application Builder Reference Manual*.

TABLE 2-20: THE DEVELOPER TOOLBAR

BUTTON OR MENU	NAME	DESCRIPTION OR OPTIONS	LINK TO MORE INFORMATION
Method Calls			
	Method Call	Add any available model method as a method call in the Model Builder.	Method Calls
Run Methods			
	Run Method	Run one of the available methods.	Creating and Running Methods in Models
	Run Method Call	Run one of the added method calls.	
	Stop	Stop a running method.	
Forms			
	Settings Form	Add a form as a Settings window in the Model Builder.	Creating and Using Settings Forms and Dialogs
	Update Forms	Update forms in the Model Builder	
	Show Dialog	Show the form as a dialog box.	
Add-ins			
	Add-ins	Add an add-in as a Settings window in the Model Builder.	Creating Add-ins
	Add-in Libraries	Open the Add-In Libraries window.	
	Refresh Add-ins	Refresh the available add-ins in the Model Builder.	
	Clear Add-ins	Clear all imported add-ins in the Model Builder.	
Compare			
	Compare	Compare the current model and application with another MPH-file on the file system and then open the Comparison Result window.	Comparing Models and Applications

Keyboard Shortcuts

The following table summarizes the available keyboard shortcuts on Windows and Linux and on macOS (see also Keyboard Shortcuts for the Quick Access Toolbar and the Application Builder documentation for specific keyboard shortcuts):

SHORTCUT (WINDOWS, LINUX)	SHORTCUT (MACOS	ACTION
F1	F1	Display help for the selected node or window.
Ctrl+F1	Command+F1	Open the COMSOL Documentation front page in an external Help window.
F2	F2	Rename the selected node, file, or folder.
F3	F3	Disable selected nodes.
F4	F4	Enable selected nodes.

SHORTCUT (WINDOWS, LINUX)	SHORTCUT (MACOS	ACTION
F5	F5	Update solution with respect to new definitions without re-solving the model. Update reduced model data. Also, on Windows, to continue in the Method Editor's debugging tool in the Application Builder.
F6	F6	Build the preceding node in the Geometry branch or plot the previous plot for a time-dependent, eigenfrequency, or eigenvalue solution. Also, on Windows, to step in the Method Editor's debugging tool in the Application Builder,
F7	F7	Build the selected node in the geometry and mesh branches, compute the selected study step, compute to the selected node in the solver sequence, or plot the next plot for a time-dependent, eigenfrequency, or eigenvalue solution. Also, on Windows, to step into in the Method Editor's debugging tool in the Application Builder.
F8	F8	Build the geometry, build the mesh, compute entire solver sequence, update results data, update the plot, or run model method in a method call. Also, on Windows, to create an executable or an add-in in the Application Builder.
F9		On Windows, check syntax for a method in the Application Builder.
Del	Del	Delete selected nodes and selected geometry objects.
Left arrow (Windows); Shift + left arrow (Linux)	Left arrow	If you are at the top of a branch, pressing this collapses this branch in the Model Builder. Continue pressing the left arrow key to move upward in the tree to collapse all branches. If within a subbranch, pressing the left arrow key repositions you to the beginning of the branch.
Right arrow (Windows); Shift + right arrow (Linux)	Right arrow	Expand a branch in the Model Builder.
Up arrow	Up arrow	Move to the node above in the Model Builder. Highlight the next entity for a 3D geometry in the Graphics window when it has focus.
Down arrow	Down arrow	Move to the node below in the Model Builder. Highlight the previous entity for a 3D geometry in the Graphics window when it has focus.
Alt+left arrow	Ctrl+left arrow	Move to the previously selected node in the Model Builder.
Alt+right arrow	Ctrl+right arrow	Move to the next selected node in the Model Builder.
Ctrl+A	Command+A	Select all domains, boundaries, edges, or points; select all cells in a table or all contents of a table cell.
Ctrl+C	Command+C	Copy text in fields. Copy images in graphics and plot windows.
Ctrl+D	Command+D	Clear the selection of all domains, boundaries, edges, or points in the Model Builder. Clear all selections in form editor windows.
Ctrl+Shift+D	Command+Shift+D	Duplicate the selected node in the Model Builder.
Ctrl+F	Command+F	Find a search string in a model or application method.

SHORTCUT (WINDOWS, LINUX)	SHORTCUT (MACOS	ACTION
Ctrl+G	Command+G	Group nodes.
Ctrl+Shift+G	Command+Shift+G	Ungroup nodes.
Ctrl+K		Create, use, or rename a shortcut to an Model Builder node (for use in the Application Builder).
Ctrl+L	Command+L	Take a quick image snapshot.
Ctrl+N	Command+N	Create a new model.
Ctrl+O	Command+O	Open a model file.
Ctrl+P	Command+P	Print the contents of the plot window.
Ctrl+S	Command+S	Save a model file.
Ctrl+V	Command+V	Paste copied text.
Ctrl+Y	Ctrl+Shift+Z	Redo the last undone operation.
Ctrl+Z	Command+Z	Undo the last operation.
Ctrl+1		Create a local variable or correct the type of an existing variable in methods.
Ctrl+7		Toggle comments on and off in methods.
Ctrl+up arrow	Command+up arrow	Move a definitions node, geometry node, physics interface or feature node (except default nodes), material node, mesh node, study step node, or results node up one step.
Ctrl+down arrow	Command+down arrow	Move a definitions node, geometry node, physics interface or feature node (except default nodes), material node, mesh node, study step node, or results node down one step.
Ctrl+Tab	Ctrl+Tab	Switch focus to the next window on the desktop.
Ctrl+Shift+Tab	Ctrl+Shift+Tab	Switch focus to the previous window on the desktop.
Ctrl+Shift+A		Switch to the Application Builder window from the Model Builder.
Ctrl+Shift+M		Switch to the Model Builder window from the Application Builder.
Ctrl+F4	Command+W	Close the active window in COMSOL Desktop, if it is closable.
Ctrl+F8		Test an application.
Ctrl+Alt+left arrow	Command+Alt+left arrow	Switch focus to the Model Builder window.
Ctrl+Alt+right arrow	Command+Alt+right arrow	Switch focus to the Settings window.
Ctrl+Alt+up arrow	Command+Alt+up arrow	Switch focus to the previous section in the Settings window.
Ctrl+Alt+down arrow	Command+Alt+down arrow	Switch focus to the next section in the Settings window.
Shift+F10 or (Windows only) Menu key	Ctrl+F10	Open the context menu.
Ctrl+Pause	Command+. (Command + period)	Stop running a method when test running applications.
Ctrl+Space, Ctrl+/	Ctrl+Space, Ctrl+/	Open list of predefined quantities for insertion in text fields and table cells for expressions. Ctrl+/ is an alternative primarily intended for users of Asian Windows versions.

SHORTCUT (WINDOWS, LINUX)	SHORTCUT (MACOS	ACTION
+, -	+, -	Highlight the next or previous entity for a 3D geometry in the Graphics window. Expand or collapse a branch in the Model Builder.
R	R	Toggle between automatic and manual rotation center for mouse rotation in 3D.
X, Y, Z	X, Y, Z	Press to force rotation around the *x*, *y*, or *z* axis, respectively, when you move the mouse in 3D.

3

Building a COMSOL Multiphysics Model

This chapter explains a range of methods and topics used when building models in COMSOL Multiphysics®: From working with the Model Builder and fundamental concepts for building a model to the use of units. For examples of how to build a complete model and application step by step, see the application libraries for COMSOL Multiphysics and the add-on modules.

In this chapter:

- Building Models in the Model Builder
- Modeling Development Tools
- Working with Nodes in the Model Builder
- Modeling Guidelines
- Multiphysics Modeling Workflow
- Specifying Model Equation Settings
- Boundary Conditions
- Computing Accurate Fluxes
- Using Load Cases

- Numerical Stabilization
- Using Units

Building Models in the Model Builder

The power of COMSOL Multiphysics is the ease of working with all the features and functionality required to build a model in The Model Builder. The sections About the Sequence of Operations, The Component Node, Branches and Subbranches in the Tree Structure, Settings and Properties Windows for Feature Nodes, and Opening Context Menus and Adding Nodes further introduce you to key concepts about navigating in the Model Builder, the structure of the tree, and how to add features (nodes) as you build your model.

The physics feature nodes that are added to physics interfaces are flexible and several sections describe the ways to identify changes, status updates, and other ways to work with these nodes: The Physics Nodes, Physics Interface Default Nodes, Physics Feature Nodes by Space Dimension, Physics Interface Node Context Menu Layout, Physics Exclusive and Contributing Node Types, Physics Node Status, Dynamic Nodes in the Model Builder, and Errors and Warnings.

- The Root Settings and Properties Windows
- Creating a New Model
- The COMSOL Desktop

The Model Builder

The modeling procedure is controlled through the **Model Builder** window, which is essentially a *model tree* with all the functionality and operations for building and solving models and displaying the results. These are introduced to your modeling procedure by adding a *branch*, such as the Geometry branch. Branches can have further *nodes* (or *subbranches*) that relate to their parent node. It is all About the Sequence of Operations. See Figure 3-2 for an example.

A node has its own properties and *Settings* window that are characteristic to it. Branches and subbranches can also contain properties and settings. See Branches and Subbranches in the Tree Structure and Settings and Properties Windows for Feature Nodes for examples.

The Model Builder has many types of nodes to help you create models and visualize the model structure — for example, the Component node is categorized by space dimension, and nodes are dynamic, which helps you identify nodes that change status. See Component Nodes by Space Dimension, Physics Interface Default Nodes, and Dynamic Nodes in the Model Builder for more information.

Also learn about the context menu available when you right-click a node in the Model Builder (Opening Context Menus and Adding Nodes). In the next section (Working with Nodes in the Model Builder), there is also information about Going to the Source Node, Copying, Pasting, and Duplicating Nodes, Undoing and Redoing Operations, Clearing Sequences and Deleting Sequences or Nodes, and Disabling or Enabling Nodes.

- The Root Settings and Properties Windows
- Creating a New Model
- Basic Navigation
- The COMSOL Desktop

About the Sequence of Operations

COMSOL Multiphysics operates through *sequencing* and evaluates most of the branch nodes in the Model Builder from the top down as a *sequence of operations*. By adding nodes to a branch in the Model Builder in a certain order, you set up such sequences of operations, which makes it possible to, for example, parameterize a model and rerun the simulation. COMSOL Multiphysics then reevaluates each sequence, automatically updating the geometry, mesh, physics interfaces and features, and solution. A solver sequence, for example, could define your model with one solver and then, using the returned solution, solve it with an alternative solver.

For most sequences, you run the sequence by right-clicking the top node of the branch and selecting **Build All** (geometry) and **Build** (mesh), **Compute** (studies), or **Plot** (plot groups), or by pressing F8. These buttons are also on the **Settings** window and in the respective toolbars.

Some nodes under a physics interface branch can override other nodes higher up in the sequence. How the COMSOL Multiphysics software treats those nodes depends on whether they are contributing or exclusive nodes (see Physics Exclusive and Contributing Node Types).

The sequence of operations means that the order of the nodes in the tree is important. In the following branches of the model tree, the node order makes a difference, and you can move nodes up and down to change the sequence of operations for these nodes: Geometry, Material, physics interfaces and features, Mesh, and Solver.

Also, the order can have some importance in the plot groups in the Results branch and also for the Perfectly Matched Layer and Infinite Element Domain nodes in the Definitions branch (those nodes are available with some of the add-on modules).

- Physics Node Status
- Physics Exclusive and Contributing Node Types
- Creating a Geometry for Analysis and Working with Geometry Sequences
- Moving Nodes in the Model Builder

The Global Definitions Node

Under the **Global Definitions** node ( ) you can add functionality that is global and applies to the entire mode. Right-click the **Global Definitions** node to add global parameters, variables and variable utilities, user-defined functions, load and constraint groups, global materials, default model inputs, and more. See Global Definitions.

The Component Node

A model component is a fundamental part of the model and contains a geometry with its associated physics interface, mesh, and variables and other definitions that are local to that component. The **Component** node defines the namespace for each part of a model that is defined in a model component. A model can have several **Component** nodes. For example, if you are setting up a system model using both a 2D simplification — represented in one 2D **Component** branch — and a full 3D description in another **Component**, these can both be added to the Model Builder to represent different aspects or parts of the model. You can couple variables between different components in a model using coupling operators.

To **Add Physics** and **Add Mesh** to the Component, from the **Home** toolbar, or for any operating system, right-click the **Component** node. See The Add Physics Window, and Creating a Mesh for Analysis for more information.

The **Component** node icon also indicates the space dimension:.

TABLE 3-1: SPACE DIMENSION ICONS IN THE MODEL BUILDER

ICON	SPACE DIMENSION
	3D
	2D axisymmetric
	2D
	1D axisymmetric
	1D
	0D (space-independent models for chemical reactions and other ODEs and DAEs)

ADDING A COMPONENT TO A MODEL

You can create models with multiple geometries by adding one or more **Component** nodes to the Model Builder. Typically a component is added to the model in the Model Wizard when you select a space dimension.

To add a **Component** node or nodes:

- Right-click the **root** node (the topmost node) in the **Model Builder** and select **Add Component** (see The Root Settings and Properties Windows).
- In The Model Wizard on the **Select Space Dimension** page, select **3D**, **2D axisymmetric**, **2D**, **1D axisymmetric**, or **1D**. Continue defining the model as in Creating a New Model.

COPYING, PASTING, AND INSERTING COMPONENTS

You can copy and paste model components within a COMSOL Multiphysics session and also between COMSOL Multiphysics sessions, as long as the copied component information remains in the clipboard.

To copy a component with all its subnodes, right-click the **Component** node and choose **Copy** (or, for Windows users, click **Copy** on the Quick Access Toolbar). You can then paste it in the same or a new COMSOL Desktop session by right-clicking the root node and choosing **Paste Multiple Items** (or, for Windows users, click **Paste Multiple Items** on the Quick Access Toolbar).

It is also possible to insert components from another COMSOL Multiphysics model. To do so, right-click the top node (root node) and choose **Insert Components from Model**. An **Insert Components** dialog box appears where you can browse or type the path and name of the COMSOL Multiphysics model file from which you want to insert components in the **Model** field. Select one or more of the components in the model from the **Components** list and then click **OK** to insert them into the current model.

Some aspects when inserting or pasting a component into an existing model:

- Existing components in the open model may conflict with the inserted ones. In such cases, the inserted component will be renamed (for example, from `comp1` to `comp2`). Because inserting a component also inserts many other nodes (geometry, physics, materials, coordinate systems, and so on), these will also be renamed if there are existing ones in the open model.
- Most of the nodes under a component only requires that the other nodes under the same component is inserted with them. However, there are some situations when items outside the component must be included. Especially, the geometry sequence depends on such items. When inserting or pasting a component, the process automatically includes necessary global parameters, global functions, and geometry parts. It will not include references to items in other components.

- File references are inserted as is, and no attempt is made to check if the file exists. When inserting or pasting a component, the process does not include stored files but rely on the original file path to be valid.
- Global parameters, global variables, and global functions in variable expressions (either in other variables or in physics settings) will not be inserted or pasted automatically.
- Deformed geometries and their associated meshes are not included in the insertion or paste operation. These geometries and meshes are typically the result of computing a solution and contain binary data that is not included in the insertion either. They should appear again after re-solving, which you need to do after the insertion anyway.

Altogether, these aspects may cause an insert or paste operation to be incomplete to some degree. In some cases, the difference is reported in a message dialog box after the insertion process has finished. Click **Cancel** in this dialog box to revert the insertion process.

SWITCHING TO ANOTHER COMPONENT

In a model with more than one component, you can switch the focus to another component by selecting from the list of components in the **Home** toolbar's **Model** section. You can also switch to another component by clicking its **Component** node in the model tree (or any other node inside that component).

THE DEFAULT NODES

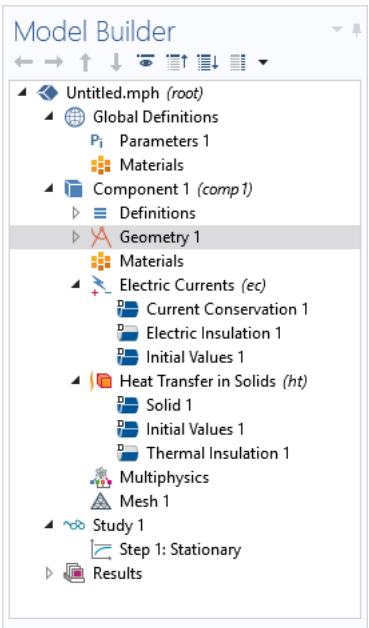

Figure 3-1: An example of the Model Builder default nodes for the Electric Currents and Heat Transfer in Solids interfaces.

These default nodes are normally added under a **Component** node:

- **Definitions**: Contains user-defined variables, selections, views, pairs, functions, probes, nonlocal couplings, and coordinate systems, which are defined locally for the model. See Global Definitions, Geometry, Mesh, and Materials for information about using these local **Definitions** (≡) and **Global Definitions** (⊜). Use **Global Definitions** to define **Parameters**, **Variables**, **Functions**, and loads and constraint groups with a global scope — that is, groups that are not specific to one **Component** node.
- **Geometry** ( ): Contains the sequence of geometric objects and operations (or imported CAD data) that defines the model geometry.

- **Materials** ( ): Contains the materials and material properties used as sources for material data in the component. See Materials for detailed information.
- **Physics interfaces** ( ): Any added physics interface displays as a node under **Component** (**Solid Mechanics** in Figure 3-1 for example).
- **Multiphysics** ( ): When a multiphysics interface is added to the Model Builder, this node contains all the relevant multiphysics coupling features for that interface. See Multiphysics Modeling Workflow for more information.
- **Meshes** ( ): Contains the sequences of meshing operations that defines the computational meshes for the model. When there is only one mesh in the model, its **Mesh** node appears directly under the **Component** node.

Branches and Subbranches in the Tree Structure

The **Settings** window has the following sections (also see Figure 3-3):

The label appears on the node as the default node name. The default label is Component 1, but you can change it in the **Label** field.

The name is a string used to define a namespace for the model component and identify variables defined in that component. The default component name is `comp1`, `comp2`, and so on, but you can change it in the **Name** field. See Settings and Properties Windows for Feature Nodes and Displaying Node Names, Tags, and Types in the Model Builder for more information.

GENERAL

This section contains general settings that you normally do not need to change:

Unit System

The default setting in the **Unit system** list, **Same as global system**, is to use the global unit system, which you specify in the root node's **Settings** window. If you want to use another unit system in a model, select it from this list.

Underneath, you can define the coordinates for the frames in a model if you do not want to keep the default names. All frames are always defined. See About Frames for more information about frames.

Spatial frame coordinates

For **Spatial frame coordinates**, the default names are x, y, and z for 3D as well as planar 1D and 2D geometries. For axisymmetric geometries, the default names for the spatial frame coordinates are r, φ (**phi**), and z. If you use the geometry to represent something other than space, or if you for some other reason want to use other names for the spatial coordinates, you can change the names in the fields for the **First**, **Second**, and **Third** coordinate under **Spatial frame coordinates**.

Material frame coordinates

For **Material frame coordinates**, the default names are X, Y, and Z for 3D as well as planar 1D and 2D geometries. For axisymmetric geometries, the default names for the material frame coordinates are R, φ (**PHI**), and Z. You can change the names in the fields for the **First**, **Second**, and **Third** coordinate under **Material frame coordinates**.

Geometry frame coordinates

For **Geometry frame coordinates**, the default names are X_g, Y_g, and Z_g for 3D as well as planar 1D and 2D geometries. For axisymmetric geometries, the default names for the geometry frame coordinates are R_g, φ_g (**PHIg**), and Z_g. You can change the names in the fields for the **First**, **Second**, and **Third** coordinate under **Geometry frame coordinates**.

Mesh frame coordinates

For **Mesh frame coordinates**, the default names are X_m, Y_m, and Z_m for 3D as well as planar 1D and 2D geometries. For axisymmetric geometries, the default names for the mesh frame coordinates are R_m, φ_m (**PHIm**), and Z_m. You can change the names in the fields for the **First**, **Second**, and **Third** coordinate under **Mesh frame coordinates**.

You cannot use the variable for the time, t, as a frame coordinate name.

Geometry Shape Order

The setting in the **Geometry shape order** list determines the order of the curved mesh elements that determine the geometry shape. The default setting is **Automatic**, but it is also possible to select an order such as **Linear**, **Quadratic**, **Cubic**, **Quartic**, **Quintic**, **Sextic**, and **Septic**. The default setting allows for automatic reduction of the order in some cases.

By default, the software avoids inverted elements by an optimization of the element shapes. To deactivate that functionality, clear the **Avoid inverted elements by curving interior domain elements** check box. See Avoiding Inverted Mesh Elements for more information.

- Creating a New Model
- The Root Settings and Properties Windows
- Editing Node Properties, Names, and Labels
- About Frames
- Setting the Unit System for Models
- Using Extra Dimensions
- Curved Mesh Elements

Adding Extra Dimensions to a Model

To add an extra, abstract spatial dimension to a model, right-click the **Global Definitions** node ( ), and then from the **Extra Dimensions** context menu, choose **3D**, **2D Axisymmetric**, **2D**, **1D Axisymmetric**, or **1D** to add an extra dimension to the selected space dimension (requires that **Extra Dimensions** is selected in the **Show More Options** dialog box). An **Extra Dimension** node, in the chosen space dimension, is then added under the **Global Definitions** node in the Model Builder. You can add one or several **Extra Dimension** nodes. It is also possible to attach an extra dimension to several components. Extra dimensions can be useful, for example, to model transport and reactions in two different scales, where one scale is the homogenized scale of a set of larger pores between particles or larger cracks in rocks, and a second smaller scale is the one inside porous particles or in porous rock.

The added node then contains these default nodes: **Definitions**, **Geometry**, and **Mesh**. The settings for the **Extra Dimension** node are the same as for the **Component** node, except it has a unique **Name**.

The default nodes associated to the Extra Dimension are considered the extra dimension geometry and extra dimension mesh. The original geometry and mesh are called the base geometry and base mesh.

Before you can use the extra dimensions in physics interfaces, they must be attached on a selection in the base geometry.

The default node label in the **Label** field is **Extra Dimension 1** for the first **Extra Dimension** node. The component name is a string used to identify variables in the model. The default Extra Dimensions component name is `xdim1`, `xdim2`, and so on, but you can change it in the **Name** field.

Using Extra Dimensions

Branches and Subbranches in the Tree Structure

You can proceed through your modeling in the Model Builder by selecting the branches in the order suggested by the default positions, from the top down, or selecting and defining each branch as needed. One level below the main Component branch are subbranches as described in Table 3-2 and shown in Figure 3-2. The node appearance can also change depending on many factors. See Dynamic Nodes in the Model Builder for examples.

TABLE 3-2: THE MODEL BUILDER BRANCHES AND SUBBRANCHES

FIGURE REF.	ICON	NAME	DESCRIPTION AND LINK TO MORE INFORMATION
Main Branches			
1		Global Definitions	Define global parameters, and right-click to define global Variables, Functions, Load and Constraint Groups, a Materials branch, and optional Geometry Parts. Mesh Parts, and Extra Dimension branches, which are globally available in all model components. See The Global Definitions Node.
2	Various	Component	This branch includes the subbranches Definitions, Geometry, Materials, physics interfaces, and Mesh. You can also right-click the node to Add Physics and Add Mesh at this level. See The Component Node.
3		Study	This subbranch is where you set up study steps and solver configurations to solve a model using one or more study types for different analyses. See Studies and Solvers.
4		Results	The features contained in the subbranches for Datasets, Derived Values, Tables, Export, and Reports are used to present and analyze results. See Results Analysis and Plots.
Subbranches			
5		Definitions (Local)	This subbranch is used to create Variables, Functions, Selections, Coordinate Systems, Nonlocal Couplings, and Probes as well as other definitions that are local to a specific component in your model. See Global and Local Definitions.
6		Geometry (Local)	This branch contains the definition of the model's geometry, where you can import a geometry or build one yourself using the available tools. See Geometry Modeling and CAD Tools.
7		Materials (Global)	This branch makes it possible to add materials and a material switch for material sweeps at the global level. You can add materials in the same way as you do under a Component branch, but materials on the global level are available throughout the model and therefore have no Geometric Entity Selection section. See Global Materials.
7a		Materials (Local)	Collect all material properties organized in Material nodes with a defined geometric scope. Material properties required by any of the physics interfaces and features show up automatically in the defined material's Settings window. See Materials.
8	Various	Physics interfaces	Each physics interface forms its own branch based on the model definition requirements. See The Physics Interfaces and Creating a New Model to start.

TABLE 3-2: THE MODEL BUILDER BRANCHES AND SUBBRANCHES

FIGURE REF.	ICON	NAME	DESCRIPTION AND LINK TO MORE INFORMATION
8a		Multiphysics	This is a main branch but is associated directly with the physics interface branches above it. It contains multiphysics coupling nodes. See The Multiphysics Branch.
9		Mesh	This subbranch collects all meshes defined for a model. If there is only a single mesh in a model, its Mesh node appears directly under the corresponding Component node. See Meshing.
10		Datasets	Datasets refer to the source of data for creating Plots and Reports. It can be a Solution, a Mesh, or some transformation or cut plane applied to other datasets; that is, you can create new datasets from other datasets.
	8.85 e-12	Derived Values	Used to define evaluations of numerical results — globally, in a point, or integrated quantities. For 2D and 3D plots, you can also get numerical results directly in a table by clicking the plot. See About Derived Values.
		Tables	This subbranch displays the results from integral and variable evaluations defined in Derived Values nodes or by probes and stored in Table nodes. See The Table Window and Tables Node.
	Various	Plot Groups	After adding a 3D, 2D, or 1D Plot Group, plots are added and defined under this subbranch. See Plot Groups and Plots.
		Export	After a model is completed, you can add various components to this and then generate outputs (animations, data, images, or export), or export the information to your computer as image, movie, or data files for use in external documents or for other purposes. See Export Types.
		Reports	This subbranch opens the Report Generator, which is a tool for reporting and documenting models created in COMSOL. It creates a record of the entire model including all the settings made during the modeling process. The report is an overview of the model and includes model properties, geometry, physics interfaces and features, mesh, studies, and results and visualization. See Reports.

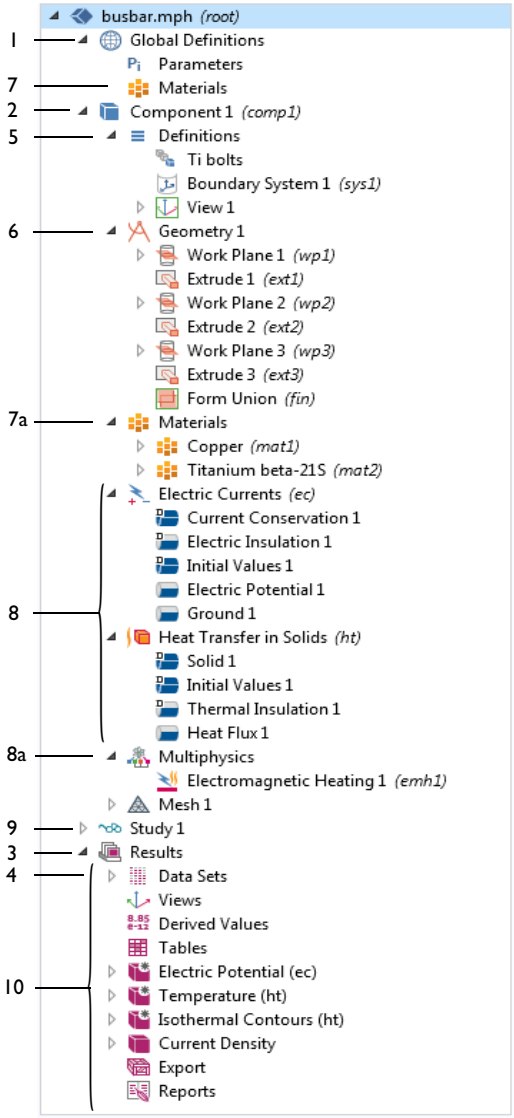

Figure 3-2: An example of the Model Builder tree structure showing the many different types of branches and subbranches available in a model. Refer to Table 3-2 *to learn more about a node. Use the numbers to locate the node in the table.*

SETTINGS WINDOW

For all operating systems, and when any node is clicked in the Model Builder (except a few *container nodes* such as Definitions and Datasets), a corresponding **Settings** window opens with the same name as the node. The **Settings** window contains settings for defining operations and properties specific to a node, as shown in Figure 3-3.

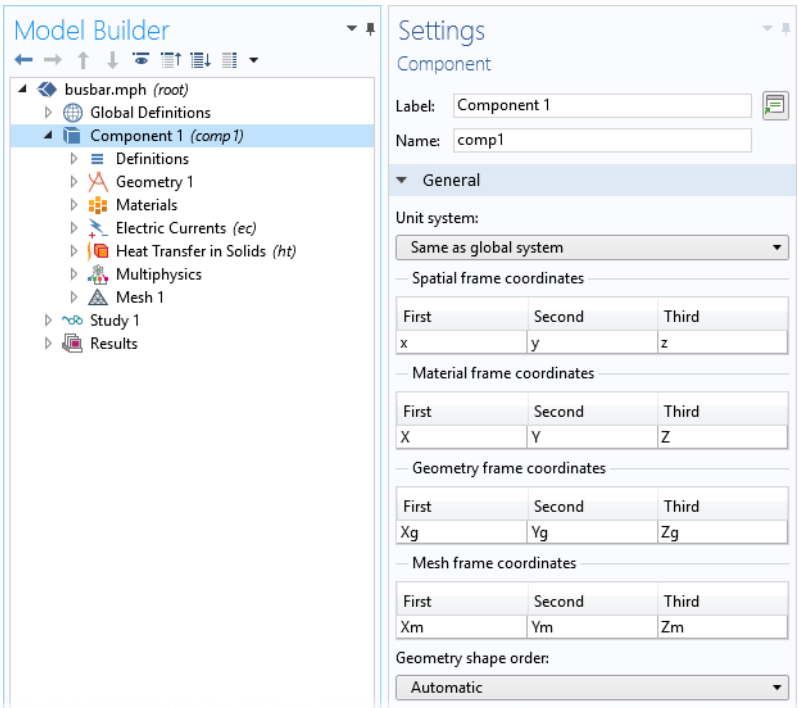

Figure 3-3: An example of a node Settings window. In this example, the Settings window for the Component node opens when the node of the same name is clicked. You can also toggle between the Settings and Properties window from the context menu.

SETTINGS WINDOW FUNCTIONALITY

When an operation or property is updated in the **Settings** window, its effect on the model is displayed in the Graphics window either instantaneously or by clicking the applicable button, which are available in some of the **Settings** window toolbars. If you update settings for the physics interfaces and features, you must recompute the solution to reflect the changes in the physics interface and features.

	For most sequences, you can run the sequence by right-clicking the top node of the branch and selecting **Build All** (geometry) and **Build** (mesh), **Compute** (studies), or **Plot** (plot groups), or by pressing F8. These buttons are also on the **Settings** window and in the respective toolbars.

To select the parts of the model to define in a specific **Settings** window, select the relevant geometric entities directly in the displayed model in the Graphics window, from the Selection List window, or as, for example, **All domains** in the **Settings** window.

LABELS AND NAMES IN THE SETTINGS WINDOW

Every **Settings** window has the option to change the node **Label**. The **Label** is the default node description (it defaults to the node **Type** followed by an index suffix). For example, it might be the **Electric Currents** interface, or in Figure 3-3 it is **Component**. You can also right-click and choose **Rename** or press F2.

Some **Settings** windows have the option to change the **Name**. These include physics interfaces, components (as in Figure 3-3), multiphysics couplings, and some Definitions features. The **Name** is used primarily as a scope prefix for variables defined by the physics interface. Refer to such physics interface variables in expressions using the pattern `<name>.<variable_name>`. In order to distinguish between variables belonging to different physics interfaces, the `name` string must be unique. Only letters, numbers, and underscores (_) are permitted in the **Name** field. The first character must begin with a lowercase or uppercase letter (a–z or A–Z). All other characters in the Name must be a lowercase or uppercase letter, a number between 0 and 9, or an underscore (_). See Variable Naming Convention and Namespace for more information.

You can choose to display any combination of the **Name**, **Tag**, and **Type** in the Model Builder. See Displaying Node Names, Tags, and Types in the Model Builder.

In most **Settings** windows, there is also a **Create Shortcut** button ( ) next to the **Label** field. Click it (or press Ctrl+K) to create a shortcut to that node for use in the Application Builder (see the Application Builder documentation for more information). If a shortcut already exists, you can click the **Rename Shortcut** button ( ) (or press Ctrl+K) to rename the shortcut.

PROPERTIES WINDOW

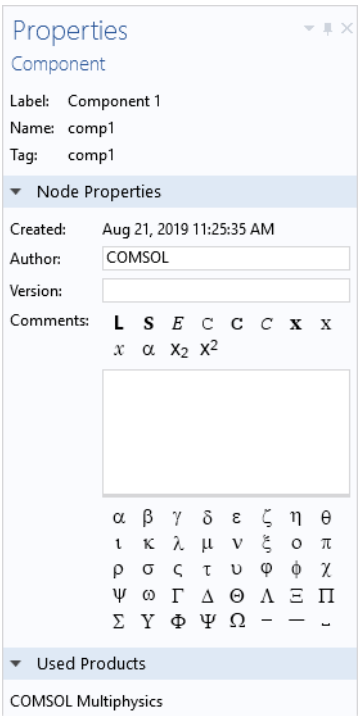

Figure 3-4: An example of a node Properties window. In this example, the Properties window for the Component node opens when you right-click the node and select Properties from the context menu. You can also toggle between the Settings and Properties window from this context menu.

The **Properties** window ( ) in Figure 3-4 is accessed by right-clicking the node and choosing **Properties** from the context menu. The information listed includes the **Label**, **Name**, **Tag**, and the **Node Properties**.

- The **Label** can be edited on the Settings window. The default or edited name is displayed here but cannot be changed in this window.

- The **Name** is available for Component, functions and other nodes under Definitions, Material, and physics interface and multiphysics coupling nodes. You can edit the name on the Settings window for Component nodes, the main physics interface nodes, and for some functions and other nodes under Definitions, where the names servers as an identifier in the namespace for variables or as the function name, for example.
- The **Tag** is unique for each node and is assigned automatically. Tags are primarily used when running COMSOL models in Java or MATLAB. To display the Tag in the Model Builder, click **Model Builder Node Text** on the toolbar and choose **Tag**. See Displaying Node Names, Tags, and Types in the Model Builder for more information.
- The **Node Properties** section includes the following information: **Created**, **Author**, **Version**, and **Comments** (the **root** node is a special case; see The Root Settings and Properties Windows). The **Created** field is automatically assigned by the software. You can edit the **Author**, **Version**, and **Comments** fields in this window. For the **Comments** field, you can add formatting and special characters that will appear in reports. This information can also be included when creating Reports.

- Toolbars and Keyboard Shortcuts
- About Selecting Geometric Entities
- The Graphics Window

Displaying Node Names, Tags, and Types in the Model Builder

SELECTING THE MODEL BUILDER NODE CONTENTS

The Model Builder always shows the label for the nodes. To add more information, on the **Model Builder** toolbar click **Model Builder Node Text** . Then select any combination of options from the list: **Name**, **Tag**, and **Type**. See Figure 3-5 for examples.

- A **Name** is only used in the Model Builder for short names (descriptions) of the nodes. The **Name** can only be changed for the top Component, physics interface nodes and multiphysics couplings, and for **Definitions** nodes. Some **Settings** windows have the option to change the **Name**. See Settings and Properties Windows for Feature Nodes for information about **Label** versus **Name**. The Name and Tag for top level features are often the same.

For **Definitions** features, the Name is displayed differently for Functions, Probes, Nonlocal Couplings, and Pairs. See Common Settings for the Definitions Nodes for more information.

- A **Tag** is unique for each node and is assigned automatically. Tags are primarily used when running COMSOL models in Java or MATLAB. Select **Tag** to display each node's feature name with the predefined tag in curly braces using an italic font. The Name and Tag can be the same.
- A **Type** is automatically assigned by the software and cannot be changed. Select **Type** to display each node's feature type (predefined name). This is the most useful if a node **Label** is renamed or if you use a local language other than English and want to see the predefined name; otherwise, the type and the label are the same (except that the label typically includes a number, such as *Boundary System 1*).

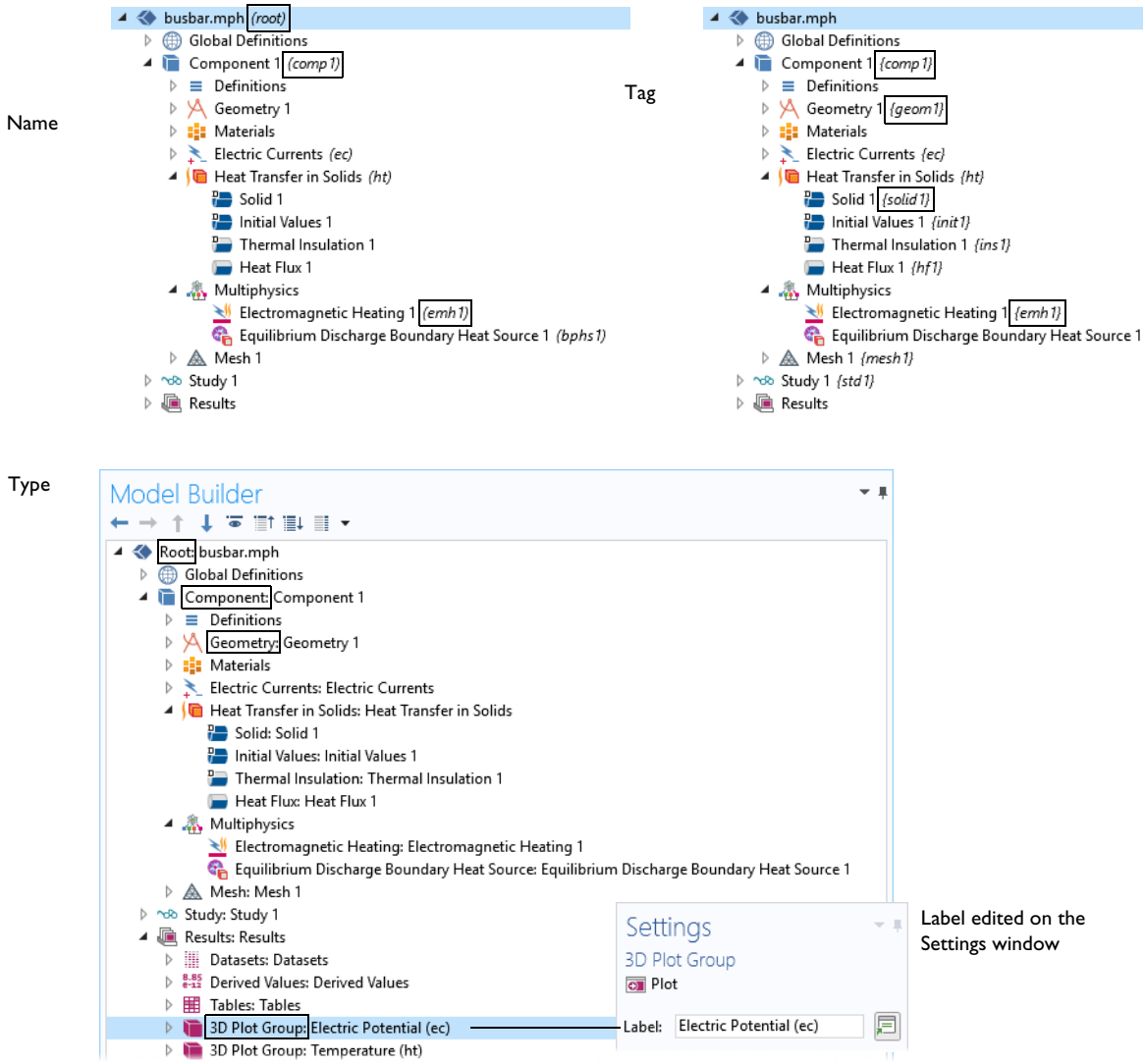

Figure 3-5: Examples of the available combinations on the Model Builder Node Label menu. The second example of a Type shows how this is useful when the Label is edited in the Settings window and you need to know the original type of node.

LABELS

Node **Settings** windows have a **Label** field where you can change the default node description for all levels (except the root node, which gets its name from the model filename). The label can also be changed by right-clicking and choosing **Rename** or by pressing F2.

	The **Label** can also be displayed in the Model Builder where it is called a **Tag**. See Settings and Properties Windows for Feature Nodes.

	• Editing Node Properties, Names, and Labels • The Root Settings and Properties Windows

Opening Context Menus and Adding Nodes

In addition to using the toolbars and menus (see The COMSOL Desktop Menus and Toolbars), you can right-click a node to open a *context menu*. The context menu lists all the functionality available as properties and subnodes to a particular node in a branch of the tree. Figure 3-6 shows the context menu for some of the Geometry node options. From the menu you can add additional, and relevant, functionality, operations, or attributes to the sequence. Often there is a mixture of submenus, keyboard shortcuts, or specific features to choose from as in Figure 3-6 and Figure 3-7. There are also standard options such as **Rename**, **Properties**, and **Help**.

The context menu is also further divided and categorized for physics interfaces, as in the section Physics Interface Node Context Menu Layout and Figure 3-7.

To add physics feature nodes to physics interfaces, in general, go to the **Physics** toolbar, no matter what operating system you are using. Subnodes are available by clicking the parent node and selecting it from the galleries that open.

The layout of the context menu (especially for physics interfaces) depends on whether the nodes are grouped by space dimension. The default is ungrouped nodes. See Grouping Nodes by Space Dimension and Type for an example comparing the different context menus.

OPENING THE CONTEXT MENU

- Right-click any node in the **Model Builder** to open the context menu
- Once a node is highlighted, right-click anywhere in the **Model Builder** to open it.
- Use the shortcuts based on operating system:
  - Windows: Press Shift+F10.
  - macOS: Press Ctrl+F10.
  - Linux: Press Shift+F10.

After selecting an option from the list, an associated **Settings** window opens to the right (by default) of the **Model Builder** window. See Figure 3-3 for an example.

In the context menu, a plus sign next to any icon ( ) means a node of that type is added to the Model Builder.

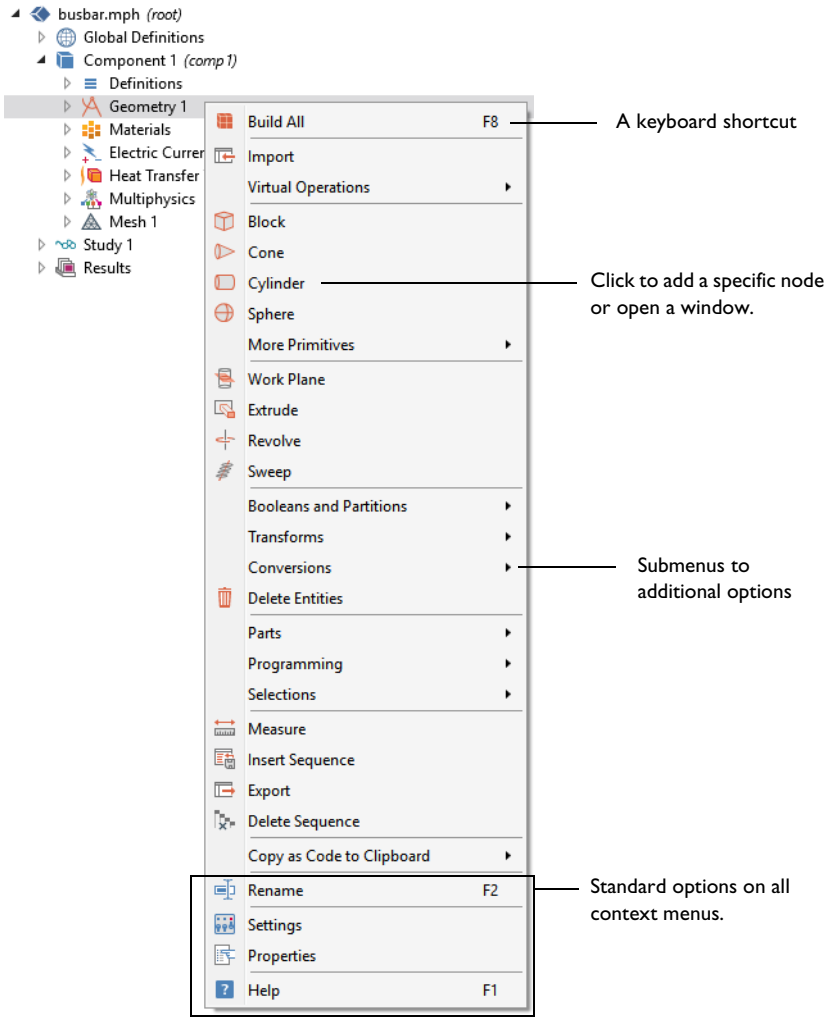

Figure 3-6: A context menu opens when you right-click any node in the Model Builder. In this example, the options available for the Geometry node are shown.

- Settings and Properties Windows for Feature Nodes
- Grouping Nodes by Space Dimension and Type
- Clearing Sequences and Deleting Sequences or Nodes
- Disabling or Enabling Nodes
- About Geometric Entities

The Physics Nodes

An important part of building a model is where you add physics branches. For example, when Creating a New Model. This branch (see Figure 3-2 for an example) contains the nodes that define the material properties, equations, loads, initial values, boundary conditions, and other parts of the physics that the model describes. All **Settings** windows for the specification of the physics and equations accept parameters and variables as input data.

SPECIFYING PHYSICS INTERFACE SETTINGS

Each physics interface includes nodes for specifying all input data for a specific physics in a model:

- Material properties and material models
- Boundary and physics interface conditions
- Equations (for equation-based modeling)
- Initial conditions

In addition, you can specify weak form contributions and element types for additional flexibility.

Specifically, the settings are available on the following parts of the geometry:

- Domains
- Boundaries
- Edges
- Points
- Additional properties that are independent of the geometry

Not all of these options are available for all geometry types and physics interfaces.

PHYSICS FEATURE NODES BY SPACE DIMENSION

The physics feature nodes indicate the geometric entity level (domains, boundaries, edges, points, or pairs) based on the space dimension of the Component (see Table 3-3). The nodes also correspond to The Graphics Window Toolbar Buttons and Navigation, some of which are also based on space dimension.

See Physics Exclusive and Contributing Node Types and Physics Node Status for examples of other differences to how the nodes display in the Model Builder.

TABLE 3-3: PHYSICS FEATURE NODES BY SPACE DIMENSION

NAME	3D	2D AND 2D AXISYMMETRIC	1D AND 1D AXISYMMETRIC
Domain level			
Domain level, default node			
Boundary level			
Boundary level, default node			
Boundary level, Pairs			
Point level			—
Edge level		—	—

- The Physics Interfaces
- Physics Interface Default Nodes
- Physics Interface Node Context Menu Layout
- Physics Node Status

Physics Interface Default Nodes

When you add a physics interface, the software automatically adds a corresponding physics interface branch in the tree, which typically includes a number of default nodes, including but not limited to:

- A model equation or material model node, typically on the domain level. This node defines the domain equations (except optional sources, loads, reactions, and similar contributing domain quantities) and the related material properties or coefficients.
- A boundary condition node. For multiphysics interfaces there is one boundary condition for each participating physics.
- For axisymmetric models, the symmetry axis has an **Axial Symmetry** boundary condition (see Physics Interface Axial Symmetry Node).
- An **Initial Values** node for specifying initial values for a time-dependent simulation or an initial guess for the solution to a nonlinear model (see Specifying Initial Values).

In most cases, the default nodes' initial selections include all domains or all boundaries (or all instances of another geometric entity level). Their selection is always every instance that is not overridden by another node on the same geometric entity level. It is not possible to delete such default nodes, but you can copy and duplicate all default nodes. Some multiphysics interfaces also add default nodes with no initial selection, which are possible to delete from the model. Default nodes include a *D* (for "default") in the upper-left corner ( ) to indicate their special status. The copy or duplicate of a default node is a node of the same type but behaves as a normal node with an initially empty selection.

For example, for a geometry with four boundaries, the default boundary condition's initial selection includes all four boundaries. If another exclusive boundary condition for Boundary 3 is added, that boundary becomes overridden (inactive) in the default boundary condition's selection. If you disable or remove that boundary condition, the default boundary condition becomes active for Boundary 3 again. You cannot change a default node's selection.

Some physics interfaces also add standard nodes directly when you add them to a model. They represent functionality that is likely to be useful but that you might want to make only active on a part of the geometry or delete. Such nodes do not include a *D* in the upper-left corner.

- Physics Feature Nodes by Space Dimension
- Physics Node Status
- Physics Exclusive and Contributing Node Types
- Dynamic Nodes in the Model Builder

Physics Interface Node Context Menu Layout

The context menu opens when you right-click a physics interface node, or any node in the Model Builder (see Opening Context Menus and Adding Nodes). Depending on the space dimension, this menu is divided into these

sections for most physics interfaces: the first section contains domain settings, the second boundary settings, the third edge settings, and the fourth has point settings.

!	There can be menu items with the same name but applied at different geometric entity levels.

!	To add physics feature nodes to physics interfaces, in general, go to the **Physics** toolbar, no matter what operating system you are using. Subnodes are available by clicking the parent node and selecting it from the gallery that opens.

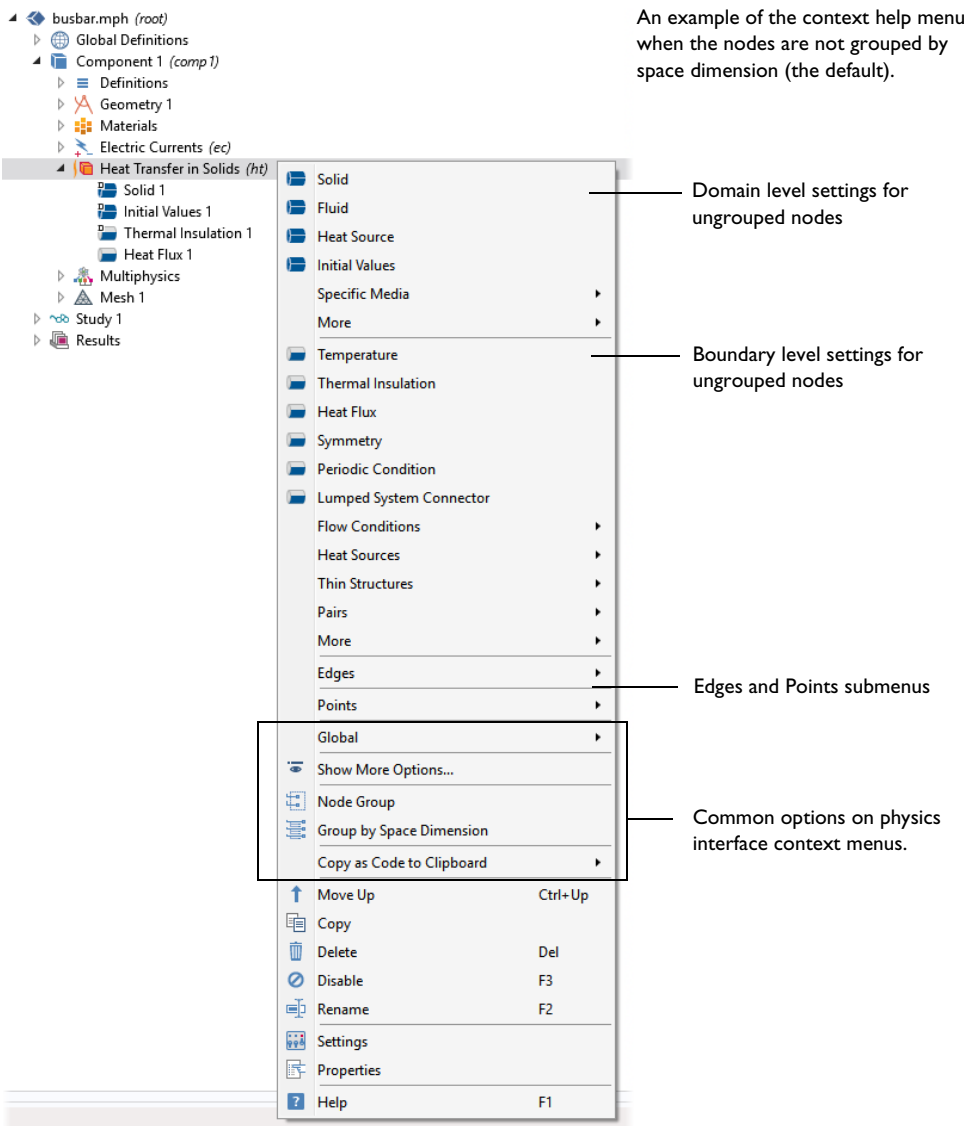

Figure 3-7: An example of a Heat Transfer in Solids interface context menu. The choices are based on the Component dimension (in this example it is 3D) as well as the physics interface. The menu is further divided by geometric entity level (domains, boundaries, edges, and points).

As shown in Figure 3-7, the context menu layout is also based on whether the nodes are not grouped (the default) or if **Group by Space Dimension** is selected.

Physics Exclusive and Contributing Node Types

The nodes for the physics interfaces and features are in a sequence, which acts like a macro that the software runs in a top-down order. Depending on the selection for each node, a node can totally or partially override, or shadow, a node earlier in the sequence. How the software treats these nodes depends on the relationship. There are two different types of nodes: *exclusive* and *contributing* (see Figure 3-8)..

	The exclusive and contributing nodes maintain the described behavior only in relation to similar types of nodes within the same physics interface (for example, you can have a temperature constraint and a pressure constraint for the same boundary in the same model component).

	What the node looks like in the Model Builder is based on the space dimension. See Physics Feature Nodes by Space Dimension.

EXCLUSIVE NODES

The use of an *exclusive node* means that only one can be active for a given selection. That is, if you add another exclusive node (for example, an identical node) with the same selection, the first exclusive node is overridden and thus has no effect.

Typical exclusive nodes include model equations, initial values, and boundary conditions that are constraints, such as prescribed values for displacements, temperatures, pressures, and so on, or other Dirichlet-type conditions, including special variants of these such as ground conditions in electromagnetics and fixed constraints in structural mechanics. Also some boundary conditions that are not constraints but have a definitive meaning are exclusive nodes — for example, electric insulation, thermal insulation, and no-flow conditions. Depending on the selections for each node, an exclusive node can override another node partially. Nodes are exclusive only within their specific physics interface. When a node is selected in the Model Builder tree, nodes that are overridden by the selected node have a red arrow in the lower-left corner of the icon ( ), and nodes that override the selected node display a red arrow in the upper-left corner of the icon ( ).

CONTRIBUTING NODES

A *contributing node* means you can have more than one of these nodes with the same selection and that the software adds these together when evaluating the model. Typical contributing nodes are loads, fluxes, and source terms, where you can have more than one of each type that is active on the same domain or boundary, for example. The total effect is then a sum of each contributing node. When a node is selected in the Model Builder tree, the tree shows other nodes, which the current node contributes with, indicated using a yellow dot to the left of the icon (for example, in this boundary level icon). See also Figure 3-8 for an example.

ORDER OF EXCLUSIVE AND CONTRIBUTING NODES

An exclusive node typically override all other nodes that share some common geometric entity and that appear above it in the list of nodes under a physics interface. Conversely, a contributing node can contribute with an exclusive node that appears above it. For example, in a heat transfer interface, a **Temperature** exclusive node overrides a **Heat Flux** contributing node defined above it (when defined on some common boundaries). If you switch the order of those nodes, so that the **Heat Flux** node appears below the **Temperature** node, it then contributes with the **Temperature** node. Because the **Temperature** node imposes a constraint on the temperature, the computed solutions are identical when evaluating the temperature. However, the contributing heat flux changes the reaction force of the temperature condition, which you can verify by integrating the reaction force on a boundary using the `reacf` operator, for example.

LISTING OVERRIDES AND CONTRIBUTIONS

If your preferences include showing the **Override and Contribution** section in the **Settings** windows for physics nodes, you can find the following information about how exclusive and contributing nodes interact in the model. Click the **Show More Options** button ( ) and select the **Override and Contribution** in the **Show More Options** dialog box to display the information as in Figure 3-8 and described below.

- The **Overridden by** list contains the names of the nodes that the selected node is overridden by. The selected node is then overridden by these nodes at least partially, and the **Selection** list contains **(overridden)** for the geometric entities (boundaries, for example) where it is overridden. The nodes that the selected node is overridden by are indicated using a red arrow in the lower-left corner of the icon such as in this boundary level icon .
- The **Overrides** list contains the names of the nodes that the selected node overrides (where the current node is active). The nodes that the selected node overrides are indicated using a red arrow in the upper-left corner of the icon such as in this boundary level icon .
- The **Contributes with** list contains the names of the nodes that the selected node contributes with for at least some shared selection. The nodes that the selected node contributes with are indicated using a yellow dot to the left of the icon such as in this boundary level icon .

If a physics node is disabled locally in a study step using the **Physics and Variables Selection** section in the study step's **Settings** window, the indications of overrides and contributions in the Model Builder are unchanged (but disabled physics nodes get an asterisk to indicate that their state has been changed in at least one study step). However, the local variables and physics tree in the study step's **Settings** window displays the overrides and contributions taking the disabled nodes into account.

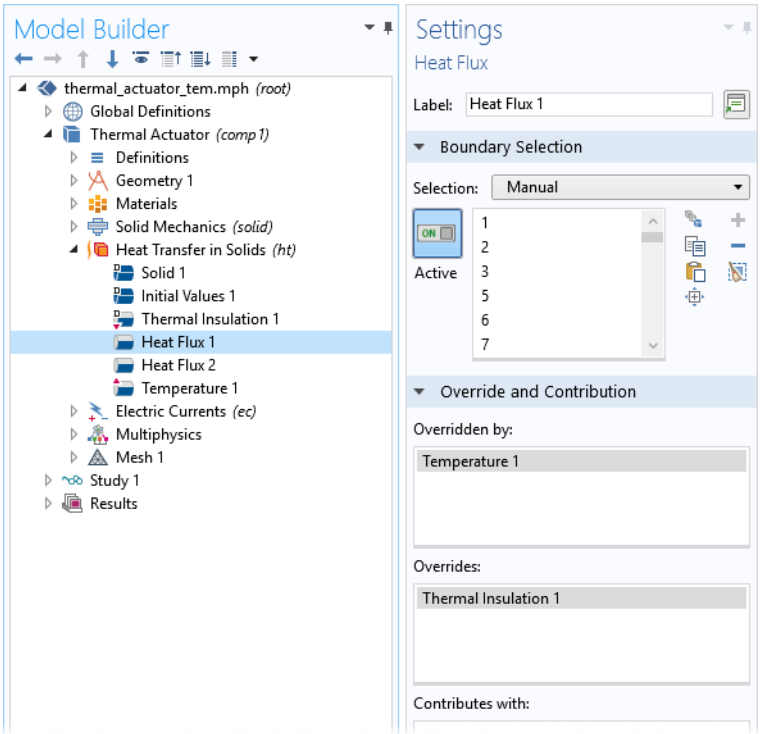

Figure 3-8: The Override and Contribution section lists other physics nodes that the selected node is overridden by, overrides, or contributes with.

- Physics Node Status
- Physics and Variables Selection
- Physics Interface Default Nodes

Physics Node Status

The status of a physics node depends on if it is a default node, the selection that it applies to, and other nodes in the same branch that can override nodes earlier in the sequence. You can change the order of nodes (except the default nodes) by moving them up or down.

OVERRIDDEN SELECTIONS

A node can be partially or completely *overridden* by another node further down in the same branch of the model tree that is of a similar, exclusive type. For example, if you specify a temperature boundary condition on boundary 1 and boundary 3, and then add another temperature boundary condition for boundary 3, the first temperature boundary condition is overridden on boundary 3. In the **Settings** window for the **Temperature** nodes that define the temperature boundary condition, the **Selection** list then shows **3 (overridden)** to indicate that the temperature boundary condition defined on this selection is overridden for boundary 3 but is still active on boundary 1. Deleting or disabling the other temperature boundary condition on boundary 3 reactivates the original temperature boundary condition, and then shows **3** (without the **(overridden)** indication).

SELECTIONS THAT ARE NOT APPLICABLE

For selections that are not applicable for a node (such as interior boundaries for an boundary condition that is only applicable for exterior boundaries), the **Selection** list then shows **(not applicable)** next to entries that are, in this case, interior boundaries.

EMPTY SELECTIONS

For physics nodes that you add to a model (that is, not for default nodes), a warning appears on the physics node when the node has no selection. An added source or boundary condition, for example, has no effect on the model, so leaving an added physics node with an empty selection might be an unintended state, leading to unexpected simulation results.

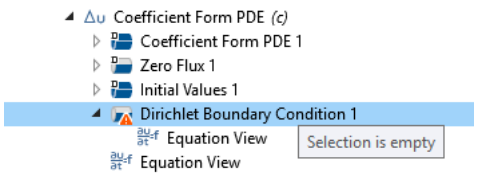

Figure 3-9: The warning and tooltip for an added physics node with an empty selection.

The warning for an empty selection does not appear in the following cases:

- For completely overridden selections.
- When no applicable entities are available.
- When selections are set to all entities, but the geometry has no entities on the given entity level (for example, no geometry or domain selection on a surface geometry).

ENABLING AND DISABLING NODES

By enabling or disabling physics nodes, you can activate and deactivate (shadow) other physics interface nodes that appear higher up in the physics interface branches.

- Physics Interface Default Nodes
- Physics Exclusive and Contributing Node Types
- Physics Feature Nodes by Space Dimension
- Clearing Sequences and Deleting Sequences or Nodes
- Disabling or Enabling Nodes

Dynamic Nodes in the Model Builder

The Model Builder is a dynamic environment. As your model is built and analyzed, there are numerous ways to quickly identify nodes that change status during the process. Table 3-4 lists generic examples and links to the dynamic visual aids that are used to help you.

- Branches and Subbranches in the Tree Structure
- The Component Node

TABLE 3-4: DYNAMIC NODES — VISUAL AIDS TO IDENTIFICATION

ICON	TYPE	NODE EXAMPLE AND LINK TO MORE INFORMATION (WHERE APPLICABLE)
	Error	For example, on a Material node . See Errors Relating to the Material Nodes.
	Error node	Errors and Warnings
	Current node, not built (yellow frame)	For example, on a Geometry node ( ). This node is also displaying the asterisk indicating the node is being Edited. The asterisk also appears on plot nodes when the plot has not been updated to reflect changes in the data or settings (for example, after re-solving), See The Current Node in Geometry Sequences.
	Current node (green frame)	A current node is used for Geometry and Meshing nodes and indicates that the feature or sequence of steps has been built. It is a green line on the left and upper edges of the node. For example, on a Geometry node , after building. Also see The Current Node in Geometry Sequences.
	Enabled sequence	During solution processing, the particular sequence that is enabled and runs when selecting Compute has a green border around its icon ( ). See Computing a Solution.
	Harmonic Perturbation	For example, on a boundary level node for the Electric Currents interface, Electric Ground node . See Harmonic Perturbation, Prestressed Analysis, and Small-Signal Analysis.
	Warning	For example, on a Mesh node .
	Editing, or in process of editing, a node	For example, on a Mesh node . This node is also displaying the asterisk indicating the node is being Edited. Also indicates physics interface nodes that have been disabled in a Study Step. See Editing and Building Geometry Nodes for Geometry nodes for example.
	Pairs	For example, on a 3D Boundary Level node . See Identity and Contact Pairs.
	Pairs — Fallback Features	For example, on a 3D Boundary Level pair node . See Identity and Contact Pairs.
	Contributing node	For example, on a 3D boundary level node . See Physics Exclusive and Contributing Node Types and Physics Node Status.
	Default node	For example, on a 2D boundary level node . See Physics Interface Default Nodes.
	Override	For example, on a 3D boundary level node . See Physics Exclusive and Contributing Node Types.
	Overridden	For example, on a 3D boundary level node . See Physics Exclusive and Contributing Node Types
STUDY STEPS ANALYSIS		
	Solve For	For example, a Laminar Flow interface where the green dot in the lower-right corner indicates that the study solves for the degrees of freedom in this physics interface. See Physics and Variables Selection.
	Disable in Solvers	For example, a Laminar Flow interface is enabled (not dimmed), shows that the study step provides degrees of freedom (the yellow dot in the lower-right corner), and has a change of state indicated by the asterisk. The yellow dot means that the study step provides degrees of freedom but does not solve for the physics interface. See Physics and Variables Selection.
	Change of State (editing)	An asterisk appears in the upper-right corner of nodes for which you change their state in the study step's selection tree compared to their state in the main model tree in the Model Builder. For example, for the Joule Heating interface .

TABLE 3-4: DYNAMIC NODES — VISUAL AIDS TO IDENTIFICATION

ICON	TYPE	NODE EXAMPLE AND LINK TO MORE INFORMATION (WHERE APPLICABLE)
	Disabled in Model (provides no degrees of freedom) and shows a change of state	In this example, a Transport in Diluted Species interface is disabled (unavailable), provides no degrees of freedom (red dot in the lower-right corner), and has a change of state indicated by the asterisk. See Physics and Variables Selection.
LOAD AND CONSTRAINT GROUPS		
	Load Group	This is an example of a Boundary Load node with a load group. This is for a 2D model at the boundary level. See Load Group and Using Load Cases.
	Constraint Group	This is an example of a Fixed Constraint node with a constraint group. This is for a 2D model at the boundary level. See Constraint Group and Using Load Cases.

Physics Symbols

There are physics symbols available with structural mechanics and some other physics features to help you to graphically indicate boundary conditions, loads, and other physics features:

- Physics Symbols for Structural Mechanics and Other Physics
- About Coordinate Systems and Physics Symbols
- Displaying Physics Symbols in the Graphics Window — An Example

	• Solid Mechanics and Using Load Cases • The Graphics Window

PHYSICS SYMBOLS FOR STRUCTURAL MECHANICS AND OTHER PHYSICS

To display the physics symbols listed in Table 3-5, select the **Enable physics symbols** check box under **Physics Symbols** in the main physics interface node's **Settings** window. This check box is not selected by default.

Once you have turned on the physics symbols for a certain physics interface, you can fine-tune the display. Every feature that has associated physics symbols now has a **Show physics symbols** check box, by which you can control the display of the symbols for that specific feature.

In the **Physics Symbols** section in the settings for the physics interface, you can click the **Select All** button, which displays all symbols in that physics interface by selecting all **Show physics symbols** check boxes in the **Settings** windows for the physics features that include symbols. Similarly, the **Clear All** button clears all **Show physics symbols** check boxes in the individual physics features.

The following symbols are available with the applicable structural mechanics feature nodes and with some other physics interfaces (this table is a partial list of available symbols).

TABLE 3-5: PHYSICS SYMBOLS

SYMBOL	SYMBOL NAME	DISPLAYED BY NODE	NOTES
	Added Mass[1]	Added Mass	
	Antisymmetry[1]	Antisymmetry	
	Body Load[1]	Body Load	
	3D Coordinate System		Green indicates the Y direction, blue indicates the Z direction, and red indicates the X direction.

TABLE 3-5: PHYSICS SYMBOLS

SYMBOL	SYMBOL NAME	DISPLAYED BY NODE	NOTES
	2D Coordinate System		Green indicates the Y direction and red indicates the X direction.
	Distributed Force	Boundary Load Face Load Edge Load	Can be displayed together with the Distributed Moment symbol, depending on the values given in the node.
	Damping[1]	Spring Foundation	Can be displayed together with the Spring symbol, depending on the values given in the node.
	Distributed Moment[1]	Boundary Load Face Load Edge Load	Can be displayed together with the Distributed Force symbol, depending on the values given in the node.
	Fixed Constraint	Fixed Constraint	
	No Rotation[1]	No Rotation	
	Pinned[1]	Pinned	
	Point Force	Point Load	Can be displayed together with the Point Moment symbol, depending on the values given in the node.
	Point Mass[1]	Point Mass	
	Point Moment[1]	Point Load	Can be displayed together with the Point Force symbol, depending on the values given in the node.
	Prescribed Displacement	Prescribed Displacement	
	Prescribed Velocity[1]	Prescribed Velocity	
	Prescribed Acceleration[1]	Prescribed Acceleration	
	Rigid Connector[1]	Rigid Connector	A line is drawn to each connected boundary,
	Roller	Roller	
	Spring[1]	Spring Foundation Thin Elastic Layer	Can be displayed together with the Damping symbol, depending on the values given in the node.
	Symmetry	Symmetry	
	Thin-Film Damping[2]	Thin-Film Damping	

[1] Requires the Structural Mechanics Module
[2] Requires the MEMS Module

ABOUT COORDINATE SYSTEMS AND PHYSICS SYMBOLS

Physics symbols connected to a node for which input can be given in different coordinate systems are shown together with a coordinate system symbol. This symbol is either a triad or a single arrow. The triad is shown if data are to be entered using vector components, as for a force. The single arrow is displayed when a scalar value, having an implied direction, is given. An example of the latter case is a pressure.

In both cases, the coordinate directions describe the direction in which a positive value acts. The coordinate direction symbols do not change with the values actually entered for the data.

Physics symbols are in most cases displayed even if no data values have been entered in the node.

In some cases, a single feature can display more than one symbol. An example is the Point Load node in the Beam interface, which can display either the Point Force symbol ( ), the Point Moment symbol ( ), or both, depending on the data entered. In those cases, no symbol is shown until nonzero data is entered.

For cases when physics symbol display is dependent on values given in the node, it can be necessary to move to another node before the display is updated on the screen.

DISPLAYING PHYSICS SYMBOLS IN THE GRAPHICS WINDOW — AN EXAMPLE

1 Add a physics interface, for example, **Solid Mechanics**, from the **Structural Mechanics** branch.

2 In the Solid Mechanics node's Settings window, under **Physics Symbols**, select the **Enable physics symbols** check box and then click the **Select All** button.

3 Add any of the feature nodes listed in Table 3-5 to the physics interface. Availability is based on license and physics interface.

The physics symbols also display for any multiphysics interface that includes Structural Mechanics feature nodes or other physics feature nodes with symbols.

4 When adding the boundary, edge, or point (a geometric entity) to the **Selection** list in the feature **Settings** window, the symbol displays in the **Graphics** window. See Figure 3-10 and Figure 3-11.

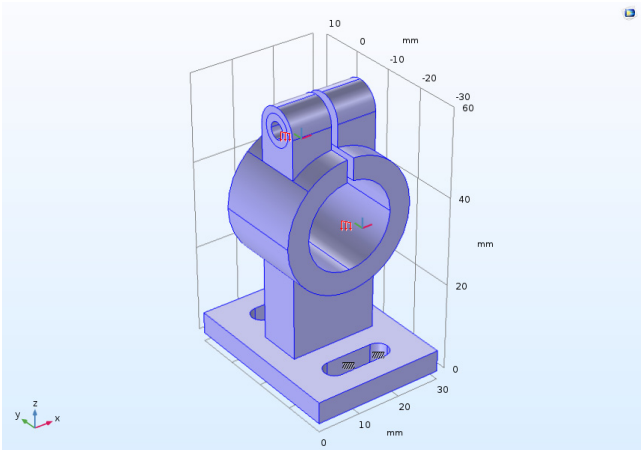

Figure 3-10: Example of Boundary Load physics symbols as displayed in the COMSOL Multiphysics model "Deformation of a Feeder Clamp".

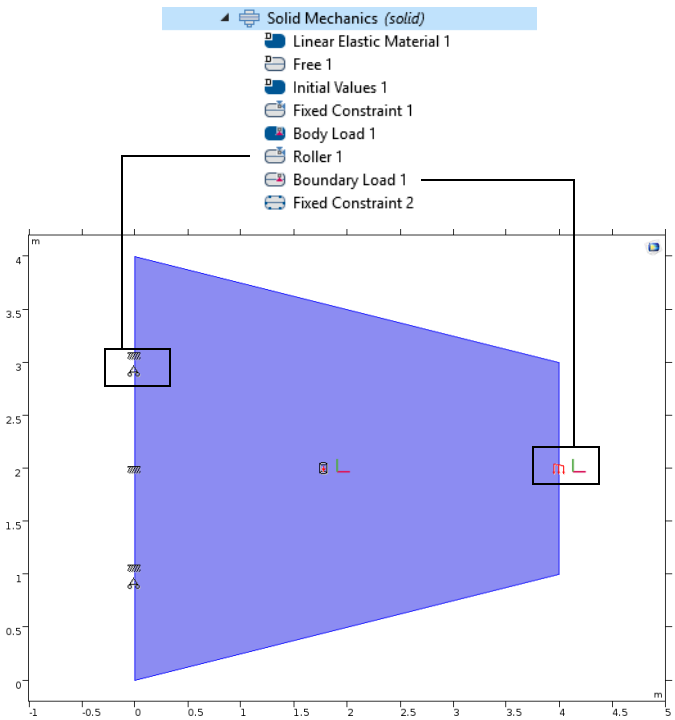

Figure 3-11: Example of Roller and Boundary Load physics symbols as displayed in the COMSOL Multiphysics model "Tapered Cantilever".

Errors and Warnings

COMSOL Multiphysics reports problems of two types: errors and warnings.

ERRORS

Errors prevent the program from completing a task. For errors, a **COMSOL Error** window appears with a brief error description and, in some cases, an **Open Log File** button for additional information. Under the node where the error occurred there is, in most cases, also an **Error** subnode ( ) that contains an error message that generally provides

additional information. Also, for many error types, the icon for the node where the error occurred appears with a red cross in the lower-right corner. For some errors there is also a link to more diagnostic information on the COMSOL website.

LICENSE ERRORS

It is possible to open and postprocess models that include functionality that you have blocked or that your license does not include. Nodes with functionality that requires a license for a product that is blocked or not available get a **License Error** subnode ( ), where you find information about the missing but required product license. Unless you disable or remove such nodes, it is not possible to re-solve such models.

	Some specialized plot types require a license for an add-on product and are then also unavailable if you postprocess models that include such plots and your license does not include the required product.

	It is not possible to open models that require a license for the Material Library, ECAD Import Module, CAD Import Module, LiveLink™ *for* MATLAB®, or any of the CAD LiveLink™ products if your license does not include this required product.

WARNINGS

Warnings are problems that do not prevent the completion of a task but that might affect the accuracy or other aspects of the model. Warnings typically appear in the **Log** window ( ). The warning message also appears as a **Warning** subnode ( ) under the node from which the warning was sent.

INDICATION OF UNEXPECTED, UNKNOWN, OR INCONSISTENT UNITS

The unit display appears orange for the properties in the settings for the physics interface, physics features, and materials that have invalid or inconsistent units or a different unit than expected.

Inconsistent Units

An inconsistent unit can occur by summing terms with units that represent different physical quantities, such as `273[K]+3[ft]`. A tooltip displays a message at the corresponding field.

Unexpected Unit of Input

In the case of a valid but unexpected unit, this message contains the deduced and expected units in the current unit system.

Unknown Unit

This message appears when a unit bracket contains invalid units.

Syntax Errors

A unit display that appears red contains a syntax error, which can be due to, for example, missing or misplaced parentheses.

Evaluating Unexpected or Inconsistent Units

If an unexpected or inconsistent unit appears in a text field for a physical property, the COMSOL Multiphysics software ignores the unit and uses the numerical value, including an SI prefix if present, as the input to the model. For example, in a text field for density using SI units, the software interprets `2930[K]` as 2930 kg/m^3 and `2930[mK]` as 2.930 kg/m^3.

ERRORS AND WARNINGS IN A GEOMETRY SEQUENCE

If an error occurs when you build a node, the build stops. The node with the problem then gets an **Error** subnode ( ) that contains the error message. Also, the node's icon displays with a red cross in the lower-left corner.

After a successful build of a node, a warning message can sometimes display as a **Warning** subnode ( ). If a warning message exists, the node's icon displays with an orange triangle in the lower-right corner.

ERRORS AND WARNINGS IN MESHING SEQUENCES

If a problem occurs when you build a node, the build continues if it is possible; otherwise, the build stops. Continuing means that geometric entities where the operation failed are skipped and the problems are reported as **Error** subnodes ( ) under the operation node. The build process continues with remaining nodes in the meshing sequence.

When the building of the meshing sequence is completed, the error window appears to show the first error reported. If there are several errors, you have to inspect the sequence for nodes with a Warning status and corresponding **Error** nodes to find all errors. If a node has a Warning status, the node's icon includes an orange triangle in the lower-right corner (see Dynamic Nodes in the Model Builder).

In some cases, you get a **Warning** node ( ) even though meshing completed successfully. This happens, for example, when geometric entities are much smaller that the desired mesh element size, and you should interpreted the warning as a hint that the geometry needs to be simplified to avoid an unnecessarily fine mesh.

	The **Error** and **Warning** nodes and their subnodes often contain selections that highlight where the problem is located in the geometry.

If meshing cannot continue, all building stops and the node gets an Error status, which the program indicates by adding a red cross in the lower-right corner of the node's icon. You find information about the error in an **Error** subnode ( ) of the node where the error occurred. If the node is part of a sequence build, the build stops and the preceding node becomes the current node.

ERRORS AND WARNINGS IN SOLVER SEQUENCES

Issues encountered when running a solver or generating a mesh are treated in two different ways depending on if it is possible to avoid the problem and continue the operation or if the operation must be stopped. In the first case, a **Warnings** node ( ) appears under the node in the model tree that caused the problem. In the second case, an **Error** node ( ) appears under the node in the model tree that caused the error.

A **Warnings** node ( ) can also appear under a **Compile Equations** node if some input to the solvers uses inconsistent units, for example.

WARNINGS DURING POSTPROCESSING

For things like empty plots, **Warnings** nodes ( ) can appear in the **Results** branch during postprocessing. However, you do not get any warnings in these cases:

- Plotting with the **Dataset** list set to **None** or a dataset that cannot be evaluated (for example, because the model does not contain any solution).
- Plotting without having set any expressions.

	If you still have problems, contact technical support from the Support Center page at www.comsol.com/support.

	• Using Units • Unit Systems • Dynamic Nodes in the Model Builder

Modeling Development Tools

Overview

In addition to the available functionality in COMSOL Multiphysics and the add-on products included in your license, you can add custom functionality by defining methods and settings forms and by combining them into add-ins for general use in any model. There are also built-in tools for comparing the contents of two models. All this functionality is available from the **Developer** toolbar (see Developer Toolbar). There is also an Add-in Libraries window for adding existing add-ins to a model. See the following sections for more information:

- Creating and Running Methods in Models
- Method Calls
- Creating and Using Settings Forms and Dialogs
- Creating Add-ins
- The Add-in Libraries Window
- Comparing Models and Applications

Creating and Running Methods in Models

You can use the method editor capabilities in the Application Builder to create methods that you can run to automate or extend operations in the **Model Builder** tree such as creating a geometry or running some special solver sequence. To add a method, go to the **Developer** ribbon and click **New Method** ( ) in the **Create Methods** section. In the **New Method** window, specify a method name in the **Name** field and click **OK**. The Application Builder then opens, and the new model method appears under **Methods** ( ) in the **Application Builder** tree. You can then record or write code for the method in the model editor window. See the Application Builder documentation for more information about methods. By default, the **Show in Model Builder** check box is selected in the settings for the **Method** node. All methods with that check box selected appear under **Run Method** in the **Model Builder**.

To run a method in the Model Builder, click **Run Method** ( ) in the **Run Methods** section and choose the method to run. The Model Builder tree is updated according to the changes that the method includes. Click **Stop** (■) to stop a running method to debug it, for example. You can open the **Debug Log** window from the **Windows** menu to view debug information. You can also add breakpoints for debugging purposes. You can also click **Run Method Call** ( ) to run a method call in a **Method Call** node (see Method Calls below). Method calls support input arguments for the model methods, so that you, for example, can use two instances of the same model method with different input values. Model methods with inputs are not available for **Run Method**. For methods without inputs, running a method directly or through a method call is equivalent.

	Make sure that the model tree is in a state that is compatible with the method that you run. Otherwise, the method code may not work or may produce unexpected results. Also, there is no undo operation after running a model method.

	See the *Introduction to Application Builder* for an example of a model method and the *Application Builder Reference Manual* for information about the **Model Method** node and about creating and debugging methods in general.

Method Calls

You can add any available model method as a **Method Call** node ( ), which appears under **Global Definitions**. If the **Group by Type** option is enabled, the **Method Call** nodes are grouped under the **Method Calls** node ( ). In the **Settings** window, the model method that this **Method Call** node calls is listed as, for example, **Model method: modelmethod1**.

At the top of the **Settings** window, click the **Run** button ( ) or press F8 to run the model method for this method call. Click the **Stop** button (■) to stop a running model method (this button is unavailable if a model method is not running).

Click the **Edit Method** button ( ) to open the model method in a method editor window in the Application Builder, where you can make changes and additions to the model method.

You can also right-click the **Method Call** node and choose **Run** (or press F8) or **Edit Method** .

The **Method Call** node's **Settings** window includes the following section:

INPUTS

In this section, any inputs that you have defined for the model method appear, using the input's description as the label and a text field for entering a value for the input (the text field contains a default value if it has been defined for that input). If the input is a Boolean, it appears as a check box instead. If the input is a 2D array, Array 1D Boolean, or Array 1D String, it is shown as a table, where you can add values and add rows and columns as applicable. Contrary to running model methods directly, method calls can use model methods with inputs defined in the **Settings** window for model methods in the Application Builder. That way you can, for example, use multiple instances of a model method with different input values.

Creating and Using Settings Forms and Dialogs

Forms that you create in the Application Builder can also be used as settings forms in the **Model Builder** tree that can provide customs settings connected to methods for performing some special task in a model. Such forms become available in the **Model Builder** if you select the **Show in Model Builder** check box. You can add them as nodes in the **Forms** section of the **Developer** toolbar by choosing them from the **Settings Form** list ( ). That form is then added as a **Settings Form** node under **Global Definitions** (or **Global Definitions>Settings Forms**, if **Group by Type** is active).

You can also show such forms as modal dialog boxes by choosing them from the **Show Dialog** list (in the **Forms** section of the **Developer** toolbar.

	Forms that include Graphics objects cannot be used as settings form or dialog boxes. Instead you can plot in the main **Graphics** window or in other plots windows using the built-in `selectNode` method or the `window` property for a plot group.

To make use of the latest definition of a form in the Application Builder when it is shown in the Model Builder, click the **Update Forms** button ( ) in the **Forms** section of the **Developer** toolbar, which updates all settings forms' features. You can also click the **Update** button ( ) in the in the **Settings** window for a **Settings Form** node to update that particular settings form.

Click the **Edit Form** button ( ) the in the in the **Settings** window for a **Settings Form** node to move to its form editor window in the Application Builder.

See the Application Builder documentation for more information about creating forms and methods.

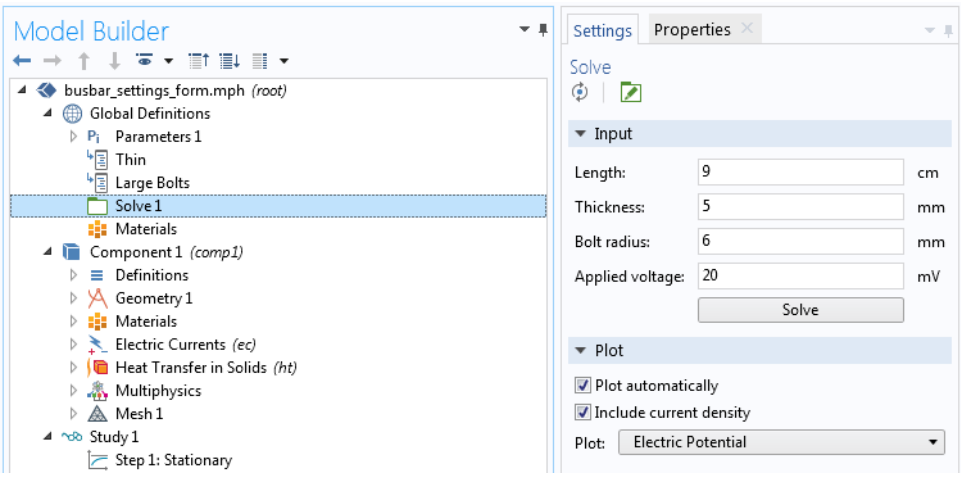

Figure 3-12: An added settings form under Global Definitions provides custom settings.

Creating Add-ins

Add-ins, or add-in programs, are extensions to the COMSOL Multiphysics software and make it possible to share methods and settings forms between several models. An add-in consists of a regular COMSOL Multiphysics MPH-file in which you have added forms and methods using the Application Builder to provide a settings window with some functionality that can simplify or extend the built-in functionality in the COMSOL Multiphysics software for some application that might be useful for a range of model files. You can collect add-ins into a user-defined add-in library (see The Add-in Libraries Window below). Opening the add-ins that are included in the COMSOL Multiphysics as MPH-files from the file system makes it possible to study the forms and methods in the Application Builder. See the Application Builder documentation for more information about how to create an add-in in the Application Builder and general information about forms and methods.

Using Add-ins

To use an add-in in the current model, choose it from the **Add-ins** list ( ) on the **Developer** ribbon toolbar. The add-in will then be added to the current model under **Global Definitions**. To add an add-in to the **Add-ins** list, select it in the **Add-in Libraries** window (see below). Once the add-in is available under **Global Definitions**, it works like any other node with a **Settings** window. Depending on its contents, it will affect the model by some functionality contained in the add-in.

The Add-in Libraries Window

The **Add-in Libraries** window contains available add-ins, which you can browse and add to the **Model Builder** by selecting the check box for the add-in and then click **Done**. This way, you enable the add-in so that it becomes available from the **Add-ins** menu. When you choose the add-in from that menu, it is imported and the selected form is added or a selected method is run. You can also make add-ins available by importing them without adding any

form or running any methods. To do so, right-click an add-in and choose **Import Add-in**. Imported add-ins are also available from the **Add-ins** menu. If the add-in includes documentation, click the **Open PDF Document** button underneath the add-in description, or right-click the add-in and choose **Open PDF Document**.

Click the **Refresh** button ( ) to update the list of add-ins. You can also add separate user-defined add-in libraries (see below).

ADD-IN LIBRARY PREFERENCES

The following settings can be modified using the buttons at the bottom of the **Add-in Libraries** tree on the **Add-in Libraries** page in The Preferences Dialog Box and — if the **Allow managing libraries in the Add-in Libraries window** check box on that page is selected (the default) — also in the **Add-in Libraries** window itself.

Add User Add-in Library

Click the **Add User Add-in Library** button ( ) to add customized folders. In the **Add User Add-in Library** dialog box, navigate to a location on your computer and select an existing directory or click **Make New Folder** to create a custom folder. Click **OK** to save the changes and exit, or **Cancel** to exit without saving. The user-defined add-in library appears alongside the built-in add-in libraries,

	It is not possible to add an add-in library identical to, containing, or being contained in, an already used add-in library.

Optionally, you can replace the standard folder icon ( ) with custom icons of your choice that reflect the content of your library folders. To use a custom icon for a folder, create a PNG-file with an image size of 16-by-16 pixels and save it in the folder under the name `folder.png`.

Set the COMSOL Add-in Libraries Root

Click the **Set COMSOL Add-in Libraries Root Directory** button ( ) to edit or set the root folder. This redirects the COMSOL software to a different folder where customized add-ins can be stored.

In the **Set COMSOL Add-in Libraries Root Directory** dialog box, navigate to the new root folder location or click **Make New Folder**. Click **OK** to save the changes and exit, or **Cancel** to exit without saving.

Remove Selected Library

This button is enabled after a user add-in library folder has been created. Select a user add-in library root folder in the **Add-in libraries** tree and then the click the **Remove Selected** ( ) button to remove the library from the tree.

Comparing Models and Applications

It can be useful to compare two versions of the same model or application to get an overview of the differences between the two versions. To do so, click the **Compare** button ( ) in the **Compare** section of the **Developer** toolbar. A **Select Application** window then opens, where you can select the Model MPH-file (the remote file) to which you want to compare the current model in the COMSOL Desktop (the local file). A comparison then starts, and the results, if there are any differences, appear as a tree in the **Comparison Result** window. The comparison tool compares all the settings in the entire model, including visible and invisible settings in the Model Builder and the Application Builder.

THE COMPARISON RESULT WINDOW

At the top of the **Comparison Result** window there is a toolbar with the following buttons:

- **New Comparison** ( ), to make a new comparison. A **New Comparison** dialog box opens, where the default is that the **Use open file** check box is selected. Clear it to specify another **Local file**. Specify a **Remote file** and then click **OK** to perform a new comparison.

- **Update** ( ), to update the comparison
- **Collapse All** ( ) and **Expand All** ( ), to collapse or expand all branches in the comparison tree
- **Load Comparison from File** ( ), to load the results from another comparison from an XML-file.
- **Save Comparison to File** ( ), to save the results from the current comparison to an XML-file.
- **Show Next Difference** ( ), to move to the next difference in the tree with nodes that differ under **Differences**.
- **Show Previous Difference** ( ), to move to the previous difference in the tree with nodes that differ under **Differences**.

Under **Comparing files**, you find the file paths to the local model and the remote model. The local model is typically the model open in the COMSOL Desktop, and it can have been modified after the last save. The left column is called **Local file (Open application)** when the local model is the opened model or application. When the local model is a new model that has not yet been saved, the left column is called **Open application**.

Under **Differences**, you can use the **Filter results** list to control filtering with the options **No filter**, **Exclude all matching labels** (the default), and **Include all matching labels**. The entries in the **Regular expression** field define what node labels to filter. You can make the filtering case sensitive by selecting the **Case Sensitive** button ( ) box next to the list. The filter matching is done with regular expressions, and any label that contains a matching text will be either included or excluded. Filtering can be disabled by choosing **No filter** from the **Filter results** list. Click the **Show Only Active** button ( ) next to the list to exclude inactive settings from the comparison. Such settings are not actively used in the current model state and do not typically appear in the COMSOL Desktop.

The tree of nodes with differences has a structure according the structure of the underlying model object, not the Model Builder or Application Builder trees. This means that the hierarchy can be somewhat different compared to the hierarchy seen in the **Model Builder** and **Application Builder** windows. The comparison includes all nonbinary differences in the model object that can be saved to disk, with some exceptions. For nodes that correspond to a node in the Model Builder or Application Builder trees, double-click the node (or right-click and choose **Go to Source**) in the tree of nodes with differences to display the corresponding node in one of those trees in the local file. When applicable, you can also right-click a node and choose **Go to Remote Source** to display the corresponding node in one of those trees in the remote file.

Below is a list of consequences of this design:

- The tree can show differences not visible in the Model Builder because they come from inactive settings hidden by another setting.
- Some settings and nodes in the Model Builder are not saved in the model object and will therefore not show in a comparison (Mesh Statistics, for example).
- No binary data are compared, so, for example, no differences in the solution will trigger a difference in the comparison.

Selecting a node in the tree will update the table under **Comparing values** below the tree. This table shows the attributes of the selected node, both in the local model (**Local value** column) and the remote model (**Remote value** column). This table is particularly interesting for the nodes labeled **Attributes differ** because they show the values that differ. Parent nodes can also show the same differences but typically with a larger number of attributes that have the same local and remote values. For differences that contain long entries or large arrays, there is an option to show a more detailed difference in a separate window for a selected table. Either double-click the table row or click the **Detailed Comparison of Selected Attribute** button ( ) below the table to open the **Compare Attribute** window.

Working with Nodes in the Model Builder

This section describes how you can move, copy, paste, duplicate, disable and enable nodes in the model tree that describes the contents of a model in the **Model Builder** window. There is also information about undoing and redoing operations in the model tree.

Moving Nodes in the Model Builder

Many of the nodes under the branches and subbranches listed in Table 3-2 can be moved around in the model tree. To move nodes use one of these methods:

- Select one node at a time (or by Ctrl-clicking or Shift-clicking to select more than one node at a time), and use the mouse to drop them in another applicable position in the model tree. A horizontal line indicates where in the model tree the moved (or copied) nodes get inserted when releasing the mouse.
- Right-click the selected nodes and select **Move Up** (↑) or **Move Down** (↓). Nodes that are the first or last of its kind can only be moved down or up, respectively.
- Use the keyboard shortcuts Ctrl+up arrow or Ctrl+down arrow to move nodes up or down.
- You can also create custom grouping of nodes to organize the nodes in the model tree. See Custom Grouping of Nodes.

For physics interface nodes it is not possible to move the default nodes (for the default boundary condition, for example). It is possible to create a copy of a default node, which initially has no selection. To click-and-drag a default node creates a copy whether or not the Ctrl key is pressed.

The order of the nodes in some of the branches affects the evaluation of the sequence that they define. In the following branches and subbranches it is possible to move nodes up and down to control the evaluation of the sequence or the order in which they appear within the branch or subbranch (also see Table 3-2):

- Definitions: nodes can be moved relative to other nodes of the same type (functions, selections, and so on).
- Geometry: The Geometry Nodes.
- Materials: Material nodes.
- Mesh: Mesh nodes (see Meshing).
- Physics interfaces: except for the default nodes, the nodes for physics interfaces (such as material models, boundary conditions, domains, edges, points, and sources) can be moved within the physics interface branches (see The Physics Interfaces).
- Study: Study and study step nodes can be moved (see Study and Study Step Types).
- Results: the order of the nodes can be rearranged within each of the subbranches (Derived Values, Tables, Plot Groups, Export, and Reports). Exceptions under the Export node are the Plot, Mesh, and Table nodes (see Results Analysis and Plots).

Copying, Pasting, and Duplicating Nodes

It is possible to copy and paste many of the nodes in the Model Builder to create additional nodes with identical settings or to paste it into another model. That is, you can paste the node into a model in a new COMSOL Desktop

session. Some nodes can also be duplicated underneath the original node. You can also move, copy, and duplicate nodes using “drag-and-drop” of nodes in the Model Builder.

Duplicate ( ) is a convenient way to copy and paste in one step. In other words, it combines the **Copy** and **Paste** functions. When nodes are duplicated, the COMSOL Multiphysics software adds identical nodes underneath the original nodes on the same branch. You can duplicate most but not all nodes.

Nodes that can be copied (and duplicated) include the following:

- Functions, which are possible to copy from one **Definitions** or **Global Definitions** branch to another. Also see Functions and Global Definitions, Geometry, Mesh, and Materials.
- Variable utilities. Also see Matrices and Matrix Operations.
- Moving Mesh and Deformed Geometry nodes. See also Deformed Geometry and Moving Mesh.
- Material nodes. Also see Materials.
- Nodes for lighting and hiding in the **View** branch. Also see User-Defined Views.
- Physics and multiphysics feature nodes, which can be copied within the same physics interface or to another identical physics interface. You can also copy an entire physics interface to another model, for example. Also see The Physics Interfaces.
- Geometry sequences, for which there are two ways to copy and paste geometry objects. Using the Transforms>Copy operation (that keeps the nodes linked to one another), or a standard copy and paste (see Copying and Pasting Geometry Objects). It is also possible to copy, paste, and duplicate nodes corresponding to operation features, such as the Union node.
- Study steps, which are possible to copy from one **Study** branch to another. Also see Studies and Solvers.
- Derived value nodes. Also see Derived Values, Evaluation Groups, and Tables.
- Export nodes. Also see Exporting Data and Images.
- Plot nodes, which are possible to copy from one plot group to another, and their attributes (subnodes). Also see Plot Groups and Plots.

The copied object must be pasted into a model component with the same space dimension. For example, a Sphere can only be pasted into a 3D model.

HOW TO COPY, PASTE, OR DUPLICATE NODES

- On the Quick Access Toolbar (Windows users) or from the main **Edit** menu (macOS and Linux users), click **Copy** ( ), **Paste** ( ), or **Duplicate** ( ).
- Right-click a node and select **Copy**, **Paste**, or **Duplicate**.
- To paste a node, and after selecting **Copy**, click the parent node and right-click to select **Paste Heat Flux** to paste a copied node (a Heat Flux node in this case) to the parent node’s branch.

- Create a copy of a node by Ctrl-clicking it and dragging a copy to an applicable location. A small plus sign at the cursor indicates that you drag a copy of the selected node.
- Ctrl-click and drag a duplicate to an applicable location. A small plus sign at the cursor indicates that you drag duplicates of the selected nodes.

	Some nodes, typically default nodes in some physics interfaces, are so-called singleton nodes; that is, there can only be one such node in one and the same physics interface, and it may in some cases be created automatically. Such nodes, such as the **Gravity** node in fluid-flow interfaces when the license includes the CFD Module or Heat Transfer Module, when copied, are not possible to paste into the model.

Undoing and Redoing Operations

	Undo is not possible for nodes that are built directly, such as geometry objects, solutions, meshes, and plots.

It is possible to undo the last operation for operations like adding, disabling, moving, and deleting nodes in the **Model Builder** as well as changing values in the **Settings** window. You can undo or redo several successive operations.

To undo the last operation or redo an undone operation:

- On the Quick Access Toolbar (Windows users) or from the main **Edit** menu (macOS and Linux users), select or click **Undo** ( ) or **Redo** ( ).
- Press Ctrl+Z (undo) or Ctrl+Y (redo).

	• Copying, Pasting, and Duplicating Nodes • Clearing Sequences and Deleting Sequences or Nodes • Disabling or Enabling Nodes

Going to the Source Node

In the **Settings** window for many nodes, other nodes can be referenced in the model tree such as a component, solution, study or study step, or dataset, which provide data to the node where they are referenced.

Nodes where you refer to other nodes include plot groups, datasets, and solvers; in such nodes' **Settings** windows, click the **Go to Source** button ( ) to move to the node that the selection in the list next to the button refers to.

	• Settings and Properties Windows for Feature Nodes • Studies and Solvers • Results Analysis and Plots

Clearing Sequences and Deleting Sequences or Nodes

You can change the contents, and actions, of the sequences in the model tree by clearing a meshing sequence or solution under a solver configuration, or delete nodes in the Model Builder.

> **Undo** is not possible for nodes that are built directly, such as geometry objects, meshes, solutions, and plots.

CLEAR OR DELETE A MESH

Use a **Clear** function to keep the nodes and be able to recreate the mesh by rebuilding the meshing sequence.

Under the **Component** node where you want to clear or delete the mesh:

- In the **Mesh** toolbar, click **Clear Mesh** ( ) or right-click the **Mesh** node and select **Clear Mesh** ( ).
- To delete a meshing sequence, in the **Mesh** toolbar click **Delete Sequence** ( ) or right-click the **Mesh** node and select **Delete Sequence** ( ).
- If you have a model geometry with several meshes, you can clear all meshes at the same time. From the **Mesh** toolbar, click **Clear All Meshes** ( ).

CLEAR OR DELETE A SOLUTION

Use a **Clear** function to keep the nodes and be able to recreate the solution by computing the solution again.

- To clear a set of solutions under a specific study, from the **Study** toolbar, click **Clear Solutions** ( ) or right-click the **Study** node and select **Clear Solutions** ( ).
- To delete all solver nodes, right-click the **Solver Configurations** node and select **Delete Configurations** ( ). You can also choose whether or not to remove the Results nodes (datasets and plots, for example) associated with the solver configuration.
- If you have a model geometry with several studies, you can clear all solutions in all studies at the same time. From the **Study** toolbar, click **Clear All Solutions** ( ).

DELETE NODES

- To delete selected nodes, right-click the nodes and select **Delete** ( ) or press Del (the Delete key). Confirm the deletion of nodes for it to take effect. Also see Clear or Delete a Mesh.
- To delete a geometry sequence, in the **Geometry** toolbar click **Delete Sequence** ( ) or right-click the **Geometry** node and select **Delete Sequence** ( ). You cannot use the **Undo** command.
- To delete geometry objects or entities, in the **Geometry** toolbar click **Delete** ( ) or right-click **Geometry** and select **Delete** ( ). Or select objects in the **Graphics** window, and click the **Delete** button ( ) in the **Graphics** window toolbar.

If you use the **Delete** button to delete objects, the software deletes the selected objects that correspond to primitive features by deleting their nodes from the geometry sequence. If you delete objects that do not correspond to primitive features or if you delete geometric entities, a **Delete Entities** node appears in the sequence.

Disabling or Enabling Nodes

A disabled node does not take part in the evaluation of a sequence; see Figure 3-6. Some nodes, such as container nodes and default nodes in the physics interfaces (see Physics Interface Default Nodes), cannot be disabled (or deleted). When this is the case, the context menu does not have these options available. You can use Shift-click and Ctrl-click to select multiple nodes that you want to delete, disable, or enable.

- To disable selected nodes, right-click and select **Disable** ( ) or press F3. The nodes are unavailable (dimmed) in the model tree to indicate that they are disabled. For a geometry or meshing sequence, disabled nodes do not affect the finalized geometry or mesh.
- To enable disabled nodes, right-click and select **Enable** ( ) or press F4.

	Instead of disabling and enabling variables and physics nodes to simulate different analysis cases (using different boundary conditions or sources, for example), use the selection of variables and physics interfaces in the study steps' **Physics and Variables Selection** sections, or use *load cases* for solving cases with varying loads or constraints. See Physics and Variables Selection and Using Load Cases.

Modeling Guidelines

To model large-scale problems and for successful modeling in general, the COMSOL Multiphysics software makes it possible to tune solver settings and to use symmetries and other model simplifications to reach a solution or — failing that — interrupt the solution process to retrieve a partial solution. This section provides some tips and guidelines when modeling.

Selecting Physics Interfaces

When creating a model in COMSOL Multiphysics, you can select a single physics interface that describes one type of physics or select several physics interfaces for multiphysics modeling and coupled-field analyses.

MODELING USING A SINGLE PHYSICS INTERFACE

Most physics interfaces contain Stationary, Eigenvalue, and Time Dependent (dynamic) study types. As already mentioned, these physics interfaces provide features and windows where you can create models using material properties, boundary conditions, sources, initial conditions, and so on. Each physics interface comes with a template that automatically supplies the appropriate underlying equations.

If you cannot find a physics interface that matches a given problem, try one of the interfaces for PDEs, which makes it possible to define a custom model in general mathematical terms using equation-based modeling. Indeed, the COMSOL Multiphysics software can model virtually any scientific phenomena or engineering problems that originate from the laws of science.

MULTIPHYSICS MODELING USING MULTIPLE PHYSICS INTERFACES

When modeling real-world systems, you often need to include the interaction between different kinds of physics: *multiphysics*. For instance, an electric current produces heat, and the properties of an electronic component such as an inductor vary with temperature. To solve such a problem, combine two or several physics interfaces into a single model using the program's multiphysics capabilities. For the example just mentioned, you can use the predefined Joule Heating multiphysics coupling, which is a combination of the Electric Currents and Heat Transfer interfaces. This way you create a system of two PDEs with two dependent variables: V for the electric potential and T for the temperature. There are many other predefined multiphysics couplings that combine two or more coupled physics interfaces for common multiphysics applications. If you have added physics interfaces for which predefined multiphysics couplings exist, they are available in the **Add Multiphysics** window (see The Add Multiphysics Window).

You can also combine physics interfaces and equation-based modeling for maximum flexibility.

To summarize the proposed strategy for modeling processes that involve several types of physics: Look for physics interfaces suitable for the phenomena of interest. If you find them among the available physics interfaces, use them; if not, add one or more interfaces for equation-based modeling.

When coupling multiple physics interfaces in a multiphysics model (without using a predefined multiphysics interface), the couplings can occur in domains and on boundaries. The COMSOL Multiphysics software recognizes some common multiphysics couplings, which then appear under the **Multiphysics** node. The program also automatically identifies potential *model inputs* for quickly forming couplings between physics interfaces. For example, a velocity field from fluid flow is a model input for convective heat transport in heat transfer. In that case, the model input automatically transfers the velocity field from the fluid to the heat transfer part.

Multiphysics Modeling Workflow

Using Symmetries

By using symmetries in a model you can reduce its size by half or more, making this an efficient tool for solving large problems. This applies to the cases where the geometries and modeling assumptions include symmetries.

The most important types of symmetries are axial symmetry, symmetry planes or lines, and antisymmetry planes or lines:

- *Axial symmetry* is common for cylindrical and similar 3D geometries. If the geometry is axisymmetric, there are variations in the radial (r) and vertical (z) direction only and not in the angular (θ) direction. You can then solve a 2D problem in the rz-plane instead of the full 3D model, which can save considerable memory and computation time. Many physics interfaces are available in axisymmetric versions and take the axial symmetry into account. During postprocessing, you can revolve the 2D axisymmetric solution to view the results in 3D.
- *Symmetry and antisymmetry planes or lines* are common in both 2D and 3D models. *Symmetry* means that a model is identical on either side of a dividing line or plane. For a scalar field, the normal flux is zero across the symmetry line. In structural mechanics, the symmetry conditions are different. *Antisymmetry* means that the loading of a model is oppositely balanced on either side of a dividing line or plane. For a scalar field, the dependent variable is 0 along the antisymmetry plane or line. Structural mechanics applications have other antisymmetry conditions. Many physics interfaces have symmetry conditions directly available as nodes that you can add to the model tree.

To take advantage of symmetry planes and symmetry lines, all of the geometry, material properties, and boundary conditions must be symmetric, and any loads or sources must be symmetric or antisymmetric. You can then build a model of the symmetric portion, which can be half, a quarter, or an eighth of the full geometry, and apply the appropriate symmetry (or antisymmetry) boundary conditions.

Effective Memory Management

Especially in 3D modeling, extensive memory usage requires some extra precautions. First, check that you have selected an iterative linear system solver. Normally you do not need to worry about which solver to use because the physics interface makes an appropriate default choice. In some situations, it might be necessary to make changes to the solver settings and the model. For details about solvers, see the Studies and Solvers chapter.

ESTIMATING THE MEMORY USE FOR A MODEL

Out-of-memory messages can occur when the COMSOL Multiphysics software tries to allocate an array that does not fit sequentially in memory. It is common that the amount of available memory seems large enough for an array, but there might not be a contiguous block of that size due to memory fragmentation.

In estimating how much memory it takes to solve a specific model, the following factors are the most important:

- The number of node points
- The number of dependent and independent variables
- The element order
- The sparsity pattern of the system matrices. The sparsity pattern, in turn, depends on the shape of the geometry and the mesh but also on the couplings between variables in a model. For example, an extended ellipsoid gives sparser matrices than a sphere.

The MUMPS and PARDISO out-of-core solvers can make use of available disk space to solve large models that do not fit in the available memory.

You can monitor the memory use in the lower-right corner of the COMSOL Desktop, where the program displays the amount of physical memory and total virtual memory used (see Information About Memory Use).

CREATING A MEMORY-EFFICIENT GEOMETRY

A first step when dealing with large models is to try to reduce the model geometry as much as possible. Often you can find symmetry planes and reduce the model to half, a quarter, or even an eighth of the original size. Memory usage does not scale linearly but rather polynomially (Cn^k, $k > 1$), which means that the model needs less than half the memory if you find a symmetry plane and cut the geometry size by half. Other ways to create a more memory-efficient geometry include:

- Avoiding small geometry objects where not needed and using Bézier curves instead of polygon chains.
- Using linear elements if possible (this is the default setting in some physics interfaces). See Selecting an Element Type.
- Making sure that the mesh elements are of a high quality. Mesh quality is important for iterative linear system solvers. Convergence is faster and more robust if the element quality is high.
- Avoiding geometries with sharp, narrow corners. Mesh elements get thin when they approach sharp corners, leading to poor element quality in the adjacent regions. Sharp corners are also unphysical and can lead to very large (even infinite, in theory) stress concentrations.

INFORMATION ABOUT MEMORY USE

In the lower-right corner of the COMSOL Desktop is information about how much memory the COMSOL Multiphysics software is currently using. The two numbers in Figure 3-13 displayed as **1.24 GB | 1.26 GB** represent the physical memory and the virtual memory, respectively. If you position the cursor above these numbers, the tooltip includes the numbers with the type of memory explicitly stated:

- The **Physical memory** number is the subset of the virtual address space used by COMSOL Multiphysics that is physically resident; that is, it is the amount of physical memory (RAM) in "active" use.
- The **Virtual memory** number is the current size of the virtual address space that the COMSOL Multiphysics software uses.

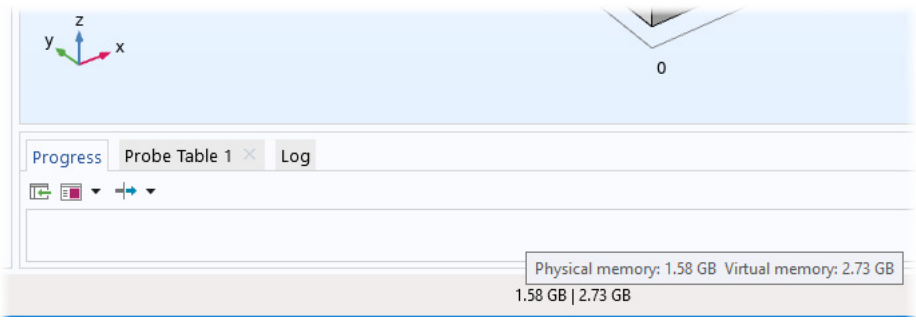

Figure 3-13: An example of memory use displayed in the COMSOL Desktop.

Selecting an Element Type

As the default element type for most physics interfaces and features, the COMSOL Multiphysics software uses first-order or second-order Lagrange elements (shape functions). Second-order elements and other higher-order elements add additional degrees of freedom on midpoint and interior nodes in the mesh elements. These added degrees of freedom typically provide a more accurate solution but also require more memory due to the reduced sparsity of the discretized system and the added number of degrees of freedom (DOFs). For many application areas, such as stress analysis in solid mechanics, the increased accuracy of a second-order element is important because quantities such as stresses involve space derivatives and become constant within an element when using first-order elements.

COMSOL recommends that you use the default element types. For some applications, it might be possible to use a lower-order element than the default element type, but you must then use care to ensure that the important quantities are resolved.

For information about editing shape functions, see Equation View.

Analyzing Model Convergence and Accuracy

It is important that the numerical model accurately captures local variations in the solution such as stress concentrations. In some cases you can compare your results to values from handbooks, measurements, or other sources of data. Many Applications Libraries examples are *benchmark models* that include comparisons to established results or analytical solutions.

If a model has not been verified by other means, a *convergence test* is useful for determining if the mesh density is sufficient. Here you refine the mesh and run the study again, and then check if the solution is converging to a stable value as the mesh is refined. If the solution changes when you refine the mesh, the solution is mesh dependent, so the model requires a finer mesh. You can use adaptive mesh refinement, which adds mesh elements based on an error criterion, to resolve those areas where the error is large. See the "Stresses and Strains in a Wrench" model in the *Introduction to COMSOL Multiphysics* book for an example of a convergence test.

For convergence, it is important to avoid singularities in the geometry.

Avoiding Singularities and Degeneracies in the Geometry

Achieving Convergence When Solving Nonlinear Equations

Nonlinear problems are often difficult to solve. In many cases, no unique solution exists. The COMSOL Multiphysics software uses a Newton-type iterative method to solve nonlinear systems of PDEs. This solution method can be sensitive to the initial estimate of the solution. If the initial conditions are too far from the desired solution, convergence might be impossible, even though it might be simple from a different starting value.

You can do several things to improve the chances for finding the relevant solutions to difficult nonlinear problems:

- Provide the best possible initial values.
- Solve sequentially and iterate between single-physics equations; finish by solving the fully coupled multiphysics problem when you have obtained better starting guesses.
- Ensure that the boundary conditions are consistent with the initial solution and that neighboring boundaries have compatible conditions that do not create singularities.
- Refine the mesh in regions of steep gradients.
- For convection-type problems, introduce artificial diffusion to improve the numerical properties. Most physics interfaces for modeling of fluid flow and chemical species transport provide artificial diffusion as part of the default settings.
- Scaling can be an issue when one solution component is zero. In those cases, automatic scaling might not work.
- Turn a stationary nonlinear PDE into a time-dependent problem. Making the problem time-dependent generally results in smoother convergence. By making sure to solve the time-dependent problem for a time span long enough for the solution to reach a steady state, you solve the original stationary problem.

- Use the parametric solver and vary a material property or a PDE coefficient starting from a value that makes the equations less nonlinear to the value at which you want to compute the solution. This way you solve a series of increasingly difficult nonlinear problems. The solution of a slightly nonlinear problem that is easy to solve serves as the initial value for a more difficult nonlinear problem.
- The residual operator can provide insight into the location and development of the algebraic residual in models with convergence issues.

- Stabilization Techniques
- Convergence Plots
- Introduction to Solvers and Studies

Avoiding Strong Transients

If you start solving a time-dependent problem with initial conditions that are inconsistent, or if you use boundary conditions or sources that switch instantaneously at a certain time, you induce strong transient signals in a system. The time-stepping algorithm then takes very small steps to resolve the transient, and the solution time might be very long, or the solution process might even stop. Stationary problems can run into mesh-resolution issues such as overshooting and undershooting of the solution due to infinite flux problems.

Unless you want to know the details of the transients, start with initial conditions that lead to a consistent solution to a stationary problem. Only then turn on the boundary values, sources, or driving fluxes over a time interval that is realistic for your model.

In most cases, turn on your sources using a smoothed step over a finite time. What you might think of as a step function is, in real-life physics, often a little bit smoothed because of inertia. The step or switch does not happen instantaneously. Electrical switches take milliseconds, and solid-state switches take microseconds.

- Introduction to Solvers and Studies
- Stationary and Time Dependent

Physics-Related Checks and Guidelines

There are some important checks and guidelines that primarily apply to different areas of physics. Making these checks ensures that the model input is sufficient and increases the chances for successful modeling. See also the modeling sections of the documentation for the physics interfaces and the modules for more information related to modeling different physics.

FLUID FLOW AND TRANSPORT PHENOMENA

The following checks and guidelines primarily apply to fluid-flow modeling but also to modeling of other transport phenomena:

- If none of the boundary conditions include the pressure (most outlet conditions do, however), then you should specify the pressure at some point in the fluid domain. Without a specified pressure, the problem is underconstrained and it is difficult to get convergence.
- Make sure that the mesh if sufficiently fine, so that it contains at least 4–6 mesh elements across the thickness of a channel, for example.
- Make sure that the boundary conditions and the initial conditions match for time-dependent problems. For example, instead of starting with a full velocity on the wall, compared to a zero initial velocity field in the fluid,

ramp up the velocity with a smoothed step function or a ramp function that takes the inlet velocity from zero, which matches the initial value for the velocity field, to the full velocity. See Avoiding Strong Transients.

- For fluid-flow models it is important to estimate the flow regime (laminar or turbulent) using the Reynolds number, for example. If the flow is in the turbulent regime, a turbulence model is typically required.

ACOUSTIC, STRUCTURAL, AND ELECTROMAGNETIC WAVE PROPAGATION

For models that describe wave propagation, it is important to fully resolve the wave in both time and space. In practice that means using a maximum mesh element size that provides about 10 linear or five second-order elements per wavelength and also, for transient simulations, a fixed time step that is small enough.

STRUCTURAL MECHANICS

The following checks and guidelines primarily apply to modeling of structural mechanics:

- Make sure that the model is fully constrained. At a minimum, you typically need to constrain the model to avoid all rigid-body movement, which for a 3D solid mechanics model means 6 constraints for three translations and three rotations. Otherwise, the solution is not well defined and does not converge.

  The structural mechanics interfaces include a Rigid Motion Suppression feature, which eliminates all rigid-body movement. If you do not use that feature, it is not possible to add all 6 constraints in a single point, where you can constrain at most three translational degrees of freedom. For a 3D solid model you can use a "3–2–1 approach" to constrain 3 degrees of freedom at one point (a fixed constraint), 2 at another point, and 1 at a third point. To do so, select three convenient points (vertices) that are well separated. Then fix the first point in all three directions. Constrain the second point in the two directions orthogonal (normal) to the vector from point one to point two making sure that there is no restriction to deformation along the line from point one to point two. Finally, constrain the third point in a direction normal to the plane formed by the three points. To test this approach, the model should expand or contract under temperature loading and have small stresses throughout with no stress concentrations. The corresponding minimum constraints for a 2D model are a fixed constraint at one point for the 2 translational degrees of freedom and an additional constraint in one direction at another point to constrain the single rotational degree of freedom.
- Consider if you can assume that the material is linear elastic and that the deformations are small. If not, consider using a nonlinear material model.
- Avoid sharp corners in the geometry, which are unphysical and lead to unbounded stress concentrations.

Results With Unphysical Values

WHERE AND WHY DO UNPHYSICAL VALUES APPEAR?

In some models small unphysical values can occur due to numerical artifacts or other model-related reasons. Examples include:

- Negative concentrations in mass transfer.
- A temperature that is slightly higher than the initial condition in time-dependent heat transfer studies.
- Small reaction forces that appear in unloaded directions in structural mechanics models.
- Small negative gaps in a contact analysis.
- Small negative effective plastic strain values.
- Stresses above the yield limit for an ideally plastic material in solid mechanics.

Some reasons for why these unphysical values occur:

- Numerical noise is a common cause. When the values of the dependent variables approach zero, the numerical noise can become relatively significant and cause some of the results to be slightly negative even if that is not physically possible.
- Interpolation and extrapolation of values can cause some values to become unphysical. Take care when using interpolated data or a piecewise polynomial function to define a temperature-dependent material property, for example. If you allow extrapolation outside of the defined range of input values, the material property values may not be valid. Also, results for an elastoplastic material are correct (within some tolerance) at the integration points (Gauss points) inside the finite elements, but values might become unphysical when extrapolating the data to the element boundaries.

	The Plasticity feature is available as a subnode to a Linear Elastic Material with the Nonlinear Structural Materials Module.

- Discontinuities in the model is another source of, for example, small negative concentrations due to a discontinuous initial value. With an initial value that is zero along a boundary for convective transport models, for example, the physical interpretation is an initially sharp, gradually diffusing front moving away from the boundary. However, for the default shape function (second-order Lagrange elements), only continuous functions are admissible as solutions. COMSOL then modifies the discontinuous initial value before the time stepping can begin. This often results in a small dip in the solution at the start time. In the example model that the following figure shows, the concentration is locally slightly negative at $t = 0$:

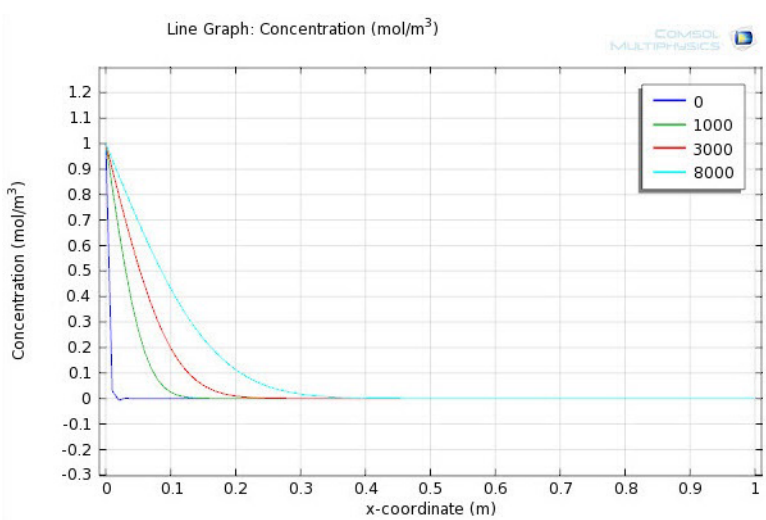

- Lack of mesh resolution is another cause of unphysical values such as negative concentrations. The resulting convergence problems are often the underlying issue when negative concentrations are observed in high convection regimes (high Peclet number) and in those with large reaction terms or fast kinetics (high Damkohler number).
- Incorrect physics in the model can also cause these types of problems. For mass transfer, for example, the use of a constant sink in a reaction term is an approximation that only works for large concentrations. When the concentration reaches zero, the reaction term continues to consume the species, finally resulting in a negative concentration.

AVOIDING UNPHYSICAL VALUES

This section contains some ways to avoid computing or displaying unphysical values:

- In some cases it is possible to add a baseline to the dependent variable so that the numerical noise does not affect the solution in the same way as when the values of the dependent variable approach zero. This scaling is not possible with, for example, a reaction term that depends on the concentration because then the scale and origin do matter.
- Avoid discontinuities in the model using, for example, smoothed step functions.
- Formulate logarithmic variables as a way of eliminating mesh resolution problems and negative dips using the logarithm of the original dependent variable (the concentration, for example) as the dependent variable. The reason for this is that a linearly varying mesh sometimes does not capture the exponential behavior of the changes in the dependent variable. Modeling the logarithm of the dependent variable also ensures that the real concentration, for example, cannot become negative during the solution process.
- Avoid displaying small unphysical values due to numerical noise by clipping the values for the plot. You can do this by plotting, for example, `c*(c>0)` instead of `c`, which evaluates to 0 everywhere where c is smaller than 0. You can also adjust the range of the plot data and colors to only show nonnegative values. Parts of the plots where values are outside the range then become empty.
- It can also be useful to check how the mesh affects the solution by refining the mesh and checking if the problem with unphysical values gets better or worse. If it gets better, then continue to refine the mesh. If it gets worse, you probably need to check the physics of the model.

Multiphysics Modeling Workflow

The ability to create multiphysics models — those with more than one type of physics or equation such as coupled-field problems — is one of the most powerful capabilities of COMSOL Multiphysics. In such models, the software can solve all the equations, taken from various areas of physics, as one fully coupled system.

Within the COMSOL software you can choose from several ways to work with multiphysics modeling and coupled-field analysis, including predefined multiphysics interfaces, predefined multiphysics couplings, and setting up user-defined multiphysics couplings using model inputs or expressions that include dependent variables or other expressions from another physics interface.

In this section:

- Creating a Multiphysics Model
- Advantages of Using the Predefined Multiphysics Interfaces
- The Add Multiphysics Window
- The Multiphysics Branch
- Uncoupling a Multiphysics Coupling
- Model Inputs and Multiphysics Couplings

Creating a Multiphysics Model

There are two ways to create and use the available predefined multiphysics couplings: using Predefined Multiphysics Interfaces or Adding Predefined Multiphysics Couplings to Physics Interfaces using The Add Multiphysics Window or in The Multiphysics Branch. You can also create multiphysics couplings, in the physics interface settings, using a model input or by directly typing an expression using a dependent variable from another physics interface, for example (see Specifying Equation Coefficients and Material Properties for information about what you can include in such expressions).

PREDEFINED MULTIPHYSICS INTERFACES

The Joule Heating Interface is an example of a predefined multiphysics interface. Many other multiphysics interfaces are available depending on the products included in your COMSOL license. After **Joule Heating** is selected from The Model Wizard, the **Heat Transfer in Solids** interface, the **Electric Currents** interface, and a **Multiphysics** node, including the default feature applicable to the multiphysics coupling (**Electromagnetic Heating**), are displayed under the **Added physics interfaces** list as in Figure 3-14. Figure 3-15 shows you what is included in the Model Builder when a predefined multiphysics interface is added. Compare to Figure 3-16 where individual physics interfaces are added, and these features are initially accessible only from the context menu. There can also be moving mesh nodes added as part of a multiphysics interface; they then appear under **Definitions** in the **Added physics interfaces** list.

You can add physics interfaces when you start creating the model with The Model Wizard or at any time with The Add Physics Window.

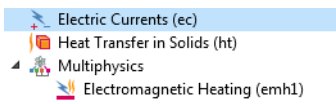

Figure 3-14: When Joule Heating is selected in the Model Wizard, the default physics interfaces and coupling feature are displayed under Added physics interfaces.

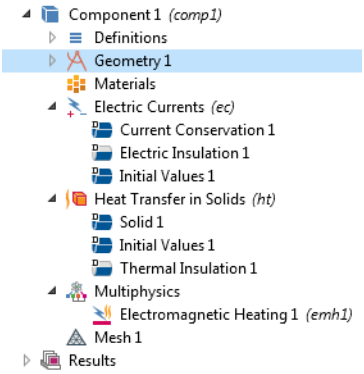

Figure 3-15: An example of what is added to the Model Builder when Joule Heating is selected in the Model Wizard. The Electromagnetic Heating feature is automatically included under the Multiphysics node.

ADDING PREDEFINED MULTIPHYSICS COUPLINGS TO PHYSICS INTERFACES

An empty **Multiphysics** node is added automatically when two (or more) physics interfaces are set up in a model and when there is the possibility to couple the physics interfaces. In other words, if you add physics interfaces one at a time, and the software identifies these physics interfaces as being of the multiphysics category, the **Multiphysics** node is automatically added to the Model Builder. The relevant predefined multiphysics coupling features are then available from the context menu (right-click the **Multiphysics** node) as well as from the **Physics** toolbar, in the **Multiphysics** menu. See Figure 3-16. You can also add predefined multiphysics couplings from the **Add Multiphysics** window (see The Add Multiphysics Window), which then adds all necessary multiphysics coupling nodes under the **Multiphysics** node. Using a workflow where you add physics interfaces and multiphysics couplings manually makes it possible to analyze and validate one physics at the time before solving the full multiphysics model.

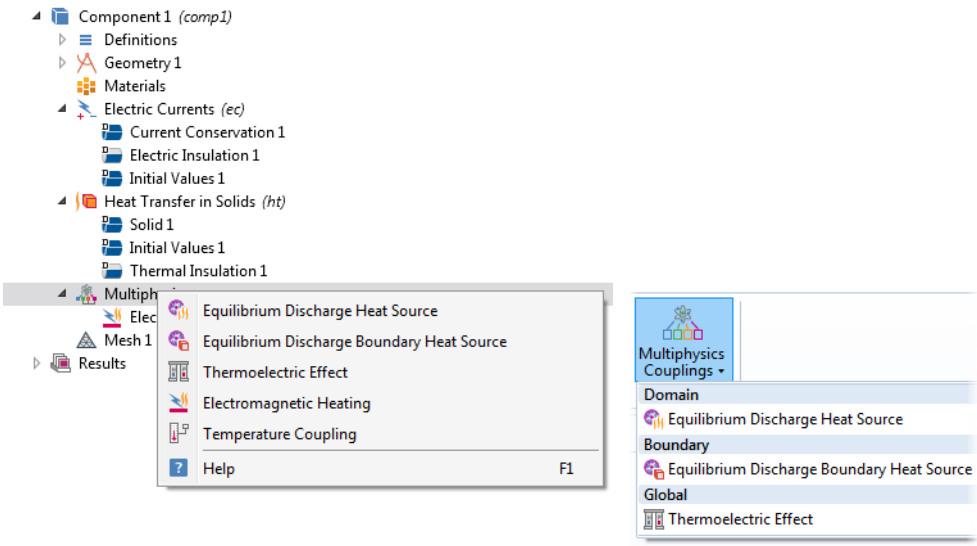

Figure 3-16: An example of when a Multiphysics node is automatically added to the model. The specific multiphysics features are made available from the context menu (left) or (partially shown here) Physics toolbar, Multiphysics menu (right) based on the physics interfaces in the model. The difference when the predefined Joule Heating interface is added is that these features are included under Multiphysics and there are some modified settings automatically applied. In either case, the available features depend on the COMSOL products that the license includes.

Advantages of Using the Predefined Multiphysics Interfaces

One advantage of using the predefined multiphysics interfaces is that specific or modified settings are included with the physics interfaces and the multiphysics coupling features. If physics interfaces are added one at a time, followed by the predefined multiphysics coupling features, these modified settings are not automatically included.

For example, if you add single Electric Currents and Heat Transfer in Solids interfaces to the Model Builder, the COMSOL Multiphysics software adds an empty **Multiphysics** node. The applicable multiphysics couplings are then available as subnodes that you can add. If you instead choose the predefined Joule Heating multiphysics coupling, for example, which then adds the **Electromagnetic Heating** node under the **Multiphysics** node, so that you do not need to remember which multiphysics coupling nodes to add for a specific type of multiphysics. See The Add Multiphysics Window.

In general, it is useful to use any type of multiphysics coupling because you can turn multiphysics on and off (that is, enable and disable features), giving you more flexibility to test and observe multiphysics effects.

Even if you do not start with a predefined coupling, another benefit of this approach is that you are no longer constrained by the use of specific physics interfaces, nor do these have to be added in any specific order. The order in which physics interfaces are added does not matter for the end result.

An example of this is if you start modeling by adding a Heat Transfer in Solids interface. As you continue to build the model, you add an Electric Currents interface. At this stage of the process, you may have defined several boundary conditions, chosen materials, or experimented with other settings. You may have also solved the model successfully at this point and now you want to continue building on this design. The COMSOL Multiphysics software recognizes this and adds a **Multiphysics** node, which you can right-click to access and add any of the available predefined multiphysics couplings.

For multiphysics interfaces that consist of participating physics interfaces, the default solver settings use a segregated solver approach with one segregated step for each physics interface and each of these steps calling an iterative solver. These solver settings are suitable for large models, but if possible, a fully-coupled solver approach using direct solvers can be more robust. You can switch to such solver settings by right-clicking the **Study** node and choosing **Show Default Solver**. Then the solver nodes that the predefined multiphysics interface specifies appear under the **Solver Configuration** node, and you can right-click the solver node to add a **Fully Coupled** solver node to replace the **Segregated** node, for example.

For some multiphysics interfaces, a side effect of adding physics interfaces one at a time is that two study types — Frequency-Stationary and Frequency-Transient — are not available for selection until *after* at least one coupling feature is added. In this case, it is better to first add an **Empty Study**, then add the coupling features to the **Multiphysics** node, and lastly, right-click the **Study** node to add the study steps as needed.

The Add Multiphysics Window

The **Model Wizard** and the **Add Physics** window contain predefined multiphysics interfaces, which typically add two or more physics interfaces and some predefined multiphysics coupling features that define the multiphysics couplings between those physics interfaces. When building a model, it can sometimes be useful to start with a single physics before adding other physics and the multiphysics couplings that connect them. To add any applicable predefined multiphysics coupling in a model, open the **Add Multiphysics** window ( ) by right-clicking a **Component** node or from the **Physics** ribbon toolbar. The predefined couped multiphysics couplings that the selected physics interfaces support then appear in the tree. Choose the wanted multiphysics couplings and add them to the component under **Multiphysics** by pressing Enter, clicking the **Add to Component** button ( ), or right-clicking a multiphysics coupling and choosing **Add to Component**. The required multiphysics coupling nodes are then added

to the model, and the participating physics interfaces are modified by setting the correct physics property values and adding any needed features for the selected multiphysics couplings.

You control which multiphysics couplings that appear using the settings under **Select the physics interfaces you want to couple**. You can clear and select all physics interfaces in the current component. By default, all physics interfaces are selected and appear with a check mark ( ) in the **Couple** column. The available multiphysics couplings depend on which COMSOL Multiphysics products your license includes. If no multiphysics coupling is available, **No Coupling Features Available for the Selected Physics Interfaces** appears. You must select at least two physics interfaces for any multiphysics couplings to appear. With more than two physics interfaces in the component, any combination of two or sometimes more physics interfaces typically results in a different set of available multiphysics couplings, whereas most combinations of three or more physics interfaces result in no available multiphysics couplings.

The existing **Studies** are listed under **Multiphysics couplings in study**. By default, the studies appear with a check mark ( ) in the **Solve** column, which indicates that the study solves for the equations that the multiphysics couplings add. Click in the column to clear the check mark and exclude the equations in the multiphysics coupling from that study. Some multiphysics couplings do not add any extra equations and are then not affected by this setting.

The Multiphysics Branch

The **Multiphysics** branch ( ) contains, or has available, any predefined multiphysics coupling features that are likely to be used as multiphysics couplings for a particular set of physics interfaces added to the Model Builder. See Figure 3-16. There are no settings required for the node itself.

Predefined multiphysics interfaces provide you with a quick entry point for common multiphysics applications. You can create the same multiphysics couplings using any of the other methods for multiphysics modeling, and you can continue to add, modify, disable, and remove physics features or interfaces in a model when you start using one of the predefined multiphysics interfaces. If you instead decide to add physics interfaces one by one, you can verify that each type of physics or equation gives the expected results before adding more complexity to the model by adding another physics interface, physics feature, or multiphysics coupling.

For links to more information about the add-on modules and the multiphysics interfaces available go to www.comsol.com/comsol-multiphysics.

Uncoupling a Multiphysics Coupling

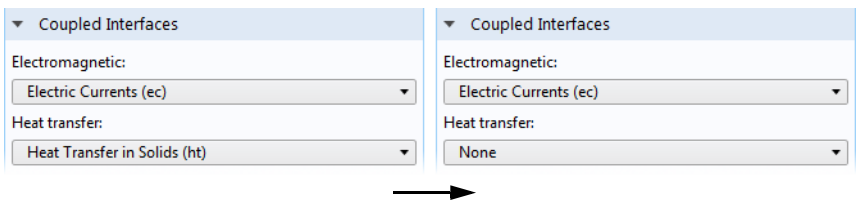

Figure 3-17: Uncoupling a predefined multiphysics coupling feature.

For each multiphysics coupling feature (for example, Electromagnetic Heating), there is a section that defines the physics interfaces involved in the multiphysics coupling. By default, the applicable physics interfaces are selected in the lists to establish the coupling.

You can also select **None** from the lists to uncouple the node from a physics interface. If the physics interface is removed from the **Model Builder** (for example, if a **Heat Transfer in Solids** interface is deleted), then the **Heat transfer**

list for the **Electromagnetic Heating** reverts to **None** (Figure 3-17) as there is no heat transfer interface to couple to. To avoid that the multiphysics coupling is turned off unintentionally, a warning **A coupled physics is set to 'None'** tooltip appears when you change a list under **Coupled Interfaces** to **None**.

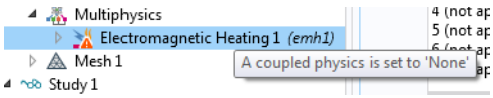

Figure 3-18: A warning tooltip appears when a multiphysics coupling is turned off.

If a physics interface is deleted and then added to the model again, and in order to re-establish the coupling, you need to choose the physics interface again from the lists. This is applicable to all multiphysics coupling nodes that would normally default to the once present physics interface.

Model Inputs and Multiphysics Couplings

Model inputs can appear in an equation or material model node's **Model Inputs** section. Model inputs are typically fields such as temperature and velocities that act as inputs for material models and model equations, but they can be any available physical property. They appear in the **Model Inputs** section if a material is defined so that a material property becomes a function of the temperature, for example. The COMSOL Multiphysics software connects the model input to an existing field (dependent variable) within the physics interface (but not to available fields in other physics interfaces). Default model inputs are always available. You can define scalar values for default model inputs under **Global Definitions** for use throughout the model (see Default Model Inputs).

For frequently used multiphysics couplings, predefined multiphysics coupling nodes are available under the **Multiphysics** node (see The Multiphysics Branch). The following part of this section is mostly useful for cases when such predefined couplings are not available.

With more than one physics interface in the model, coupling of the fields is easy: all applicable fields that can serve as inputs in another physics interface automatically appear in the other physics interface's **Settings** window's **Model Inputs** section. For example, with a Heat Transfer in Fluids (ht) interface and a Laminar Flow (spf) interface, you can select **Velocity field (spf)**, which the **Fluid Properties 1 {fp1}** node in the **Laminar Flow** branch defines, from the **Velocity field** list in the **Model Inputs** section of the **Settings** window for the **Fluid** node under **Heat Transfer in Fluids**. The velocity field from the Laminar Flow interface then becomes the velocity field for the convective heat transfer. You can also choose **Common model input** to use its value to define the velocity field, or choose **User defined** to enter a user-defined velocity field.

When you have selected a model input from one of the lists, click the **Go to Source** button ( ) next to the list to move directly to the node in the other physics interface that provides the model input. If more than one node contribute to the model input, choose which one to go to in the **Contributing Entities** dialog box. Then click **OK** to move to the selected node.

You can also, if you have selected **Common model input**, click the **Create Model Input** button ( ) to create a local **Model Input** node in the current component (see Model Input) for defining a model input for some or all of the geometry in the current component, overriding the default model input.

By default, the **Model Input** section in the **Fluid Properties** node under the **Laminar Flow** node is empty. But if you, for example, add a temperature-dependent material property such as the dynamic viscosity, a **Temperature** list appears in the **Model Input** section where you can explicitly choose the **Temperature (ht)** field or use a user-defined temperature or a **Common model input** like any other model input.

A list in the **Model Inputs** section becomes unavailable if the physics itself defines the field because it is then automatically connected to that field. For example, with a Heat Transfer in Fluids (ht) interface the **Temperature** list is unavailable in the **Fluid** node under **Heat Transfer in Fluids**. This automatic connection selects the

Temperature (ht) field. As long as the list is unavailable, you cannot change it. If you want to use another temperature field or an expression, you first make the list editable by clicking the **Make All Model Inputs Editable** button ( ). Using this option can be useful in order to, perhaps temporarily, break a multiphysics couping and use a user-defined value instead to, for example, investigate a simulation that does not converge.

	For this type of fluid-thermal coupling, the **Multiphysics** branch provides a predefined **Nonisothermal Flow** node, which provides an easy way to set up this coupling without having to explicitly specify the model input.

	See *Joule Heating of a Microactuator* for an example of combining the Electric Currents and Heat Transfer in Solids interfaces through a Joule Heating multiphysics interface (Application Library path **COMSOL_Multiphysics/Multiphysics/thermal_actuator_jh**).

Specifying Model Equation Settings

The fundamental mathematical model, representing the physics in a physics interface, is contained in physics nodes with selection on the same space dimension as the physics itself. The first node under a physics branch is of this type and sets up default equations where the physics interface is active. These equations are controlled by specifying:

- Material properties, which COMSOL Multiphysics uses as coefficients in the equations
- A coordinate system, which makes it possible to specify anisotropic material properties and vectors in a more convenient coordinate system than the global Cartesian coordinate system.
- A material model (a mathematical model for a constitutive relation, for example), which selects an equation suitable for a given type of material

Not all physics features allow anisotropic materials or more than one material model. Therefore, these settings cannot be present.

The default node uses the same material model, and thus the same equations, everywhere. Material properties can vary between different parts of the feature's selection, if the property is specified as taken **From material**. Add additional nodes to use different material models for different parts of the geometry, or to use different **User defined** material property values.

In equation-based modeling, provided by the Mathematics branch interfaces, the form of the equation is fixed for each particular node type. Each given equation form contains a number of free PDE coefficients, which you can be specify in the settings to define the specific equation that you want to solve.

Equation-Based Modeling

Specifying Equation Coefficients and Material Properties

To specify an equation coefficient or a material property, enter a value or an expression directly in the corresponding field. The expressions in those fields are interpreted, providing the possibility to enter expressions that include variables and coordinates in addition to constants and numerical values. Such expressions can contain:

- Numerical values.
- Units (see Using Units).
- Built-in Mathematical and Numerical Constants.
- Spatial coordinates, time, and the dependent variables in any physics feature in the model as well as the spatial derivatives and time derivatives. Using such variables makes it possible to create user-defined multiphysics couplings.
- Physical Constants — built-in universal physical constants.
- User-defined parameters, variables, coupling operators, and functions, including external functions and MATLAB® functions (requires the COMSOL LiveLink™ *for* MATLAB®). See Operators, Functions, and Constants.
- Built-in functions and operators such as `d` and `mean`.

You can use these types of variables, constants, functions, and operators in all settings for the physics interfaces; many types of variables are also available anywhere in the model.

In most cases where you can enter an expression, you can press Ctrl+Space to choose from a number of applicable variables, parameters, functions, operators, and constants that you can insert into the expression at the position of the cursor.

Modeling Anisotropic Materials

Anisotropic materials respond differently to an excitation depending on its direction. Because excitations are generally vectors and the corresponding response is a vector density, material properties are usually rank-2 tensor densities. For example, the following material properties are anisotropic tensor densities: diffusion coefficient, permittivity, thermal conductivity, and electrical conductivity.

These properties are, in principle, specified in matrix form and defined by their components in the coordinate system selected in the node settings. At most four components are used in 2D and at most nine components in 3D. When the material contains symmetries, you can specify only a few coefficients, which are expanded to a matrix using the following patterns:

- **Isotropic** (the default) — enter only one value c.

$$C = \begin{bmatrix} c & 0 & 0 \\ 0 & c & 0 \\ 0 & 0 & c \end{bmatrix}$$

- **Diagonal** — enter the diagonal components for an anisotropic material with the main axes aligned with the model's coordinate system.

$$C = \begin{bmatrix} c_{11} & 0 & 0 \\ 0 & c_{22} & 0 \\ 0 & 0 & c_{33} \end{bmatrix}$$

- **Symmetric** — enter a symmetric matrix using the diagonal components and the upper off-diagonal components.

$$C = \begin{bmatrix} c_{11} & c_{12} & c_{13} \\ c_{12} & c_{22} & c_{23} \\ c_{13} & c_{23} & c_{33} \end{bmatrix}$$

- **Full** — enter the full 2-by-2 (2D) or 3-by-3 (3D) matrix for an anisotropic material:

$$C = \begin{bmatrix} c_{11} & c_{12} & c_{13} \\ c_{21} & c_{22} & c_{23} \\ c_{31} & c_{32} & c_{33} \end{bmatrix}$$

Specifying Initial Values

An **Initial Values** node is added by default to each physics interface.

In some types of analyses initial values must be provided:

- As the initial condition for a time-dependent analysis.
- As an initial guess for the nonlinear stationary solver.
- As a linearization (equilibrium) point when solving a linearized stationary model or when performing an eigenvalue study.

To enter initial values, in the **Model Builder**, click the **Initial Values** node under a physics interface node. In the **Settings** window, enter the **Initial Values** for all dependent variables (fields) in the physics interface. The default initial values are usually zero.

For some physics interfaces you can also enter initial values for the first time derivative of the dependent variables. These are used when solving time-dependent problems containing second time derivatives (wave-type applications). Like other default settings, these initial values apply to all domains where no other values are specified.

To use different initial values in different domains, add another **Initial Values** node from the **Physics** ribbon toolbar (Windows users), **Physics** context menu (macOS or Linux users), or right-click to access the context menu (all users).

See Dependent Variables for more information about handling and plotting initial values.

Equation View

Equation View ( ) is a subnode available for all physics feature nodes. To display these subnodes, click the **Show More Options** button ( ) and select **Equation View** from the **Show More Options** dialog box.

The **Settings** window for **Equation View** contains detailed information about the implementation of each physics feature: variables, shape functions, weak-form equation expressions, and constraints.

To update the values in the **Settings** window for **Equation View** to reflect the latest changes in a physics feature, click the **Refresh Equations** button ( ) in the **Settings** window's toolbar.

Editing the predefined expressions for variables, equations, and constraints means that the equations are altered and that COMSOL Multiphysics solves the model using the new expressions.

You can edit the expressions or values of variables, weak-form expressions, and constraints in the corresponding tables under **Variables**, **Weak Expressions**, and **Constraints**, respectively. This makes it possible to introduce custom changes to the equations and variable definitions. If the expression that defines a variable, for example, does not fit inside of the text field, a tooltip displays the entire expression. Press Ctrl+Space or use the **Insert Expression** button ( ) below the tables to choose from a number of applicable variables, parameters, functions, operators, and constants that you can insert into the expression at the position of the cursor. In the table of variables under **Variables**, you can click any of the column headers to sort the table contents alphabetically based on the contents of that column (in ascending order; click again for descending order; click yet again to restore the original order).

For a changed definition of a variable or a change to a weak-form expression or constraint, a warning icon ( ) appears in the leftmost column, and a small padlock is added to the lower-right corner of the icon for the physics node where you have made modifications in its equation view. To restore only the change in the selected variable, weak-form expression, or constraint, click the **Reset Selected** button ( ) under the table in the **Variables**, **Weak Expression**, or **Constraints** section. To reset all changes in the equation view, click the **Reset All** button ( ) in the **Settings** window's toolbar. If no changes remain, the padlock disappears from the corresponding physics node. An orange color for the expression that defines the variable is a warning that the unit of the expression does not match the expected unit for the variable that it defines. To store all information in the tables under **Variables**, **Shape Functions**, **Weak Expressions**, or **Constraints** to a text file, click the corresponding **Save to File** button ( ).

For information about the Equation displays available, see Physics Nodes — Equation Section.

STUDY

From the **Show equation view assuming** list, choose **No study** or any of the available studies. The equation view of the parent feature is then recomputed with the assumption that the selected study step was solved. This operation also updates all children to the parent feature, so the lists in their equation views are also updated. When solving a study (or study step), the list also changes to represent the last computed study step. The default is **No study** and represents a default behavior, which computes the equations without any study type information. The equation form used is then undefined and depends on the physics that the parent feature belongs to. The equation view reverts to **No study** if you change some setting in the parent feature to indicate that the equation view no longer represent a specific study step.

VARIABLES

This section has a table with the variables that the physics node defines. The table includes these columns:

- **Name**: the name of the variable.
- **Expression**: the expression, using COMSOL syntax, that defines the variable.
- **Unit**: the unit for the variable (in the active unit system). If the unit of the expression does not match the unit of the variable, the expression is displayed in orange.
- **Description**: a description of the variable.
- **Selection**: the geometric entities (domains, boundaries, edges, or points) where the variable is defined (**Domain 1**, for example).
- **Details**: this column contains some details about the variable's behavior. See About the Details Column below.

If you click a single variable, its selection, as indicated in the **Selection** column, appears in the **Graphics** window.

SHAPE FUNCTIONS

This section has a table with the dependent variables that the physics node defines and their shape functions. This is primarily applicable to equation model nodes; for most physics nodes such as boundary conditions, the table is empty. The table has these columns:

- **Name**: the name of the variable.
- **Shape function**: the type of shape function (element) for the variable (for example, **Lagrange** for Lagrange elements, which are the most common elements).

Selecting an Element Type

- **Unit**: the unit for the variable (in the active unit system).
- **Description**: a description of the variable.
- **Shape frame**: the frame type (typically either a spatial or a material frame) for the shape function.
- **Selection**: the geometric entities (domains, boundaries, edges, or points) where the shape function is defined (**Domain 1**, for example).
- **Details**: This column contains some details about the shape function's behavior. See About the Details Column below.

WEAK EXPRESSIONS

This section has a table with the weak-formulation equation contributions that the physics node generates. The table consist of the following columns:

- **Weak expression**, the equation expressed in a weak formulation. It is possible to modify these expressions, but you then override the equation as specified by the physics interface, and a warning appears in the leftmost column of the table.
- **Integration order**, the order for the integration of the weak expression (see integration order in the *Glossary)*. Polynomials of at most the given integration order are integrated without systematic errors. For smooth expressions, a sufficient integration order is typically twice the order of the shape function. For example, the default integration order for second-order Lagrange elements is 4. You can modify the integration order if desired. A warning then appears in the leftmost column of the table to indicate that the predefined order has been changed.

	See the following blog post for information about modifying the integration order: https://www.comsol.com/blogs/introduction-to-numerical-integration-and-gauss-points/

- **Frame**, the frame type (typically either a spatial or a material frame) used when integrating the expression.
- **Selection**: the geometric entities (domains, boundaries, edges, or points) where the weak expression is defined (**Domain 1**, for example).

Each equation contribution appears on its own row under **Weak expression**, but the order is not significant.

	The PDE interfaces and the ODEs and DAEs interfaces do not display any weak expressions. They are either implemented using strong formulations, directly display the weak formulation, or define equations discretized in the time domain only.

CONSTRAINTS

This section has a table with the constraints that the physics node generates. This is typically the case for boundary conditions of constraint types, such as prescribed displacements, temperature, or velocities. Many other physics nodes do not generate any constraints, and the table is then empty. The table consists of the following columns:

- **Constraint**: the expression for the constraint.
- **Constraint force**: the expression that defines the associated constraint force, which is typically the test function of the constraint.
- **Shape function**: the type of shape function (element) for the constraint (for example, **Lagrange** for Lagrange elements).
- **Selection**: the geometric entities (domains, boundaries, edges, or points) where the constraint is defined (**Boundaries 1–5**, for example).

ABOUT THE DETAILS COLUMN

The **Details** column shows some information about the behavior of variables and shape functions. For variables:

- An empty cell indicates that overlapping contributions are overridden.
- **+ operation** indicates that overlapping contributions are added.
- For some variables, **Meta** indicates that the variable definitions are not fully updated until you solve the model. It is therefore not possible to edit the expressions for such variables.
- In rare cases, other operations (*** operation**, for example) can occur.

For shape functions:

- **Slit** means that the shape function creates a slit for the degree of freedom.

Physics Nodes — Equation Section

For each physics node there is an **Equation** section that is available by default on the **Settings** window. This section has options to display mathematical equations applicable to the node.

If you do not want to display the **Equation** section, click the **Show More Options** button ( ) and clear the **Equation Sections** check box in the **Show More Options** dialog box.

Equation View

The display options available from the lists depend on the study types and other physics-specific factors. See Figure 3-20 for an example comparing the equations that display for a **Stationary** or **Time Dependent** study for a **Heat Transfer in Solids** interface. Some **Settings** windows do not have any options and only display the relevant equation and other windows have additional sections that become available for the **Equation** display based on the study type selected.

Study and Study Step Types

Node Contributions Display a Dotted Line Under Part of the Equation

For all physics nodes (excluding the main physics interface node level), the equation that displays includes a dotted line underneath where the node's contribution is made to the equation. See Figure 3-19 for an example where a section of the heat transfer equation is underlined, indicating where the **Solid** node contributes to it.

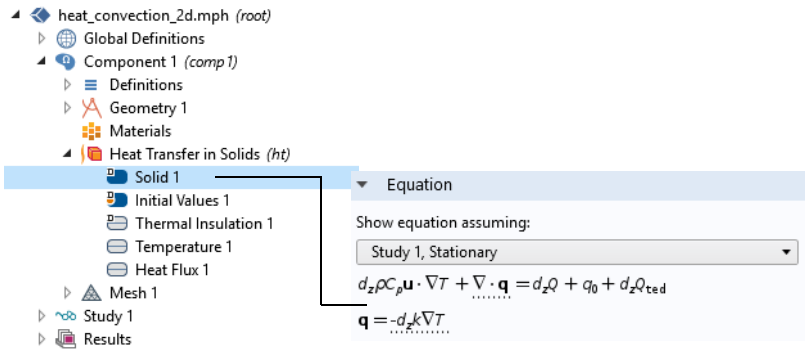

Figure 3-19: The Solid contribution to the equation for a 2D model.

Equation Form

When you add physics interfaces to a Component, the supported **Study types** are listed in the **Equation form** list. **Study controlled** is the default; select another option as needed. When the setting is **Study controlled**, the study controls the equation form — stationary or time dependent, for example — for the physics interface. In some cases, that equation form might not be compatible with the physics covered by the physics interface; the physics interface

then uses its default equation form (typically, a stationary equation form). You can then instead choose one of the supported study types.

Show Equation Assuming

The **Show equation assuming** option is available by default when **Study controlled** is selected (or left as the default) as the **Equation form**. Options availability is based on the studies added and defined for the model.

For the following options — frequency and mode analysis frequency — you also have the option to use another frequency than the one used by the solver. This can be necessary if you need two different frequencies for two physics interfaces.

Frequency

This option is available if **Frequency domain** is selected as the **Equation form**. The default uses the frequency **From solver**. If **User defined** is selected, enter another value or expression (SI unit: Hz).

Mode Analysis Frequency

This option is available if **Mode Analysis** or **Boundary Mode Analysis** is selected as the **Equation Form**. Enter a value or expression in the field (SI unit: Hz). Specify a frequency (it is not present as a solver variable).

Port Name

This option is available with the RF Module **Electromagnetic Waves** interface and if **Boundary Mode Analysis** is selected as the **Equation Form**. Enter a value in the field (unitless).

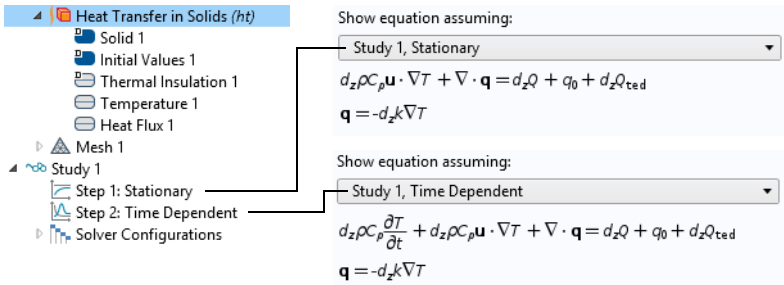

Figure 3-20: An example of the Equation section on a Heat Transfer interface. Selecting the study type updates the equation accordingly.

Boundary Conditions

In the interior of the selection where a physics feature is active, its behavior is governed by its model equations and material properties. *Boundary conditions* apply to the geometric entities separating this region from the unspecified outside and sometimes also to interior entities of the same dimension (interface conditions). Therefore, boundary conditions on a 3D solid object apply to the exterior surfaces of the solid and to interior surfaces embedded in the solid. On a shell geometry in 3D space, boundary conditions instead apply to the edges of the shell surface. In general, boundary conditions apply to geometric entities whose dimension is one less than the physics interface's dimension.

All physics interface branches that contain a default model equation node also contain a default boundary condition node. This boundary condition is active on all exterior boundaries of the physics' selection, except on the symmetry axis of axisymmetric 2D models. On interior boundaries, an implicit continuity condition applies, which makes the physics field (the temperature, for example) continuous across interior boundaries.

In physics interfaces defined on shells, for example, the domain equations are defined on 3D boundaries, and you define the interface conditions on edges as edge conditions rather than boundary conditions.

Boundary Condition Types

There are two fundamental ways to specify what is happening at a boundary, and two corresponding fundamental boundary condition types:

- *Flux conditions* specify how the surroundings affect and interact with the model at the boundary, often expressed as an applied force, flux, or current. This type of boundary condition is also called a *Neumann boundary condition*.
- *Constraints* specify the result of the interaction between the model and its surroundings, expressed as prescribed values of the dependent variables. This type of boundary condition is also called a *Dirichlet boundary condition*.

The two types are closely related because in a well-posed model, every flux condition results in some unique values of the dependent variables, and every constraint requires a unique flux to enforce the expected values. Which type of condition to use depends on what is known about the conditions at the boundary: if the flux is known, the model computes the dependent variables for you; if the values of the dependent variables are known, the model computes the flux.

FLUX CONDITIONS

Flux boundary conditions specify the component of a vector or tensor quantity in the direction normal to the boundary, per unit area of the boundary. Typical examples of flux conditions are the specification of:

- A Boundary Load in a solid model, which prescribes the stress acting on the boundary.
- Heat Flux in a heat transfer model, which prescribes the heat per unit area flowing into (or out of) the model across the boundary.
- A Normal Current Density in an AC/DC model, which prescribes the electrical current per unit area entering (or exiting) the model at the boundary.

There are also more advanced types of flux conditions, where the flux or force is calculated based on local values of dependent variables and other parameters. For example, a **Convective Heat Flux** boundary condition on a heated

body computes the heat flux based on a heat transfer coefficient and the temperature difference to the surroundings.

	Convective Heat Flux requires the CFD Module or Heat Transfer Module.

	In COMSOL Multiphysics, by convention, the force acting *on* the model or the flux *into* the model is specified. That is, specify how the surroundings affect the model and not how the model affects its surroundings. You can change the direction by reversing the sign before the numerical value of the force or flux.

CONSTRAINTS

Constraint boundary conditions specify the value of one or more dependent variables at the boundary, or a relationship between two or more dependent variables. Typical examples include specifying:

- A Prescribed Displacement of the boundary of a solid object.
- That the velocity is zero on a Wall boundary in a CFD model.
- The Temperature at the boundary of a heated solid.
- The Electric Potential on an electrode in an AC/DC model.

Examples specifying a relation between dependent variables include Roller conditions on solids and Wall conditions for slip flow.

Because constraint conditions generally specify the value of a dependent variable, they also provide a reference level for that variable, which a flux condition normally does not. In many types of physics, the model equations together with only flux boundary conditions uniquely describe the local behavior of the dependent variable, but leave the global level undefined. From a physical point of view, the absolute value of the dependent variables are often of less interest, but the existence of a single, unique, solution is essential for some solvers.

Therefore it is often necessary to apply at least one constraint condition in a model, to provide a global reference value for the dependent variables. For example, it is common to designate one of the electrodes in an AC/DC model as Ground, which constrains the electric potential there to zero and gives a reference with which to compare other parts of the model.

	In most physics features, the default boundary condition is of a *flux* type and does *not* fix a reference level for the dependent variable. Therefore, when solving certain study types (notably stationary studies), you must manually add at least one boundary condition of *constraint* type (or a point constraint) for the model to be well-defined.

SWITCHING OFF A CONSTRAINT

If you want to model a constraint that is active only for a certain period of time in a time-dependent simulation, for example, you can use the fact that a 0 constraint (or a Dirichlet boundary condition $u = u$) means that there is no constraint; instead, the boundary condition becomes a “no flux” or “insulation” condition. To implement such a time-limited constraint, you can use the `if` operator: for example, for a Dirichlet boundary condition,

`if(t<2,1,u)` means that for $t < 2$, u is equal to 1 but at $t = 2$ the boundary condition is turned off by setting $u = u$. For a Constraint node, the corresponding `if` statement is `if(t<2,1-u,0)`.

- Constraint Reaction Terms
- Weak Constraints
- Constraint Settings

Physics Interface Boundary Types

There are different types of boundaries for the physics interfaces, which all support different types of boundary conditions:

- Exterior boundaries, where most boundary conditions are applicable — see below.
- Interior boundaries, where special interface conditions can be applicable — see below.
- Axial symmetry boundaries, which are artificial boundaries representing the symmetry axis in axisymmetric models.

If a selection for a boundary condition node, for example, contains boundaries of a type that is not applicable or supported, the **Selection** list has **(not applicable)** next to those boundary numbers.

INTERIOR AND EXTERIOR BOUNDARIES

When specifying boundary and interface conditions, COMSOL Multiphysics differentiates between exterior and interior boundaries:

- An *exterior boundary* is an outer boundary of the modeling domain.
- A *interior boundary* is a dividing interface between two domains in the geometry.

If an equation or physics interface is deactivated in one domain, the interior boundary between the active and inactive domain becomes an exterior boundary for its variables because it then borders on the outside of the active domain for those fields. The boundaries of the inactive domain are then void.

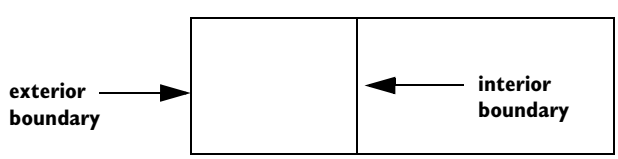

Figure 3-21: Examples of exterior and interior boundaries.

Continuity on Interior Boundaries

Unless a boundary condition is specified on interior boundaries (such as a contact resistance condition), the COMSOL Multiphysics software ensures continuity in the field variables across interior boundaries. For assembly geometries with identity pairs, select a **Continuity** node in the **Pairs** menu in the boundary part of the context menu for most physics interfaces. The **Continuity** condition is only suitable for pairs where the boundaries match.

BOUNDARY SELECTION

The selection list in this section shows the boundaries for the selected pairs.

PAIR SELECTION

Select the pairs where you want to impose continuity across the pair boundaries by clicking the **Add** button (+) and choose the pairs to add from the list in the **Add** dialog box that opens; then click **OK**.

Identity and Contact Pairs

Physics Interface Axial Symmetry Node

In axisymmetric components, boundaries on the symmetry axis are boundaries where only a condition for the axial symmetry exists. The COMSOL Multiphysics software adds a default **Axial Symmetry** node that is active on all boundaries on the symmetry axis. The condition on the symmetry axis is typically a zero Neumann or no-flux condition.

BOUNDARY SELECTION

The selection list for boundaries is not available because this is a default boundary condition. In the list, boundaries that are not on the symmetry axis have **(not applicable)** added after the boundary number.

Physics Feature Nodes by Space Dimension

Constraint Reaction Terms

Enforcing a constraint condition is more or less a matter of finding a corresponding flux condition that leads to the desired values of the dependent variables. The hidden flux conditions introduced this way appear as *reaction terms* in the system of equations modeling the physics. These reaction terms normally have a physical meaning and correspond to a flux condition, for example:

- The reaction term enforcing a Prescribed Displacement on a solid model is a *reaction force*, similar to a Boundary Load boundary condition.
- The reaction term enforcing a **Pressure** in an acoustics model is a Normal Acceleration.
- The reaction term enforcing a **Temperature** in a heat transfer model is a Heat Flux.

Weak Constraints

The reaction terms in the model equations can be scaled in different ways, affecting mainly the numerics and solvers. In a model with more than one dependent variable, it is also possible to distribute the reaction fluxes, or forces, over the variables in different ways — while still enforcing the original constraint.

SYMMETRIC REACTION TERMS

Most boundary conditions of constraint type, by default, introduce reaction terms in such a way that an otherwise symmetric system of equations remains symmetric. This makes constraints *bidirectional* in the sense that all dependent variables that appear in a constraint expression are also affected by the reaction terms.

To illustrate this, suppose a **Prescribed Displacement** boundary condition is applied on a solid model, specifying that the x-displacement of the boundary, u, is proportional to the y-displacement, v, with a constant of proportionality, k, which is a function of the boundary temperature T:

$$u = k(T)v \tag{3-1}$$

If fully symmetric reaction terms are used to enforce this constraint, reaction forces are applied on both displacement components u and v, as well as a reaction heat flux in the heat transfer equation. Applying symmetric reaction terms this way, on completely different equations, is usually not meaningful.

In particular, the solid displacement equation and the heat transfer equation have different units. Because you can choose length and temperature unit independently, the relative scale of the equations is undefined and the symmetry of the coupled system irrelevant. Further you would not, from a physical point of view, expect a constraint on the displacement of a solid boundary to directly affect the temperature field in a model.

Symmetric and Nonsymmetric Constraints

RESTRICTED AND NONSYMMETRIC REACTION TERMS

As an alternative to the default (symmetric) application of reaction terms, you can choose to have these affect only the equations and variables in the physics interface where the constraint boundary condition is added. For the example in Equation 3-1, the reaction terms can be restricted to act on the displacement variables and equations in the Solid Mechanics interface, leaving the temperature unaffected. Many different restrictions of this type are possible, in principle, and the COMSOL Multiphysics software generally provides two alternatives:

- The most consistent and general way to avoid spurious reaction terms affecting other physics is to start from the globally symmetric formulation and remove the terms entering equations belonging to other physics interfaces. This limits the reaction terms to affecting the current physics as if there were no other physics in the model, so the reaction terms preserve the symmetry. For Equation 3-1, this means that reaction terms are distributed over both u and v equations, in proportions $1{:}k(T)$.
- The other alternative is to apply the reaction terms only on certain individual variables. Another way to look at Equation 3-1 is to read it as prescribing a value for the x-displacement u, rather than prescribing a given relation between u and v. Accepting that view, it is reasonable to insert reaction terms only acting on u. Such reaction terms, in general, do not preserve symmetry even for a single physics interface.

Constraint Settings

Most constraint nodes include a **Constraint Settings** section, which is only available when **Advanced Physics Options** is selected in the **Show More Options** dialog box. This section provides settings controlling how reaction terms are applied, when applicable, and whether to use pointwise standard constraints or weak constraints. Choose to **Apply reaction terms on**:

- **All physics (symmetric)** to apply reaction terms symmetrically on all dependent variables taking part in the constraint.
- **Current physics (internally symmetric)** to apply reaction terms symmetrically only on the dependent variables in the physics where the constraint is added. This leaves other physics unaffected by the constraint.
- **Individual dependent variables** to apply reaction terms only on selected variables. For most physics, this makes the constraint *unidirectional* and often nonsymmetric.

Select the **Use weak constraints** check box to replace the pointwise standard constraints with weak constraints (see Weak Constraints below). Note that this option introduces additional equations and dependent variables. If you

use pointwise constraints (the default; the **Use weak constraints** check box is cleared), then select a **Constraint method** for the pointwise constraints: **Elemental** or **Nodal**:

- Choose **Elemental** (the default) to make the software assemble the constraint on each node in each element; that is, there are usually several constraints at the same global coordinates because elements in the computational mesh overlap at nodes.
- Choose **Nodal** to make the software assemble a single constraint for each global node point. The nodal constraint method provides an averaging of the constraints from adjacent elements, which can be beneficial when the constraint has discontinuities between mesh elements (for example, due to discontinuities of the boundary normal). Another case where nodal constraints can be useful is in boundary conditions involving a coupling operator (such as continuity or periodic conditions). With elemental constraints, locking effects can sometimes occur because the coupling operator might map to slightly different points in the source boundary when it is applied to the same node point in different mesh elements.

Not all constraints provide all the above options. Some reaction term methods can be missing and weak constraints are not allowed. Some constraint nodes can also implement additional options.

Excluded Surfaces, Excluded Edges, and Excluded Points

Some constraint nodes, especially for structural modeling, include (depending on the space dimension and the geometry level of the constraint node) **Excluded Surfaces**, **Excluded Edges**, and **Excluded Points** sections, which are only available when **Advanced Physics Options** is selected in the **Show More Options** dialog box. You can use the settings in these sections to exclude some lower-level entities form being constrained for a certain boundary condition or constraint on the domain level. Conflicting Dirichlet conditions, such as constraints, can cause problems for several reasons:

- If constitutive properties differ a lot between two adjacent domains, the flux will be sensitive to whether a Dirichlet condition on a boundary includes the common edge or not.
- When you want to mix weak and pointwise constraints on the same degree of freedom, they cannot coexist on nodes shared at, for example, a corner.

The **Excluded Surfaces**, **Excluded Edges**, and **Excluded Points** sections contain settings for selecting surfaces (that is, boundaries in 3D), edges (that is, boundaries in 2D and edges in 3D), and points, respectively. See About Selecting Geometric Entities for information about selecting geometric entities such as edges.

Weak Constraints

The standard method to enforce constraints in the COMSOL Multiphysics software applies the constraints pointwise at node points in the mesh. At each node point, only local values of the dependent variables are affected by the constraint, making the constraints independent of each other. The solvers can therefore eliminate both the constrained degrees of freedom and the constraint force terms, effectively reducing the system of equations and decreasing the number of degrees of freedom being solved for.

Weak constraints enforce the constraint in a local average sense, using shape functions as weights. Reaction terms are explicitly included in the system of equations, which is extended with *Lagrange multiplier* variables. These Lagrange multipliers in general have a physical meaning and an interpretation as a constraint force or flux. Whereas a standard constraint decreases the number of degrees of freedom by the number of unique constraints, weak constraints increase the degrees of freedom by the same number.

A weak constraint is respected only on average over each Lagrange multiplier shape function, rather than pointwise at mesh nodes. When it is possible to satisfy the constraint everywhere on each mesh element, standard and weak

constraints in general lead to the same solution. Conversely, when constraints are contradictory or impossible to satisfy everywhere, standard and weak constraints can distribute the error differently, and therefore lead to slightly different solutions.

Weak constraints can be of use in the following situations:

- Standard constraints must never contain time derivatives of the dependent variables. Weak constraints do not have this limitation because they allow the same variables as any other term in the combined system of equations. Note that reaction terms cannot be applied symmetrically to time derivatives but must be selectively applied to individual variables.
- When the reaction force or flux is needed during a solution, because it enters into a coefficient somewhere, the Lagrange multiplier from a weak constraint can provide an accurate value (see Computing Accurate Fluxes). The corresponding variables computed from derivatives of the dependent variables are not as accurate and can, if used, introduce considerable errors in the solution.
- When constraints are strongly nonlinear, weak constraints can allow faster and more robust convergence. For nonlinear constraints, the true linearized subproblem solved in each solution step depends on the value of the Lagrange multiplier variables from the previous step. When using standard constraints, this information is discarded between solution steps. Using weak constraints, the Lagrange multiplier values are instead retained between steps because they are part of the solution vector.

Compared to standard, eliminated, constraints, weak constraints can also have the following drawbacks:

- Discontinuous constraints result in (theoretically) infinite Lagrange multipliers. In practice, large oscillations result.
- Pointwise and weak constraints on the same set of variables on adjacent boundaries (that is, boundaries that share common node points in the mesh) do not work. This means that if all boundaries must be constrained on a solid and you want to use a weak constraint on one boundary segment (one face), the weak constraint must be used on the entire boundary of the solid (if the boundary is connected).
- Lagrange multipliers are in some cases difficult to interpret. For example, Lagrange multipliers from Dirichlet conditions in axial symmetry are not equal to the reaction flux per area but rather per length and full revolution. For separate Weak Constraints nodes in axial symmetry, the default quadrature settings include a multiplication by $2\pi r$, making the Lagrange multiplier represent flux per area.
- Because extra unknowns are introduced for the Lagrange multipliers, the size of the problem increases compared to the standard constraint elimination method.
- The Lagrange multiplier variables added by the weak constraints have a different unit than the main system variables and can therefore be of a different order of magnitude. This can lead to scaling problems. Usually the automatic variable scaling in the solvers is sufficient, but there are cases when manual scaling is needed.
- Weak constraints introduce zeros on the main diagonal of the Jacobian matrix of the discretized system, which therefore cannot be positive definite. This makes certain linear solvers and preconditioners unavailable for solving problems with weak constraints. In particular, the conjugate gradients iterative solver does not work, and neither does the SOR class of preconditioners and smoothers. Instead, try another iterative solver and use the Vanka algorithm with the Lagrange multipliers as the Vanka variables, or use the incomplete LU factorization algorithm as preconditioner.

Constraint Reaction Terms

Periodic Boundary Conditions

Use *periodic boundary conditions* to make the solution equal on two different (but usually equally shaped) boundaries.

To add a periodic boundary condition, in the **Model Builder**, right-click a physics interface node and select **Periodic Condition**. The periodic boundary condition typically implements standard periodicity so that $u(x_0) = u(x_1)$ (that is, the value of the solution is the same on the periodic boundaries). In most cases you can also choose antiperiodicity so that the solutions have opposing signs: $u(x_0) = -u(x_1)$. Other options such as Floquet periodicity or cyclic symmetry may be available. The periodicity is implemented in such a way that fluxes become periodic in the same way as the solution itself.

For fluid flow physics interfaces, the **Periodic Flow Condition** provides a similar periodic boundary condition but without a selection of periodicity. Instead, it allows specifying a pressure difference between the source and destination boundaries.

Typically, the periodic boundary conditions determine the source and destination boundaries automatically, but you can also add **Destination Selection** subnode to manually split the periodic boundary condition's selection into source and destination selections.

The KdV Equation and Solitons: Application Library path **COMSOL_Multiphysics/Equation_Based/kdv_equation**.

ORIENTATION OF SOURCE AND DESTINATION

The periodic condition applies a constraint on the destination selection, constraining the solution at each destination point $\mathbf{r}_{\text{dst}}$ to be equal to the solution at a corresponding source point $\mathbf{r}_{\text{src}}$. When the periodic condition is applied on surfaces in 3D or edges in 2D, the source point is computed using a rotation of the position relative to the destination and source centers of mass, $\mathbf{r}_{0,\text{dst}}$ and $\mathbf{r}_{0,\text{src}}$:

$$\mathbf{r}_{\text{src}} = \mathbf{r}_{0,\text{src}} + R(\mathbf{r}_{\text{dst}} - \mathbf{r}_{0,\text{src}}) \tag{3-2}$$

where R is a rotation matrix encoding the relative orientation of the source and destination boundaries. It is normally determined automatically from the cross product of the source and destination boundary normal directions. That is, the rotation is performed about an axis perpendicular to the plane spanned by the normal directions, which are evaluated at arbitrary points on each boundary.

When the periodic condition is applied on a shell or beam in 3D, the selection is edges or vertices without a well-defined normal. An automatic mapping from destination point to source point is defined based on the

geometry parametrization. Each destination point is mapped on a source point with the same arc length parameter value (see the image below).

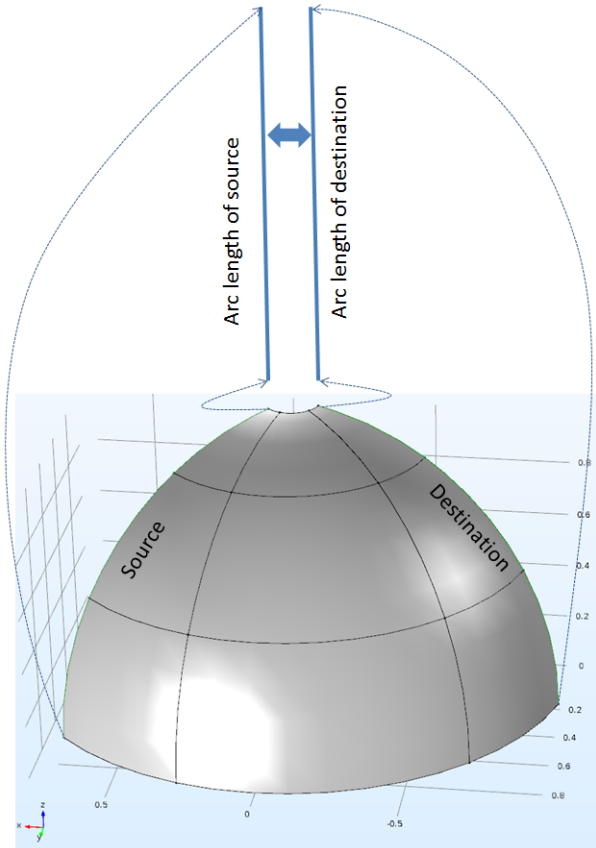

The automatically computed relative orientation is in most cases the one expected. In particular, it is correct if the source and destination have unique normal vectors which are parallel but pointing in opposite directions, unless the geometry is twisted about that direction. But there are a number of situations when the automatic orientation is not necessarily the one expected:

- The geometry is twisted in such a way that the destination selection cannot be represented as a rotation of the source about a single axis.
- The source and destination boundaries are not planar, such that their normals are not unique.
- The source and destination selections are edges or points in 3D, and the arc length parameter values are growing in opposite directions.

For most periodic boundary conditions in the physics interfaces, it is then possible to specify the relative orientation of the source and destination selections using coordinate systems.

The orientation settings appear in an **Orientation of Source** section in the main periodic condition node and in an **Orientation of Destination** section in a **Destination Selection** subnode. To display these settings, first select **Advanced Physics Options** in the **Show More Options** dialog box. The **Orientation of Destination** section is only visible if the source orientation has been chosen manually.

In both sections, there is a **Transform to intermediate map** list. In the **Orientation of Source** section in the main periodic condition node, its default value is **Automatic**. Other possible values represent coordinate systems, including all coordinate system nodes defined in the component as well as the canonical **Global coordinate system**. The latter is the default choice for the **Orientation of Destination** section in **Destination Selection** subnodes.

The chosen source and destination coordinate systems define transformation matrices, T_{src} and T_{dst}, whose row index refers to local coordinate system components, while the column index refers to global coordinates on the source and destination selections, respectively. A rotation matrix as defined by Equation 3-2 is computed by assuming that the source and destination coordinate system coordinates refer to the same basis:

$$R = T_{\mathrm{src}}^{T} T_{\mathrm{dst}}^{-T}$$

PERIODIC BOUNDARY CONDITION MODEL EXAMPLES

In addition to the KdV Equation model example, other modules have examples using this feature.

	AC/DC Module *Magnetotellurics*: Application Library path: **ACDC_Module/Other_Industrial_Applications/magnetotellurics** *Acoustics Module* *Porous Absorber*: Application Library path: **Acoustics_Module/Building_and_Room_Acoustics/porous_absorber**
	RF Module or Wave Optics Module *Fresnel Equations*: Application Library path: **RF_Module/Verification_Examples/fresnel_equations** *Fresnel Equations*: Application Library path: **Wave_Optics_Module/Verification_Examples/fresnel_equations** *Structural Mechanics Module* *Vibrations of an Impeller*: Application Library path: **Structural_Mechanics_Module/Dynamics_and_Vibration/impeller**

Computing Accurate Fluxes

Flux Computation Methods

The COMSOL Multiphysics software provides three ways to compute accurate fluxes and reaction forces:

- The first approach involves the reaction force operator (`reacf`) that makes it possible to compute integrals of reaction forces or fluxes during results analysis. See reacf for details.
- The second, more general approach for calculating reaction forces and fluxes is to use weak constraints. Use this approach when you need reaction forces or fluxes in other contexts than calculating integrals of reaction forces or fluxes.

Weak Constraints

- Some physics interfaces provide a third way of computing accurate fluxes. Under the **Discretization** section (if **Advanced Physics Options** is selected in the **Show More Options** dialog box), select the **Compute boundary fluxes** check box. The solver then computes variables storing an accurate boundary flux from each boundary into the adjacent domain (in addition to the standard extrapolated value). On interior boundaries, there are two flux variables corresponding to the flux into the domains on either side of the boundary. Unlike the other methods, these variables are available also on unconstrained boundaries. This method is active by default in Coefficient Form PDE, General Form PDE, heat transfer, and mass transport interfaces. There is also an **Apply smoothing to boundary fluxes** check box that is selected by default. The smoothing can provide a more well-behaved flux value close to singularities. See also Boundary Flux Operators: uflux and dflux.

When using weak constraints in interfaces, the Lagrange multipliers are additional dependent variables in those physics interfaces. When using the reaction force operator, the reaction force operator of a certain dependent variable corresponds to the Lagrange multiplier of that dependent variable. The Lagrange multipliers correspond to the following quantities in the physics interfaces:

TABLE 3-6: INTERPRETATION OF LAGRANGE MULTIPLIERS

PHYSICS INTERFACE	QUANTITY
Electrostatics	Surface charge density
Magnetic Fields	Surface current
Electric Currents	Current density
Heat Transfer	Heat flux
Transport of Diluted Species	Flux
Solid Mechanics	Force per area
Pressure Acoustics	Normal displacement (acceleration for eigenfrequency studies)
Laminar Flow	Total force per area

The sign of the Lagrange multiplier is the same as the one used when applying the corresponding quantity explicitly in a flux condition. As a general rule, the sign corresponds to an action by the surroundings on the model, rather than the opposite.

The program computes only the part of the boundary flux captured by the Lagrange multiplier. You might have additional flux coming from boundary sources or nonidentity constraint matrices. This should not happen in the physics interfaces, though.

	Lagrange multipliers in axial symmetry are not equal to the reaction flux per area but rather per length and full revolution.

	Flux Calculation Example — Heat Transfer Model

The reaction forces are computed from the value of the residual vector at every node point where a constraint is applied. Therefore, the reaction forces should be thought of as discrete values at each node point rather than continuous fields.

The boundary flux variables are computed in a similar way to the reaction forces but with two important differences:

- First, on each boundary, the contributions to the residual vector from the boundary and from the adjacent domains are computed separately. This makes it possible to compute the flux into each adjacent domain even when there is no constraint on the boundary so that the full residual vector is zero.
- Second, the nodal fluxes computed from the residual vector are further processed and represented as a continuous field on the boundary. The integral of this flux field over a boundary is equal to the sum of the nodal fluxes.

Flux Calculation Example — Heat Transfer Model

Consider a heat transfer model where a heat flux of 1 W/m^2 flows in through one boundary of a square 2D region. All other boundaries are kept at a fixed temperature of 293.15 K. The material is copper. This example verifies that the flux is conserved exactly using a Lagrange multiplier for computing the total flux over the boundaries with a fixed temperature.

MODEL WIZARD

1 Open the Model Wizard (see Open a New Window to Begin Modeling).

2 On the **Select Space Dimension** page, click the **2D** button .

3 In the list of physics interfaces, under **Heat Transfer** click **Heat Transfer in Solids** . Click **Add**.

4 Click the **Study** button . On the **Select Study** page under **Preset Studies**, click **Stationary** .

5 Click **Done**.

GEOMETRY

In the **Geometry** toolbar, from the **Rectangle** menu, click to add a **Square** (1-by-1 m).

MATERIALS

1 In the **Material** toolbar, click **Browse Materials** .

2 Under **Built-in**, click **Copper** then click **Add to Component**.

3 Click **Done** .

HEAT TRANSFER

The **Heat Transfer in Solids** node defines the material properties to be those from the material (copper) and does not need to be changed, but the default boundary condition is thermal insulation. Instead, add a heat flux to the bottom boundary and a fixed temperature on the other three boundaries.

1 In the **Model Builder**, click the **Heat Transfer in Solids** node .

2 In the **Physics** toolbar, from the **Boundaries** menu click **Heat Flux** .

3 In the **Graphics** window, click boundary 2 (the bottom boundary) to add it to the selection.

4 In the **Settings** window for **Heat Flux**, enter 1 (1 W/m^2) in the **General inward heat flux** field for q_0.

5 Right-click **Heat Transfer in Solids** node and select **Temperature** .

6 In the **Graphics** window, select the other three boundaries (1, 3, and 4) and add them to the selection for the temperature condition.

7 This step is only needed to show how to use a Lagrange multiplier for an accurate flux. Built-in variables for accurate fluxes are available directly also without this step.

To display the weak constraint option to add the Lagrange multipliers, click the **Show More Options** button ( ) and select **Advanced Physics Options** in the **Show More Options** dialog box. In the **Model Builder** click the **Temperature** node. In the **Settings** window, keep the default value for the temperature, 293.15 K. Click to expand the **Constraint Settings** section and select the **Use weak constraints** check box. This adds a Lagrange multiplier for the heat flux as an extra variable to compute.

COMPUTING THE SOLUTION

In the **Home** toolbar, click **Compute** . The resulting plot shows the temperature distribution in the domain.

RESULTS — FLUX EXPRESSION AND LAGRANGE MULTIPLIER

1 Under **Results>Derived Values>Integration**, click **Line Integration** .

2 Select the three boundaries with a fixed temperature (boundaries 1, 3, and 4) to add them to the selection in the **Settings** window for **Line Integration**.

3 Click the **Replace Expression** button ( ) and select **Heat Transfer in Solids>Boundary fluxes>Normal total heat flux** (the variable `ht.ntflux`).

4 Click the **Evaluate** button ( ).

The total normal heat flux across these boundaries appears in the **Table** under **Normal total heat flux (W/m)** and is exactly equal to the influx of 1 W/m (the normal flux is by convention positive in the direction of the normal).

If you were to clear the **Compute boundary fluxes** check box in the **Discretization** section (click the **Show More Options** button and select **Advanced Physics Options** in the **Show More Options** dialog box first) for the **Heat Transfer in Solids** node, and then re-solve the model, the same flux variable is not as accurate and has a value of about 0.986 W/m. That value approaches 1 if you refine the mesh.

5 Click the **Replace Expression** button ( ) and select **Heat Transfer>Lagrange multiplier for temperature** (the variable `T_lm`).

6 Click the **Evaluate** button ( ).

The total heat flux across these boundaries appears in the **Table** under **Lagrange multiplier for temperature** and is –1, exactly equal to the influx (but with opposite sign) without the need for a computationally expensive extremely fine mesh. This method is useful for physics where built-in accurate flux variables are not available.

Using Load Cases

About Load Cases

For linear stationary problems it can be of interest to see the solution for several different loads $\boldsymbol{F}$ (right-hand side of the basic PDE) on the same structure (a model where the geometry and materials are defined and do not change). Typically this is used for studies using linear combinations of different loads — *load cases*. It is then possible to solve for these load cases in a computationally efficient way because there is no need to reassemble the stiffness matrix. Varying constraints can also be part of a general load case definition, and the COMSOL Multiphysics software supports load cases that are combination of loads, with optional weights, and constraints.

- The Relationship Between Study Steps and Solver Configurations
- Physics Symbols
- Stationary study step

Defining Load Groups and Constraint Groups

For boundary conditions that represent loads and constraints, as well as other loads and constraints such as body loads, you can define *load groups* and *constraint groups*, which contain the loads and constraints, respectively, that you want to use as parts of load cases. All loads and constraints for structural mechanics as well as boundary conditions such as heat flux (a load) and temperature (a constraint) in heat transfer support load groups and constraint groups. You can create load groups and constraint groups in two ways: from the **Global Definitions** node's context menu or a physics node's context menu. Both methods add the node under **Global Definitions**.

ADD A LOAD OR CONSTRAINT GROUP FROM THE GLOBAL DEFINITIONS CONTEXT MENU

Add a **Load Group** ( ) or **Constraint Group** ( ) under **Global Definitions** to create groups to which you can later assign loads and constraints. If you group the nodes, the load and constraint groups display under the **Load and Constraint Groups** node ( ). See Figure 3-22.

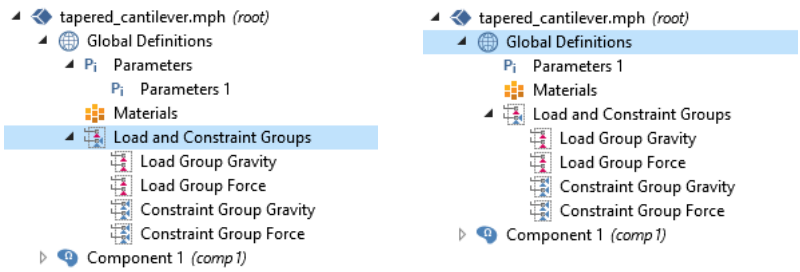

Figure 3-22: An example of the node grouping when Group by Type is selected (left) and when Ungroup is selected (right).

ADD A LOAD OR CONSTRAINT GROUP FROM A PHYSICS NODE CONTEXT MENU

Right-click a physics node for any load or constraint (for example, a Fixed Constraint, Heat Source, or Boundary Load node) and choose **Load Group>New Load Group** or **Constraint Group>New Constraint Group**, respectively. The software creates a Load Group or Constraint Group under Global Definitions and at the same time assigns that physics node (a load or a constraint) to that group.

ASSIGN A LOAD OR CONSTRAINT TO A GROUP

To assign a load or a constraint to a load group or constraint group, right-click the physics node for a load or constraint and from the **Load Group** or **Constraint Group** submenu choose one of the following (see Figure 3-23):

- **Active in All Load Groups** (or **Active in All Constraint Groups**). This is the default setting, which you can use for some boundary conditions or other parts of the physics design that take part in all load cases.
- One of the defined load groups or constraint groups such as **Load Group 1**, **Load Group 2**, and so on.
- **New Load Group** (or **New Constraint Group**) to create a new group as described earlier in this section.

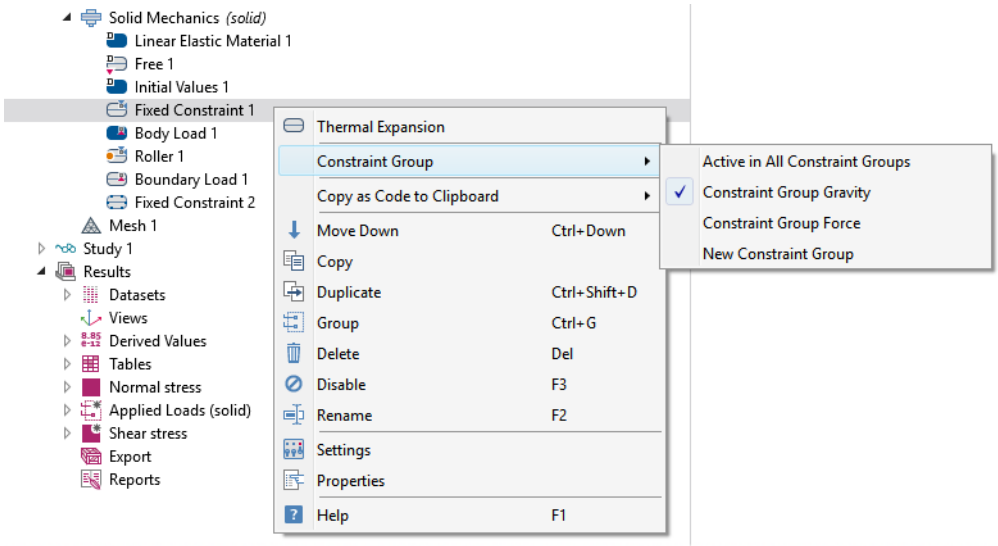

Figure 3-23: An example of the context menu options when a load or constraint physics node is right-clicked, in this case, the Fixed Constraint node.

Define as many groups as you need for the load cases that you want to study. Each load or constraint can only belong to one group. The next step is then to define the actual load cases as combinations of these groups (see Defining and Evaluating Load Cases).

When the Load Group or Constraint Group is applied to a node under a physics interface, the node indicates this visually. For example, the **Fixed Constraint** and **Roller** nodes have the blue **Constraint Group** symbol in the upper-right

corner and the **Body Load** and **Boundary Load** nodes have the red **Load Group** symbol in the upper-right corner as in Figure 3-24.

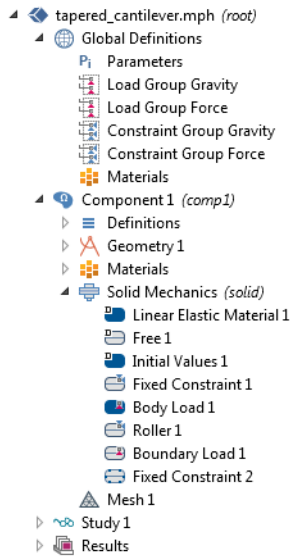

Figure 3-24: An example of the Load and Constraint Groups defined under Global Definitions with loads and constraints applied to nodes under Solid Mechanics.

	• *Tapered Cantilever with Two Load Cases*: Application Library path **COMSOL_Multiphysics/Structural_Mechanics/tapered_cantilever** • If you have the Structural Mechanics Module, also see *Pratt Truss Bridge*: Application Library path **Structural_Mechanics_Module/Beams_and_Shells/pratt_truss_bridge**.

Load Group

Add a **Load Group** ( ) under the **Global Definitions** node to create a load group to which you can assign one or more loads. You can then activate the load group in one or more *load cases* for efficiently solving a structural mechanics or heat transfer model to analyze the effects of various loads or sources.

SETTINGS

The **Label** is the default coordinate system name. The default **Parameter name** (for the first coordinate system in the model) is `lg`. This can be modified if you want to use a more descriptive parameter name (for example, `lgGravity`). You can also create load groups from physics nodes for structural mechanics that represent loads and support load cases: Right-click the physics node and choose **Load Group>New Load Group**.

Constraint Group

Add a **Constraint Group** ( ) under the **Global Definitions** node to create a constraint group to which you can assign one or more constraints. You can then activate the constraint group in one or more *load cases* for efficiently solving a model to analyze the effects of various constraints.

SETTINGS

The **Label** is the default coordinate system name. The default **Parameter name** (for the first coordinate system in the model) is `cg`. This can be modified if you want to use a more descriptive parameter name (for example, `cgForce`).

You can also create constraint groups from physics nodes for structural mechanics that represent constraints and support load cases: Right-click the physics node and choose **Constraint Group>New Constraint Group**.

	If you select **Group by Type** from the context menu, either right-click the **Global Definitions** node or the **Loads and Constraints Groups** node ( ) to add a **Load Group** or **Constraint Group**.

Defining and Evaluating Load Cases

You define load cases in the **Settings** window for the **Stationary** study. Follow these steps to create load cases:

1 In the **Model Builder** under **Study**, in the **Settings** window for **Stationary** ( ), click to expand the **Study Extensions** section.

2 Select the **Define load cases** check box (see Figure 3-25).

3 In the **Define load cases** area, click the **Add** ( ) button underneath the table to add a load case.

4 The added load case appears last in the table of load cases. Use the **Move Up** ( ), **Move Down** ( ), and **Delete** ( ) buttons to rearrange the load cases in the table, and click the **Add** ( ) button to add more load cases.

5 For each load case, you can change its name from the default (Load case 2, for example) in the **Load case** column.

6 Include the load groups and constraint groups for each load case by clicking the in the columns for the groups to include. The symbol changes to in order to indicate that the group participates in the load case.

7 For load groups, optionally change the weight from its default value of 1.0 in the corresponding **Weight** column (the **Weight** column to the right of the load group that it affects). Use a positive value other than 1 to increase or decrease the magnitude of the load; a negative value also reverses the load's direction.

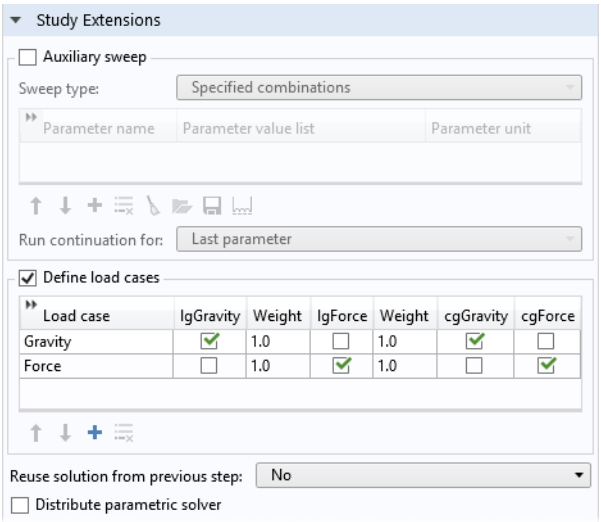

Figure 3-25: An example of the Stationary node's Study Extensions section. Click in the table of load cases to select or remove loads and constraints from the load case.

When you have defined all load cases, you can compute the solution. The COMSOL Multiphysics software then solves for all load cases directly. In the plot groups that are created, a **Load case** list in the **Data** section of the **Settings** window for **Plot Group** contains all load cases. To plot using the solution for a specific load case, select the load case of interest from the **Load case** list, and then click **Plot** ( ).

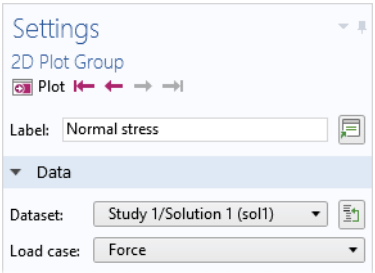

- Introduction to Solvers and Studies
- Stationary study step

Numerical Stabilization

About Numerical Stabilization in COMSOL

This section discusses the numerical stability of the generic scalar convection-diffusion transport equation

$$\frac{\partial u}{\partial t} + \beta \cdot \nabla u = \nabla \cdot (c \nabla u) + F \tag{3-3}$$

where β is the convective velocity vector, c is the diffusion coefficient, u is a transported scalar, and F is a source term. The underlying finite element discretization method in COMSOL Multiphysics is the Galerkin method. When discretizing Equation 3-3 using the Galerkin method, the resulting numerical problem becomes unstable for an element Péclet number (Pe) larger than one (Ref. 1):

$$\mathrm{Pe} = \frac{\|\beta\| h}{2c} > 1 \tag{3-4}$$

where h is the mesh element size. The Péclet number is a measure of the relative importance of the convective effects compared to the diffusive effects; a large Péclet number indicates that the convective effects dominate over the diffusive effects.

Oscillations can occur where any of the following conditions exist and the Péclet number exceeds one:

- A Dirichlet boundary condition can lead to a solution containing a steep gradient near the boundary, forming a boundary layer. If the mesh cannot resolve the boundary layer, this creates a local disturbance.
- A space-dependent initial condition that the mesh does not resolve can cause a local initial disturbance that propagates through the computational domain.
- A small initial diffusion term close to a nonconstant source term or a nonconstant Dirichlet boundary condition can result in a local disturbance.

As long as diffusion is present, there is — at least in theory — a mesh resolution beyond which the discretization is stable. This means that the spurious oscillations can be removed by refining the mesh. In practice, this method is seldom feasible because it can require a very dense mesh. Instead, it is common practice to use stabilization methods — that is, methods that add artificial diffusion. The COMSOL products include several such methods, some of which are described in An Example of Stabilization.

Consistent Stabilization and Inconsistent Stabilization Sections on Settings Windows

Numerical stabilization is available for physics interfaces that model transport such as fluid flow or convective heat transfer, where the fundamental governing equations are less stable than, for example, conduction-dominated models, solid mechanics models, and wave propagation in the frequency domain.

Several physics interfaces have these settings available, and below you find the common information about the stabilization settings. Differences not described below are noted for the individual interface documentation.

CONSISTENT STABILIZATION

To enable this section, click the **Show More Options** button ( ) and select **Stabilization** in the **Show More Options** dialog box.

There are two *consistent stabilization methods*: **Streamline diffusion** and **Crosswind diffusion**. Usually, both check boxes for these methods are selected by default and should remain selected for optimal performance. Consistent stabilization methods do not perturb the original transport equation.

Crosswind Diffusion and Lower Gradient Limit

In some cases, if the **Crosswind diffusion** check box is selected, the **Lower gradient limit** g_{lim} (SI unit: K/m) field is available. This variable corresponds to the smallest concentration change across an element considered by the stabilization, and is used to make sure that the crosswind diffusion expressions are valid also in regions with small to negligible concentration changes.

Residual

In some cases, and for both consistent stabilization methods, select a **Residual** (or **Equation Residual**). **Approximate residual** is the default setting and it means that derivatives of the diffusion tensor components are neglected. This setting is usually accurate enough and is faster to compute. If required, select **Full residual** instead.

INCONSISTENT STABILIZATION

To enable this section, click the **Show More Options** button ( ) and select **Stabilization** in the **Show More Options** dialog box.

There is usually just one *inconsistent stabilization method* — **Isotropic diffusion**. This method is equivalent to adding a term to the diffusion coefficient in order to dampen the effect of oscillations by making the system somewhat less dominated by convection. If possible, minimize the use of the inconsistent stabilization method because by using it you no longer solve the original problem. By default, the **Isotropic diffusion** check box is not selected because this type of stabilization adds artificial diffusion and affects the accuracy of the original problem. However, this option can be used to get a good initial guess for underresolved problems.

If required, select the **Isotropic diffusion** check box and enter a **Tuning parameter** δ_{id} as a scalar positive value. The default value is 0.25 (a reasonable value to start with is roughly 0.5 divided by the element order). A higher value adds more isotropic diffusion.

- An Example of Stabilization
- Stabilization Techniques

An Example of Stabilization

This example uses the Heat Transfer interface. To illustrate the concepts, consider the problem

$$\cos\left(\frac{\pi}{3}\right)\frac{\partial u}{\partial x} + \sin\left(\frac{\pi}{3}\right)\frac{\partial u}{\partial y} = 10^{-4}\left(\frac{\partial^2 u}{\partial x^2} + \frac{\partial^2 u}{\partial y^2}\right) + 1 \tag{3-5}$$

solved on the unit square. Equation 3-5 is discretized using 10 times 10 quadratic Lagrangian elements. The boundary conditions are:

- $u = 1$ for $x = 0$
- $u = 1$ for $y = 0$
- $u = 0$ for $x = 1$
- $u = 0$ for $y = 1$

Figure 3-26 shows the mesh and boundary conditions. In general, using uniform meshes for transport problems is not recommended. Nevertheless, this example uses a uniform mesh to demonstrate the different stabilization techniques.

The expected solution rises slowly and smoothly from the left and lower boundaries and has sharp boundary layers along the upper and right boundaries. Figure 3-27 shows a reference solution obtained using 100-by-100 quadratic Lagrangian elements with streamline diffusion and crosswind diffusion (see the next section). The arrows indicate the direction of β.

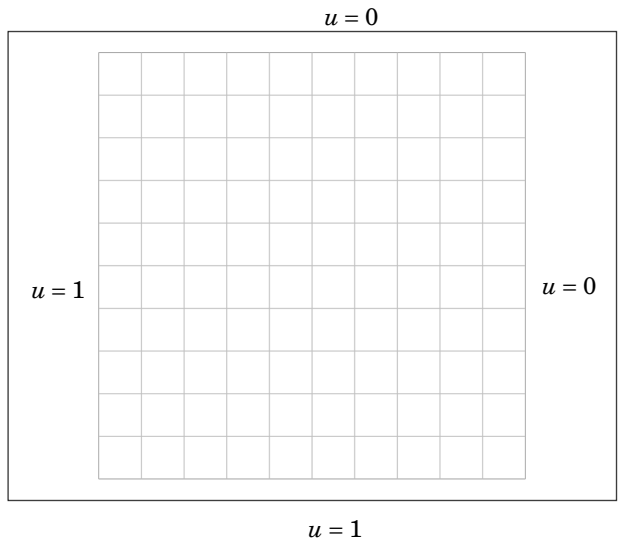

Figure 3-26: The computation domain, mesh, and boundary condition for Equation 3-5.

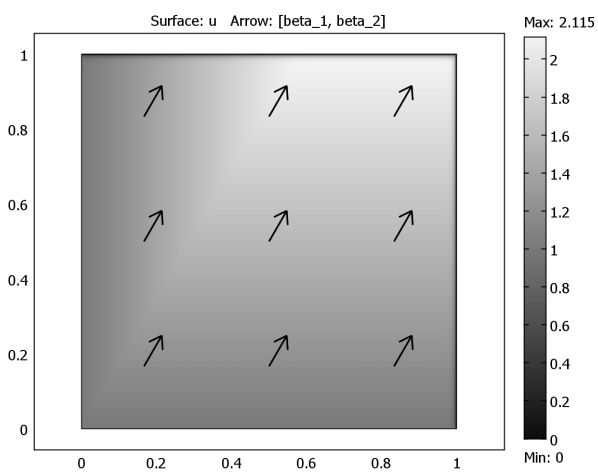

Figure 3-27: Reference solution of Equation 3-5. *Solved using 100 times 100 quadratic elements with streamline diffusion and crosswind diffusion.*

The cell Péclet number for this example is

$$\mathrm{Pe} = \frac{1 \cdot 0.1}{2 \cdot 10^{-4}} = 500 >> 1$$

Figure 3-28 displays the solution obtained using the mesh in Figure 3-26 and (unstabilized) Galerkin discretization. As can be expected with such a high Péclet number, the unstabilized solution shows little, if any, resemblance to the reference solution in Figure 3-27. The right plot in Figure 3-28 shows a cross-sectional plot along the dashed line, $y = 0.8$ and the corresponding reference solution. Notice that the unstabilized solution is destroyed by oscillations.

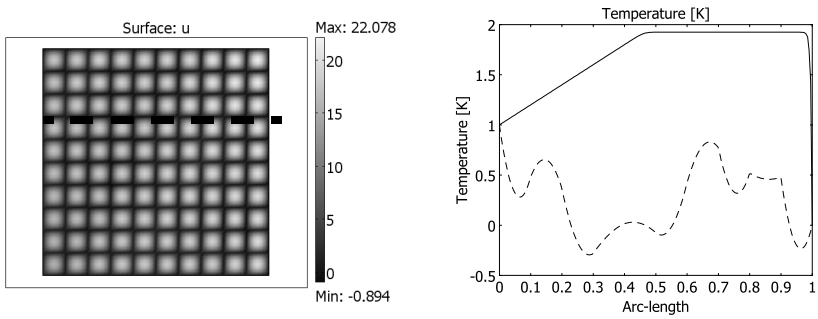

Figure 3-28: Equation 3-5 *solved using unstabilized Galerkin formulation. The right plot compares the unstabilized solution (dashed line) along the dashed line in the left plot (y = 0.8) with the reference solution (solid line).*

The Stabilization Techniques section explores how different stabilization techniques affect the solution of this example.

Stabilization Techniques

Several techniques for handling numerical instabilities without the need for mesh refinement are available. They all have in common that they add terms to the transport equation. These terms introduce numerical diffusion (artificial diffusion, artificial viscosity, or numerical viscosity are other common names) that stabilize the solution. To display these sections, click the **Show More Options** button ( ) and select **Stabilization** in the **Show More Options** dialog box.

- Heat Transfer Consistent and Inconsistent Stabilization Methods
- Numerical Stability — Stabilization Techniques for Fluid Flow

CONSISTENT STABILIZATION

A consistent stabilization method adds numerical diffusion in such a way that if u is an exact solution to Equation 3-3, then it is also a solution to the problem with numerical diffusion. In other words, a consistent stabilization method gives less numerical diffusion the closer the numerical solution comes to the exact solution.

INCONSISTENT STABILIZATION

An inconsistent stabilization method adds numerical diffusion in such a way that if u is an exact solution to Equation 3-3, then it is not necessarily a solution to the problem with numerical diffusion. In other words, an inconsistent method adds a certain amount of diffusion independently of how close the numerical solution is to the exact solution.

ISOTROPIC DIFFUSION

Adding isotropic diffusion is equivalent to adding a term,

$$c_{\mathrm{art}} = \delta_{\mathrm{id}} h \|\beta\|$$

to the physical diffusion coefficient, c. Here δ_{id} is a tuning parameter. This means that you do not solve the original problem, Equation 3-3, but rather the modified $O(h)$-perturbed problem

$$\frac{\partial u}{\partial t} + \beta \cdot \nabla u = \nabla \cdot ((c + c_{\mathrm{art}})\nabla u) + F \tag{3-6}$$

Hence, isotropic diffusion is an inconsistent stabilization method. If $\delta_{\mathrm{id}} = 0.5$, the new cell Péclet number can be expressed as

$$\mathrm{Pe} = \frac{h\|\beta\|}{2(c + c_{\mathrm{art}})} = \frac{h\|\beta\|}{2c + h\|\beta\|}$$

Clearly, as $\|\beta\|$ approaches infinity, Pe approaches, but never exceeds, one. While a solution obtained with isotropic diffusion might not be satisfactory in all cases, the added diffusion definitely dampens the effects of oscillations and impedes their propagation to other parts of the system. It is not always necessary to set δ_{id} as high as 0.5 to get a smooth solution, and its value should be smaller if possible. A good rule of thumb is to select $\delta = 0.5/p$, where p is the order of the basis functions. The default value is $\delta_{\mathrm{id}} = 0.25$

Figure 3-29 shows the effect of isotropic diffusion on Equation 3-5 with $\delta_{\mathrm{id}} = 0.25$. Although the solution is smooth, the comparison with the reference solution in the right plot reveals that the isotropic diffusion introduces far too much diffusion.

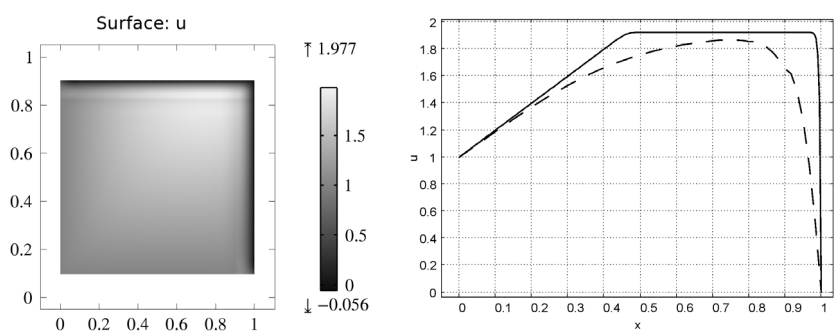

Figure 3-29: Equation 3-5 *solved using isotropic diffusion. The right plot compares the stabilized solution (dashed line) along y = 0.8 with the reference solution (solid line).*

STREAMLINE DIFFUSION

The streamline diffusion method in the COMSOL Multiphysics software is a consistent stabilization method. When applied to Equation 3-3, it recovers the streamline upwind Petrov-Galerkin (SUPG) method, but it can also recover functionality from the Galerkin least-squares (GLS) method. Both methods are described below. For theoretical details, see Ref. 1 and Ref. 2.

Streamline Upwind Petrov-Galerkin (SUPG)

The theory underlying SUPG is a bit too complicated to describe here, but the resulting expressions can be shown to be closely related to upwinding schemes in finite difference and finite volume methods. SUPG can be shown to add a smaller amount of stability than isotropic diffusion (see Ref. 3), but while the accuracy of isotropic diffusion is at best $O(h)$, the accuracy of SUPG can be shown to be at least $O(h^{p+1/2})$ where $p \geq 1$ is the order of the basis functions.

Figure 3-30 displays the effect of SUPG on the solution of Equation 3-5. The solution closely follows the reference solution away from the boundary layers, but at the boundary layers, oscillations occur. This is a typical behavior for streamline diffusion: the solution becomes smooth and exact in smooth regions but can contain local oscillations at sharp gradients.

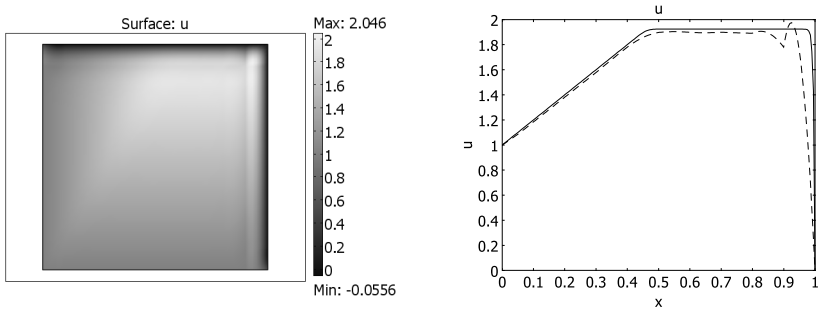

Figure 3-30: Equation 3-5 *solved using streamline diffusion. The right plot compares the stabilized solution (dashed line) along y = 0.8 with the reference solution (solid line).*

Galerkin Least-Squares (GLS)

Galerkin least-squares (GLS) is a more advanced version of SUPG, with which it shares many features. GLS, for example, is also a consistent method and has the same order of accuracy as SUPG. To understand the differences between GLS and SUPG, consider the following extended form of Equation 3-3:

$$\frac{\partial u}{\partial t} + \beta \cdot \nabla u = \nabla \cdot (c \nabla u) + su + F \tag{3-7}$$

where s is a production coefficient if $s > 0$ and an absorption coefficient if $s < 0$. If $s \neq 0$, the numerical solution of Equation 3-7 is characterized by the Péclet number (see Equation 3-4) and the element Damköhler number:

$$\mathrm{Da} = \frac{|s|h}{\|\beta\|}$$

A new dimensionless number can be formed by combining the Damköhler number and the Péclet number:

$$2\mathrm{DaPe} = \frac{|s|h^2}{c} \tag{3-8}$$

The (unstabilized) Galerkin discretization becomes unstable if $2\mathrm{DaPe} > 1$ (Ref. 4), that is, if the production/absorption effects dominate over the viscous effects. GLS differs from SUPG in that GLS relaxes this requirement while SUPG does not.[1]

CROSSWIND DIFFUSION

Streamline diffusion introduces artificial diffusion in the streamline direction. This is often enough to obtain a smooth numerical solution if the exact solution of Equation 3-3 (or Equation 3-7) does not contain any discontinuities. At sharp gradients, however, undershoots and overshoots can occur in the numerical solutions (see Figure 3-30). Crosswind diffusion addresses these spurious oscillations by adding diffusion orthogonal to the streamline direction — that is, in the crosswind direction.

Crosswind diffusion methods are consistent, but they are also nonlinear. This means that the discrete equation system becomes nonlinear even if the original equation (Equation 3-3 or Equation 3-7) is linear, which can increase the computational cost.

	Use crosswind diffusion if it is important to avoid undershoots or overshoots. Typical examples are concentrations that must not become negative and mass fractions that must be between zero and one.

1. The streamline diffusion stabilization in COMSOL Multiphysics is GLS but without any viscous terms in the test operator in the stabilization term.

The crosswind diffusion option adds a weak contribution as suggested in Ref. 5. For the scalar example here, the term reads

$$-\nu^h \frac{\partial c}{\partial x_i} g^{ij} \frac{\partial c}{\partial x_j}$$

where g^{ij} is the covariant metric tensor. The coefficient ν^h is for Navier-Stokes systems a modified version of the Hughes-Mallet (HM) formulation of Ref. 6. In the scalar case, the modified HM formulation reduces effectively to the form suggested in Ref. 6. Additionally, Ref. 7 suggests to reduce ν^h for higher-order elements. The formulation in the COMSOL Multiphysics software multiplies ν^h with a factor

$$(\sqrt{2})^{1-N}$$

where N is the shape function order.

Figure 3-31 shows the example problem (Equation 3-5) solved using streamline diffusion and crosswind diffusion. Oscillations at the boundary layers are almost completely removed (compare with Figure 3-30), but it has been achieved by the introduction of some extra diffusion. In general, crosswind diffusion tries to smear out the boundary layer so that it becomes just wide enough to be resolved on the mesh (Figure 3-26). To obtain a sharper solution and remove the last oscillations, the mesh needs to be refined locally at the boundary layers.

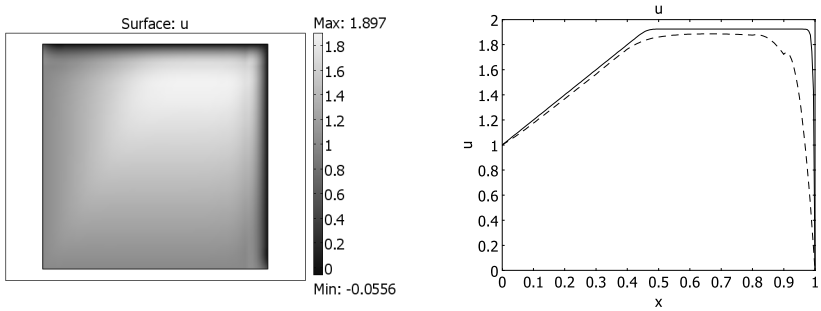

Figure 3-31: Equation 3-5 *solved using streamline diffusion and crosswind diffusion. The right plot compares the stabilized solution (dashed line) along y = 0.8 with the reference solution (solid line).*

References for Stabilization Techniques

1. O.C. Zienkiewicz, R.L. Taylor, and P. Nithiarasu, *The Finite Element Method for Fluid Dynamics*, 6th ed., Elsevier, 2005.

2. R. Codina, "Comparison of Some Finite Element Methods for Solving the Diffusion-Convection-Reaction Equation", *Comput. Methods Appl. Mech. Engrg.*, vol. 156, pp. 185–210, 1998.

3. C. Johnson, *Numerical Solution of Partial Differential Equations by the Finite Element Method*, Student literature, 1987.

4. G. Hauke, "A Simple Subgrid Scale Stabilized Method for the Advection-Diffusion-Reaction Equation", *Comput. Methods Appl. Mech. Engrg.*, vol. 191, pp. 2925–2947, 2002.

5. G. Hauke and T.J.R. Hughes, "A comparative study of different sets of variables for solving compressible and incompressible flows", *Computer Methods in Applied Mechanics and Engineering,* vol. 153, pp. 1–44, 1998.

6. E.G.D. do Carmo and A.C. Galeão, "Feedback Petrov-Galerkin methods for convection-dominated problems", *Computer Methods in Applied Mechanics and Engineering*, vol. 88, pp. 1–16, 1991.

7. E.G.D. do Carmo and G.B. Alvarez, "A new upwind function in stabilized finite element formulations, using linear and quadratic elements for scalar convection-diffusion problems", *Computer Methods in Applied Mechanics and Engineering*, vol. 193, pp. 2383–2402, 2004.

Using Units

The COMSOL Multiphysics software supports a number of consistent unit systems, including the SI unit system, which is the default unit system. The physics interface displays the unit for the physical quantities entered in the selected unit system, but by Using Standard Unit Prefixes and Syntax you can use any available and applicable unit or SI prefix to define your input quantities. In addition to SI units, many English units and units from the CGS (or cgs) system are also available, regardless of the unit system used in the model. All data in the material databases and Material Library product use SI units with declared units using the unit syntax (see Materials). This makes it possible to use the material data also in models with non-SI unit systems. Regardless of the selected unit system, you can always choose from a list of applicable units for plotting and results evaluation.

In the unit tables, "N/A" means that no unit symbol is available.

- Unit Systems
- Indication of Unexpected, Unknown, or Inconsistent Units
- Setting the Unit System for Models

Using Standard Unit Prefixes and Syntax

STANDARD UNIT PREFIXES

For SI units you can scale data using the standard prefixes for powers of 10 — *kilo*, *mega*, *milli*, or *micro*, for example. Either the full prefix or the symbol can be used, but you must use the same form for the prefix and the unit — that is, `[milliampere]` and `[mA]` are valid but not `[mampere]` or `[milliA]`). In the **Settings** windows for plotting and numerical results, the **Unit** list contains the SI unit for the quantity, including the most common prefixes. The lists also contain applicable non-SI units, which in some cases also support these prefixes — for example, for `g` (gram), `G` (gauss), and `M` (molar).

Use Table 3-7 as a guide for the format to enter.

TABLE 3-7: SI PREFIXES

FULL PREFIX	SYMBOL	FACTOR
yotta	Y	10^{24}
zetta	Z	10^{21}
exa	E	10^{18}
peta	P	10^{15}
tera	T	10^{12}
giga	G	10^{9}
mega	M	10^{6}
kilo	k	10^{3}
hekto	h	10^{2}
deca	da	10^{1}
deci	d	10^{-1}
centi	c	10^{-2}
milli	m	10^{-3}

TABLE 3-7: SI PREFIXES

FULL PREFIX	SYMBOL	FACTOR
micro	u	10^{-6}
nano	n	10^{-9}
pico	p	10^{-12}
femto	f	10^{-15}
atto	a	10^{-18}
zepto	z	10^{-21}
yocto	y	10^{-24}

STANDARD UNIT SYNTAX

You can use the unit syntax to specify a quantity with any applicable unit. To do so, append the unit to any constant or variable in a model using a syntax where you enclose the unit in brackets, for example, `200[ft]` and `3e6[kg/m^3]`.

Both the name and the symbol can be used for a unit (but only names that form a single word without spaces or hyphens are possible to use). For example, `2.4[ampere]` and `2.4[A]` are both valid to indicate an electric current in SI units. The SI units can also contain standard prefixes. Appending a unit means that you *multiply* the constant or variable to the left of the unit declaration with this unit. This multiplication takes precedence over other operators so, for example, `1/2[m]` evaluates to 0.5 m^{-1} (`0.5[1/m]`) whereas both `(1/2)[m]` and `1/2*1[m]` evaluate to 50 cm (`0.5[m]` or `50[cm]`). Also, if `L` is a variable defined as `2[m]`, `L[1/s]` evaluates to `2[m/s]`.

The following examples show how to apply the unit syntax:

- Adding two quantities of the same kind that use different units: `0.5[ft]+33[mm]`. The COMSOL Multiphysics software converts the result to the base unit system's length unit (0.1854 m for SI units, for example). A quantity without a unit is treated as given in the base unit's systems unit, so, for example, `0.5+33[mm]` evaluates to 0.533 m when using SI units.
- Using multiplication with a unit to get consistent units for two quantities that you want to add, for example, `14[kg]+ht.rho[m^3]`, which works if `ht.rho` represents the density for a heat transfer model. You can also concatenate several units, for example, `3.6[N][m]`, which is equivalent to typing `3.6[N*m]` and evaluates to `3.6 N·m`.

For unit names with spaces and hyphens, such as *British thermal unit* and *pound-force*, only use the symbols when declaring units.

It is possible to add constants (without units) to any quantity. The COMSOL Multiphysics software then assumes that this value has the same unit as that quantity (as indicated in the **Settings** window).

All data in the material databases and Material Library product use SI units and this unit syntax.

DECLARING UNITS FOR PARAMETERS, VARIABLES, AND FUNCTIONS

It is important to be aware of the following aspects of unit handling.

When using parameters, variables, and functions in expressions:

- If user-defined parameters or variables are used in the physics, it is good practice to use the unit syntax to define them. The **Settings** windows for parameters and variables display the resulting unit, in the models base unit

system, of user-defined parameters and variables. It is important to verify that the variables have the expected unit before using them in the physics settings. The unit of parameters and variables is otherwise undefined.

- Most user-defined and built-in functions expect dimensionless inputs and outputs, so it is good practice to use make inputs, such as time, dimensionless using unit syntax. If the input is not dimensionless, the COMSOL Multiphysics software marks the expression in an orange color and reports an unexpected unit of input. For example, to use the time *t* as input to a Rectangle function `rect1`, use `[1/s]` to make the input dimensionless: `rect1(t[1/s])`.
- Using properties with undefined units in a model does not affect the numerical results during the analysis, but undefined units are required in the results and visualization stages — expressions involving such parameters and variables are also unitless.
- If other units than the base unit system's units are used or if SI prefixes are included, the conversion to base units also affects the value (quantity) using a scaling factor (and an offset for temperature units). The **Value** column in a **Settings** window for **Parameter** displays the quantity and unit in the base unit system so that you can see the result of the unit conversion. For example, a parameter is defined as `3[ft]`, the result in the **Value** column is **0.9144 m** if the base unit system is SI.

SI Base, Derived, and Other Units

The SI units form an internationally accepted system with seven units for base quantities and a large number of derived units. Use the symbols for these and other units when declaring units in COMSOL (for example, `10[m/s]` uses the SI unit for velocity).

- Table 3-8 lists the SI units for the seven base quantities.
- Table 3-9 lists the SI derived units supported in COMSOL Multiphysics.
- Table 3-10 lists additional units available in the COMSOL Multiphysics software regardless of the unit system in the model. If more than one name or symbol is available, use any of them, except when names contain more than one word or a hyphen. See also the tables with special units for other unit systems than the SI system; special units that are not listed in Table 3-10 are only available when using such non-SI unit systems.
- Table 3-11 lists other SI derived units without special names or symbols.

TABLE 3-8: BASE SI UNITS

BASE QUANTITY	UNIT NAME	SYMBOL
length	meter, metre*	m
mass	kilogram	kg
time	second	s
electric current	ampere	A
temperature	kelvin**	K
amount of substance	mole	mol
luminous intensity	candela	cd

* See About Editing Geometry Length and Angular Units

**See About Temperature Units

TABLE 3-9: SI DERIVED UNITS IN COMSOL

DERIVED QUANTITY	NAME	SYMBOL
absorbed dose	gray	Gy
capacitance	farad	F
conductance	siemens	S
dose equivalent	sievert	Sv

TABLE 3-9: SI DERIVED UNITS IN COMSOL

DERIVED QUANTITY	NAME	SYMBOL
electric charge	coulomb	C
electric resistance, impedance, reactance	ohm*	Ω
electric potential difference, voltage	volt	V
energy, work, heat	joule	J
force, weight	newton	N
frequency	hertz	Hz
inductance	henry	H
magnetic flux	weber	Wb
magnetic flux density, magnetic induction	tesla	T
plane angle	radian	rad
power	watt	W
pressure	pascal	Pa
* See the additional notes following the next table.		

TABLE 3-10: ADDITIONAL UNITS IN COMSOL

QUANTITY	NAME	SYMBOLS	VALUE
acceleration	galileo	Gal	0.01 m/s^2
acoustic impedance	rayl*	rayl, rayl_cgs	1 Pa·s/m (rayl), 10 Pa·s/m (rayl_cgs)
dimensionless value	percent	%	0.01
dimensionless value	partspermillion (parts per million)	ppm	10^{-6}
dipole moment	debye	D	$3.33564095 \cdot 10^{-30}$ C·m
dynamic viscosity	poise	P	0.1 Pa·s
electric charge	amperehour	Ah	3600 C
energy	British thermal unit*	BTU, Btu	1055.05585 J
energy	calorie*	cal	4.184 J
energy	electronvolt	eV	$1.6021765314 \cdot 10^{-19}$ J
energy	erg	erg	10^{-7} J
energy	watthour	Wh	3600 J
force	dyne	dyn	10^{-5} N
force	kilopond*	kp, kpf	9.80665 N
force	poundal	pdl	0.138254954376 N
force	pound-force	lbf	4.4482216152605 N
frequency	rpm	RPM	1/60 Hz
length	angstrom	Å	10^{-10} m
length	inch	in	0.0254 m
length	foot	ft	0.3048 m
length	mile*	mi	1609.344 m
length	microinch	uin	$0.0254 \cdot 10^{-6}$ m
length	milliinch	mil, thou	$0.0254 \cdot 10^{-3}$ m
length	nautical mile*, nautimile	nmi	1852 m
length	yard	yd	0.9144 m

TABLE 3-10: ADDITIONAL UNITS IN COMSOL

QUANTITY	NAME	SYMBOLS	VALUE
magnetic field strength	oersted	Oe	$10^3/(4\cdot\pi)$ A/m
magnetic flux density	gauss	G	10^{-4} T
mass	atomic mass unit, dalton	u, amu, Da	$1.660538782\cdot10^{-27}$ kg
mass	gram	g	0,001 kg
mass	ounce	oz	0.028349523 kg (1/16 lb)
mass	pound, pound-mass	lb, lbm	0.45359237 kg
mass	stone	st	6.35029318 kg
mass	slug	slug	approx. 14.5939 kg
mass	ton, tonne	t	1000 kg
molar concentration (molarity)	molar	M	1000 mol/m^3
permeability	millidarcy*	mD	$9.869233\cdot10^{-16}$ m^2
plane angle	arcminute	arcmin	$\pi/10800$
plane angle	arcsecond	arcsec	$\pi/648000$
plane angle	degree	deg	$\pi/180$
pressure	atmosphere	atm	101325 Pa
pressure	bar	bar	100000 Pa
pressure	barye	ba	0.1 Pa
pressure	kilopound per square inch*	ksi	$6.894757\cdot10^6$ Pa (1000 psi)
pressure	psi	psi	$6.894757\cdot10^3$ Pa
pressure	torr	Torr, mmHg	133.322 Pa
pressure	inches water*	inAq, inH2O	249.089 Pa
pressure	millimeters water*	mmH2O	9.0866 Pa
speed	mph, MPH	mph	0.44704 m/s
speed	knot*	knot	1852 km/h (approx. 0.614 m/s)
temperature	Celsius**	degC	T+273.15
temperature	Fahrenheit**	degF	5/9·T+459.67
temperature	Rankine**	R, Ra	5/9·T
time	year*	a, yr	31556952 s
time	day	d	86400 s
time	hour	h	3600 s
time	minute	min	60 s
volume	fluid ounce*	fl_oz	$2.8413063\cdot10^{-5}$ m^3
volume	gallon*	gal	0.003785411784 m^3
volume	imperialgallon	impgal	0.00454609 m^3
volume	liter, litre	L, l	0.001 m^3
volume	pint*	pt	0.000473176473 m^3
volume	quart*	qt	0.000946352946 m^3
volumetric flow rate	cubic feet per minute	CFM, cfm	$4.719474\cdot10^{-4}$ m^3/s

* See the additional notes following this table.

** See About Temperature Units

ADDITIONAL NOTES ABOUT UNITS IN Table 3-9 AND Table 3-10	
UNIT NAME	**NOTE**
British thermal unit	An energy unit defined as the amount of heat required to raise the temperature of one pound (pound-mass) of water by one degree from 60° to 61° Fahrenheit at a constant pressure of one atmosphere. Refer to the British thermal unit using the symbol only (Btu or BTU): for example, `0.28[Btu/(h*in*degF)]` for a thermal conductivity.
calorie	Small calorie or gram calorie, which equals 4.184 J. A large calorie or kilogram calorie is 1000 calories (4.184 kJ). Use [kcal] for large calories.
fluid ounce	The fluid ounce is equal to 1/160 of an imperial gallon: $2.8413063 \cdot 10^{-5}$ m^3; that is, an imperial fluid ounce. You can refer to this unit using `fluid_ounce` (as the unit) or `fl_oz` (as the symbol).
kilopond	The kilopond (kp) or kilogram-force (kpf) is a gravitational metric unit of force. Refer to this unit using kilopond, kp, or kpf only.
kilopound per square inch	The kilopound per square inch (ksi) is a scaled pressure unit derived from psi (1 ksi is equal to 1000 psi). Refer to this unit using the symbol only (ksi).
millidarcy (mD)	Widely used for permeability in petroleum engineering. Typical values for the permeability of porous media are in the range of a few to a few hundred mD. The symbol D represents the debye, a unit for the magnetic dipole moment, and not the darcy unit.
mile	The international statute mile, which equals 1609.344 m.
nautimile	The nautical mile equals 1852 m.
ohm	To declare the SI unit for electric resistance, ohm, use [ohm]. The COMSOL Multiphysics software then displays this as Ω.
inches water	The value of 1 inch of water is defined as the pressure exerted by one inch of water for a pure water density of 1000 kg/m^3 at 4 degrees Celsius and standard gravity of 9.80665 m/s^2. Refer to this unit using the symbol only (inH2O or inAq).
millimeters water	Millimeters water or millimeters, water gauge, is defined as the pressure exerted by one millimeter of water for a pure water density of 1000 kg/m^3 at 4 degrees Celsius and standard gravity of 9.80665 m/s^2. Refer to this unit using the symbol only (mmH2O).
knot	The same as nautical miles per hour.
year	A Gregorian year, which equals 365.2425 days.
gallon (gal)	This is the U.S. liquid gallon which equals 0.00378541 1784 m^3; the Imperial (UK) gallon (imperialgallon, impgal) is equal to 0.00454609 m^3.
pint and quart	The U.S. liquid pint and U.S. liquid quart, respectively.
rayl and rayl_cgs	The rayl (Rayl, Rayleigh) is a unit for the specific acoustic impedance. There are two variants, rayl, for MKS units, and rayl_cgs, for CGS units, where 1 rayl_cgs = 10 rayl. Refer to this unit the symbols only (rayl and rayl_cgs).

TABLE 3-11: EXAMPLES OF SI DERIVED UNITS WITHOUT SPECIAL NAMES

DERIVED QUANTITY	NAME	SYMBOL
acceleration	meter per second squared	m/s^2
amount-of-substance concentration	mole per cubic meter	mol/m^3
area	square meter	m^2
current density	ampere per square meter	A/m^2
heat capacity, specific heat	joule per kilogram kelvin	J/(kg·K)
magnetic field strength	ampere per meter	A/m
mass density	kilogram per cubic meter	kg/m^3
permeability	henry per meter	H/m
speed, velocity	meter per second	m/s

TABLE 3-11: EXAMPLES OF SI DERIVED UNITS WITHOUT SPECIAL NAMES

DERIVED QUANTITY	NAME	SYMBOL
wave number	reciprocal meter	m^{-1}
volume	cubic meter	m^3

Special British Engineering Units

The base units in the British engineering unit system are identical to the SI units with the following exceptions:

TABLE 3-12: SPECIAL BASE UNITS IN THE BRITISH ENGINEERING UNIT SYSTEM

BASE QUANTITY	NAME	SYMBOL
length	foot	ft
mass	slug	N/A
temperature	Fahrenheit	degF

There is one derived unit that differs from the corresponding SI unit:

TABLE 3-13: DERIVED BRITISH ENGINEERING UNITS IN COMSOL

DERIVED QUANTITY	NAME	SYMBOL
force	pound-force	lbf

The British thermal unit is also available as Btu or BTU.

If the British engineering unit system is the base unit system, the COMSOL Multiphysics software constructs derived units from the applicable SI base units and the units listed in Table 3-12 and Table 3-13. This means, for example, that the unit for voltage displayed in the physics interface is lbf·ft/As rather than V (volt). In a text field that expects a voltage as input, you need to use the unit syntax when entering a numerical value, for example, `10[V]`.

Special CGSA Units

The base units in the CGSA unit system are identical to the SI units with the following exceptions:

TABLE 3-14: SPECIAL BASE UNITS IN THE CGSA UNIT SYSTEM

BASE QUANTITY	NAME	SYMBOL
length	centimeter	cm
mass	gram	g

The CGSA unit system includes the following derived units that differ from the corresponding SI units:

TABLE 3-15: DERIVED CGSA UNITS IN COMSOL

DERIVED QUANTITY	NAME	SYMBOL
acceleration	galileo	Gal
energy	erg	N/A
force	dyne	dyn
pressure	barye	N/A
speed	kyne	N/A

Special EMU Units

The base units in the EMU unit system are identical to the SI units with the following exceptions:

TABLE 3-16: SPECIAL BASE UNITS IN THE EMU UNIT SYSTEM

BASE QUANTITY	NAME	SYMBOL
length	centimeter	cm
mass	gram	g
electric current	abampere, biot	N/A

The EMU unit system includes the following derived units that differ from the corresponding SI units:

TABLE 3-17: DERIVED EMU UNITS IN COMSOL

DERIVED QUANTITY	NAME	SYMBOL
acceleration	galileo	Gal
capacitance	abfarad	N/A
conductance	absiemens	N/A
electric charge	abcoulomb	N/A
electric resistance	abohm	N/A
electric potential difference, voltage	abvolt	N/A
energy	erg	N/A
force	dyne	dyn
inductance	abhenry	N/A
magnetic flux	abweber	N/A
magnetic flux density	abtesla	N/A
pressure	barye	N/A
speed	kyne	N/A

Special ESU Units

The base units in the ESU unit system are identical to the SI units with the following exceptions:

TABLE 3-18: SPECIAL BASE UNITS IN THE ESU UNIT SYSTEM

BASE QUANTITY	NAME	SYMBOL
length	centimeter	cm
mass	gram	g
electric current	statampere, franklin	N/A

The ESU unit system includes the following derived units that differ from the corresponding SI units:

TABLE 3-19: DERIVED ESU UNITS IN COMSOL

DERIVED QUANTITY	NAME	SYMBOL
acceleration	galileo	Gal
capacitance	statfarad	N/A
conductance	statsiemens	N/A
electric charge	statcoulomb	N/A
electric resistance	statohm	N/A
electric potential difference, voltage	statvolt	N/A
energy	erg	N/A

TABLE 3-19: DERIVED ESU UNITS IN COMSOL

DERIVED QUANTITY	NAME	SYMBOL
force	dyne	dyn
inductance	stathenry	N/A
magnetic flux	statweber	N/A
magnetic flux density	stattesla	N/A
pressure	barye	N/A
speed	kyne	N/A

Special FPS Units

The base units in the FPS unit system are identical to the SI units with the following exceptions:

TABLE 3-20: SPECIAL BASE UNITS IN THE FPS UNIT SYSTEM

BASE QUANTITY	NAME	SYMBOL
length	foot	ft
mass	pound	lb
temperature	Fahrenheit	degF

There is one derived unit that differs from the corresponding SI unit:

TABLE 3-21: DERIVED FPS UNITS IN COMSOL

DERIVED QUANTITY	NAME	SYMBOL
force	poundal	N/A

Special IPS Units

The base units in the IPS unit system are identical to the SI units with the following exceptions:

TABLE 3-22: SPECIAL BASE UNITS IN THE IPS UNIT SYSTEM

BASE QUANTITY	NAME	SYMBOL
length	inch	in
mass	pound	lb
temperature	Fahrenheit	degF

Special MPa Units

The base units in the MPa unit system are identical to the SI units with the following exceptions:

TABLE 3-23: SPECIAL BASE UNITS IN THE MPA UNIT SYSTEM

BASE QUANTITY	NAME	SYMBOL
length	millimeter	mm
mass	tonne, ton	t

There is one derived unit that differs from the corresponding SI unit:

TABLE 3-24: DERIVED MPA UNITS IN COMSOL

DERIVED QUANTITY	NAME	SYMBOL
pressure	megapascal	MPa

Special Gravitational IPS Units

The base units in the Gravitational IPS unit system are identical to the SI units with the following exceptions:

TABLE 3-25: SPECIAL BASE UNITS IN THE GRAVITATIONAL IPS UNIT SYSTEM

BASE QUANTITY	NAME	SYMBOL
length	inch	in
mass	GIPS_mass	N/A
temperature	Fahrenheit	degF

The following derived units differ from the corresponding SI units:

TABLE 3-26: DERIVED GRAVITATIONAL IPS UNITS IN COMSOL

DERIVED QUANTITY	NAME	SYMBOL
force	pound-force	lbf
pressure	psi	psi

Switching Unit System

If the unit system is switched during modeling, the COMSOL Multiphysics software does not convert the data in the model (except for length units and angular units in the geometry if specified). All physical constants and data in the material libraries are in SI units and defined using the unit syntax, so you can use them with any unit system because the COMSOL Multiphysics software converts these values to the corresponding values in the model's unit system.

The units of other input data must be declared for the model using the unit syntax (or manually convert the numerical values to the new unit system).

About Temperature Units

The relationship between different temperature units involves an offset in addition to the usual scale factor. The offset is often not important to the physics equations because these equations are concerned only with temperature differences. There are, however, some cases where an absolute or thermodynamic temperature measure must be used. One example is the Stefan-Boltzmann law for blackbody radiation used in radiation boundary conditions.

The SI unit system uses the kelvin, which is an absolute temperature, as the basic unit of temperature. English unit systems use degree Fahrenheit as the basic unit of temperature, which, because the Fahrenheit scale is not absolute, is fine for most purposes except radiation. For such purposes, the Rankine scale provides the corresponding absolute temperature unit. See Table 3-27 for a list of acceptable unit syntax.

TABLE 3-27: TEMPERATURE UNITS

SCALE	UNIT
Celsius	`[degC]`
Fahrenheit	`[degF]`
Kelvin	`[K]`
Rankine	`[R]` or `[Ra]`

DIFFERENTIAL VS. ABSOLUTE TEMPERATURE

If the dimension of an expression that includes a unit is temperature or 1/temperature, the COMSOL Multiphysics software interprets the dimension as an absolute temperature. If the dimension is something other than temperature

but the unit expression includes temperature, the temperature is a differential temperature; that is, the COMSOL Multiphysics software uses no offset when converting between different temperature units.

The following examples show how the unit conversion works for different expressions that include temperature units:

- `100[degC]` is an expression that has temperature as the dimension. The COMSOL Multiphysics software interprets it as an absolute temperature and evaluates it as 373.15 K.
- `373.15[1/K]` is interpreted as an absolute inverse temperature (but no conversion is necessary from kelvin to kelvin).
- `373.15[1/degC]` evaluates to `100[1/K]` using the offset of 273.15 degrees between kelvin and degrees Celsius.
- `100[degC/K]` is dimensionless, and the temperature is therefore a differential temperature; that is, the result is 100 because the conversion uses no offset.
- To make the COMSOL Multiphysics software interpret `100[degC/K]` as an absolute temperature, split the expression using two separate expressions such as `100[degC][1/K]`, which equals 373.15. This is also what occurs when you use a variable (`TC`, for example) defined as `100[degC]`. `TC[1/K]` is then also two expressions where both are interpreted as absolute temperature.
- For temperature units that require an offset and a scale factor to be converted to kelvin, it is not possible to convert them simply using a multiplication. While `293.15[K][1/degF]` produces the expected output, `68` (`68` degrees Fahrenheit corresponds to `293.15` kelvins), `293.15[K]*1[1/degF]` evaluates to something completely different. As mentioned in the previous point, `293.15[K/degF]` uses no offset and is also usually not the desired expression.

About Editing Geometry Length and Angular Units

The default units are meters for length and degrees for angles. For many applications, an independent length unit for the geometry might be required. For example, if the model describes a MEMS device, the natural length unit might be µm (micrometers), or the geometry imported from a CAD file might use another unit than meters. It can also be useful to specify the angular unit in radians instead.

The length unit for the geometry does not affect the units that include length in the physics interfaces or any other part of COMSOL Multiphysics.

1. Create or open a model file.
2. In the **Model Builder**, under a **Component** node, click the **Geometry** node.
3. Under **Units**, select a **Length unit** from the list.
4. Select an **Angular unit**: **Degrees** or **Radians**.
5. Select the **Scale values when changing units** check box to automatically scale for dimensions in the existing geometry.
6. Enter a **Default relative repair tolerance** and select a **Geometry representation**.

When importing 3D CAD geometries, you can choose to use the length unit from the CAD file or the length unit from the COMSOL Multiphysics software.

The Geometry Node

Units and Space Dimensions

Most physics interfaces support 2D (and in some cases also 1D) models in addition to 3D models. The units for intensive physical quantities such as density in the physics interfaces are the same regardless of the space dimension (for density, kg/m^3 in SI units). This makes it possible to use common material property values also in models with other space dimensions than 3D using their well-known, physical units regardless of the dimension you are modeling in. In planar 2D, this means that the implementation includes an implicit unit depth in the out-of-plane direction, except for some physics interfaces (for plane stress in solid mechanics and for electric currents, for example), where the thickness is a user-defined property that defines the volume of the model domain. In axisymmetric models, the volume of the domain is defined by the 2D cross section in the *rz*-plane that is the geometry you define for such models. The volume that it defines is the area of the 2D cross section integrated a full 360 degrees in the circumferential direction.

4

Customizing the COMSOL Desktop

This chapter describes a variety of tasks that can organize and simplify the model building process. For example, set the layout and other features of the COMSOL Desktop using the Preferences settings, change the language and fonts, restrict or allow features to display based on license, or learn about how to edit node names.

In this chapter:

- Customizing a Model
- Preferences Settings
- Showing More Options

Customizing a Model

A variety of tasks can be done to organize and simplify the model building process.

- Customizing the Desktop Layout
- Changing Fonts and the Desktop Language
- Editing Node Properties, Names, and Labels
- Custom Grouping of Nodes
- Grouping Nodes by Space Dimension and Type
- Setting the Unit System for Models
- Checking and Controlling Products and Licenses Used

	• Preferences Settings • The Application Libraries Window • Showing More Options • The COMSOL Desktop

Customizing the Desktop Layout

To customize the COMSOL Desktop environment, you can rearrange the windows by moving, resizing, detaching, or docking each window (see Adjusting Window Location and Size on the Desktop). Predefined layouts are also available and selected from the **Desktop Layout** menu where you can adjust to a widescreen or regular layout or reset it to the default.

	You can also adjust the fonts and the language. See Changing Fonts and the Desktop Language.

CHANGING AND RESETTING THE DESKTOP LAYOUT

The COMSOL Desktop layout can be set to widescreen or regular screen, or you can reset it to its default settings. Resetting can be useful after you have been moving or resizing the windows and want to quickly return to the default. The default settings are restored either for a widescreen layout or a regular screen layout depending on the monitor. Also see The COMSOL Desktop Menus and Toolbars.

From the **Reset Desktop** menu ( ) in the **Layout** section of the **Home** toolbar, or from the **Desktop Layout** submenu in the **Windows** menu in the cross-platform version, select one of the following:

- **Widescreen Layout**: suitable for widescreen monitors. The **Model Builder** window and the **Settings** window display side by side.
- **Regular Screen Layout**: suitable for monitors with a regular screen (4:3). The **Model Builder** window displays on top of the **Settings** window.

Win	To reset the desktop, click **Reset Desktop** ( ) in the **Layout** section of the **Home** toolbar.

Mac

Linux

To reset the desktop, select **Reset Desktop** or click the **Reset desktop** ( ) button in the main toolbar.

Changing Fonts and the Desktop Language

The COMSOL Multiphysics software uses a default font for texts in plots such as axis labels and titles. It might be necessary to use another default font to display non-Latin characters such as Chinese and Japanese characters. You can also change the Desktop language. You make these changes using The Preferences Dialog Box.

CHANGING THE FONT FOR PLOT LABELS AND TITLES

The **Default font** options are applicable for the text that displays for plots in the **Graphics** window. Changes to those settings are applied when you create a new model. In the **Preferences** dialog box, click **Graphics and Plot Windows**.

1 Under **Default font**, select a font **Family** from the list and enter a font **Size** (in points). The default is to use a predefined font family and the font size set to **Default size** in the **Size** list (to use the default system-dependent font size). Depending on the operating system and the installed fonts on the computer, you can select from a number of other font families. You can also choose another font size (6–24 pt) from the **Size** list.

2 Click **OK**. The program stores the specified font family and size as a preference setting, so you only have to change it once.

You can also change the setting used for an existing model from the root node's **Settings** window's **Font in Graphics** section. By default, it uses the font specified in the **Preferences** dialog box and the default font size.

- Plot Titles for Plot Groups and Plot Types
- The Root Settings and Properties Windows

CHANGING THE COMSOL DESKTOP LANGUAGE

1 In the **Preferences** dialog box, click **General**.

2 Select an available **Language** for the graphical user interface. The following languages are available: Simplified Chinese, Traditional Chinese, English, French, German, Italian, Japanese, Korean, and Spanish.

3 Click **OK**. A message displays indicating that the program must be restarted for the changes to take effect. Click **OK** again, exit and reopen the COMSOL Desktop to display the user interface in the selected language.

If you selected a language during the COMSOL installation, that language becomes the default language when you first start COMSOL Multiphysics.

Editing Node Properties, Names, and Labels

All nodes, except container nodes, have a common set of node properties, some of which can be changed and some system-generated properties that cannot be edited. The root node has additional information that provides an overview of the complete model file. The **Properties** window for the root node also includes a **Node Properties** section with additional information about the model file. The **Thumbnail** is set from the **Settings** window for the root node. See The Root Settings and Properties Windows for details about the root node.

EDITING A COMPONENT NAME FOR USE WITH VARIABLES

Use a component *Name* to access variables throughout the model. The name is part of the full reference to variables (for example, when referring to variables in another model component). To edit a component name, in the **Model Builder**, click a **Component** node. The **Settings** window for a **Component** node opens. Edit the default **Name** (`comp1`, `comp2`, and so on) as required in the **Name** field.

RENAMING A NODE LABEL

To rename a node in the **Model Builder** (except container nodes with fixed names such as under **Global Definitions**), right-click a node and select **Rename** ( ) or press F2. Enter a **New label** and click **OK**. The **Label** is both updated in the **Model Builder** and in the **Properties** window.

THE NODE PROPERTIES WINDOW

In the **Model Builder**, right-click a node (except "container nodes" such as **Materials**) and select **Properties** from the context menu. The **Properties** window for that specific node replaces the **Settings** window. The node properties vary by node type.

Node Properties

This section contains these fields:

- The **Label** field defaults to a system label for the node.
- The **Name** field defaults to a system name for the node.
- The **Tag** is a unique system-defined tag for the node, which cannot be changed and is mainly used when using the COMSOL API and the optional LiveLink™ *for* MATLAB®.
- The **Created** field is system generated and shows the node creation date and time.
- The **Author** field contains the name of the author (creator) of the node. In addition to editing the author name manually, you can make a change for all nodes that you add later on from The Preferences Dialog Box.
- The **Version** and **Comments** fields are empty by default. Enter version numbers or comments to track model changes or changes to specific node contents.

	• By default, if a node's settings are described in a report, the comments you enter in the **Comments** field are also included; see Node Properties for Reports. • For nodes with settings that can be described in reports, toolbars with buttons that let you control the formatting of the text appear above and below the **Comments** field; for details about these toolbar buttons and how to use them, see Text Formatting Tools.

Returning to the Settings Window

When you are finished editing the properties, right-click the node again and select **Settings** to return to the **Settings** window (or click another node and then click the node again).

	• The Root Settings and Properties Windows • Settings and Properties Windows for Feature Nodes • To learn about how some of these properties can be viewed, see Displaying Node Names, Tags, and Types in the Model Builder. • Variable Naming Convention and Namespace

Custom Grouping of Nodes

To achieve better overview and easier navigation of the model tree in the Model Builder window, you can create *group nodes* in the Model Builder by selecting and grouping other nodes. You can also create initially empty group nodes and then move other nodes into those group nodes. Group nodes can add organization to the model tree by grouping features that belong together, such as features that belong to a particular part of the geometry or are related to a particular aspect of the physics. You can drag the group nodes to reorder them or drag other nodes to or from the group nodes. Group nodes also make it easy to apply actions to all their members. Right-click a **Group** node (or use the corresponding keyboard shortcuts) and choose **Copy**, **Duplicate**, **Enable**, **Disable**, and **Delete** to make those commands act on the group and all its members. Group nodes under **Results** also make it possible to, for example, evaluate all derived values in a group by right-clicking the **Group** node and choose **Evaluate All**.

	The groups only change the view of the model but do not modify the model itself (with the exception that the order of features might be affected).

CREATING GROUP NODES

You can create group nodes using one of these methods:

- Select a set of nodes that are related and appear in the same part of the model tree. Right-click the selected nodes and choose **Group** from the context menu (or press Ctrl+G) to create a **Group** node. The selected nodes become children of the node group.
- Right-click a node (see below) that supports group nodes as subnodes and choose **Node Group** to create an empty **Group** node. You can then move applicable nodes to that node group.

There is only one setting in the **Settings** window for a **Group** node ( ). In the **Label** field, type a descriptive node label if desired, so that the label of the **Group** node describes its contents.

You can add node groups to the following parts of the model tree:

- Under **Global Definitions**: Parameters, Variables, Functions, Method Calls, Load and Constraint Groups, Geometry Parts, Mesh Parts, Materials, Extra Dimensions, and Reduced Models.
- Under each type's group node under **Global Definitions**: **Variables**, **Materials**, and so on.
- Under **Definitions** under a component.
- Under each type's group node under **Definitions**: **Variables**, **Functions**, and so on.
- Under **Materials** in a component.
- Under a physics interface.
- Under **Results**.
- Under each type's group node under **Results**: **Datasets**, **Tables**, and so on.

When you right-click a **Group** node, you can choose to add any applicable nodes as subnodes from the context menu.

UNGROUPING AND DELETING GROUP NODES

To ungroup nodes under a group node, right-click the **Group** node and choose **Ungroup**, or press Ctrl+Shift+G. Ungrouping removes the group and moves the subnodes in the group to the group's parent. If you instead right-click the **Group** node and choose **Delete**, or press Delete, the group node and all its subnodes are removed. If it is not possible to delete a subnode, it is then moved to the parent just like when you ungroup a group node.

MOVING NODES TO AND FROM GROUP NODES

You can drag and drop an applicable node into a group, or right-click the node and choose an applicable group node from the context menu's **Move To** submenu.

To move nodes out from a group node to the level above, you can drag and drop it or right-click it and choose **Move Out** ( ). You can also choose **Move Out** for a **Group** node that is placed under a type's node, such as **Variables**.

GROUP NODES AND GROUP BY TYPE AND BY SPACE DIMENSION

When activating **Group by Type** (see below), it will affect **Group** nodes in the following way:

- All applicable nodes that do not belong to a **Group** node will appear under a type node.
- The type nodes appear after the **Group** nodes in the model tree.
- **Group** nodes that contain only a single type of nodes become a child of the type node keeping the order of the features of that type.

The behavior is similar for grouping of physics features by space dimension in the physics interfaces.

Grouping Nodes by Space Dimension and Type

	The default setting, found under **Model Builder** in The Preferences Dialog Box section, disables grouping in new models.

The **Group by Space Dimension** (for physics interface nodes), **Group by Type** (for **Definitions** nodes), or **Ungroup** options are available from the context menu for these features:

- The **Global Definitions** node.
- The **Definitions** node under a **Component**.
- For any physics interface, nodes can be grouped by space dimension — that is, by geometric entity level: **Domains**, **Boundaries**, **Edges** (3D only), or **Points**.

	For physics interfaces, when either of these options is selected, the way the nodes are organized changes in the Model Builder and when you right-click to view the context menu.

GROUPING NODES BY SPACE DIMENSION

The default is **Ungroup** in the **Model Builder** for all new models. Right-click and select **Group by Space Dimension** ( ) from the context menu to group the nodes in both the Model Builder and the context menu (see Figure 4-1).

In Figure 4-1 for the **Electric Currents** interface and when **Group by Space Dimension** is selected, the default **Current Conservation** and **Initial Values** subnodes are included under the **Domains** node, and two boundary level nodes are included under **Boundaries**. However, there are no nodes under **Edges** or **Points** even though these nodes display in the **Model Builder**.

When **Ungroup** ( ) is selected from the context menu (or the default is kept), the tree is flattened and all nodes are ungrouped. Only default physics interface nodes and user-added nodes are included in the **Model Builder** sequence.

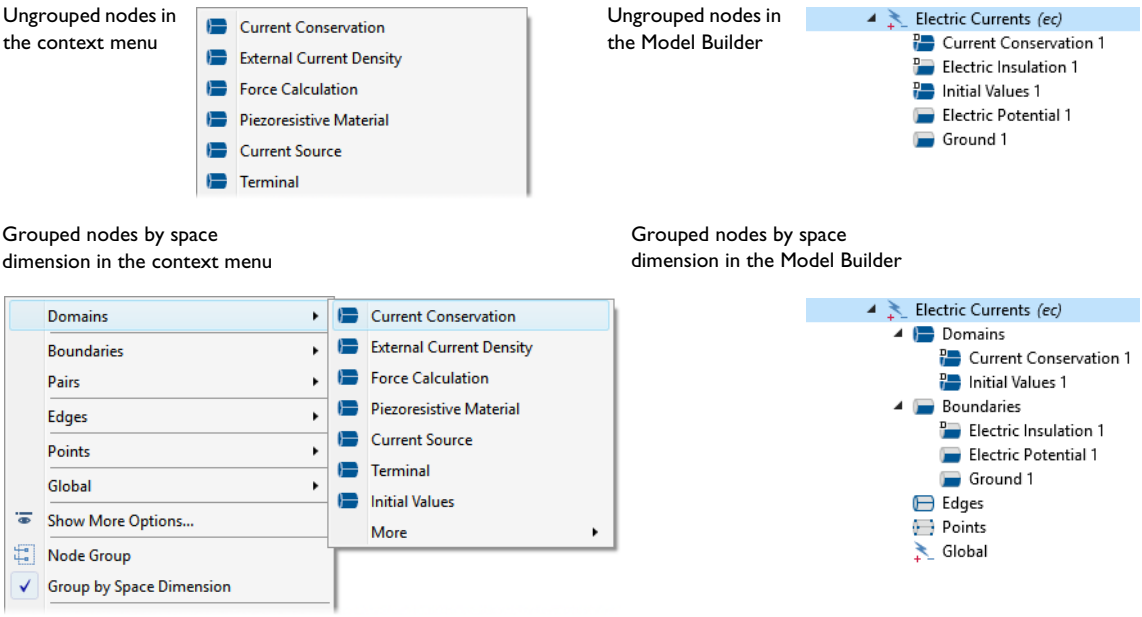

Figure 4-1: The context menu and Model Builder sequence for physics nodes when Group by Space Dimension or Ungroup is selected. For the Global Definitions and Definitions nodes, the same principles apply but the nodes are grouped by type instead.

GROUPING NODES BY TYPE

The same principles apply for the two kinds of **Definitions** nodes as for the physics nodes, except the nodes are grouped by type.

The default is that the nodes are not grouped in the **Model Builder** for all new models. Right-click and select **Group by Type** from the context menu to both group the nodes in the Model Builder and in the context menu. When there is no grouping, only the default **Definitions** or **Global Definitions** nodes and user-added nodes are included in the **Model Builder** sequence as in Figure 4-2.

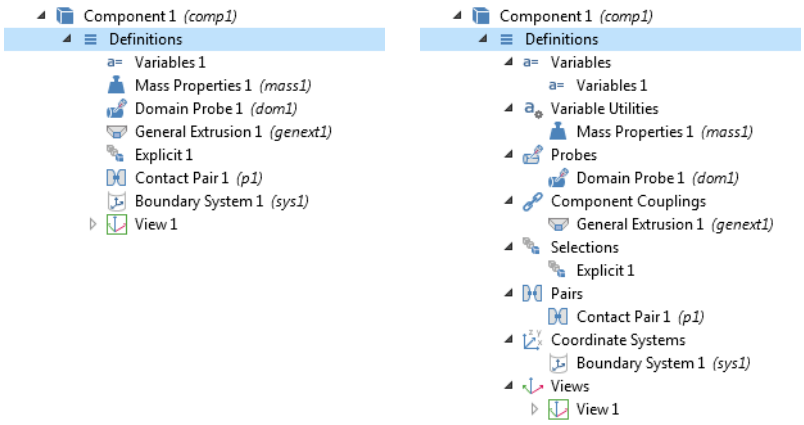

Figure 4-2: Group by Type is not selected (left) and selected (right) from the context menu for the Definitions node.

- Opening Context Menus and Adding Nodes
- The Physics Nodes
- The Physics Interfaces
- Building a COMSOL Multiphysics Model

Setting the Unit System for Models

SETTING THE UNIT SYSTEM ON THE GLOBAL LEVEL

To set the unit system for the entire MPH-file on a global level:

1 In the **Model Builder**, click the root node (the top node in the model tree). The root node's name is the name of the MPH-file or **Untitled.mph** before you have saved your work.

2 In the root node's **Settings** window, select the unit system from the list in the **Unit System** section or **None** to turn off unit support.

SETTING THE UNIT SYSTEM FOR INDIVIDUAL MODEL COMPONENTS

By default, all components in a model use the same global unit system, but it is possible to use different unit systems in each component. To do so, follow these steps:

1 In the **Model Builder**, click the top node for a **Component** branch (**Component 1**, for example).

2 In the **Settings** window for a **Component** node locate the **Component Settings** section.

3 Select the **Override global system** check box, and then select the unit system from the list of unit systems that becomes available.

!	To make the results of a model independent of the unit system, make sure to define all material properties and other model settings using unit syntax so that all values are interpreted using the intended units. If you switch from a metric unit system, using kelvin as the temperature unit, to a unit system using degrees Fahrenheit as the temperature, or vice versa, the model results are typically not identical because of the offset involved in the conversion of temperature values.

	To disable unit support in a model, choose **None** from the list in the **Unit System** section in the root node's **Settings** window and make sure that the corresponding setting for each component is **Same as global system**. If unit support is turned off only for some components (or if the settings at global and component level differ for a model with a single component) unexpected side effects can occur.

	• Using Units • The Root Settings and Properties Windows

Checking and Controlling Products and Licenses Used

Open the **Licensed and Used Products in Session** dialog box to view a list of licenses or to block the use of a product. Blocking a license can be useful for consultants who want to duplicate a client's environment while building a model or when collaborating with other users who do not have access to the same set of COMSOL products. You can also use these settings to prevent the use of a module when sharing a floating-network license, for example. It is possible to open and postprocess models that include functionality that you have blocked or that your license does not include. Nodes with functionality that requires a license for a product that is blocked or not available get a **License Error** subnode ( ), where you find information about the missing but required product license. Unless you disable or remove such nodes, it is not possible to re-solve such models.

To open the **Licensed and Used Products in Session** dialog box:

- From the **File** menu, select **Licensed and Used Products** ( ) (Windows users). You can also customize the Quick Access Toolbar and then click the button. See Windows Toolbars and Menus.
- From the main menu, select **Options>Licensed and Used Products** ( ) (macOS and Linux users).

By default, the use of all products is active and the check boxes for all products are selected. The licenses in use are unavailable (you cannot block the use of products with functionality already in use). The main COMSOL Multiphysics product is always in use and therefore has no check box. By default, product licenses that are in use are checked out and unavailable until you start a new model or application by choosing **New** from the **File** menu, for example. To make product licenses that are checked out unavailable during the entire COMSOL Multiphysics session (until you restart COMSOL Multiphysics and unless an idle timeout causes the checked out licenses to be returned to the license server when COMSOL Multiphysics has been idle for some time), select the **Keep checked out licenses when creating or opening applications** check box.

Click to clear the check box next to a product to hide or block it from use. Click **Select All** to activate all products. Click **Deselect All** to block all products (except the ones that are already in use). Click **OK** to save the changes or **Cancel** to discard any changes and close the window.

PRODUCT INFORMATION

Click the **Product Information** button to go to the product information pages on the COMSOL website, where you find information about all COMSOL products.

	You can also get information about the licensed products from The About COMSOL Multiphysics Box.

BORROW A LICENSE

If you have a floating network license (FNL) or a class kit license (CKL) and your license file has been enabled for borrowing, click **Borrow** to open the **Borrow Licenses** dialog box and borrow licenses from the license server. Select the licenses you want to borrow from the list and specify the number of days you want to keep them. Click **OK** to save.

	Remember that other users cannot use the licenses that you have checked out. If you try to borrow a license that has already been borrowed, you receive an error message that shows for which products the license has been borrowed.

Preferences Settings

The Preferences Dialog Box

To make changes to how items are displayed throughout COMSOL edit the following settings in the **Preferences** dialog box as needed.

To open the **Preferences** dialog box:

- Windows users: From the **File** menu, select **Preferences** ( ) You can also customize the Quick Access Toolbar and then click the button. See Windows Toolbars and Menus.
- Cross-platform (macOS and Linux) users: From the main menu select **Options>Preferences** ( ).

!	For some settings changes, a message window displays to tell you that COMSOL Multiphysics needs to be restarted for the changes to take effect. For each preference **Settings** window, you can click the **Factory Settings** button to restore the factory default values, or click **Factory Settings for All** to reset all the preferences to the factory default.

The preferences are saved when you close the **Preferences** dialog box and when you exit COMSOL Desktop.

As shown in Figure 4-3, the following are available in the **Preferences** dialog box:

- Application Builder
- Application Libraries
- Client Server
- Email
- Files
- Forms
- General
- Geometry
- Graphics and Plot Windows
- Help
- LiveLink Connections
- Methods
- Model Builder
- Multicore and Cluster Computing
- Parametric Sweep
- Part Libraries
- Physics Builder
- Quick Access Toolbar
- Remote Computing
- Results
- Security
- Updates

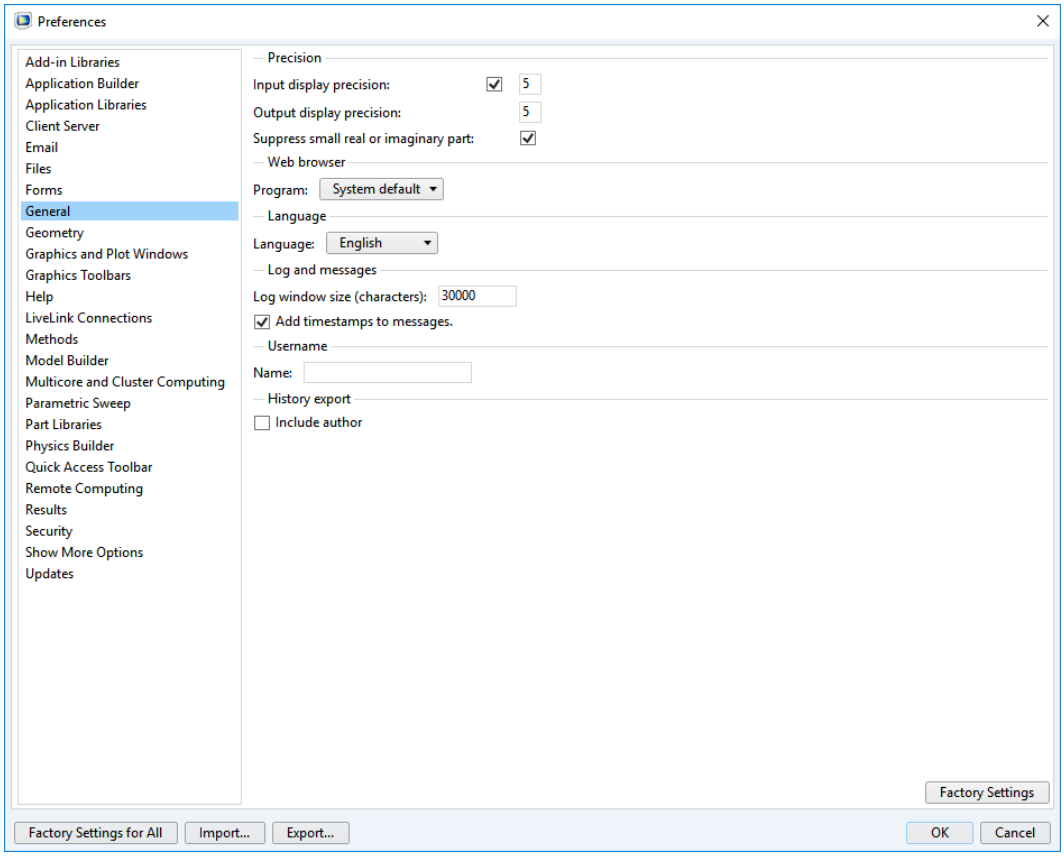

Figure 4-3: The Preferences dialog box.

Importing and Exporting Preferences

You can import and export the preference settings as COMSOL preference files (`*.prefs`). In the **Preferences** dialog box, click **Import** at the bottom of the dialog box to choose a COMSOL preference file to import from the file chooser window that opens. Then click **Open** to import and use the preferences from the chosen file. Click **Export** at the bottom of the dialog box to choose a COMSOL preference file to export the preference to from the file chooser window that opens. Then click **Save** to save the preferences in the specified file.

By default, most preference settings are migrated from the previous COMSOL Multiphysics version the first time that you start an instance of a new version of COMSOL Multiphysics. See Preference Migration for more information.

Showing More Options

To display the functionality described in this section, click the **Show More Options** button ( ) on the **Model Builder** toolbar. Then, in the **Show More Options** dialog box, select the applicable option:

- Under **Physics** ( ): **Equation Sections**, **Equation View**, **Stabilization**, **Equation-Based Contributions**, **Extra Dimensions**, and **Advanced Physics Options**.
- Under **Study** ( ): **Batch** or **Batch and Cluster**, **Sensitivity**, **Multigrid Level**, **Reduced-Order Modeling**, and **Solver and Job Configurations**.
- Under **Results** ( ): **Views**.
- Under **General** ( ): **Override and Contribution** and **Variable Utilities**.

Each of these options are described in this section.

In the **Show More Options** dialog box, click the options that you want to include. At the bottom of the dialog box, click the **Select All** button ( ) to select all options, or click the **Reset to Default** button ( ) to restore the default settings (where only the **Equation Sections** option is selected). Click **OK** to accept the selected options and close the dialog box.

You can also open the **Show More Options** dialog box from the context menu for the **Global Definitions**, **Definitions**, **Materials**, physics interface, **Study**, and **Results** nodes.

EQUATION SECTIONS

By default all **Equation** sections, which show mathematical equations describing a physics node, appear on all physics nodes' **Settings** windows. Clear this check box if you do not want to include the **Equation** sections.

EQUATION VIEW

Select this option to display the **Equation View** node under all physics nodes in the **Model Builder**.

	• Common Physics Interface and Feature Settings and Nodes • Equation View • Physics Nodes — Equation Section

STABILIZATION

Select this option to display the **Consistent Stabilization** and **Inconsistent Stabilization** sections on the **Settings** windows. If you have access to the Level Set and Mixture Model interfaces, it displays a **Stabilization** section instead.

	For detailed information about this feature, see Numerical Stabilization and Numerical Stability — Stabilization Techniques for Fluid Flow.

EQUATION-BASED CONTRIBUTIONS

Select this option to get access to equation-based contributions in physics interfaces, such as weak contributions, global equations, and pointwise, weak, and global constraints, which you can add to modify and extend a physics interface:

- **Weak Contribution.** See Weak Contribution (PDEs and Physics) and Weak Contribution (ODEs and DAEs).
- Weak Constraint
- Pointwise Constraint

- **Weak Contribution on Mesh Boundaries.** This feature is similar to Weak Contribution but is active on mesh boundaries. See Weak Contribution (PDEs and Physics) and Weak Contribution (ODEs and DAEs).
- Global Equations**.** Also see Adding ODEs, DAEs, and Other Global Equations.
- Global Constraint. Also see Symmetric and Nonsymmetric Constraints and Constraint.
- **Weak Contribution**. See Weak Contribution (PDEs and Physics) and Weak Contribution (ODEs and DAEs).

EXTRA DIMENSIONS

Select this option to get access to options for adding extra dimensions under **Global Definitions** in the model tree. Extra dimensions can be used to extend a standard geometry with additional spatial dimensions.

ADVANCED PHYSICS OPTIONS

Select **Advanced Physics Options** for a variety of settings for advanced physics options to take effect.

Advanced Settings

The **Advanced** section appears on some physics feature nodes' **Settings** windows. This section does not normally appear unless the physics interface contains some advanced options.

Constraint Settings

This section controls how constraints are enforced, usually in boundary conditions. See Constraint Settings for more information.

Additional Advanced Physics Options

There are additional settings, specific to some physics interfaces, that are also activated by the **Advanced Physics Options** check box. Also, the **ISO preferred frequencies** option, which appears in the **Range** dialog box, is controlled by this option.

BATCH, OR BATCH AND CLUSTER

Uses a batch process to solve a study on your computer as a batch job. If your license includes cluster computing, the cluster computing submits the batch jobs to a job scheduler which can run the jobs on a second computer or a cluster. If you select this option, you can right-click the **Study** node to enable Cluster Computing, **Cluster Sweep**, **Batch Sweep**, and Batch.

SENSITIVITY

Sensitivity analysis can add sensitivity functions at the study level and use model parameters as global control variables. Select this option to add a Sensitivity study step.

MULTIGRID LEVEL

Select this option to make it possible to add and define multigrid levels for multigrid solvers or preconditioners. Right-click applicable study step nodes to enable the Multigrid Level option from the context menu.

REDUCED-ORDER MODELING

Reduced models are online reduced-order representations of a full COMSOL Multiphysics model. Select this option to enable access to reduced-order modeling tools on the **Reduced-Order Modeling** menu under **Global Definitions** and the **Model Reduction** study step under a **Study**.

SOLVER AND JOB CONFIGURATIONS

Select this option to enable these options under the **Study** nodes: Job Configurations and Solver Configurations. These nodes also appear if they contain content. Right-click the **Solver Configurations** node to be able to select the option Create Custom Solver and add a **Solver** node without any added solver settings or other nodes.

VIEWS

Select this option to display the **Views** node under **Results** and make it possible to define additional views used during postprocessing.

	• User-Defined Views • Results Analysis and Plots

OVERRIDE AND CONTRIBUTION

Select the **Override and Contribution** check box to include the section in all physics nodes (for material models, sources, boundary conditions, and so on) and also in, for example, materials nodes under **Materials** and moving mesh nodes under **Definitions**. For a specific node, the **Override and Contribution** section in its **Settings** window contains lists of other nodes that the node is overridden by, other nodes that the node overrides, and other nodes that contributes with the node (to the total load or flux, for example).

	• Physics Exclusive and Contributing Node Types • Listing Overrides and Contributions • Overridden Selections

VARIABLE UTILITIES

Select this option to make it possible to add utilities for matrix variables, state variables, mass properties, and more from the **Variable Utilities** menus that you access by right-clicking a **Global Definitions** or **Definitions** node..

	• Matrices and Matrix Operations • Mass Properties

5

Global and Local Definitions

This chapter describes the available functionality in the Global and Component Definitions branches such as parameters, variables, functions, operators, coordinate systems, contact pairs, probes, and infinite elements and PMLs.

In this chapter:

- Global Definitions, Geometry, Mesh, and Materials
- Definitions
- Operators, Functions, and Constants
- Predefined and Built-In Variables
- Mass Properties
- Functions
- Matrices and Matrix Operations
- Nonlocal Couplings and Coupling Operators
- Coordinate Systems
- Identity and Contact Pairs
- Probes
- Infinite Elements, Perfectly Matched Layers, and Absorbing Layers
- Reduced-Order Modeling

Global Definitions, Geometry, Mesh, and Materials

Depending on the geometric scope, there are different nodes that can be defined in the Model Builder under the top-level **Global Definitions** ( ) node. See Global Definitions below for a list of available global definitions. The section for local Component Definitions has all the information about the available features for local definitions.

Global Definitions

Under **Global Definitions** ( ) you add features that apply to the entire model. Add the following features by right-clicking **Global Definitions** and choosing an option from the context menu. You can also access the most widely used functionality using the toolbars (the **Home** toolbar for Windows users and the **Main** toolbar for macOS and Linux users).

- Parameters (P_i): User-defined global, scalar values that are used to parameterize any part of the model.
- Variables (a=): User-defined variables that can be used anywhere to simplify the specifications of some properties.
- Variable Utilities ( ). Matrices and matrix operations such as matrix inverse and diagonalization; also expression operators and global state variables.
- **Thermodynamics** ( ). This branch contains functionality for thermodynamic calculations. See the documentation for the Chemical Reaction Engineering Module for more information.
- Functions (f(x)): Function templates for creating user-defined functions based on analytic expressions or imported data, or specifying parameters for common function types such as step functions, ramps, and random functions.
- **Groups** ( ): Add **Load Group** ( ) and **Constraint Group** ( ) nodes for use in load cases. See Using Load Cases.
- Geometry Parts ( ). Geometry parts for use in 1D, 2D, and 3D model components.
- Mesh Parts ( ). Mesh parts for use in 1D, 2D, and 3D model components.
- Global Materials ( ). For adding materials, layered materials, and material switches at the global level.
- Reduced-Order Modeling ( ). For adding Global Reduced Model Inputs nodes defining potential inputs to Reduced Model nodes, for choosing **Reduced Models Import** ( ) to import a COMSOL Reduced Model file (*.mphrom), and for adding Random Vibration nodes.
- Default Model Inputs ( ). For modifying the values of default model input properties.
- Add-ins, method calls, and settings forms created using the Application Builder and accessed from the Developer toolbar. See Modeling Development Tools.

Geometry Parts

The **Geometry Parts** ( ) branch under **Global Definitions** has features to create a geometry **Part** in 3D ( ), 2D ( ), and 1D ( ). You can add these geometry parts as part instances in a geometry sequences in a Component. The **Geometry Parts** node appears when you add a geometry part by right-clicking the **Global Definitions** node and choosing a part from the **Geometry Parts** submenu.

A geometry part can be called (several times) from geometry sequences. You can use geometry parts to make custom parameterized geometric primitives. When calling a part, the input to the part is numerical values of its arguments. The output from the part is a number of geometry objects and a number of selections on these objects.

The part node behaves like a geometry sequence with a few minor differences as described in the Using Geometry Parts section. You can also link a part from a Model MPH-file.

	See also Creating a Geometry Sequence in the Geometry Modeling and CAD Tools chapter, which also explains The Geometry Node and the geometry features.

Mesh Parts

The **Mesh Parts** ( ) branch under **Global Definitions** has features to create a **Mesh Part** in 3D ( ), 2D ( ), and 1D ( ). The **Mesh Parts** node appear when you add a mesh part by right-clicking the **Global Definitions** node and choosing a mesh part from the **Mesh Parts** submenu.

A mesh part contains an imported mesh or meshing sequence and possibly additional meshing operations such as partitions. You can use a mesh part in a geometry sequences by referencing it in an **Import** node. Also, when importing a mesh using an **Import** node in a geometry sequence, a **Mesh Part** node is created.

	See Using Mesh Parts for more information about mesh parts. Also see Adding, Editing, and Building Meshing Sequences for general information about meshing sequences.

Global Materials

The **Materials** ( ) branch under **Global Definitions** enables you to add materials at the global level. You can add materials in the same way as you do under a **Component** branch, but materials on the global level are available throughout the model and therefore have no **Geometric Entity Selection** section. You can refer to global materials using a **Material Link** node under the **Materials** branch in a component. Using global materials can be useful if you want to use the same materials in several components within a model.

MATERIAL OVERVIEW

This section provides an overview of the materials added under the global **Materials** node. To access global materials in a model component, use a Material Link.

The **Material** column lists the current materials using the materials' node labels from the model tree according to the settings defined in Displaying Node Names, Tags, and Types in the Model Builder.

The **Selection** column for global materials always shows **Global** to indicate the global scope for the materials defined here.

	Materials

Definitions

Just as the Global Definitions branch ( ) collects user-defined parameters, variables, and functions accessible at all levels in the Model Builder, the *Definitions* branch ( ) under each Component collects the definitions of variables, functions, and other objects where the geometric scope is restricted to a single component.

Definitions are under the Component branch because several model components can separately be defined in one multiphysics file, for example, when treating certain parts of the whole model in 2D and other parts in 3D. Definitions which in some way refer to domains in a geometry, the geometry's dimension or its coordinate names must therefore be held apart in different Component branches.

An example of the type of objects you can add under the Definitions branch is a *Selection* node ( ), which saves selections of geometric entities (boundaries, for example) that relate to a region or part of the overall geometry for reuse in operations later in the modeling process.

Add a **Component** node to the Model Builder, then add definitions with a local scope that apply to that specific model Component. Click or select features either using the **Definitions** toolbar or right-click **Definitions** ( ) and choose an option from the context menu:

Select among the following definition types:

- Variables (a=): Add user-defined variables to simplify the expressions of other variables and properties.
- Variable Utilities ( ). Add nodes that manipulate vectors and matrices, define parameterized expressions, or set up various special variables, for example participation factors and Mass Properties, for use in modeling or postprocessing.
- **View**: Create a user-defined view to visualize the model. See User-Defined Views in the Visualization and Selection Tools chapter.
- Functions (f(x)): Add user-defined functions based on analytic expressions or imported data, or specifying parameters for common function types such as step functions, ramps, and random functions.
- Probes ( ): Add a probe to monitor the development of a scalar-valued quantity (real or complex-valued number) during a dynamic simulation.
- Nonlocal Couplings and Coupling Operators ( ): Add nonlocal couplings inside or between Components, in the form of integration, mapping, projection and similar user-defined operators.
- **Selections** ( ): Create a user-defined set of geometric entities for reuse throughout the model component. See Creating Named Selections in the Visualization and Selection Tools chapter.
- **Pairs**: Pairs are only available and necessary when the model geometry is an assembly. See Identity and Contact Pairs. There are two types of pairs:
  - **Contact Pair** ( ), which specifies two sets of boundaries that can come in contact under deformation. The contact pairs are only available if your license includes the Structural Mechanics Module or the MEMS Module.
  - **Identity Boundary Pair** ( ), which specifies two boundary selections (also available for edges and points as **Identity Edge Pair** ( ) and **Identity Point Pair** ( ), respectively) that coincide while belonging to different parts of an assembly. Special boundary conditions connect the physics features in the two parts.
- Coordinate Systems ( ): Create coordinate systems for use in the physics interfaces.
- **Extra Dimensions**: Attach extra dimensions to a selection in the base geometry of a model. See Using Extra Dimensions for more information.
- Moving Mesh Features ( ). Add moving mesh functionality to model moving meshes in a COMSOL Multiphysics model.

- Deformed Geometry Features ( ). Add deformed geometry functionality to model deformed geometries in a COMSOL Multiphysics model.
- **Topology Optimization** ( ). Add **Density Model** ( ), **Fixed Topology Domain** ( ), and **Fixed Topology Boundary** ( ) nodes for setting up a topology optimization. This functionality requires the Optimization Module. See the *Optimization Module User's Guide* for more information.
- **Shape Optimization** ( ). Add **Free Shape Domain** ( ), **Polynomial Boundary** ( ), **Free Shape Boundary** ( ), **Free Shape Shell** ( ), **Symmetry/Roller** ( ), and **Fixed Point** ( ) nodes for setting up a shape optimization. This functionality requires the Optimization Module. See the *Optimization Module User's Guide* for more information.
- **Perfectly Matched Layer (PML)** ( ), **Infinite Element Domain**( ), or **Absorbing Layer** ( ): Surround your model by a perfectly matched layer, an infinite element domain, or an absorbing layer, behaving as an unbounded extension of the modeling domain. See Infinite Elements, Perfectly Matched Layers, and Absorbing Layers.
- **Ambient Properties** ( ). For specifying ambient properties in simulations as user-defined properties or from meteorological data (the meteorological data requires the Heat Transfer Module or the Subsurface Flow Module). See Ambient Properties in the *Heat Transfer Module User's Guide* for more information.
- **Model Input**. For specifying a value for a model input locally, overriding its global value from the Default Model Inputs node. See Model Input.

About Parameters, Variables, Variable Utilities, and Expressions

PARAMETERS AND VARIABLES

Parameters and *variables* are used to parameterize and organize your model. These are available for the Global Definitions node. Variables are also available in each model component.

Parameters

Parameters are user-defined constant scalars with a global scope that are available for use throughout the Model Builder tree. In particular, they can be used for parameterization in the Geometry, Mesh, and Study branches. Important uses include:

- Parameterizing geometric dimensions
- Parameterizing mesh element sizes
- Defining parametric sweeps

A *parameter expression* can contain: numbers, other parameters, mathematical constants, physical constants, user-defined functions, functions of parameter expressions, unary operators, and binary operators. Parameters can have units. For example, a parameter can be defined as `(exp(-pi*i)+a)*c_const`, where `a` is another parameter, but it is often a scalar numerical value for use in a parametric sweep, where that value is updated during the sweep.

Variables

A *variable*'s expression can contain numbers, parameters, mathematical constants, physical constants, other variables, functions of variable expressions, spatial variables, time, unary operators, and binary operators. Variables can also depend on dependent variables (the solution) and their derivatives, and they can have units. For example, a variable can be defined as `pi*(R_tube^2-r_tube^2)`, where `R_tube` and `r_tube` are two other variables or parameters (for example, defined as `10[mm]` and `25[mm]`, respectively). Variables must be defined so that they return a scalar value when evaluated; that is, the expression defining a variable can be a scalar-valued function such as `2*pi*x*y` (in a 2D model), which evaluates to a scalar value for each call with a value of `x` and `y`.

	Variables cannot be used in the Geometry and Mesh branches, and only to a limited amount in the Study branch.

Variables can have global or local scope depending on where they are defined. A variable with local scope is limited to a geometric entity level within a model component: the entire component's geometry or selected domains, boundaries, edges (3D only), or points.

	A variable cannot necessarily be evaluated in its entire domain of definition since its defining expression may make use of variables defined in a more limited scope. For example, you can use variables with domain scope in the definition of a global variable. The global variable will then formally exist in the global scope but can only be evaluated in the domains where its defining expression is valid.

Variables can make a model easier to understand by introducing short and descriptive names for complicated expressions or to use a single variable for a quantity that is defined differently in some model domains. Most variables for material properties, coordinates, and other quantities defined on the computational domain are "field variables" — that is, they are defined so that they can vary in space and time and return a scalar value for each set of input values. For example, a built-in variable for the density in a Solid Mechanics interface, `solid.rho`, represents a density ρ as $\rho(x, y, z, t)$ in 3D. You can visualize it in a surface or volume plot, for example, but you cannot use it in an ODE or a global evaluation, even if it should happen to be defined as a constant value. In such a situation, use a nonlocal coupling that computes an average quantity or a point probe to obtain a scalar quantity with a global evaluation scope.

NAMING CONVENTIONS, RESERVED NAMES, AND ERRORS

Parameter names and variable names are case sensitive and must begin with a lowercase or uppercase letter (a–z or A–Z). All other characters in the name must be a lowercase or uppercase letter, a number 0–9, or an underscore (_). Dots (.) are also allowed in names but have a special meaning as delimiters in the namespace. Therefore, specifying a variable name using a dot may lead to unexpected behavior. It is possible that the first part of a variable name containing a dot is misinterpreted as a dot symbol for accessing a variable in a namespace.

It is good practice to use descriptive names that are different from the names of built-in functions and constants. Some fundamental built-in mathematical and numerical constants and built-in variables have reserved names; defining a variable using a reserved name is not recommended because it can cause unexpected results. If you use a variable name that is a reserved name (see Summary of Built-In Variables With Reserved Names), the name appears in orange and if you move the cursor to the name, a tooltip such as **j is a reserved name** appears. The following names are reserved: `eps`, `nan`, `NaN`, `inf`, `Inf`, `i`, `j`, and `pi`. Also, when used in a model, errors about duplicate variable names occur if you defined parameter names using names of built-in variables for the geometry, mesh, and physics (`h`, `dom`, and similar names of built-in variables as well as the names of dependent variables and spatial coordinates in the model).

If the expression contains a syntax error, it appears in red. Syntax errors can be due to illegal characters, mismatched parentheses, and other syntactic errors. The **Error** node ( ), which occurs when trying to solve a model with a syntax error, typically contains information about the position and expression where the syntax error is located.

Parameters

Parameters nodes (P_i) are available under **Global Definitions** for creating and defining global parameters. One **Parameter** node is always available, and it cannot be moved or deleted. Additional **Parameter** nodes can be added as desired, if you would like to group parameters in several **Parameter** nodes, perhaps with descriptive labels. This is also useful if you want to use some parameters for preprocessing only and then not include them in parametric sweeps for example (see the **Visibility** section below). You can move and delete **Parameter** nodes that you have added. If you group nodes by type, the **Parameters** nodes appear under **Global Definitions>Parameters**. Right-click a

Parameters Node and choose **Parameter Case** to add **Case** subnodes for parameter cases, which can be useful for parameter switching in a Parametric Sweep node (see Parameter Cases).

	The parameter namespace is global, so you cannot use the same parameter name in different **Parameter** nodes. If you do, the parameter name turns red and a **Name already used** tooltip appears.

You can also add a **Parameters** node ( ) under **Results** ( ) for parameters that you want to use for results analysis and postprocessing without the need to update the solution.

Parameters are useful in the following context:

- As parameters in dimensions for geometric primitives or other geometry operations
- As parameters for the mesh generators to, for example, specify the mesh size
- As parameters to control some aspects of the solution process
- To quickly evaluate a mathematical expression, including unit conversion
- In physics interface and feature settings, expressions, and coupling operators
- In expressions when evaluating results

The **Settings** window for **Parameters** includes the following sections.

PARAMETERS

Enter values in the **Parameters** table to define parameters used throughout the entire model (or in nodes under **Results** only). In the **Parameters** section you can enter parameters manually or import them from a text file.

- In the **Parameters** table or the field under the table, enter a parameter **Name**.
- In the **Expression** column or field, enter a parameter expression that defines the parameter value, including a unit if desired. You can define a parameter as an expression in terms of numbers, other parameters defined in the same context (and global parameters in the **Parameters** node under **Results**), built-in constants, built-in functions of parameters, built-in constants, and user-defined functions (to access user-defined functions defined under a component use a component scope; that is prefix them with the component's name, such as `comp1.an1(fpar)`). Also add a unit using unit syntax, unless the parameter is unitless. Press Ctrl+Space or use the **Insert Expression** button ( ) below the table to choose from previously defined parameters, mathematical constants and functions, operators, and physical constants that you can insert into the expression at the position of the cursor.
- The **Value** column displays the value of the parameter in the base unit system.
- In the **Description** column or field, enter an optional description.

You can select one or more parameters and right-click to move them inside this table or to another existing or new **Parameters** node (by choosing **Move>Move to Parameters 2**, for example, or **Move>Move to New Parameters**), delete the parameters, or cut, copy, and paste the expressions. If there are **Case** subnodes (see Parameter Cases) added as parameter cases, you can also choose from which **Case** node the parameter values are taken (using the **Set From** submenu).

You can also use the buttons underneath the table to move and remove rows and to clear the table. Also, use the **Move To** button ( ) to move selected parameters to any other available **Parameters** node or to a new **Parameters** node. If there are **Case** subnodes, use the **Set From** button ( ) to pick the parameter values from one of the parameter cases.

Additionally, you can save the parameters to a text file to reuse in other models. Click the **Save to File** button ( ) and enter a **File name** in the **Save to File** dialog box, including the extension .txt. Click **Save** to store the parameters in a text file or in a Microsoft Excel Workbook spreadsheet if the license includes LiveLink™ *for* Excel®. The information is saved in space-separated columns in the same order as displayed on screen. When saving to Excel, an

Excel Save dialog box appears where you can specify the sheet and range and whether to overwrite existing data, include a header, use a separate column for units, or include the calculated values for the parameters.

You can import or load data in files from a spreadsheet program, for example, with the **Load from File** button ( ) and the **Load from File** dialog box that appears. Data must be separated by spaces or tabs. If there is already data in the table, imported parameters are added after the last row. Move or edit rows as needed. If the license includes LiveLink™ *for* Excel® you can also load parameters from a Microsoft Excel® Workbook spreadsheet. Then an **Excel Load** dialog box appears where you can specify the sheet and range and whether to overwrite existing data. It is also possible to import from a spreadsheet containing a separate column for units.

VISIBILITY

The **Show in parameter selections** check box is selected by default. Clear it if the parameters in this **Parameters** node should not be available for selections in, for example, a **Parametric Sweep** node's **Settings** window.

	This section is not available for the **Parameters** node under **Results**.

Parameter Cases

You can right-click a **Parameters** node and choose **Parameter Case** to add one or more **Case** ( ) subnodes. The **Case** nodes' **Settings** window contains a **Parameters** section with the same parameter names as the parameters in the **Parameters** node to which they belong. You can only change the **Expression** column to use a different parameter value in each parameter case. Parameter cases are useful for using different set of parameter values without having to load the parameter values from a set of files. When you have defined multiple parameter cases using **Case** nodes, you can select from which case to set the parameter values in the main **Parameters** node. You also use parameter cases for parameter switching using a Parametric Sweep node.

Variables

You can add **Variables** ( ) from either the **Global Definitions** node or the **Definitions** node under the **Component** (local) nodes.

- From the **Home** (Windows users) or **Main** (macOS and Linux users) toolbar click **Variables** and choose **Global Variables** or **Local Variables**.
- Right-click **Global Definitions** and choose **Variables**.
- Under **Component** right-click **Definitions** and choose **Variables**, or click **Local Variables** in the **Definitions** toolbar (Windows users).

Use the **Variables** node to define expressions as user-defined *variables*. Global variables can be used in any context that accepts variable expressions, in all Components and on all geometric entities — provided that their expressions are also global expressions. In contrast, local variables have a specific geometric domain of definition. Such variables can only be used and evaluated in a specific Component, or on selected domains, boundaries, edges, or points.

Global variables are primarily useful for expressions involving parameters that do not depend on the geometry, such as time, or dependent variables in an ODE or algebraic equation. Whenever possible, define variables under **Definitions** in a Component to minimize the risk of variable name conflicts in the global namespace.

Which variables are available for evaluation in postprocessing is decided at the time a solution is created. This means that variables you define do not immediately show up as predefined quantities in results nodes or become available for use in expressions when postprocessing an existing solution. To access the new variables, you must solve the model or update an existing solution by right-clicking a **Study** node ( ) and selecting **Update Solution** ( ).

GEOMETRIC ENTITY SELECTION (LOCAL DEFINITIONS ONLY)

Select the geometric scope from the **Geometric entity level** list: **Entire model**, **Domain**, **Boundary**, **Edge** (3D only), or **Point**. For all levels except **Entire model**, you must also specify the variables domain of definition either by adding entities to a **Manual** selection or choosing **All boundaries**, for example, from the **Selection** list.

	Variables defined in a Component but with **Geometric entity level** set to **Entire model** are in fact global; they can be used anywhere using their full name. For example, if you define variable `a` in Component 1 in this way, you can refer to it in another Component as `comp1.a`.

	If a variable is defined on the boundary (with the same name as a variable defined in a domain), it will take precedence, when evaluated on a boundary, over the variable in the domain. If you define a variable `v`, for example, and the selection is **Entire model**, you actually define four different variables, representing `v` in domains, boundaries, edges (3D only), and points.

VARIABLES

In the **Variables** table or the fields under the table, enter variables by defining a variable name under **Name**, an expression that define the variable under **Expression** (see About Parameters, Variables, Variable Utilities, and Expressions), and (optionally) a description that explains the variable under **Descriptions**. Alternately, you can import variable definitions from a text file. For the expression, press Ctrl+Space or use the **Insert Expression** button ( ) below the table to choose from a number of applicable variables, parameters, functions, operators, and constants that you can insert into the expression at the position of the cursor. Use other buttons underneath the table to move and remove rows and to clear the table. Also, use the **Move To** button ( ) to move selected variables to any other available **Variables** node or to a new **Variables** node.

	It is only possible to move variables within **Variable** nodes in the same component or between global **Variables** nodes.

Additionally, the **Save to File** button ( ) saves variables to a text file (or to a Microsoft Excel Workbook spreadsheet if the license includes LiveLink™ *for* Excel®) for reuse in other models. The information is saved in space-separated columns in the same order as displayed on screen. When saving to Excel, an **Excel Save** dialog box appears where you can specify the sheet and range and whether to overwrite existing data, include a header, or use a separate column for units.

Using the **Load from File** button ( ), you can import or load data in text files created, for example, by a spreadsheet program. Data must be separated by spaces or tabs. If the license includes LiveLink™ *for* Excel® you can also load variables from a Microsoft Excel Workbook spreadsheet. Then an **Excel Load** dialog box appears where you can specify the sheet and range, whether to overwrite existing data, and declare if the data is stored using a separate column for units.

	For an example of global variables, see *Effective Diffusivity in Porous Materials*: Application Library path **COMSOL_Multiphysics/Diffusion/effective_diffusivity** For examples of local variables see: • *Automotive Muffler*: Application Library path **COMSOL_Multiphysics/Acoustics/automotive_muffler** • *Tubular Reactor with Nonisothermal Cooling Jacket*: Application Library path **COMSOL_Multiphysics/Chemical_Engineering/tubular_reactor**

Variable Utilities

You can add **Variable Utilities** ( ) from the **Definitions** node under the **Component** (local) nodes. If **Group by Type** is active, the variable utility nodes appear in the **Variable Utilities** (branch.

	To display the **Variable Utilities** node and its subnodes, click the **Show More Options** button ( ) or select it from the **Global Definition**s or **Definitions** nodes' context menu and select **Variable Utilities** in the **Show More Options** dialog box.

Right-click **Variable Utilities**, or right-click **Definitions**, and from the **Variable Utilities** submenu, choose from the following variable utility nodes:

- **Expression Operator**: for defining an operator that evaluates to arbitrary parameterized expressions on specified selections. See Expression Operator.
- **Matrix**: for defining a matrix of variables by entering the components of the matrix. See Matrix.
- **Matrix Inverse**: for computing a matrix inverse from an input matrix. See Matrix Inverse.
- **Matrix Diagonalization**: for diagonalization of a matrix, computing the eigenvalues and eigenvectors of a symmetric 3x3 matrix from an input matrix. See Matrix Diagonalization.
- **Matrix Decomposition (SVD)**: for computing a matrix decomposition using SVD (singular value decomposition) from an input matrix. This node computes singular values, singular vectors, a rotation matrix, and a stretch matrix from a general 1x1 to 9x9 matrix. See Matrix Decomposition (SVD).
- **Vector Transform**: for transforming a vector of component expressions from one coordinate system to another. See Vector Transform.
- **Matrix Transform**: for transforming rows or columns of a matrix of component expressions from one coordinate system to another. See Matrix Transform.
- **State Variables**: for defining dependent variables that are updated using an update expression before or after each completed solver step. See State Variables.
- **Participation Factors**: for computing modal participation factors. See Participation Factors.
- **Response Spectrum**: for computing modal participation factors and setting up data for a response spectrum analysis. See Response Spectrum.
- **Mass Properties**: for computing mass properties such as mass, volume, and center of mass. See Mass Properties.

Expression Operator

Add an **Expression Operator** node ( ) under **Definitions>Variable Utilities** (if **Group by Type** is active; otherwise, directly under **Definitions**) to define an operator that evaluates parameterized expressions on specified selections. You add it by right-clicking the **Definitions** node and choosing **Variable Utilities>Expression Operator** or by right-clicking the **Variable Utilities** node and choosing **Expression Operator**.

The **Expression Operator** node specifies an operator name, formal argument names and dimensions, a default expression, and a selection where the operator will be defined. Alternate expressions can be defined on subsets of the operator selection (also of lower dimensions) using Operator Contribution subnodes. The defining expressions can in addition to the formal arguments contain any variable and operator names that can be evaluated on the corresponding selection. When the operator is used in a model, different operator expressions may be evaluated

depending on where the operator is used, and variables in the expressions may evaluate differently depending on their selections.

	Arguments to the expression operator are substituted symbolically into its defining expressions. This means that an expression operator behaves in the same way as a nonlocal coupling, rather than as a function: when the actual argument is an expression, the argument expression is inserted into the defining expression and interpreted in that context. A function, in contrast, evaluates its arguments in the target context *before* the function is called.

GEOMETRIC ENTITY SELECTION

In this section, define the selection for the expression operator. By default, the **Geometry entity level** is set to **Entire model**, meaning that the operator will be available globally.

DEFINITION

In the **Expression** field, enter the default expression for the operator. This expression is the one that will be used on the parts of the **Expression Operator** node's selection that have *not* been overridden by an Operator Contribution subnode. The expression may contain both the specified formal argument names and other variables, which are assumed to exist on the selection. The output unit of the operator is derived from the default expression.

In the table of arguments, enter the name of each formal argument in the **Argument** column and its expected dimensions, in the form of a unit expression, in the **Dimensions** column. The dimensions are used when deriving the operator's dimensions and for checking unit consistency when the operator is used in expressions.

	Avoid unit expressions which are not the natural derived units for the given dimensions in the current unit system. When the operator is used, actual arguments are assumed to be in the natural derived units from where they are converted to the specified units. This adds a conversion factor that may cause surprising results.

Operator Contribution

Add an **Operator Contribution** subnode ( ) under an Expression Operator node to override the operator's defining expression on a subset of the parent's selection, including entities of lower dimension.

GEOMETRIC ENTITY SELECTION

In this section, define the selection for the contribution to the Expression Operator. By default, the **Geometric entity level** is set to **Domain**, but it is also possible to override the default expression only on entities of lower dimension.

DEFINITION

In the **Expression** field, enter an alternate expression for the Expression Operator defined by the parent node, to be used on the Operator Contribution's selection. The dimensions of the expression are checked and expected to agree with the operator dimensions derived from the default expression.

Default Model Inputs

The **Default Model Inputs** node ( ) can be added under **Global Definitions** to define constant values for model inputs that are used by default for the entire model. Right-click **Global Definitions** and choose **Default Model Inputs** to display or hide the **Default Model Inputs** node. The **Default Model Inputs** node also appears if it is hidden when a model input is requested (for example, from a material that is dependent on temperature). If you select the **Group by Type** option, the **Default Model Inputs** node appears under a **Shared Properties** node.

The default model inputs include most physical properties and are always available with a scalar default value. In the settings for the **Default Model Inputs** node you can change the default values, and you can also override them locally either by a dependent variable (field variable) for the same quantity or by a locally defined **Model Input** node (see Model Input).

Default model inputs are useful in the following ways:

- Model inputs have a central representation as a variable. The value of a model input variable can differ between components and geometry regions.
- There is no need, in most cases, to use a local model input in the physics interfaces.
- Any material using a model input will use the default model input, unless something else is specified.
- It makes it possible to use, for example, a temperature-dependent material property in a PDE interface, which can be evaluated as a default model input, possibly overridden by a local model input or by a temperature field from a Heat Transfer interface defined in the same component geometry.

Click the **Refresh** button ( ) to update the **Requested Model Inputs** section and the **Model input contributions** list in the **Browse Model Inputs** section to the latest changes in a physics feature, a material, or a coupling feature.

Click the **Reset All** button ( ) to reset all values to their default values.

The **Settings** window contains the following sections:

REQUESTED MODEL INPUTS

In this section any requested model inputs from the physics or materials appear.

The table of requested model inputs contains the following columns:

- The **Model input** column contains the names of the requested model inputs such as **Temperature**.
- The **Expression** column contains the expression that defines the model input, such as **comp1.T** for a temperature field in Component 1. The column will be editable if it does not contain an automatically matched quantity such as `comp1.T` for an existing temperature field. For example, if the expression comes from a **Model Input** node under **Definitions** in a model component. If the model input is editable, click the **Edit Expression** button ( ) underneath the table. You can also right-click the cell and choose, for example, **Edit Expression for Remaining Selections** to enter another value for remaining selections in the text field for the model input under **Expression for remaining selections** in the **Browse Model Inputs** section. The **Expression** column can also contain the value **Mixed**, which indicates an expression that is requested in two selections, and the expression is different on each selection (for example, it is a temperature field in one domain and a user-defined model input in another).
- The icon column contains an icon for the material or physics that requested the model input.
- The **Selection** column contains the geometric selection for the model input.
- The **Requested by** column contains the node that requested this model input. Click the **Go to Requesting Node** button ( ) to move to that node.

Click the **Create Model Input** button ( ) to create a local Model Input node that you can use to override the global model input in some part of the component geometry.

BROWSE MODEL INPUTS

In this section, you can select a physical quantity (all physical quantities can serve as model inputs) from the **General**, **Acoustics**, **Maxwell**, **Solid**, and **Transport** folders. You can also type in a physical quantity in the text field above the list and click the **Filter** button ( ) to filter the list of model inputs. If the **Show Only Contributed and Requested Model Inputs** button ( ) is active, the list of physical quantities only contains such physical quantities that are either contributed or requested model inputs.

When you have selected a model input, its default value is displayed below the list of model inputs under **Expression for remaining selection**, for example. The default value is a constant value, which can be useful, for example, for evaluating an expression that used a model input before computing a solution. For many model inputs, the default value is 0, but for **Temperature**, for example, it is 293.15 K (20 degrees Celsius). You can change that value if you want to use another value for the temperature as a default model input, for example. Click the **Reset to Default** button ( ) to reset the value it the default value for that model input.

In the table under **Model input contributions**, the left column contains value of the model input, the **Selection** column contains its selection (**Remaining**, for example). The icon column contains an icon that represents the interface, or the **Default Model Inputs** node itself ( ), that contains the provider that contributed a model input. The **Provider** column contains the name of the provider of the model input.

Every physical quantities that can act as model inputs declares and defines a common variable that is always available (for example, `minput.T` for the temperature T). Any material property that depends on a model input quantity can be evaluated using the common variable.

	About Model Inputs

Model Input

Add a **Model Input** ( ) under **Definitions>Shared Properties** to define a local value for a model input in part of or all of the geometry in the component and for all physics interfaces in that component, overriding its value from the Default Model Inputs node and any value based on a dependent value from a physics interface. This functionality can be useful if you want to, for example, override a multiphysics coupling or specify a custom model input (such as a temperature defined by a PDE) for a multiphysics simulation.

The default **Name** is the same as the selected model input quantity (`T`, for example, for temperature).

The **Settings** window includes the following sections:

GEOMETRIC ENTITY SELECTION

In this section, define the geometric entities where this model input definition is active.

OVERRIDE

This section lists any other **Model Input** nodes that this node overrides or is overridden by. Only **Model Input** nodes with the same model input quantity and the same or an overlapping geometric entity selection can override or be overridden.

DEFINITION

Click the **Select Quantity** button ( ) to select a model input quality from the **General**, **Acoustics**, **Maxwell**, **Solid**, or **Transport** folder, or type a filter text and click the **Filter** button ( ) to filter the list of model inputs. Then type a value or expression in the text field for the selected model input quantity. Under **Variable name**, the variable name that represent this model input (`minput.T` for temperature, for example) appears.

State Variables

Add a **State Variables** node ( ) under **Definitions>Variable Utilities** in a model component or under **Global Definitions>Variable Utilities** to define *states* that are updated using an update expression at the beginning or end of each completed solver step. States are dependent variables in the model and stored as such in solutions, but they are explicitly updated by the solver after each converged time or parameter step rather than solved for in the usual

sense. Use state variables to, for example, store the previous-step value of some expression. This is useful, for example, when implementing material models with history dependence or *hysteresis*.

The **Settings** window contains the following sections:

GEOMETRIC ENTITY SELECTION

For a **State Variables** node in a component, use this section to define the geometric entities where the state variables should be defined at integration points in each element.

STATE COMPONENTS

Enter state variable names in the **State** column and corresponding initialization expressions in the **Initial value** column. These initial values are handled in the same way as for other dependent variables, depending on study and solver settings. Then specify an **Update expression** for each state variable. This expression is evaluated either after completion of a (time or parameter) solver step or at the very beginning of each new solver step. You can select this behavior by choosing to **Update** either **Before step** or **After step**. The default is to update **Before step**, which is appropriate for variables representing a value from the previous converged step.

When the **State Variables** node belongs to a component, select the **Order** of integration points in which the state variables will be defined. Allowed orders are even numbers between 0 and 14. The state variable degrees of freedom are defined in the same way as a standard dependent variable using *Gauss point data* shape functions. Typically choose the same order as the integration order used by the physics equations in the model. States defined in that way are suitable for storing material property history data locally at each point where it is used by the equations.

Optionally specify a custom **Description** for each state and select the **Allow complex values** check box to allow complex-valued state values when the solver is set to split complex values in real and imaginary parts.

Participation Factors

Add a **Participation Factors** node ( ) under **Definitions>Variable Utilities** in a model component for computing modal participation factors in structural simulations. Participation factors are measures that relate to the energy contained within each resonant mode (they represent the amount of system mass participating in a particular mode). See *Modal Participation Factors* in the *Structural Mechanics Module User's Guide* for more information.

When you add an Eigenfrequency study a **Participation Factors** node is automatically created.

The **Settings** window contains the following section:

CENTER OF ROTATION

From the **Center of rotation** list, choose **Center of mass** (the default) or **User defined** for defining the coordinates of the center of rotation in the **X**, **Y**, and **Z** field (the default names in a 3D structural mechanics model).

Response Spectrum

Add a **Response Spectrum** node ( ) under **Definitions>Variable Utilities** in a model component to prepare for response spectrum evaluations in structural simulations. This node serves two purposes:

- It defines participation factor variables, similar to a Participation Factors node. These variables are available for standard result presentation but are also used by the special response spectrum datasets.
- You can generate the model features necessary for computing *missing mass correction*, a method used in some response spectrum evaluations.

The **Settings** window contains the following section:

RESPONSE SPECTRUM

You need to access the settings in this node only if you are going to include a missing mass correction in your response spectrum analysis. In this case, a synchronization between the eigenfrequency study and the stationary study used to compute the forces from missing mass is needed.

From the **Eigenfrequency study** list, choose the study used for computing the eigenfrequencies to be used in the response spectrum evaluation. When the **Response Spectrum** node has been automatically created through the addition of a Response Spectrum study, the selection will as a default point to the corresponding study.

For creating the additional features needed for including missing mass correction into your response spectrum evaluation, click the **Create** button. The effect of doing so is:

- A number of load groups are created.
- A number of **Gravity** nodes are added to all structural mechanics interfaces in the component.
- A new study sequence is added for the stationary analyses needed to compute the missing mass correction.

	The **Response Spectrum** node requires the Structural Mechanics Module.

	For more information: • See Performing a Response Spectrum Analysis in the *Structural Mechanics Module User's Guide* for a general overview of how to set up a response spectrum analysis. • See *Modal Participation Factors* in the *Structural Mechanics Module User's Guide* for a discussion about participation factors. • See Response Spectrum 2D and Response Spectrum 3D for information about the datasets used for response spectrum evaluation.

Common Settings for the Definitions Nodes

Many nodes that can be added under the **Global Definitions** node or a **Definitions** node at the Component level share the same settings or use settings generally found throughout COMSOL Multiphysics.

COMMON BUTTONS ON THE SETTINGS WINDOWS

The following buttons are available on many of the **Settings** windows and are mostly self explanatory. These are not explicitly described or explained for every node.

	• About Selecting Geometric Entities • The Model Builder • Creating Named Selections

- In general, use the **Move Up** ( ), **Move Down** ( ), and **Delete** ( ) buttons and the fields under tables to edit the table contents. Or right-click a table cell and select **Move Up**, **Move Down**, or **Delete**.
- The **Add** button ( ) under a list of named selections opens an **Add** dialog box that contains all existing selections for the same geometric entity level.

- To save the contents of a table, click the **Save to File** button ( ) and enter a **File name** in the **Save to File** dialog box, including the extension `.txt`. Click to **Save** the text file. The information is saved in space-separated columns in the same order as displayed on screen.
- Use the **Load from File** button ( ) and **Load from File** dialog box to import data in text files, generated by, for example, a spreadsheet program. Data must be separated by spaces or tabs (or be in a Microsoft Excel Workbook spreadsheet if the license includes LiveLink™ *for* Excel®).

NAME

For **Mass Properties**, **Participation Factors**, **Matrix** and other matrix utility nodes, **Selections**, and **Coordinate Systems**, you must specify a **Name** that is unique within the model component where the feature is added. You can use this Name in expressions, and it is also the node's **Tag**. A unique default **Name** is always generated when the node is created. See Settings and Properties Windows for Feature Nodes and Displaying Node Names, Tags, and Types in the Model Builder for more information.

For **Coordinate Systems** it provides a namespace for variables created by the coordinate system. The default **Name** is `sys1`. For example, the determinant of the coordinate system's transformation matrix can typically be accessed in equations and postprocessing as `sys1.detT`. See the **Equation View** subnode for a complete list of available variables.

	To display the **Equation View** node under all nodes creating variables, click the **Show More Options** button ( ) and select **Equation View** in the **Show More Options** dialog box. See also Equation View.

FUNCTION NAME

For all **Functions** you must specify a **Function name** that is unique on the global level or within the model component where the feature is added. You can use this function name or operator name in expressions, and it is also the node's **Tag**. A unique default function name or operator name is always generated when the node is created. See Functions.

VARIABLE NAME

For all **Probes** you must specify a **Variable name** that is unique within the model component where the feature is added. You can use this Variable name in expressions, and it is also the node's **Tag**. A unique default Variable name is always generated when the node is created. See Probes.

OPERATOR NAME

For all **Nonlocal Couplings** you must specify an **Operator name** that is unique within the model component where the feature is added. You can use this Operator name in expressions, and it is also the node's **Tag**. A unique default Operator name is always generated when the node is created. See Nonlocal Couplings and Coupling Operators.

PAIR NAME

For all **Pairs** you must specify a **Pair name** that is unique within the model component where the feature is added. You can use this Pair name in expressions, and it is also the node's **Tag**. A unique default Pair name is always generated when the node is created. See Identity and Contact Pairs.

	To display the **Equation View** node under all nodes creating variables, click the **Show More Options** button ( ) and select **Equation View** in the **Show More Options** dialog box. See also Equation View.

	• Settings and Properties Windows for Feature Nodes • Displaying Node Names, Tags, and Types in the Model Builder • Editing Node Properties, Names, and Labels

Operators, Functions, and Constants

Many built-in mathematical and logical operators, functions, and constants can be used to specify parameters, variables, equation coefficients, and material properties. These tables list the unary and binary operators (Table 5-1 and Table 5-2), special operators (Table 5-8), mathematical functions and constants (Table 5-6), and physical constants predefined as variables (Table 5-7) that are available in COMSOL Multiphysics. See also Nonlocal Couplings and Coupling Operators for information about coupling operators.

Unary, Binary, and List Operators and Their Precedence Rules

TABLE 5-1: UNARY OPERATORS

OPERATOR	DESCRIPTION
+	Unary plus
-	Unary minus
!	Logical not

The binary operators include arithmetic and logical operations.

TABLE 5-2: BINARY OPERATORS

OPERATOR	DESCRIPTION
+	Plus
-	Minus
*	Multiply
/	Divide
^	Power
==	Equal
!=	Not equal
>	Greater than
>=	Greater than or equal to
<	Less than
<=	Less than or equal to
&&	Logical and
||	Logical or

A comparison using a binary operator can be, for example `x<1`, which returns 1 (true) if x is smaller than 1and 0 (false) otherwise. For a composite comparison such as $0 < x < 1$, you can achieve it using `(0<x)*(x<1)`. An expression like `0<x<1` is possible to use but is evaluated as `(0<x)<1`, which for an x in the interval is interpreted as `1<1` and thus returns 0 instead of 1 for all such value of x.

The following operators are used for precedence, grouping, lists, and unit definitions:

TABLE 5-3: GROUPING, LIST, AND UNIT OPERATORS

OPERATOR	DESCRIPTION
()	Parentheses for controlling precedence in expressions
{}	Vector and tensor expressions
,	Element separator in lists
.	Scoping operator
[]	Unit

The following list shows the precedence order for the operators above:

TABLE 5-4: PRECEDENCE LEVELS

PRECEDENCE LEVEL	SYMBOL	DESCRIPTION
1	`() {} .`	Grouping, lists, namespace
2	`^`	Power
3	`! - +`	Unary: logical not, minus, plus
4	`[ ]`	Unit
5	`* /`	Multiplication, division
6	`+ -`	Addition, subtraction
7	`< <= > >=`	Comparisons: less than, less than or equal, more than, more than or equal
8	`== !=`	Comparisons: equal, not equal
9	`&&`	Logical and
10	`||`	Logical or
11	`,`	Element separator in lists

Mathematical and Numerical Constants

The following table includes the built-in mathematical and numerical constants. The names of these constants are reserved names. You cannot use such reserved constant names when creating user-defined variables and parameters.

TABLE 5-5: MATHEMATICAL AND NUMERICAL CONSTANTS

NAME	DESCRIPTION
`eps`	Floating-point relative accuracy (machine epsilon, 2^{-52} or about $2.2204 \cdot 10^{-16}$, for double floating-point numbers).
`i`, `j`	Imaginary unit, $\sqrt{-1}$.
`inf`, `Inf`	Infinity, ∞. A value larger than what can be handled with floating-point representation.
`NaN`, `nan`	Not-a-number. An undefined or unrepresentable value such as the result of `0/0` or `inf/inf`.
`pi`	Pi (about 3.141592653589793).

Mathematical Functions

The following list includes the built-in mathematical functions that you can use when defining variables or directly in expressions in the physics interface or feature settings, for example. The function names are reserved names that cannot be used for user-defined functions, but they can be used for variable and parameter names.

TABLE 5-6: MATHEMATICAL FUNCTIONS

NAME	DESCRIPTION	SYNTAX EXAMPLE
`abs`	Absolute value	`abs(x)`
`acos`	Inverse cosine (in radians)	`acos(x)`
`acosh`	Inverse hyperbolic cosine	`acosh(x)`
`acot`	Inverse cotangent (in radians)	`acot(x)`
`acoth`	Inverse hyperbolic cotangent	`acoth(x)`
`acsc`	Inverse cosecant (in radians)	`acsc(x)`
`acsch`	Inverse hyperbolic cosecant	`acsch(x)`
`arg`	Phase angle (in radians)	`arg(x)`
`asec`	Inverse secant (in radians)	`asec(x)`
`asech`	Inverse hyperbolic secant	`asech(x)`

TABLE 5-6: MATHEMATICAL FUNCTIONS

NAME	DESCRIPTION	SYNTAX EXAMPLE
`asin`	Inverse sine (in radians)	`asin(x)`
`asinh`	Inverse hyperbolic sine	`asinh(x)`
`atan`	Inverse tangent (in radians)	`atan(x)`
`atan2`	Four-quadrant inverse tangent (in radians)	`atan2(y,x)`
`atanh`	Inverse hyperbolic tangent	`atanh(x)`
`besselj`	Bessel function of the first kind	`besselj(a,x)`
`bessely`	Bessel function of the second kind	`bessely(a,x)`
`besseli`	Modified Bessel function of the first kind	`besseli(a,x)`
`besselk`	Modified Bessel function of the second kind	`besselk(a,x)`
`ceil`	Nearest following integer	`ceil(x)`
`conj`	Complex conjugate	`conj(x)`
`cos`	Cosine (argument in radians)	`cos(x)`
`cosh`	Hyperbolic cosine	`cosh(x)`
`cot`	Cotangent (argument in radians)	`cot(x)`
`coth`	Hyperbolic cotangent	`coth(x)`
`csc`	Cosecant (argument in radians)	`csc(x)`
`csch`	Hyperbolic cosecant	`csch(x)`
`erf`	Error function	`erf(x)`
`erfinv`	Inverse error function	`erfinv(x)`
`exp`	Exponential function e^x. That is, `exp(1)` is the mathematical constant e (Euler's number).	`exp(x)`
`floor`	Nearest previous integer	`floor(x)`
`gamma`	Gamma function	`gamma(x)`
`imag`	Imaginary part	`imag(u)`
`log`	Natural logarithm	`log(x)`
`log10`	Common logarithm (base 10)	`log10(x)`
`log2`	Base-2 logarithm	`log2(x)`
`max`	Maximum of two arguments	`max(a,b)`
`min`	Minimum of two arguments	`min(a,b)`
`mod`	Modulo operator	`mod(a,b)`
`psi`	Psi function and its derivatives	`psi(x,k)`
`random`	Random function, uniform distribution	`random(x,y)`
`randomnormal`	Random function, normal (Gaussian) distribution	`randomnormal(x,y)`
`range`	Create a range of numbers	`range(a,step,b)`
`real`	Real part	`real(u)`
`round`	Round to closest integer	`round(x)`
`sec`	Secant (argument in radians)	`sec(x)`
`sech`	Hyperbolic secant	`sech(x)`
`sign`	Signum function	`sign(u)`
`sin`	Sine (argument in radians)	`sin(x)`
`sinh`	Hyperbolic sine	`sinh(x)`

TABLE 5-6: MATHEMATICAL FUNCTIONS

NAME	DESCRIPTION	SYNTAX EXAMPLE
sqrt	Square root	sqrt(x)
tan	Tangent (argument in radians)	tan(x)
tanh	Hyperbolic tangent	tanh(x)

Physical Constants

Physical constants are fundamental, universal constants that represent physical quantities. COMSOL Multiphysics includes the most widely used physical constants as built-in constants. Table 5-7 lists all supported physical constants with their names, symbol (variable name), value, and SI unit. The values are taken from Ref. 1 and include the SI unit.

TABLE 5-7: PHYSICAL CONSTANTS

NAME	SYMBOL	VALUE
Acceleration of gravity	g_const	9.80665[m/s^2]
Avogadro constant	N_A_const	6.02214076e23[1/mol]
Boltzmann constant	k_B_const	1.380649e-23[J/K]
Characteristic impedance of vacuum (impedance of free space)	Z0_const	376.730313461...[ohm] (mu0*c)
Electron mass	me_const	9.10938356e-31[kg]
Elementary charge	e_const	1.602176634e-19[C]
Faraday constant	F_const	96485.33289[C/mol]
Fine-structure constant	alpha_const	7.2973525664e-3
Gravitational constant	G_const	6.67408e-11[m^3/(kg*s^2)]
Molar volume of ideal gas (at 273.15 K and 1 atm)	V_m_const	22.413962e-3[m^3/mol]
Neutron mass	mn_const	1.674927471e-27[kg]
Permeability of vacuum (magnetic constant)	mu0_const	2*alpha_const*h_const/c_const/e_const/e_const (H/m)
Permittivity of vacuum (electric constant)	epsilon0_const	1/mu0_const/c_const/c_const (F/m)
Planck's constant	h_const	6.62607015e-34[J*s]
Planck's constant over 2 pi	hbar_const	1.05457180e-34[J*s]
Proton mass	mp_const	1.672621898e-27[kg]
Speed of light in vacuum	c_const	299792458[m/s]
Stefan-Boltzmann constant	sigma_const	5.670367e-8[W/(m^2*K^4)]
Universal gas constant (molar gas constant)	R_const	8.3144598[J/(mol*K)]
Wien displacement law constant	b_const	2.8977729e-3[m*K]

REFERENCE

1. *The NIST Reference on Constants, Units, and Uncertainty*, http://physics.nist.gov/cuu/Constants/index.html

Built-In Operators

There are special built-in operators available for modeling and for evaluating results; these operators are similar to functions but behave differently. Many physics interfaces use these operators to implement equations and special functionality. See Table 5-8 and the detailed descriptions that follow.

TABLE 5-8: BUILT-IN OPERATORS

OPERATOR	DESCRIPTION	LINK TO MORE INFORMATION
`adj(expr)`	Evaluate expression using the adjoint sensitivity.	adj
`at`	Access the solution at any time.	at
`atlocal`	Evaluate expression at given local coordinates in each mesh element.	atlocal
`attimemax` `attimemin`	Evaluates an expression at the time where another expression achieves its maximum or minimum.	attimemax and attimemin
`atxd`, `atonly`, `noxd`	Evaluation of expressions in extra dimensions.	atxd, atonly, and noxd
`ballint(r,expr)`, `ballavg(r,expr)`, `circint(r,expr)`, `circavg(r,expr)`, `diskint(r,expr)`, `diskavg(r,expr)`, `sphint(r,expr)`, `sphavg(r,expr)`	Evaluates the integral or average of the expression on the specified shape with radius *r*.	ball, circle, disk, and sphere
`bdf(expr,i)`	Apply backward differentiation formula of order *i* on expression.	bdf
`bndenv(expr)`	Evaluates the expression *expr* at the coordinates of a particle or ray at a boundary.	env, bndenv, and noenv
`centroid(expr)`	Evaluates the expression *expr* in the centroid of the mesh element to which the point belongs.	centroid
`circumcenter(expr)`	Evaluates the expression *expr* in the circumcenter of the mesh element to which the point belongs.	circumcenter
`d(f,x)`	Differentiation operator. Differentiation of `f` with respect to `x`.	Differentiation Operators: d, pd, dtang and frame.dt
`depends(expr)` `depends(expr,var)`	True if expression *expr* depends on the solution or *var*, respectively.	depends
`dest(expr)`	Evaluate parts of an integration coupling expression on destination side.	dest
`down(expr)`	Evaluate expression as defined in adjacent downside.	up and down
`dtang(f,x)`	Tangential differentiation of an expression `f` defined on a boundary with respect to a spatial dimension `x`.	Differentiation Operators: d, pd, dtang and frame.dt

`emetric(exprx,expry)`
`emetric(exprx,expry,`
`exprz)`
	The square of the length of the global vector (*exprx*, *expry*, *exprz*) computed in the mesh element's own metric.	emetric

`env(expr)`	Evaluates the expression *expr* at the coordinates of a particle or ray in a domain.	env, bndenv, and noenv
`error('string')`	Generates an error with error message *string*.	error
frame`.dt(expr)`	Compute time derivative with respect to a specified frame	Differentiation Operators: d, pd, dtang and frame.dt

TABLE 5-8: BUILT-IN OPERATORS

OPERATOR	DESCRIPTION	LINK TO MORE INFORMATION
`fsens(p)` `fsensimag(p)`	Functional sensitivity with respect to control variable *p*. Functional sensitivity with respect to imaginary part of control variable *p*.	fsens and fsensimag
`gpeval(gporder,expr)` `gpeval(gporder,expr, exorder)`	Evaluate expression in the specified Gauss point pattern and extrapolate the result to the input evaluation points.	gpeval
`if(cond,expr1,expr2)`	Conditional expression evaluating the second or third argument depending on the value of the condition.	if
`integrate(expr,var, lower,upper)`	Evaluate integral of general expression with respect to an integration variable over a real interval specified by lower and upper limits.	integrate
`isdefined(variable)`	Returns one where the variable is defined and zero where it is not defined.	
`isinf(expr)`	True if expression evaluates to infinity.	isinf and isnan
`islinear(expr)`	True if expression is a linear function of the solution.	islinear
`isnan(expr)`	True if expression evaluates to NaN (not-a-number).	isinf and isnan
`jacdepends(expr)` `jacdepends(expr,var)`	True if the derivative of the expression *expr* with respect to the solution depends on the solution or *var*, respectively.	jacdepends
`lindev`	Evaluate an expression linearized at the linearization point (when a linearization point is stored in the solution).	lindev
`linper`	Marks a load term to be used in a Linear perturbation solver.	linper
`linpoint`	Access the linearization point (when a linearization point is stored in the solution).	linpoint
`linsol`	Access the standard solution (for example inside `linpoint` or `lintotal`).	linsol
`lintotal`	Access the sum of the linearization point and linear perturbation.	lintotal
`lintotalavg`	Evaluate average of `lintotal(expr)` over all phases.	lintotalavg
`lintotalpeak`	Evaluate maximum of `lintotal(expr)` over all phases.	lintotalpeak
`lintotalrms`	Evaluate RMS of `lintotal(expr)` over all phases.	lintotalrms
`linzero`	Evaluate expression with zero solution.	linzero
`mean(expr)`	Mean value of expression as evaluated on adjacent boundaries.	mean
`nif(cond1,expr1,...,condn,exprn,exprn+1)`	Nested if operator. Evaluating the *expr* after the first *cond* to return true.	nif
`noenv(expr)`	Evaluates an expression `expr` that is defined only on particles or rays, not the domain or boundary where the particles or rays are located.	env, bndenv, and noenv
`nojac(expr)`	No contribution to the Jacobian.	nojac

TABLE 5-8: BUILT-IN OPERATORS

OPERATOR	DESCRIPTION	LINK TO MORE INFORMATION
`pd(f,x)`	Differentiation operator. Differentiation of `f` with respect to `x`. No chain rule for dependent variables.	Differentiation Operators: d, pd, dtang and frame.dt
`ppr`	Polynomial-preserving derivative recovery.	ppr and pprint
`pprint`	Polynomial-preserving derivative recovery within each domain group.	ppr and pprint
`prev(expr,i)`	Evaluate expression at the *i*th previous time step.	prev
`reacf(u)` `reacf(u,dim)`	Accurate evaluation of reaction forces and fluxes.	reacf
`realdot(a,b)`	Treat complex numbers *a* and *b* as real 2-vectors and return their dot product.	realdot
`residual(expr)`	Evaluate last computed residual.	residual
`scope.atenti(ent, expr)`	Evaluates the expression *expr* at an *i*-dimensional entity with number *ent*.	entity at
`scope.ati(coordinate exprs,expr)` `scope.ati(coordinate exprs,expr,'evaltype')`	Evaluates the expression *expr* at an *i*-dimensional entity in the point with coordinates given by the coordinate expressions *coordinate exprs*.	spatial at
`sens(expr,i)`	Evaluate expression using the forward sensitivity for the parameter given by the second argument.	sens
`setconst(const,value)`	Define temporary constant in `withsol`.	setconst
`setind(par,index)` `setval(par,value)`	Specify parameter index or parameter value in `withsol`.	setind and setval
`shapeorder(variable)`	The element order used for discretization of a variable.	shapeorder
`side(entity,expr)`	Evaluate expression as defined in the adjacent entity.	side
`std(operator,arg1, arg2,...)`	Evaluate the standard deviation for an integration, projection, or summation operator	stddev
`subst(expr, expr1_orig, expr1_subst,...)`	Substitute variables in an expression with other variables or expressions.	subst
`sum(expr,index, lower,upper)`	Evaluate sum of general expression for all indices from lower to upper.	sum
`test(expr)`	Test function operator.	test
`timeint`, `timeavg`	Integrate or compute the average of a time-dependent expression over a time interval.	timeint and timeavg
`timemax`, `timemin`	Evaluates the maximum or minimum of an expression over time.	timemax and timemin
`treatasconst(expr)`	Treat *expr* as independent of the solution.	treatasconst
`try_catch(tryExpr, catchExpr)`	Attempts to evaluate *tryExpr*, but if this fails for any point, *catchExpr* is evaluated instead.	try_catch
`uflux(u), dflux(u)`	Evaluate the flux associated to a dependent variable *u* into the domains on the up and down sides of a boundary, respectively.	Boundary Flux Operators: uflux and dflux
`up(expr)`	Evaluate expression as defined in adjacent upside.	up and down
`var(expr,fieldname1, fieldname2, ...)`	Variation operator.	var

TABLE 5-8: BUILT-IN OPERATORS

OPERATOR	DESCRIPTION	LINK TO MORE INFORMATION
`with`	Access specific solutions during results evaluation.	with
`withsol(`*`tag`*`,`*`expr`*`)`	Access solution defined by solver tag.	withsol

ADJ

- When you apply the adjoint sensitivity operator `adj` to an expression, COMSOL Multiphysics uses the adjoint sensitivity solution instead of the primal solution for the evaluation.
- The adjoint sensitivity solution is available for results when the sensitivity solver has been used with the adjoint sensitivity method, and for the dependent variables that have been solved for.

AT

- The `at` operator can access a solution to a time-dependent problem at any time. COMSOL Multiphysics provides the solution at that time using interpolation. You can use the at operator to compare two solutions at different times during results evaluation; for example, `at(30,u)-at(20,u)` is the difference between the solution at 30 s and the solution at 20 s.
- The first input argument is the time. The second input argument is the expression that you want to evaluate using this solution. For example, `at(12.5,u)` is the solution at 12.5 s. The time must be within the simulation time span but does not have to be a specified output time. If it is not, then the `at` operator uses interpolation to compute the data values at that time.
- You can also use `'first'` or `'last'` as the first argument to evaluate an expression at the first or last time of the simulation, respectively.
- The `at` operator can only be used during results evaluation, so it should not be used when setting up the model.

See also withsol for a more general operator.

ATLOCAL

- The `atlocal` operator takes 2, 3, or 4 arguments depending on the dimension of the geometrical entity it is being evaluated on.
- For example, on a three-dimensional entity, `atlocal(xi1,xi2,xi3,expr)` evaluates `expr` at the point with local coordinates (ξ_1, ξ_2, ξ_3) in each mesh element. On a two-dimensional entity the syntax is `atlocal(xi1,xi2,expr)` and on a one-dimensional entity it is `atlocal(xi1,expr)`.

ATTIMEMAX AND ATTIMEMIN

- The `attimemax` and `attimemin` operators evaluate an expression at the time where another expression achieves its maximum or minimum, respectively. `attimemax(t1,t2,expr1,expr2)` finds the time t_0 on the interval $t_1 \le t \le t_2$ where `expr1(t)` is maximal and computes `expr2(t0)`. The first two arguments must be real constants.
- `attimemax(t1,t2,expr1,expr2,'nointerp')` and `attimemin(t1,t2,expr1,expr2,'nointerp')` evaluate the maximum or minimum without doing any interpolation between the stored time steps. This variant might be less accurate but faster and more robust.
- The `attimemax` and `attimemin` operators can only be used during results evaluation, so you cannot use then when setting up the model. See timemax and timemin for similar operators.

ATXD, ATONLY, AND NOXD

When working with extra dimensions, evaluation can be done in either a standard base geometry, in an extra dimension geometry, or in a product of a base geometry and one or several extra dimension geometries. The `atxd`, `atonly`, and `noxd` operators modify the evaluation context by adding or removing geometries from the current product.

All of these operators have a scope indicating the base geometry or extra dimension to which they belong. The scope for base geometries is typically `comp1`, `comp2`, and so on, while the scope for extra dimensions is typically `xdim1`, `xdim2`, and so on. Also, the `atxd` operators have a suffix 0, 1, 2, or 3, which indicates the dimension of the geometric entities where their argument is evaluated. So, the complete name of an `atxd` operator is, for example, `xdim1.atxd2`, and the complete name of an `atonly` or `noxd` operator is, for example, `comp1.atonly` or `xdim1.noxd`.

The `atxd` operators add another geometry to the current product. Suppose, for example, that you have a 2D base geometry with scope `comp1`, and a 2D extra dimension geometry with scope `xdim1`. Starting in an evaluation context in the base geometry, `xdim1.atxd1(2,3,`*`expr`*`)` evaluates *expr* in the product of `comp1` and `xdim1`, at a point on the boundary in `xdim1` with coordinates (2, 3). Starting in an evaluation context in the extra dimension, `comp1.atxd2(4,5,`*`expr`*`)` evaluates *expr* in the product of `comp1` and `xdim1`, at a point in a domain in `comp1` with coordinates (4, 5).

When there is a product of a base geometry with more than one extra dimension, several nested `atxd` operators can be used to specify evaluation in the product. For example, suppose `xdim2` and `xdim3` are 1D extra dimensions attached to a base geometry `comp1`. Starting in the base geometry, `xdim2.atxd1(2,xdim3.atxd0(3,`*`expr`*`))` evaluates *expr* in the product of `comp1` with `xdim2` and `xdim3`. The order of applying the two operators is inconsequential.

The following points are worth noting about the `atxd` operators:

- The number of arguments is always `sdim`+1, where `sdim` is the dimension of the geometry indicated by the scope of the operator.
- The first `sdim` arguments specify coordinates in this geometry. They must be constant in the current evaluation context.
- The last argument is an expression that is evaluated in the product context specified by the operator.
- The operator name suffix is an integer i in the range $0 \le i \le$ `sdim`.
- The product geometry specified by the operator must have been created using an Attached Dimensions feature in the model.

The `atonly` operators remove all but one geometries from the current product. Consider again the example where `comp1` is a base geometry and `xdim1` is an extra dimension. Starting in the product of `comp1` and `xdim1`, `comp1.atonly(`*`expr`*`)` evaluates *expr* in the base geometry, and `xdim1.atonly(`*`expr`*`)` evaluates *expr* in the extra dimension. *expr* must be available in the geometry corresponding to the `atonly` prefix (for example, in the base geometry for `comp1.atonly`).

The `noxd` operators are similar to the `atonly` operators, but instead remove a single geometry from the current product. This is most useful in products with more than one extra dimension, because in products with just one extra dimension, an `atonly` operator can be used instead. For example, in the product of a base geometry `comp1`, and extra dimensions `xdim2` and `xdim3`, `xdim2.noxd(`*`expr`*`)` evaluates *expr* in the product of `comp1` and `xdim3`.

BALL, CIRCLE, DISK, AND SPHERE

- The `ballint`(r, *expr*) operator computes the volume integral of the expression *expr* in a ball with radius r around the point in which it is evaluated. The `ballint` operator can be evaluated on all entities in 3D.
- The `ballavg`(r, *expr*) operator is defined as `ballint`(r, *expr*)/`ballint`(r, 1).
- The `circint`(r, *expr*) operator computes the curve integral of the expression **expr** on a circle with radius r around the point in which it is evaluated. The `circint` operator can be evaluated on all entities in 2D and on edges in 3D, when used in 3D the integration is done on the circle in the normal plane to the edge.
- The `circavg`(r, **expr**) operator is defined as `circint`(r, **expr**)/`circint`(r, 1).
- The `diskint`(r, **expr**) is similar to the `circint` operator but calculates the surface integral on a disk instead.

- The `diskavg`(r, expr) operator is defined as `diskint`(r, expr)/`diskint`(r, 1).
- The `sphint`(r, expr) is similar to the `ballint` operator but computes the surface integral on a sphere instead.
- The `sphavg`(r, expr) operator is defined as `sphint`(r, expr)/`sphint`(r, 1).
- All of operators can be used with a third argument N that approximately specifies the number of integration points used — for example, `circint`(r, expr,100).
- To all operators you can add a suffix ("`_frameId`") that specifies the frame in which the integration is done — for example, `circint_spatial`(r, expr).
- The expression expr may contain the `dest` operator. The `dest` operator forces its expression to be evaluated in the center of the sphere or circle. You can use it, for instance, with a `sphint` operator to write expressions including the sphere's normal direction.

BDF

- Use the `bdf` operator to approximate time derivatives when the time discrete solver is used.
- The expression `bdf(`*expr*, *i*`)` results in a discretization of the time derivative of *expr* using a backward differentiation formula.
- The second argument, i, determines the order of accuracy of the discretization. Currently, first order and second order is available, so allowed values are $i = 1$ and $i = 2$. A second-order formula requires access to two previous time steps. Because this is not possible at the initial step, the evaluation at the initial step always uses the first-order formula.
- The `bdf` operator can be implemented using the `prev` operator. For example, obtain the first-order backward differentiation formula, also known as the backward Euler method, through `bdf(u,1) = (u-prev(u,1))/timestep`.

BOUNDARY FLUX OPERATORS: UFLUX AND DFLUX

- If you have selected **Compute boundary fluxes** in a physics interface defining a dependent variable u, `uflux(u)` and `dflux(u)`, when evaluated on a boundary, give an accurate value of the boundary flux into the domains on the up and down side of the boundary, respectively.
- If you have not selected **Compute boundary fluxes**, the `uflux` and `dflux` operators give a less accurate value of the flux into the domain, based on the gradient of u. The less accurate method is always used if the operators are evaluated during solution because accurate boundary fluxes are not available then.
- The flux for different frames can be obtained by appending `_material`, `_spatial`, `_mesh`, or `_geometry` to the operator names. The default is the material frame.

	The `uflux` and `dflux` operators are only applicable to dependent variables defined by physics interfaces that support accurate boundary fluxes.

	Computing Accurate Fluxes

CENTROID

- The `centroid`(*expr*) operator evaluates the expression *expr* in the centroid of the mesh element to which the point belongs.
- Note that the operator is context-sensitive in the sense that it chooses the mesh element of the same dimension (a point often belongs to several different mesh elements) as the context in which the evaluation is performed.

CIRCUMCENTER

- The `circumcenter`(**expr**) operator evaluates the expression **expr** in the circumcenter of the mesh element to which the point belongs. This point is in general only well defined for simplices. For other mesh elements, a point with approximately the same distance to all vertices of the mesh element is computed.
- Note that the operator is context-sensitive in the sense that it chooses the mesh element of the same dimension (a point often belongs to several different mesh elements) as the context in which the evaluation is performed.
- You can add a suffix ("*_frameId*") that specifies the frame in which the evaluation is done — for example, `circumcenter_spatial`(**expr**).

DIFFERENTIATION OPERATORS: D, PD, DTANG AND FRAME.DT

- All differentiation operators (`d`, `pd`, and `dtang` and *`frame`*`.dt`) can be used both in model settings and in results evaluation.
- Use the `d` operator to differentiate a variable with respect to another variable, using the chain rule for dependent variables. For example, `d(T,x)` means differentiation of T with respect to x. Some space derivatives are also available using predefined variables. For example, `uxx`, `d(ux,x)`, and `d(d(u,x),x)` are equivalent for a dependent variable `u` when evaluated in a domain. On a boundary, however, `d(u,x)` is undefined, while `ux` is the average of the values from the adjacent domains.
- The `pd` operator works in a similar way to the `d` operator. The main difference is that `pd(u,x)` is 0 rather than `ux` (no chain rule is applied for dependent variables).
- Use the `dtang` operator to compute components of the gradient of an expression projected onto the plane tangent to the boundary where the evaluation takes place. The `dtang` operator can be applied to expressions that are only defined on the boundary and therefore cannot be differentiated by the `d` operator. In a 3D model, `(dtang(f,x), dtang(f,y), dtang(f,z))` is a vector in the tangent plane of a boundary at the point where it is evaluated, and similarly in a 2D model, `(dtang(f,x), dtang(f,y))` is a vector in the tangent line of a boundary point. When evaluated in a domain, `dtang(f,x)` is the same as `d(f,x)`. The second argument of `dtang(f,x)` must be one of the spatial coordinates. Not all quantities have rules for evaluating tangential derivatives. Applying `dtang(f,x)` to an expression with no tangential derivative rule results in an error message.
- Use *`frame`*`.dt` in a domain to compute the time derivative of an expression for fixed coordinates in the specified frame. For example, `spatial.dt(T)` is the time derivative of the field T as seen by an observer which is stationary at fixed coordinates in the spatial frame. Similarly, `material.dt(T)` is the time derivative experienced by material particles, which are located at fixed coordinates in the material frame. In the presence of ALE, when the mesh is moving, these derivatives differ from the geometry and mesh time derivatives `geometry.dt(T)` and `mesh.dt(T)` by an additive convective term that is only well defined in domains (and not on boundaries, edges, and points).

Examples of Using the Differentiation Operators

The expressions `d(u^2,u)` and `pd(u^2,u)` both equal `2*u`; `d` also takes the spatial and time variables into account and treats their derivatives accordingly. In other words, if u is the dependent variable and x is a spatial coordinate, then `d(u+x,x)` equals `ux+1` (`ux` is the spatial derivative of u with respect to x), while `pd(u+x,x)` equals `1` because u is considered to be independent of anything but itself in the case of `pd`.

If a time-dependent model in 2D contains two dependent variables u and v, use `mesh.dt(u*v)` to compute the derivative of the product uv for fixed nodes in the mesh. This is equivalent to explicit differentiation with respect to the mesh time symbol `TIME`, written `d(u*v,TIME)`, which is in turn using the chain rule equivalent to `u*vTIME+uTIME*v` (using built-in time derivative variable names). In a similar way, the corresponding spatial time derivative `spatial.dt(u*v)`, computed for fixed spatial coordinates, expands using the chain rule to `u*vTIME+uTIME*v-mesh.dt(x)*d(u*v,x)-mesh.dt(y)*d(u*v,y)`. Note that if the spatial coordinates of the mesh nodes are fixed, the mesh velocities `mesh.dt(x)` and `mesh.dt(y)` vanish, and the remaining expression is the same as for `mesh.dt(u*v)`.

If u is a dependent variable defined only on a boundary, `d(u,x)` is not defined, but the tangential derivative `dtang(u,x)` can be evaluated on the boundary. The tangential derivative obeys most of the common differentiation rules, such as the product rule and the chain rule. However, `dtang(x,x)` is not always equal to 1; its value depends on the orientation of the boundary relative to the coordinate axes.

DEPENDS

- The `depends(`*`expr`*`)` operator returns 1 if the expression *`expr`* that it operates on depends on the solution; otherwise it returns 0.
- `depends(`*`expr`*`,` *`var`*`)` returns 1 if *`expr`* depends on *`var`*; otherwise it returns 0.

Use this operator to check user-defined expressions for dependency on the solution.

DEST

The `dest` (destination) operator is available for the following operators:

- Coupling operators: Integration, Maximum, Minimum, General Projection, Linear Projection, and Integration Over Extra Dimension.
- Built-in operators: `ballint`, `ballavg`, `circint`, `circavg`, `diskint`, `diskavg`, `sphint`, and `sphavg`.

The `dest` operator forces the expression that it operates on to be evaluated on the destination points instead of the source points. This means that the destination operator can be used to create convolution integrals and other integral transforms. For instance, integrating the expression `u/((dest(x)-x)^2+(dest(y)-y)^2)` gives the following function of x and y:

$$f(x,y) = \int \frac{u(x',y')}{(x-x')^2+(y-y')^2} dx'dy'$$

The `dest` operator can also be used in the operator listed in the section ball, circle, disk, and sphere. In this context, the forced point of evaluation is the center of the sphere or circle. You can use it, for instance, with a `sphint` operator to write expressions including the sphere's normal direction.

EMETRIC

The `emetric(`*`vector`*`)` returns the square of the length of a 2-vector computed in the mesh element's own covariant metric. In this metric, the edges of the mesh element typically have length 1, and vectors orthogonal to the element have length 0. The number of input arguments defining the vector should be equal to the space dimension. You can add a frame suffix to change from the default material frame to the frame that you want. For instance, you can write `emetric_spatial(`*`vector`*`)`to use the spatial frame.

If you are more interested in the contravariant element metric, its components can be accessed by the variables `emetricinvxx`, `emetricinvxy`, `emetricinvXX`, and so on. See also the entries for `emetric2` and `tremetric` in Table 5-9 for related variables.

ENTITY AT

The *`scope`*`.atenti(`*`ent, expr`*`)` operator evaluates the expression *`expr`* in the geometry with the given scope (typically `comp1` for Component 1 or a similar scope for another Component branch) on the i-dimensional entity with number *`ent`*. The entity does not have to be meshed and not even be inside the geometry. Domains outside the geometry have nonpositive `dom` values.

	The evaluation is performed without a mesh and that the expression thus cannot depend on the position within the entity. For a similar operator, use *`scope`*`.at3(`*`coordinate exprs`*`,` *`expr`*`, 'mi');` see spatial at.

ENV, BNDENV, AND NOENV

	These operators can only be evaluated on particles or rays in a particle tracing or ray tracing simulation. Thus, the Particle Tracing Module, Ray Optics Module, or Acoustics Module is required.

- Evaluating `env`(**expr**) on a particle or ray evaluates **expr** at the point in the domain where the particle or ray is. When evaluating a variable **var** on a particle or ray, if the variable is not defined on the particle or ray it is automatically replaced by `env`(**var**). Therefore the `env` operator can often be omitted.
- Evaluating `bndenv`(**expr**) on a particle or ray, evaluates **expr** at the point on the boundary where the particle or ray is. If the particle or ray is not on a boundary, the evaluation fails. Use this operator instead of `env` when evaluating expressions that are only defined on boundaries.
- The `noenv(expr)` operator can only be used as part of an expression within the `env(expr)` or `bndenv(expr)` operator. The `noenv(expr)` operator is used to evaluate an expression `expr` that is defined for particles or rays but is not defined at their locations within a domain or on a boundary. For example, if you write `env(expr1*noenv(expr2))`, then the `expr1` must be defined in the domain where the particle or ray is, and `expr2` must be a quantity that is defined for individual particles or rays, such as the particle speed.

ERROR

- The `error`(**string**) operator generates an error with error message **string**.
- You can for instance use this operator to make assertions on how your solution should behave. If you write `if(`*`cond`*`,`*`expr`*`,`*`error('cond is false'))`* *`expr`* is calculated when *`cond`* is true and an error message is generated including the text *`cond is false`*, when *`cond`* is false.

FSENS AND FSENSIMAG

- The functional sensitivity operator `fsens` evaluates the sensitivity of the current objective functional with respect to the control variable given as the single argument. Note that the argument must be a control variable name; other dependent variables or general expression are not allowed.
- The functional sensitivity operator `fsensimag` evaluates the sensitivity of the current objective functional with respect to the imaginary part of the control variable given as the single argument.
- The functional sensitivity is available for analysis when the sensitivity solver has been used with either the adjoint or the forward sensitivity method, and for the control variables that have been solved for.

For a complex-valued control variable $z = x + iy$, denote a sensitivity function f as

$$f = f(z) = u(z) + iv(z)$$

When you use complex splitting, you can think of the sensitivity as a matrix of derivatives

$$J = \begin{pmatrix} u_x & v_x \\ u_y & v_y \end{pmatrix}$$

In that case, `fsens` returns the first row, and `fsensimag` returns the second row as $v^y - iu_y$.

GPEVAL

The `gpeval` operator evaluates the expression in the specified Gauss point pattern and extrapolates the result to the input evaluation points, using the specified extrapolation order.

- `gpeval(`*`gporder`*`,`*`expr`*`)` evaluates the expression *`expr`* in the in the Gauss point pattern given by the Gauss point order (integration order — see integration order in the *Glossary*) in *`gporder`* (a positive integer). The value

of *gporder* determines the points where *expr* is evaluated. Extrapolation (see below) is in this case done using an *exorder* set to 1.

- `gpeval(`*gporder*`,`*expr*`,`*exorder*`)` uses an optional extrapolation order *exorder*. The extrapolation order is an integer larger or equal to −1. −1 gives the maximum order given the value of *gporder*; the order used is limited by the number of Gauss points used. The extrapolation tries to create a polynomial approximation of expressions that are based on positions and values evaluated in the Gauss points. The order of such polynomials (*exorder*) cannot be arbitrarily high — the number of evaluation points limits the order of the polynomials.
- For products in extra dimension components, use the `gpeval` operator with an extra dimension scope such as `xdim1.gpeval`. If you evaluate an expression in an extra dimension product, `gpeval` with an extra dimension scope changes the Gauss points in the specified extra dimension geometry indicated by the scope (such as `xdim1`). Using `gpeval` without a scope changes the Gauss points in the base geometry.

IF

- The `if(`*cond*`,`*expr1*`,`*expr2*`)` operator implements a conditional expression.
- The first argument is a condition that COMSOL Multiphysics treats as a Boolean expression. If — at a particular evaluation point — `cond` is true, then the second argument is evaluated, otherwise the third argument is evaluated. That is, only one branch is evaluated at any evaluation point.
- Use the `if` operator to avoid illegal operations. For example, `if(x==0,1,sin(x)/x)` is a valid and continuous expression for all values of x, including $x = 0$.

See also nif for a nested conditional expression.

INTEGRATE

- `integrate(`*expr*`,`*var*`,`*lower*`,`*upper*`)` computes the integral of *expr* for the integration variable *var* over an interval specified by expressions *lower* for the lower limit and *upper* for the upper limit. The expressions for lower and upper limits do not have to be constants but are required to evaluate to real values.
- `integrate(`*expr*`,`*var*`,`*lower*`,`*upper*`,`*tol*`)` sets the relative tolerance in the numerical integration to *tol*. The default value of the relative tolerance (used when the fifth argument is omitted) is `1e-3`. The tolerance must be a real constant between 0 and 1.
- The expression *expr* might be any 1D function, such as $\sin(x)$. It is also possible to include additional variables, such as $\sin(xy)$. The second argument specifies over which variable the integral is calculated. For example, `integrate(sin(x*y),y,0,1)` yields a function of x, because integration only eliminates the integration variable y. Note that the operator can also handle analytic functions, which you define under **Definitions** in the current component.
- It is possible to use a coordinate name as the integration variable in the `integrate` operator. Note, however, that this will not change the evaluation point where the first argument is evaluated. For example, if u is a dependent variable, `integrate(u,x,a,b)` is equivalent to `u*integrate(1,x,a,b)`.
- To evaluate an integral over a geometrical curve, the `integrate` operator can be combined with one of the *spatial at* operators. For example, in a 2D model, `integrate(comp1.at2(x,y,u),x,a,b)` will integrate u along the line segment with endpoints (a, y) and (b, y).

ISINF AND ISNAN

- The `isinf` operator returns 1 if the expression that it operates on evaluates to infinity (or minus infinity); otherwise it returns 0.
- The `isnan` operator returns 1 if the expression that it operates on evaluates to NaN (not-a-number); otherwise it returns 0.

ISLINEAR

- The `islinear` operator returns 1 if the expression that it operates on is a linear function of the solution; otherwise it returns 0.
- Use this operator to check user-defined expressions for linearity with respect to the solution. The stationary solver does this automatically to choose between a linear or a nonlinear solver.

JACDEPENDS

- The `jacdepends`(*`expr`*) operator returns 1 if the derivative of the expression *`expr`*, with respect to any part of the solution, depends on the solution; otherwise it returns 0.
- `jacdepends`(*`expr`*, *`var`*) returns 1 if the derivative of the expression *`expr`*, with respect to any part of the solution, depends on *`var`*; otherwise it returns 0.

LINDEV

The `lindev` operator evaluates its argument in the following way when the solution has a stored linearization point: The expression is first linearized at the linearization point and then evaluated at the current solution. In particular, if `f` depends linearly on the solution, `lindev(f)` is the same as `f`. If `f` does not depend on the solution, `lindev(f)` is 0. If the solution does not have a stored linearization point, `lindev` linearizes around zero.

LINPER

The `linper` operator has one single use: To indicate load terms that should be used by stationary solvers setting **Linearity** to **Linear perturbation** in the **Settings** window for **Stationary Solver**. Terms not enclosed by `linper` are ignored by such solvers. However, terms inside `linper` are ignored by all other solvers.

LINPOINT

The `linpoint` operator can access the linearization point in a solution with a stored linearization point. If the solution does not have a stored linearization point, using `linpoint` causes an error message.

LINSOL

The `linsol` operator evaluates an expression using the standard solution. This is the default, so in most contexts the operator is not very useful. However, it can, for example, be used inside the argument of `linpoint` to evaluate a part of the expression with the standard solution instead of the linearization point.

LINTOTAL

The `lintotal` operator can access the sum of the linearization point and the linear perturbation in a solution with a stored linearization point. If the solution does not have a stored linearization point, using `lintotal` causes an error message.

LINTOTALAVG

The `lintotalavg` operator evaluates the average of an expression over all phases. `lintotalavg(f)` is evaluated by taking the average of `lintotal(f)` with the solution (but not the linearization point) multiplied by $e^{i\varphi}$ for a number of phases φ. The number of phases is automatically selected to achieve an accurate value. `lintotalavg(f,n)` uses `n` equidistantly spaced phases.

LINTOTALPEAK

The `lintotalpeak` operator evaluates the maximum of an expression over all phases. `lintotalpeak(f)` is evaluated by taking the maximum of `real(lintotal(f))` with the solution (but not the linearization point) multiplied by $e^{i\varphi}$ for a number of phases φ. The number of phases is automatically selected to achieve an accurate value. `lintotalpeak(f,n)` uses `n` equidistantly spaced phases.

LINTOTALRMS

The `lintotalrms` operator evaluates the RMS of an expression over all phases. `lintotalrms(f)` is the same as `sqrt(lintotalavg(abs(f)^2))`.

LINZERO

The `linzero` operator evaluates an expression using a zero solution. This is mostly used internally in the definitions of some other operators.

MEAN

- The `mean` operator computes the mean value of an expression as evaluated on adjacent boundaries, for example.
- The COMSOL Multiphysics software can evaluate expressions on entities of different dimensions and this might affect the result. For instance, a point can lie on an edge, which can be an edge of a square, which can be part of the boundary of a cube. If you want to access the numbering of the entity, it is obvious that you get different results for the point, edge, square, and cube. If you want to know the value of the dependent variable, the behavior should be the same if you think of the point as part of a point, edge, square, or cube.
- The `mean` operator can be called on any entity that has a lower dimension than the model. The dimension of the entity from where the call is made is called `n`.
- The `mean` operator determines the smallest integer `m>n` for which there are adjacent entities of dimension `m`. It then evaluates the expression at the point one time for each `m` dimensional adjacent entity, regarding the point as a point in the entity, and takes the average of the calculated values.

See also up and down and side for similar operators.

NIF

- The `nif(`*`cond1`*`,`*`expr1`*`,...,`*`condn`*`,`*`exprn`*`,`*`exprn+1`*`)` operator implements a nested conditional expression. It can be transcribed as "if *`cond1`*, then *`expr1`*, else if ..., else if *`condn`*, then *`exprn`*, else *`exprn+1`*".
- The `nif` operator can have any odd number of arguments greater than or equal to 3.
- *`cond`* is considered true if nonzero.
- `nif(`*`cond1`*`,`*`expr1`*`,`*`expr2`*`)=if(`*`cond1`*`,`*`expr1`*`,`*`expr2`*`)`

See also if.

NOJAC

- The `nojac` operator makes sure that any expression that it operates on is excluded from the Jacobian computation (it prevents all symbolic differentiation). This is useful if a Jacobian contribution is not strictly necessary and the computational requirements for it are high, such as when using a nonlocal coupling. The use of the `nojac` operator can then significantly lower the memory requirements by avoiding fill-in of the Jacobian matrix, but its use might also slow down the convergence of the solution.
- The k-ε turbulence model is an example where a built-in use of the `nojac` operator improves performance.

PPR AND PPRINT

- When the `ppr` operator is applied on an expression, the COMSOL Multiphysics software uses *polynomial-preserving recovery* to evaluate all variables in the expression that are discretized using Lagrange shape functions.

For example, if `e = ux + vy`, then `ppr(e^2)=(ppr(ux)+ppr(vy))^2`. For other shape function types, the operator has no effect.

	Polynomial-Preserving Derivative Recovery

- The `pprint` operator similarly applies polynomial-preserving recovery within each group of domains with equal settings. Use these operators to get an estimate of the discretization error in the gradient. For example, `ux-pprint(ux)` in a 1D model.

	If these operators are applied on expressions that are used when solving the model, COMSOL Multiphysics computes the Jacobian approximately by ignoring the operator. For example, the Jacobian of `ux-pprint(ux)` is 0.

PREV

When the time discrete solver is used, it stores the solution at a number of previous time steps.

- The expression `prev(`*`expr`*`,`*i*`)` evaluates *`expr`* using the solution obtained i time steps before the current time step.
- The operator can be used in equations as well as for results evaluation.
- When used in equations, the `prev` operator makes it possible to discretize time derivatives. For example, to discretize `ut` (the time derivative of u) with the formula known as the *backward Euler method*, use the expression `(u-prev(u,1))/`*`timestep`*. Here, **`timestep`** is the size of the time step used to reach the current solution `u`. The `prev` operator is also applicable for *`timestep`*. For example, `prev(`*`timestep`*`,1)` is the size of the time step used to reach the solution at the previous time step.
- When using the `prev` operator, sufficiently many previous time steps must be stored. Specify the number of previous time steps to store in the time discrete solver (time discrete levels) in the **Number of time discrete levels** field in the **General** section of the **Settings** window for **Time Discrete Solver**. Evaluating an expression at a previous time step that has not been stored results in an error.

REACF

The reaction force operator (`reacf`) evaluates the reaction force at each node point where a constraint is applied. The reaction force at a node is equal to the corresponding component of the reverse residual vector $-L$ computed while solving the model. The reaction forces are stored together with the solution vector by the solvers.

	You can only use the `reacf` operator during postprocessing; it is not supported for variables solved for during the solution process.

- The reaction force operator (`reacf`) is useful when calculating integrals of reaction forces or fluxes.
- Apply the `reacf` operator on the names of dependent variables when doing a surface integration. For example, in structural mechanics, with dependent variables u and v corresponding to x- and y-displacements, use `reacf(u)` and `reacf(v)` to access integrals of the reaction forces in the x and y directions. The integration for the reaction force is a summation over the nodes, so the integration method must be summation rather than integration. The automatic integration method in the integrations available under **Results>Derived Values** detects the use of the `reacf` operation and then uses the summation method.
- If you integrate the reaction force separately over two adjacent constrained boundaries, the sum of the two results is in general not equal to what you get if you perform the integration over both boundaries in one operation.

The nodes that are shared between the two boundaries are included in both integrations. Another way of stating this is that the reaction force in a node has contributions from all elements attached to the node, so there is some influence also from the closest elements on a neighboring boundary. This discrepancy decreases if you refine the mesh because the reaction force on a node is proportional to the element size. See also Computing Accurate Fluxes.

- Storing of the reaction forces can be disabled by clearing the **Reaction forces** check box in the **Output** section in the solver's **Settings** window. This saves some computational time and memory. It is then not possible to use the reaction force operator.
- You can call `reacf` with an optional second argument. The second argument is the dimension of the entity where the reaction force should be evaluated. The dimension is assumed to be at least equal to the dimension from where the call to `reacf` is made. This is different from `reacf(u)` only in the case when u is not defined on the entity where the operator is evaluated but only on adjacent entities of higher dimension.
- It is also possible to call `reacf` with an optional third argument. This is a factor that the COMSOL Multiphysics software multiplies `reacf(u,dim)` by. The third argument is evaluated on each adjacent entity of dimension `dim` and multiplied by the reaction forces on that entity.
- When using weak constraints, the residual vector is always 0, so reaction forces are not available.

REALDOT

- The expression `realdot(a,b)` treats complex numbers a and b as if they were real-valued vectors of length 2 and returns their dot product. Also think of the operator call as a shorthand form of `real(a*conj(b))`. This expression, however, is not an analytical function of its complex arguments and therefore has no unique partial derivatives with respect to a and b.
- The difference between `realdot(a,b)` and `real(a*conj(b))` is that the partial derivatives of the former with respect to a and b are defined as $\mathrm{conj}(b)$ and $\mathrm{conj}(a)$, respectively, while for the latter expression, the partial derivatives are $\mathrm{real}(b)$ and $\mathrm{real}(a)$.

	The difference between the partial derivative definitions is important during sensitivity analysis of frequency-response problems (scalar or vector Helmholtz equations).

- Common objective function quantities like power and energy must be redefined in terms of `realdot(a,b)` rather than `real(a*conj(b))` for the sensitivity solver to compute correct derivatives. This applies also to the absolute value, `abs(a)`, via the definition $|a|^2 = \mathrm{realdot}(a, a)$.
- The `realdot` function is nonanalytic, and it is therefore not possible to express and evaluate the Jacobian of that function correctly when a complex-valued solution vector is represented in terms of single complex-valued degrees of freedom. For that reason, the `realdot` operator, by default, results in Jacobian contributions during assembling only when the **Split complex variables in real and imaginary parts** settings in the **Compile Equations** node for the Study is active. The default behavior of Jacobian contributions is possible to override by providing an optional third argument to realdot:

  ```
  realdot(a,b,jaclevel)
  ```

  The `jaclevel` argument controls Jacobian contributions of the `realdot(a,b)` operator and can have the following values:

  - −1: (default) Jacobian contributions in the assembling only if splitting of complex variables in real and imaginary part is active for the Study.
  - 0: no Jacobian contributions
  - 1: always Jacobian contributions

RESIDUAL

- To access the latest assembled residual, use the `residual` operator. For example, you can plot `residual(spf.U)` to get a plot of the latest residual of the velocity U in a fluid-flow simulation. The residual can provide insight into convergence issues by showing the locations where the algebraic residual is large.
- The computation of the residual uses an update scheme where, in each iteration, the solver computes the residual, updates the stored residual vector, and then computes the Jacobians.
- To make the residual available in the simulation output (for plotting, for example), specify that the solver stores it both while solving and in the output by selecting **While solving and in output** from the **Store last residual** list in the **Advanced** solver node's **Settings** window.
- For interpolated output (the **Times to store** list set to **Specified values**), no data is stored for the residual (NaN).

The algebraic residual data only makes sense for actual time steps taken by the solver. For interpolated output, which is the default, the COMSOL Multiphysics software does not store any values for the residual; you therefore get an empty plot for the interpolated times. There are two ways in which you can study the residual for time-dependent problem (assuming you have set **Store last residual** to **While solving and in output**):

- Change the **Update at** setting for plot while solving to **Times steps taken by solver** and select a plot that is using the `residual` operator.
- Change the **Times to store** setting for the **Time-Dependent Solver** node, under the **Output** section, to **Steps taken by solver**. This approach also makes the residual available for postprocessing.

SENS

- When the forward sensitivity operator (`sens` operator) is applied to an expression, COMSOL Multiphysics uses the forward sensitivity solution with respect to the indicated control variable instead of the primal solution for the evaluation. This means, in practice, that when the first argument is a linear expression in the dependent variables, the operator returns its derivative with respect to the control variable given as second argument. The result for a nonlinear expression usually lacks meaning.
- The forward sensitivity solution is available for analysis when the sensitivity solver has been used with the forward sensitivity method, and for the dependent variables and control variables that have been solved for.
- For scalar control variables, access the corresponding forward sensitivity solution by giving the control variable name as the second argument to this operator. For example, with the dependent variable u and the scalar control parameter q, access the forward sensitivity solution $\partial u/\partial q$ as `sens(u,q)`.
- For a control variable field, which is not a scalar, a more elaborate syntax specifying a unique degree of freedom must be used. This is done by giving an integer as the second argument, corresponding to the global degree of freedom number for the requested control variable degree of freedom. The degree of freedom index for the sensitivity parameter must be a number greater than or equal to 1.

SETCONST

Use the operator `setconst` to define temporary constants while the second argument of the `withsol` operator (see withsol) is evaluated. For example, `withsol('sol1',expr,setconst(a,3))` defines the variable `a` to have the value 3 while `expr` is evaluated. The `setconst` operator can be combined with `setind` or `setval` (see below) and does not affect the solution that is selected for evaluation.

You can use `setconst` with more than two arguments to make the syntax more compact. For example, `withsol('sol1',expr,setconst(a,3,b,4))` is equivalent to `withsol('sol1',expr,setconst(a,3),setconst(b,4))`.

SETIND AND SETVAL

Use `setind` to specify a parameter index and `setval` to specify a parameter value in connection with the `withsol` operator (see withsol). For parametric sweeps over several parameters, say `p` and `q`, `setval` and `setind` can be used in any combination for the two parameters — for example, `withsol('sol1',expr,setind(p,2,q,3))` or `withsol('sol1',expr,setind(p,2),setval(q,5))`.

Negative indices in `setind` are counted from the end. For example, in a time-dependent solver, `withsol('sol1',expr,setind(t,-2))` evaluates `expr` at the second last time step. An alternative notation for the first and last indices is `setind(p,'first')` and `setind(p,'last')`.

You can use `setind` and `setval` with more than two arguments to make the syntax more compact. For example, `withsol('sol1',expr,setval(p,1,q,2))` is equivalent to `withsol('sol1',expr,setval(p,1),setval(q,2))`.

SHAPEORDER

- The expression `shapeorder(`u`)` gives the element order used for discretization of the variable u.
- The argument u must be a dependent variable or a partial derivative of a dependent variable. In the latter case, the order returned is the order of the dependent variable itself and not the order of its derivative.
- It is an error to apply the `shapeorder` operator to, for example, an expression, a constant, or a spatial coordinate.

SIDE

- The `side` operator evaluates an expression as defined in the adjacent entity.
- The COMSOL Multiphysics software can evaluate expressions on entities of different dimensions and this might not affect the result. For instance, a point can lie on an edge, which can be an edge of a square, which can be part of the boundary of a cube. If you now want to access the numbering of the entity it is obvious that you should get different results for the point, edge, square, and cube. If you want to know the value of the dependent variable, this behavior should be the same if you think of the point as part of a point, edge, square, or cube.
- The `side` operator can be called on an entity that has lower dimension than the model. The dimension of the entity from where the call is made is called `n`.
- The `side` operator is an operator that evaluates an expression, not on the entity where it is called but instead on one of the adjacent entities of dimension `n+1`. You choose which entity by giving its number (this is the number displayed, for instance, in the selection fields) as the first argument to the operator.
- It can happen that the entity you choose is adjacent to the evaluation point more than once. For instance, a boundary can have the same domain on both sides. In such cases the `side` operator takes the average of the different values.

See also up and down and mean for similar operators.

SPATIAL AT

The operator evaluates an expression *`expr`* in a specific point in space. Typically, use `at`*`i`* without extra arguments when evaluating inside a mesh and add extra arguments when evaluating outside the mesh or even outside the geometry.

- The *`scope`*`.at`*`i`*`(`*`<coordinate expressions>`*`, `*`expr`*`)` operator evaluates the expression *`expr`* in the geometry with the given scope (typically `comp1` for Component 1 or a similar scope for another Component branch) on an i-dimensional entity in the point given by the coordinate expressions (`at0` for a 0-dimensional entity, `at1` for a 1-dimensional entity, `at2` for a 2-dimensional entity, and `at3` for a 3-dimensional entity). For example, `comp1.at1(0,y,dom)` evaluates `dom` in the two-dimensional geometry on an edge in the point $(0, y)$. To use a certain `at`*`i`* operator variant, there must be a meshed geometric entity of the right dimension at the coordinates where it is evaluated; for example, `at0` only works if the source geometry has a vertex in the point where you

want to evaluate the expression. The number of arguments for the *scope*.at*i* operator is equal to the space dimension in the source component (the coordinate expressions) plus one (the expression to evaluate).

- For two- and three-dimensional models, the evaluation on the domain level (that is, `at2` for two-dimensional models and `at3` for three-dimensional models) can take an extra argument `'evaltype'`. The supported `'evaltype'` values are `'mi'` and `'minc'`. Contrary to regular `ati` evaluations, these evaluation types do not require any domain meshes and can be evaluated in any given point. However, if there are two adjacent domains for which something is defined differently, the operator requires that the boundary between the domains is meshed. The `'mi'` (mesh-independent evaluation) value checks that you have meshed all such required boundaries (even for variables that have nothing to do with the actual argument of the operator), whereas the `'minc'` (mesh-independent no-check evaluation) value do not, and it might therefore give inaccurate results if not used correctly.
- To all operators you can add a suffix ("_frameId") that specifies the frame in which the coordinate expressions are used — for example, `at1_spatial`(x,y, *expr*). Without a suffix, the evaluation is performed in the material frame.

STDDEV

The `stddev` operator takes another operator as its first argument (as a string), followed by the arguments for the operator, to compute the (population) standard deviation. For example, for an integration operator `intop1` defined in the component `comp1`, the `stddev` operator computes the following:

```
stddev(('comp1.intop1',X) = sqrt(comp1.intop1((X-comp1.intop1(X)/comp1.intop1(1))^2)/
comp1.intop1(1))
```

In addition to calls to user-defined integration and summation operators, you can use the following built-in operators as the first argument (a string) to `stddev`: `integrate`, `circint`, `diskint`, `sphint`, `ballint`, and `timeint`. The following example shows a call to `stddev` using the `integrate` operator:

```
stddev('integrate',x*sin( x ),x,-1,1)
```

SUBST

- The `subst` operator takes a variable or expression as its first argument, followed by one or more argument pairs, each consisting of a variable name and an expression. The first argument in each pair is an original variable that appears in the variable or expression that you specify as the first argument, and the second argument in each pair is the variable or expression that you want to substitute the original variable with. This can be useful, for example, for replacing the variable for temperature in a temperature-dependent expression for some quantity by a fixed initial temperature for use as an initial condition.
- As an example, the expression `subst(hmnf.nutildeinit,p,pin_stat)` (taken from the Sajben Diffuser model in the CFD Module's application library) substitutes the dependent variable for pressure, `p`, with a user-defined variable `pin_stat` for the inlet static pressure. The evaluation of the variable `hmnf.nutildeinit` (for the undamped turbulent kinematic viscosity) then takes the value of `pin_stat` instead of `p`.
- The unit of the output from the `subst` operator is the same as the unit for its first input argument.

SUM

The `sum` operator, when used as `sum(`*expr*`, `*index*`, `*lower*`, `*upper*`)`, is a summation operator that computes the sum of the terms *expr* for all *index* values from *lower* to *upper*. The expressions for lower and upper limits are required to evaluate to real values and to be independent of the evaluation point. For example, `sum(i^2,i,1,4)` = $1^2+2^2+3^2+4^2 = 30$.

TEST

The `test` operator is available for modeling using the weak formulation of the equations. This operator creates the test function for the variable that it operates on. For example, write `ux*test(u)` to represent u_x times the test function of u.

TIMEINT AND TIMEAVG

- The `timeint` and `timeavg` operators integrate and compute the average of a time-dependent expression over a time interval, respectively. `timeint(t1,t2,`*`expr`*`)` and `timeavg(t1,t2,`*`expr`*`)`compute the integral and average of *`expr`* over the interval `t=t1` to `t=t2`, respectively. The first two arguments must be real scalars. The integral is computed by numerical integration, subdividing the interval until the required accuracy is reached. The `timeavg` operator numerically integrates the expression in the same way as `timeint` and then divides the result by `t2-t1`.
- `timeint(t1,t2,`*`expr`*`,`*`tol`*`)` and `timeavg(t1,t2,`*`expr`*`,`*`tol`*`)` set the relative tolerance in the numerical integration procedure to *`tol`*. The tolerance must be a positive real constant. The default tolerance (used when the fourth argument is omitted) is `1e-8`.
- `timeint(t1,t2,`*`expr`*`,`*`tol`*`,`*`minlen`*`)` and `timeavg(t1,t2,`*`expr`*`,`*`tol`*`,`*`minlen`*`)` set the smallest length of the subintervals used in numerical integration as a fraction of the length of the whole integration interval. Subintervals smaller than this length are not further subdivided even if that means that the required accuracy is not reached. *`minlen`* must be a positive real constant. The default value of *`minlen`* (used when the last argument is omitted) is `1e-4`.
- `timeint(t1,t2,`*`expr`*`,'nointerp')` and `timeavg(t1,t2,`*`expr`*`,'nointerp')` evaluate the time integral without doing any interpolation between the stored time steps. This variant might be less accurate but faster and more robust.
- The `timeint` and `timeavg` operators can only be used during results evaluation, so you cannot use them when setting up the model.

TIMEMAX AND TIMEMIN

- The `timemax` and `timemin` operators evaluate the maximum and minimum, respectively, of an expression over time. `timemax(t1,t2,expr)` finds the maximum of `expr` on the interval $t_1 \le t \le t_2$. The first two arguments must be real constants.
- `timemax(t1,t2,expr,'nointerp')` and `timemin(t1,t2,expr,'nointerp')` evaluate the maximum or minimum without doing any interpolation between the stored time steps. This variant might be less accurate but faster and more robust.
- The `timemax` and `timemin` operators can only be used during results evaluation, so you cannot use then when setting up the model. See attimemax and attimemin for similar operators.

TREATASCONST

When deciding if a linear solver can be used, the `treatasconst(`*`expr`*`)` operator treats *`expr`* as independent of the solution (even if this is actually not the case).

TRY_CATCH

- The `try_catch(`*`tryExpr`*`,`*`catchExpr`*`)` operator attempts to evaluate the expression *`tryExpr`*, but if this fails for any point, the operator evaluates *`catchExpr`* instead.
- Note that the result might depend on how the mesh elements are partitioned into blocks during evaluation, which can be rather arbitrary. As soon as evaluation of the first argument fails in some part of the block, the second argument gets evaluated in the entire block. Also, during postprocessing the behavior might change

because NaN (Not-a-Number) values in a subset of the evaluation points are then accepted, so then the second argument's expression might not be evaluated even at points where the first argument fails.

- Consider using the `if` operator (see if) with a suitable condition as the first argument instead of the `try_catch` operator, if the `if` operator is applicable.

UP AND DOWN

- The COMSOL Multiphysics software can evaluate expressions on both sides of a boundary. One way to do this is by using the `up` and `down` operators. These operators are available only on boundaries (that is, geometric entities of dimension one less than the dimension of the model).
- For an expression or a variable that is discontinuous across a boundary, the value is different on either side, and COMSOL Multiphysics normally displays the mean values on the boundary.
- Use the `up` and `down` operators to evaluate an expression on the upside or downside of the boundary. If the upside or downside is outside of the geometry, or if the variables in the expression are not active on that side, the `up` or `down` operator returns 0.

For more information about the upside and downside of a boundary, see Tangent and Normal Variables. See also side and mean for similar operators.

VAR

- The `var` operator (variation operator) is available for modeling using the weak formulation of the equations.
- The `var` operator has the same function as the `test` operator but is limited to the specified set of fields.
- This operator creates the test function for the variable that it operates on. For an expression, such as $\mathrm{var}(F(u, \nabla u, v, \nabla v), a)$, where the dependent variable u is in the field named a and the dependent variable v is not, the `var` operator is equivalent to:

$$\sum_i \mathrm{test}(u_i)\frac{\partial}{\partial u_i}F(u_i, \nabla u_i, v_i, \nabla v_i) + \mathrm{test}(\nabla u_i)\frac{\partial}{\partial \nabla u_i}F(u_i, \nabla u_i, v_i, \nabla v_i)$$

  for all dependent variables u_i.

WITH

- The `with` operator can access specific solutions during results evaluation.
- For time-dependent problems, parametric problems, and eigenvalue problems, this makes it possible to use the solution at any of the time steps, any parameter value, or any eigensolution in an expression used for plotting or data evaluation. To evaluate a sum (average) of displacement for the first six eigenmodes above the rigid-body modes in a 3D solid mechanics model, for example, use `sum(with(m,(1/(m+1))*solid.disp),m,7,12)`, where `m` is the summation index, summing the displacements, divided by `m+1` to form the average, from eigenmode 7 to eigenmode 12.
- Use the solution number as the first input argument. The second input argument is the expression that you want to evaluate using this solution. For example, `with(3,u^2)` provides the square of the third eigensolution for an eigenvalue problem.
- You can also use `'first'` or `'last'` as the first argument to evaluate an expression at the first or last time of the simulation, respectively.
- For example, you can use the `with` operator to verify that two eigensolutions are orthogonal or to compare two solutions at different time steps or parameter values.
- If you want to use the `with` operator for a parametric problem, you should use a Parametric solver instead of a Parametric Sweep.
- The `with` operator can only be used during results evaluation, so you cannot use it when setting up the model.

See also withsol for a more general operator.

WITHSOL

The `withsol` operator can access the solution from any solver sequence in the current model. It can be used as soon as the solution has been computed. The first argument is the tag of the solver sequence, and the second argument is an expression to evaluate using that solution. Additional arguments can be added to specify the time step, eigenvalue, or parameter value. See also setind and setval.

The `withsol` operator is similar to the `with` and `at` operators but is more general because it can access any solution in the current model.

You can use `'current'` as the solver sequence tag if you do not want to change from the current solver sequence. When changing solutions in outer sweeps the `'current'` tag option is not supported. Therefore it is recommended to use the correct solver sequence tag when possible.

Examples:

- `withsol('sol1',expr)` evaluates `expr` using the solution from the solver sequence with tag `sol1`.
- For a time-dependent solver, `withsol('sol1',expr)` evaluates at the last stored time step in the solution. Other time steps can be specified by using the `setind` or `setval` operators as additional arguments. For example, `withsol('sol1',expr,setval(t,0.5))` evaluates at the time step $t = 0.5$ (using interpolation between stored time steps if necessary), and `withsol('sol1',expr,setind(t,3))` evaluates at the third stored time step.
- For an eigenvalue solver, `withsol('sol1',expr)` evaluates at the first eigenvalue. Other eigenvalues can be specified using the `setind` operator as an additional argument. For example, `withsol('sol1',expr,setind(lambda,2))` evaluates at the second eigenvalue. (The `setval` operator can also be used with eigenvalues, but this is not very useful because the exact eigenvalues must then be known.)
- For a parametric sweep over a parameter `p`, `withsol('sol1', expr)` evaluates at the last parameter value. You can specify other parameter values using the `setind` or `setval` operators as additional arguments. For example, `withsol('sol1',expr,setval(p,4))` evaluates with the parameter value `p` = 4. `withsol('sol1',expr,setind(p,2))` evaluates for the second value of parameter `p`.
- To access a load case, use `setval`. For example: `withsol('sol2',truss.Sn,setval(loadcase,1))`.

Predefined and Built-In Variables

This section provides information about available predefined and built-in variables that represent properties of the physics, geometry, mesh, and other parts of the model, including some tips on how you can use them in models.

Predefined Physics Variables

Physics variables are predefined variables that the physics interfaces introduce. They are typically functions of the dependent variables and their derivatives. Many of these variables are available in the **Predefined quantities** lists in the settings for plots and other results nodes.

To access physics variables, use a variable scoping syntax that uses the **Name** to indicate the physics that they belong to.

	The **Equation View** subnode is available for all physics nodes and contains a table with the names, expressions, units, and descriptions for the physics variables that the node defines. To display the **Equation View** subnodes, click the **Show More Options** button ( ) and select **Equation View** in the **Show More Options** dialog box.

Variable Naming Convention and Namespace

COMSOL Multiphysics uses a namespace with a hierarchical structure to control the access to variables within a model component and variables in other components within the same model. To access variables, use the following namespace syntax:

- To refer to the top level of the model tree, use `root`.
- To refer to variables in a Component branch, use its component name, such as `comp1`.
- To refer to variables in a physics interface, use its name such as `solid`.
- To refer to material properties, use the material node's name, such as `mat1`, and the name of the property group for the material property group, which is typically `def` for the Basic property group. For example, to access the density ρ in Material 1 use `mat1.def.rho` (or, using the full name for Component 1, `root.comp1.mat1.def.rho`; see below). Use this pattern when referencing other material properties too.
- The COMSOL Multiphysics software evaluates the physics variables in the model component's namespace, so you need to prepend the Name to access these variables. For example, `solid.disp` refers to the total displacement in a Solid Mechanics interface with the name `solid`.
- The dependent variables (field variables) are unique within a model, and you do not need the Name to access them. For example, enter `T` to access the temperature in a Heat Transfer interface using the default name for the temperature.
- When referring to a variable you only need to provide the part of the full name that makes the variable unique. For example, within a Solid Mechanics interface `solid` in Component 1 `comp1`, it is sufficient to type `solid.disp`, but `comp1.solid.disp` and the full name `root.comp1.solid.disp` are also correct. To access the same variable from another Component or from a Study, use `comp1.solid.disp` or `root.comp1.solid.disp`. The same mechanism applies to variables defined within a component. To access a global parameter `param1`, you can use `param1` directly or `root.param1`.

These variable naming conventions mean that the syntax becomes shorter when defining variables locally in a Component branch instead of globally. For example, to access the x-component of the electric field, E_x, in an

Electrostatics interface with the name `es` in a Component 1 with the name `comp1`, you can use `es.Ex` in a variable defined in Component 1, but for a variable defined globally, the syntax is `comp1.es.Ex`.

Variable Classification and Geometric Scope

COMSOL Multiphysics provides a set of variables that you can use in expressions when specifying a model and for visualizing and analyzing the solution. A number of variables are common to all physics interfaces in a Component, for example, the spatial coordinate variables x, y, and z (for 3D and planar 1D and 2D geometries).

Every physics interface also has its own set of variables to represent quantities relevant to the physics or equations that it covers. Characteristics of variables include:

- Parameters and geometric variables are always available.
- The choice of physics interfaces and the dimension of the geometries in the model affect the set of available field variables and special variables.
- Equations can be active in different domains, which also affects the set of available variables. Variables corresponding to certain equation terms are available only in the particular part of the geometry (such as domains, boundaries, or points) where the equation is active.
- Variables defined on boundaries, edges, and points are active if the adjacent domain is active.

Variables are divided into the following general categories:

- User-defined (local) *variables*
- Built-In Global Variables
- Physical Constants (predefined universal constants)
- Geometric Variables, Mesh Variables, and Variables Created by Frames (variables that characterize geometric properties).
- *Field variables* (dependent variables and variables derived from them). For example, Shape Function Variables and Predefined Physics Variables.
- Nonlocal Couplings and Coupling Operators
- Solver Variables (available only during the solution process)

Built-In Global Variables

The following variables represent time (`t`), frequency (`freq`), eigenvalue (`lambda`), phase angle (`phase`), and the number of degrees of freedom (`numberofdofs`).

THE TIME VARIABLE

- For time-dependent problems, use the time variable (`t`) with the unit seconds (s).
- It can be part of any expression in the point, edge, boundary, and domain settings, as well as during analysis.
- It is always scalar, even when the solution contains more than one output time.
- The value of `t` for results evaluation corresponds to the selection made in the **Time** list in the **Data** sections for the visualization and data evaluation nodes in the **Results** branch in the **Model Builder**. See the Results Analysis and Plots section.
- When computing derivatives with respect to time, you must use the mesh time symbol `TIME` instead of `t`, or use one of the frame-specific time derivative operators, *`frame`*`.dt(`*`expr`*`)`, that automatically add convective terms derived from the mesh motion. For example, the time derivative of a temperature field `T` computed with respect

to fixed points in the mesh is `d(T,TIME)` or equivalently `mesh.dt(T)`. The corresponding time derivative for a fixed point in the spatial frame is `spatial.dt(T)`.

- The `TIME` symbol is not a variable in the usual sense. It cannot be evaluated, but it is equal to the time `t` in the sense that `d(t,TIME)` is equal to 1.

THE FREQUENCY VARIABLE

The frequency variable (`freq`) is the global frequency for models in the frequency domain (time-harmonic models and frequency response analysis, for example).

THE EIGENVALUE VARIABLE

- When specifying an eigenvalue problem, use the eigenvalue variable (`lambda`) like any other variable.
- The eigenvalue solver extracts the Jacobian, the damping matrix, and the mass matrix through Taylor expansion of the problem with respect to the eigenvalue variable around a specified eigenvalue linearization point (which is zero by default).
- Other solvers treat the eigenvalue variable as a constant with value zero, unless it is set by an eigenvalue solution used as initial solution.
- After solving an eigenvalue problem, the eigenvalue name is available as a scalar variable for use in expressions.
- To choose between different eigenvalues, select one from the **Eigenvalue** list in the **Data** sections for the visualization and data evaluation nodes in the **Results** section of the **Model Builder**. The value of the eigenvalue variable corresponds to the selection made in the **Eigenvalue** list. See the Results Analysis and Plots section.
- For many physics interfaces, the default is to use an eigenfrequency study and compute and display the eigenfrequencies rather than the eigenvalues.

THE PHASE ANGLE VARIABLE

The phase angle variable (`phase`) is the phase angle (in radians), primarily for postprocessing of models in the frequency domain, and you can specify its value in the **Settings** window for a dataset, using the **Solution at angle (phase)** field. The default value is 0.

By default, the COMSOL Multiphysics software plots the real part of complex-valued data. You can use the `imag` function to plot the imaginary part and the `abs` function to plot the absolute value (modulus) of complex-valued data.

THE NUMBER OF DEGREES OF FREEDOM VARIABLE

The variable `numberofdofs` returns the total number of degrees of freedom (DOFs), which is the number of DOFs solved for plus any internal DOFs that the solver might add. The number of DOFs solved for plus the number of internal DOFs are reported in the **Messages** window when you compute the solution. COMSOL Multiphysics sometimes uses internal DOFs for storing information during solution that would be expensive or impossible to recompute afterward. Internal DOFs have no equations and therefore do not make the system matrices larger.

These variables are built-in variables with reserved variable names. If you use a parameter called `t`, for example, COMSOL Multiphysics uses it for a stationary study, but the time-dependent solver overrides it with the value of `t` from the solver. Any variable or parameter using one of these names can be overridden during solution or postprocessing. Avoid using these reserved variable names for user-defined parameters and variables, unless you are aware of how they are handled in COMSOL Multiphysics.

Geometric Variables, Mesh Variables, and Variables Created by Frames

The variables that characterize geometric properties and the mesh are listed in Table 5-9, with detailed descriptions for some of the variables following the table.

TABLE 5-9: GEOMETRIC VARIABLES AND MESH VARIABLES

VARIABLE	DESCRIPTION
`curv` `curv1,curv2`	The curvature of a boundary in 2D is called `curv`. A boundary in 3D has two principal curvatures corresponding to the minimal and maximal normal curvatures. They are called `curv1` and `curv2`, respectively. See Curvature Variables for details.
`dGeomChar`	The diagonal size of a bounding box containing all of the geometry.
`dnx, dny, dnz, dnxmesh, dnymesh, dnzmesh`	Normal vector components pointing towards the upside of a boundary. SeeDirection of the Normal Component on Interior Boundaries.
`dom`	The domain number, the boundary number, the edge number, or the vertex (point) number (all are integer values). The variable `sd` also exists as an alias but is considered obsolete.
`dvol`	The volume scale factor variable, `dvol`, is the determinant of the Jacobian matrix for the mapping from local (element) coordinates to global coordinates. For 3D domains, this is the factor that the software multiplies volumes by when moving from local coordinates to global coordinates. On surfaces in 3D and domains in 2D, it is an area scaling factor. On edges in 3D and 2D, and in 1D domains, it is a length scaling factor. In points of all dimensions, `dvol` is always equal to 1 by definition. If a moving mesh is used, `dvol` is the mesh element scale factor for the material frame mesh. The corresponding factor for the spatial mesh is named `dvol_spatial`. Similarly for geometry frame and mesh frame, the factors are named `dvol_geometry` and `dvol_mesh`, respectively.
`emetric2`	Squared norm of the element metric `emetric(`*`vector`*`)`. See emetric for details.
`geomapproxdist`	Indicate, for each element, how far a node point in each element was moved from the geometry. See Avoiding Inverted Mesh Elements for more information.
`h`	Available on all geometric entities, the variable `h` represents the mesh element size in the material/reference frame (that is, the length of the longest edge of the element).
`linearizedelem`	In some calculations, COMSOL Multiphysics forces mesh elements to become linear. This variable returns one inside such an element and zero otherwise. Note that the faces of the linearized mesh elements are not considered to be linearized themselves. You can use this variable to identify mesh elements with linearized elements.
`meshtype`	The mesh type index for the mesh element. This is the number of edges in the element.
`meshelement`	The mesh element number.
`meshvol`	Volume of the (linearized) mesh element.
`nx, ny, nz,`	See Normal Variables.
`nxc, nyc, nzc`	Continuous mesh-based normals. See Normal Vector Continuous Variables.
`nxmesh, nymesh, nzmesh`	Mesh-based normals. See Normal Vector Variables Representing Element Surface Normals.
`qualskewness, qualmaxangle, qual, qualvollength, qualcondition, qualgrowth`	Mesh quality measures. See Mesh Element Quality and Size. See also Frame Variables.

TABLE 5-9: GEOMETRIC VARIABLES AND MESH VARIABLES

VARIABLE	DESCRIPTION
`reldetjac` `reldetjacmin`	The determinant of the Jacobian matrix for the mapping from the straight mesh element to the possibly curved element used when solving. Use this variable to measure the difference in shape between a curved element and the corresponding straight element. The variable `reldetjacmin` is a scalar for each element defined as the minimum value of the `reldetjac` variable for the corresponding element. A `reldetjacmin` value less than zero for an element means that the element is wrapped inside-out; that is, the element is an *inverted mesh element*.
`s`, `s1`, `s2`	See Parameterization Variables.
`tcurvx`, `tcurvy` (2D) `tcurv1x`, `tcurv1y`, `tcurv1z`, `tcurv2x`, `tcurv2y`, `tcurv2z` (3D)	Tangential directions for the corresponding curvatures. See Curvature Variables for more information.
`tremetric`	Trace of the element metric `emetric(`*`vector`*`)`. See emetric for details.
`t`*x* and `t`*y* (2D) `t1`*x*, `t1`*y*, `t1`*z* (3D edges and boundaries) `t2`*x*, `t2`*y*, `t2`*z* (3D boundaries)	See Tangent Variables.
`un`*x*, `un`*y*, `un`*z*, `un`*x*`mesh`, `un`*y*`mesh`, `un`*z*`mesh`	Normal vector components pointing towards the downside of a boundary. See Direction of the Normal Component on Interior Boundaries.
`x`, `y`, `z` `r`, `z`	See Spatial Coordinate Variables.
`xi1`, `xi2`, `xi3`	Local (barycentric) coordinates ξ_i in each mesh element; see the section Finite Elements in the Elements and Shape Functions chapter.

When entering the spatial coordinate, parameterization, tangent, and normal geometric variables, replace the letters highlighted below in an *italic font* with the actual names for the dependent variables (solution components) and independent variables (spatial coordinates) for the Component node.

For example, replace u with the names of the dependent variables in the model, and replace x, y, and z with the first, second, and third spatial coordinate variable, respectively. x_i represents the ith spatial coordinate variable. If the model contains a deformed mesh or the displacements control the spatial frame (in solid mechanics, for example), you can replace the symbols x, y, and z with either the spatial coordinates (`x`, `y`, and `z` by default) or the material (reference) coordinates (`X`, `Y`, and `Z` by default).

The variables `curv`, `dvol`, `h`, `qual`, `reldetjac`, and `reldetjacmin` are based on the mesh viewed in the material (reference) frame. If you have a moving mesh, the corresponding variables for the mesh viewed in the spatial frame have a suffix `_spatial` (that is, `curv_spatial`, `dvol_spatial`, and so on). If you use a deformed geometry, the corresponding variables for the original, undeformed geometry have a suffix `_geometry` (for example `dvol_geometry`). After automatic remeshing, variables referring to the current mesh have a suffix `_mesh` (for example, `h_mesh`).

SPATIAL COORDINATE VARIABLES

- The spatial coordinate variables (independent variables) are available for all domain types.
- For a Cartesian geometry the default names for the spatial coordinates are `x`, `y`, and `z` (for the x, y, and z coordinates).
- For axisymmetric geometries the default names for the spatial coordinates are `r`, `phi`, and `z` (for the r, φ, and z coordinates).
- If a deformed mesh is used, x, y, z can be both the *spatial coordinates* (`x`, `y`, `z`) and the *material/reference coordinates* (`X`, `Y`, `Z`); see Mathematical Description of the Mesh Movement.
- If the model includes a deformed mesh, the variables x`TIME`, y`TIME`, and z`TIME` represent the mesh velocity. To access these variables, replace x, y, and z with the names of the spatial coordinates in the model (`x`, `y`, and `z`).
- If the model includes a deformed geometry, the default names for the spatial coordinates in the geometry frame and the mesh frame are `Xg`, `Yg`, and `Zg` (for the x_g, y_g, and z_g coordinates).

	Most physics interfaces are based on a formulation which is either Eulerian or Lagrangian. They therefore lock their dependent variables to the spatial or the material frame, and the spatial derivatives are then defined with respect to x, y, and z (spatial frame) or X, Y, and Z (material frame), when using the default names for the spatial coordinates. See Differentiation in Space.

PARAMETERIZATION VARIABLES

The surface-boundary parameterization variables can be useful for defining distributed loads and constraints such as a parabolic velocity profile. The available parameterization variables are:

	The curve parameter `s` (or `s1`) in 2D. Use a line plot to visualize the range of the parameter, to see if the relationship between x and y (the spatial coordinates) and `s` is nonlinear, and to see if the curve parameterization is aligned with the direction of the corresponding boundary. In most cases it runs from 0 to 1 in the direction indicated by the arrows shown on the edges when in the boundary or edge selection mode and if you have selected the **Show edge direction arrows** check box in the **Settings** window for **View** (xy). You can use `s` on boundaries in 2D when specifying boundary conditions.

	The arc length parameter `s1` available on edges in 3D. It is approximately equivalent to the arc length of the edge. Use a line plot to visualize the values of `s1`. The surface parameters `s1` and `s2` in 3D are available on boundaries (faces). They can be difficult to use because the relationship between x, y, and z (the spatial coordinates) and `s1` and `s2` is nonlinear. Often it is more convenient to use expressions with x, y, and z for specifying distributed boundary conditions. To see the values of `s1` and `s2`, plot them using a surface plot.

TANGENT AND NORMAL VARIABLES

The tangent and normal variables are components of the tangential and normal unit vectors.

Tangent Variables

	In 2D, `t`x and `t`y define the curve tangent vector associated with the direction of the boundary.

	In 3D, the tangent variables `t1`x, `t1`y, and `t1`z are defined on edges. The tangent variables `t1`x, `t1`y, `t1`z, `t2`x, `t2`y, and `t2`z are defined on surfaces according to $$(t_{ix}, t_{iy}, t_{iz}) = k_i\left(\frac{\partial x(s_1, s_2)}{\partial s_i}, \frac{\partial y(s_1, s_2)}{\partial s_i}, \frac{\partial z(s_1, s_2)}{\partial s_i}\right), \quad i = 1, 2$$ These most often define two orthogonal vectors on a surface, but the orthogonality can be ruined by scaling geometry objects. The vectors are normalized; k_i is a normalizing parameter in the expression just given.

If a deformed mesh is used, the tangent variables are available both for the deformed configuration and for the undeformed configuration. In the first case, replace x, y, and z with the spatial coordinate names (`x`, `y`, and `z` by default). In the second case, replace x, y, and z with the material/reference coordinate names (`X`, `Y`, and `Z` by default).

Normal Variables

The variables components `n`x, `n`y and `n`z make up a vector that normally points from the downside towards the upside of a boundary. Boundaries between meshed and unmeshed domains constitute an exception where the normal vector instead points from the meshed domain towards the unmeshed domain. On interior boundaries, which side is up and which side is down is arbitrary, but he void surrounding a geometry is always on the upside, so on boundaries exterior to the geometry, the normal points away from the geometry.

For frame coordinates x, y, z which are identical to the mesh frame coordinates, the normal is evaluated based on the geometry (if a geometry is available). Otherwise the components are evaluated based on the mesh element shapes, and are identical to the corresponding `n`x`mesh`, `n`y`mesh`, `n`z`mesh` variables. See Normal Vector Variables Representing Element Surface Normals. This, for example, happens for the spatial frame normal vector when there are Moving Mesh features or a Solid Mechanics interface in the model

—	In 1D, `n`x is the outward unit normal pointing out from the meshed domain.

	In 2D, `n`x and `n`y define a normal vector pointing outward relative to the meshed domains.

	In 3D, `n`x, `n`y, and `n`z define a normal vector pointing outward relative to the meshed domains.

Direction of the Normal Component on Interior Boundaries

To get control of the direction of the normal component on interior boundaries, the following variables are available:

—	In 1D: • `un`*x*, the outward unit normal seen from the upper domain • `dn`*x*, the outward unit normal seen from the lower domain

	In 2D: • `un`*x* and `un`*y* for the up direction • `dn`*x* and `dn`*y* for the down direction The upside is defined as the left side with respect to the direction of the boundary.

	In 3D: • `un`*x*, `un`*y*, and `un`*z* for the up direction • `dn`*x*, `dn`*y*, and `dn`*z* for the down direction

To visualize any of these vector variables use arrow plots on surfaces or lines.

If a deformed mesh is used, the normal variables are available both for the deformed configuration and for the undeformed configuration. In the first case, replace *x*, *y*, and *z* with the spatial coordinate names (`x`, `y`, and `z` by default). In the second case, replace *x*, *y*, and *z* with the material/reference coordinate names (`X`, `Y`, and `Z` by default).

Normal Vector Variables Representing Element Surface Normals

A similar set of variables — `nxmesh`, `unxmesh`, and `dnxmesh`, where *x* is the name of a spatial coordinate — use the element shape function and are normal to the actual element surfaces rather than to the geometry surfaces. These normal vectors always have unit length, but they are typically not continuous at interelement boundaries.

Normal Vector Continuous Variables

In some situations, it can be necessary to use a normal vector which is based on the mesh element shape functions, but is still continuous. Such normal vector components are defined with names similar to those for the standard normal vector variables, except that they have a `c` appended at the end: For example, `nxc`, `nyc`, and `nzc` in a 3D model or `nrc` and `nzc` in a 2D axisymmetric model. If you have a material frame and a spatial frame in a 3D model, the normal vector continuous variables are `nxc`, `nyc`, and `nzc` for the spatial frame and `nXc`, `nYc`, and `nZc` for the material frame.

These variables are continuous within each boundary (but typically discontinuous where boundaries meet), *but they do not necessarily have unit length*. It is possible to compute their tangential derivatives with the `dtang` operator as, for example, `dtang(nxc,x)`. Computing tangential derivatives in this way works only when the normal variable and the coordinate in the second argument of `dtang` belong to the same frame; `dtang(nxc,x)` and `dtang(nXc,X)` both work, but `dtang(nXc,x)` and `dtang(nxc,X)` are both 0.

CURVATURE VARIABLES

The curvature variables are defined on boundaries in 2D and 3D.

In 2D, the curvature is denoted `curv`. Positive curvature is toward the normal (`n`*x*, `n`*y*).

In 2D axisymmetry, the curvature variables refer to the curvature of the 2D geometry and use the same naming as in 2D. The second curvature, which is induced by the axisymmetry, is `-nr/r` (using the default radial space variable name `r`) and has no predefined variable.

In 3D, there are two principal curvatures named `curv1` and `curv2`, where `curv1` is less than `curv2` and seen as real numbers. These correspond to the minimal and maximal values for the curvature of a curve you get by intersecting the boundary with a plane in which the normal lies. Positive curvature is toward the normal (`nx`,`ny`,`nz`).

The components of the normalized tangential directions for the corresponding curvatures are called `tcurv`x, `tcurv`y in 2D and `tcurv1`x, `tcurv1`y, `tcurv1`z, `tcurv2`x, `tcurv2`y, and `tcurv2`z in 3D. The tangents (`tcurv1`x,`tcurv1`y,`tcurv1`z) and (`tcurv2`x,`tcurv2`y,`tcurv2`z) are orthogonal.

Curvature variables are defined for all separate frames in a model. The names of the curvature variables in the spatial, mesh, and geometry frame are formed by appending the suffix `_spatial`, `_mesh`, and `_geometry`, respectively, to the name `curv` (in 2D and 2D axisymmetry) or `curv1` and `curv2` (in 3D). The variables without suffix always refer to the curvature in the material frame. Note that the variables with suffix are defined only if the spatial, mesh, or geometry frame actually is different from the material frame. For more information about frames and deformed mesh configurations, see Deformed Mesh Fundamentals.

In the normalized tangent variable names, replace x, y, and z with the coordinate names in another frame to get the tangents in that frame.

FRAME VARIABLES

The following predefined variables are created by the spatial frame and can be of interest, for example, to monitor the quality of the mesh and define a stop criterion for remeshing (see Adding a Stop Condition):

- The local relative element volume, `spatial.relVol`, is a quantity that measures the local volumetric distortion of the elements. When this measure approaches zero in some part of the mesh, frame transformations become singular causing solvers to fail.
- The minimum relative element volume, `spatial.relVolMin`, must be > 0; otherwise, the mesh elements are inverted. A suitable stop criterion using this variable is that the minimum relative element volume must be larger than a small positive number.
- The maximum relative element volume, `spatial.relVolMax`, is a positive scalar number that represents the maximum value of the relative element volume.
- The minimum mesh quality, `spatial.minqual`, must be > 0; an acceptable mesh quality is typically larger than 0.1 (where the quality measure is a number between 0 and 1).

Material Group Indicator Variables

These variables make it possible to identify groups of geometric entities share material property expressions. There is a variable for each geometric entity level, and they evaluate to different (but arbitrary) integers on different groups of domains where material property expressions are the same within each group. The following variables are available:

- `material.domain`
- `material.boundary`
- `material.edge`
- `material.point`
- `material.entity`, which is defined on all entity levels.

The applicable variables (except `material.entity`) are available for postprocessing under **Model>Material** in the lists of predefined quantities for expressions in plots, for example.

These variables are useful for smoothing plot data across entity boundaries within the group but not across groups with different materials. The option **Inside material domains** available in the **Smoothing** list in quality settings for plots uses these variables. See Entering Quality Settings for Plot Settings Windows.

Shape Function Variables

A finite element defines a number of variables, typically a dependent variable and its derivatives. Such variables are called shape functions variables because they are computed directly from *shape functions* and the degrees of freedom.

When a physics interface is selected, you can enter names for the dependent variables; these names are used to construct the finite elements. The dependent variable name is the basis for additional variable names that the finite elements generate.

!	When entering the shape function variables, replace the letters highlighted below in *italic font* with the actual names for the dependent variables (solution components) and independent variables (spatial coordinates) for the Component.

For example, replace u with the names of the dependent variables in the individual Component, and replace x, y, and z with the first, second, and third spatial coordinate variable, respectively. x_i represents the ith spatial coordinate variable. If the Component contains a deformed mesh or the displacements control the spatial frame (in solid mechanics, for example), you can replace the symbols x, y, z with either the spatial coordinates (`x`, `y`, and `z` by default) or the material/reference coordinates (`X`, `Y`, and `Z` by default).

AN EXAMPLE OF LAGRANGE ELEMENT VARIABLES

For the Lagrange element, which is the element type used by most physics interfaces, Table 5-10 lists the available variable names, assuming you gave the name u as the argument to the shape function, and that the names x, y, and z are provided for the independent variables.

TABLE 5-10: LAGRANGE ELEMENT VARIABLE NAMES

ENTITY TYPE\ SPACE DIMENSION	1D	2D	3D
POINT		u	u
EDGE			u, uTx, uTy, uTz
BOUNDARY	u, uTx, ut, uTxt	u, uTx, uTy, ut, uTxt, uTyt	u, uTx, uTy, uTz, ut, uTxt, uTyt, uTzt
DOMAIN	u, ux, uxx, ut, uxt, uxxt, $u$tt, uxtt, uxxtt,	u, ux, uy, uxx, uxy, uyx, uyy, ut, uxt, uyt, uxxt, uxyt, uyxt, uyyt, $u$tt, uxtt, uytt, uxxtt, uxytt, uyxtt, uyytt	u, ux, uy, uz, uxx, uxy, uxz, uyx, uyy, uyz, uzx, uzy, uzz, ut, uxt, uyt, uzt, uxxt, uxyt, uxzt, uyxt, uyyt, uyzt, uzxt, uzyt, uzzt, $u$tt, uxtt, uytt, uztt, uxxtt, uxytt, uxztt, uyxtt, uyytt, uyztt, uzxtt, uzytt, uzztt

For example, with a fluid flow physics interface, you get the set of variables indicated in Table 5-10 for `u`, `v`, `w`, and `p`, respectively.

- The variables ux, uy, and uz are the components of the gradient ∇u, that is, the 1st-order spatial derivatives.

- The variables *uxx*, *uxy*, *uxz*, *uyx*, *uyy*, *uyz*, *uzx*, *uzy*, and *uzz* are the 2nd-order space derivative components. They are meaningful only if the degree of the polynomial shape function used in an element is high enough. For first-order elements all these variables evaluate to zero.
- For elements with 2nd-degree polynomial shape functions (2nd-order elements), the polynomial degree of the 2nd-order derivatives is zero; that is, the second derivatives are constant in each element.
- For element orders lower than two, the second derivatives evaluate to zero regardless of the values of the 2nd-order derivatives of the true solution.

If the model uses a deformed mesh, each finite element is associated with a certain frame (the spatial frame or the material frame). The frame determines the names of the variables generated by the finite element. For instance, if the spatial frame is used, the Lagrange element computes derivatives with respect to the spatial coordinates, `ux`, `uy`, and `uz`. If the material frame is used, the Lagrange element computes derivatives with respect to the material coordinates `uX`, `uY`, and `uZ`.

THE TIME DERIVATIVES OF THE DEPENDENT VARIABLES

The variable u`t` is the time derivative of the dependent variable u. You can also form mixed space-time derivatives as ux_i`t`, for example, `uxt`,

$$\frac{\partial^2 u}{\partial x \partial t}$$

> The `t` must be last in a mixed derivative. The second time derivatives can also be used, such as `utt` or `uxtt` (but not higher derivatives in time).

If the model contains a deformed mesh, there is, in addition to the usual time derivative `ut`, the *mesh time derivative* `uTIME`. This also holds for mixed space-time derivatives.

TANGENTIAL DERIVATIVE VARIABLES

On boundaries, edges, and points you also have access to *tangential derivative variables*. They have names such as u`T`x, u`T`y, and u`T`z. Using these variables, it is possible to create models with phenomena on boundaries, edges, or points as described with PDEs.

The tangential derivative variables represent the Cartesian components of the tangential projection of the gradient of shape function variables:

$$(\nabla u)_T = (I - \mathbf{n}\mathbf{n}^T) \cdot \nabla u$$

In this equation, $(\nabla u)_T$ is the tangential gradient, which consists of the tangential derivatives in each spatial direction, I is the unity tensor, $\mathbf{n}$ is the outward unit normal vector, and ∇u is the gradient of u.

LAGRANGE MULTIPLIER VARIABLES

If weak constraints are activated for boundary conditions that are constraints (Dirichlet boundary conditions), COMSOL Multiphysics adds variables for the Lagrange multipliers (one for each dependent variable) by adding `_lm` as a suffix to the dependent variable name. For example, for a dependent variable u, the corresponding Lagrange variable is `u_lm`. The Lagrange multipliers are available on boundaries, and you can also evaluate them on edges (in 3D) and points (in 2D and 3D).

VARIABLE INHERITANCE

On boundaries, edges, and points, gradients and second derivatives of the shape functions are available by *inheritance*; that is, the average of the values of the variables from the adjacent domains are computed. This process can progress for several levels.

For example, `ux` is the average on a boundary from the adjacent domains, then the average on an edge from the adjacent boundaries, and finally, the average at the points from the adjacent edges.

If possible, avoid using variable inheritance for gradients and second derivatives in a model. Instead, use the tangential derivative variables for equation-based modeling on boundaries, or use the `up(`*`expr`*`)`, `down(`*`expr`*`)`, and `side(`*`dom,expr`*`)` as appropriate to move the evaluation to the adjacent domain.

For computations of integrals of reaction forces and fluxes, use the reacf operator.

For high accuracy reaction forces and fluxes in other circumstances, use weak constraints and Lagrange multipliers on boundaries instead of directly accessing the gradient through inheritance (see Computing Accurate Fluxes).

When you plot or evaluate — on a boundary, for example — the value of a variable that is discontinuous across that boundary (a thin resistive layer, for example), the value is the average of the value on the "up" and "down" sides of the boundary. You can use the `up` and `down` operators to get the value on either side of the boundary (see up and down).

Solver Variables

The following table lists global solver variables that are available during the solution process only. They can be used in solver settings in the Study branches but are not available for use in, for example, results evaluations and plots.

TABLE 5-11: SOLVER VARIABLES

VARIABLE	DESCRIPTION
`niterCMP`	This variable contains the iteration number for nonlinear iterations. It starts from one and increases with one for each fully coupled or segregated iteration. It is used by some physics to control damping mechanisms. Examples are pseudo-time stepping in fluid dynamics and the penalty factor in the augmented Lagrangian method for contact problems in structural mechanics.
`gmg_level`	This variable contains the geometric multigrid level. It is zero for the top level (the one solved for), one for the next coarser level, and so on. It is used by some physics interfaces to control artificial stabilization.
`timestep`	This variable contains the current time step used by the time-dependent solver. It is used by some physics interfaces to control artificial stabilization. You can use it, for example, to create a stop condition that stops the time stepping if the time step becomes smaller than some threshold value.
`currentiter`	This variable contains the current iteration used by study steps that create For and End For nodes in the solver sequence. It is used by some physics interfaces, for example, to compute the average value of a quantity over several iterations of the solver sequence.

Entering Ranges and Vector-Valued Expressions

You can enter ranges and vector-valued expressions such as extra grid-line coordinates using the following formats:

- A space-separated or comma-separated list of values: `10, 15, 23, 29.7, 30`.
- A delimited space-separated list using curly braces; for example, using it as an argument to a function such as a mathematical function or a user-defined function: `cos({0 pi/4 pi/2})` or `an1({1, 2, pi, 14/2})`. The curly

braces can also be used to create a scalar-vector multiplication such as `{0, 1,2}*10` or as an elementwise array multiplication such as `{0,1,2}*{10,11,13}`, which results in the array `{0,11,26}`.

- Equally-spaced values using the `range` function as in `range(start value,step_size,end value)`. For example, `range(0,0.2,3)` creates the values 0, 0.2, 0.4,..., 2.6, 2.8, and 3.0. The step size is 1 if you provide only start and end values and skip the step value. You can also use the range function as input to a used-defined function, for example: `an1(range(0,1,12))`.

	start_value can be either smaller or larger than *end_value*. In the latter case, the step size must be negative. For example, `range(0,-5,-100)` creates the values 0, –5, –10, ..., –95, –100, while `range(0,5,-100)` is an empty set of values.

Combine these formats in a single expression to create an array of values that contain an arbitrary number of segments with differently spaced values mixed with other freely specified values.

EXAMPLES USING THE RANGE FUNCTION

- `range(a,(b-a)/(n-1),b)` gives a list of *n* equally-spaced increasing values in the range [`a`, `b`] if `b >a` or decreasing values in the range [`b`, `a`] if `a >b`.
- `10^range(-3,3)` gives the exponentially increasing sequence 10^{-3}, 10^{-2}, ..., 10^{3}.
- `1^range(1,10)` gives a sequence of length 10 where all elements equal 1. Multiplying the vector `1^range(1,n)` by a constant value `a` gives a vector of *n* elements all equal to `a`.
- `0^range(1,5)` gives the sequence `0 0 0 0 0`.

USING RANGES TO GENERATE ARRAYS

A convenient way to generate vectors of values is to use the **Range** dialog box, which you open by clicking the **Range** button ( ) next to most of the fields that accept vectors of values.

In that dialog box, use the **Entry method** list to select the method to enter the values that define the range:

- Select **Step** to define range using a specified step size. See Step and Number of Values.
- Select **Number of values** to define range using a specified number of values. See Step and Number of Values.
- Select **Logarithmic** to define a logarithmic range of values. See Logarithmic.
- Select **ISO preferred frequencies** to define the range using an octave or other interval of ISO preferred frequencies. To show this option, click the **Show More Options** button ( ) and select **Advanced Study Options** in the **Show More Options** dialog box. It also appears if the model contains a physics interface that requires the Acoustics Module.

Step and Number of Values

Step to enter a step size or **Number of values** to specify the number of values in the array. Specify the start value for an array of values in the **Start** field. Enter the step size in the **Step** field or the number of values in the **Number of values** field, depending on the setting in the **Entry method** list. Specify the end value for the array of values in the **Stop** field. By default, the spacing of the values is linear, but you can select a function to apply to all values. To do so, choose one of the available arithmetic and trigonometric functions as well as user-defined functions and functions from materials (with a single argument) from the **Function to apply to all values** list. For example, select **exp10** to create an array of exponentially increasing values. The list includes the following functions:

- The default value **None**, which means linear spacing using the `range` function directly with the values specified.
- The exponential functions **exp10** (base-10 exponential function) and **exp** (base-*e* exponential function), which create exponentially-spaced values using the specified range of values as powers of 10 and of the mathematical constant *e*, respectively.

- The trigonometric functions **cos** (cosine) and **sin** (sine), which create sinusoidally varying values.
- The square root function **sqrt**, which creates a vector with values that are the square roots of the values specified.

Logarithmic

Use this entry method to set up a logarithmic range of values (frequencies, for example). Enter the **Start** value (`fmin` in the expression below), the **Stop** value (`fmax` in the expression below), and the **Steps per decade** (`N` in the expression below). The range then becomes `10^{range(log10(fmin),1/(N-1),log10(fmax))}`

ISO Preferred Frequencies

To show this option, click the **Show More Options** button ( ) and select **Advanced Study Options** in the **Show More Options** dialog box. This method requires a license for the Acoustics Module. Use this entry method to set up ISO preferred frequencies — a list of frequencies defined based on the preferred numbers of ISO 3. Enter the **Start frequency**, the **Stop frequency**, and an **Interval**: **Octave**, **1/3 octave** (the default), **1/6 octave**, **1/12 octave**, or **1/24 octave**. For example, range of frequencies between 1 and 10 using an octave is {1, 2, 4, 8} and, using 1/3 octave, it is {1, 1.25, 1.6, 2, 2.5, 3.15, 4, 5, 6.3, 8, 10}.

Common Settings

Click **Replace** to replace the contents in the field with the values specified in the **Range** dialog box.

Click **Add** to add the range of values to the end of the existing values in the associated field. That way you can create more complex ranges.

For ranges that contain integer values only, an **Integer Range** dialog box opens instead of the normal **Range** dialog box. The **Integer Range** dialog box only contains **Start**, **Step**, and **Stop** fields, all of which must contain integer values.

SUPPORT FOR RANGES AND VECTOR-VALUED EXPRESSIONS

The following modeling settings support ranges and vector-valued expressions:

- Extra grid lines in the **Settings** window for **Axis**.
- Interval coordinates when using the **Settings** window for **Interval** for 1D geometries.
- The **Copy**, **Move**, and **Rotate** transforms for geometry modeling.
- The times for output from the time-dependent solver and the list of parameter values in the **Settings** windows for study step nodes for time-dependent and stationary solvers and for parametric sweeps.
- The contour levels, the streamline start-point coordinates, and the coordinates in arrow plots. Whenever you specify a number of coordinates in **Settings** windows for plots, the COMSOL Multiphysics software uses scalar expansion — if one component is the same for all coordinates, enter a single number in the corresponding text field. For example, to get 101 linearly spaced coordinates from $y = 6$ to $y = 7$ along $x = 3$, enter it as the single scalar `3` for x and then `range(6,0.01,7)` for y. Thus, you need not enter 101 similar values for x.
- Element distribution in the meshing settings.

	Because the `range` function returns a list of values, it is a vector-valued function that you cannot use in a definition of a variable, for example. Variables must return a scalar value.

Summary of Built-In Variables With Reserved Names

This section is an overview of the built-in elements of the following categories as defined by the underlying COMSOL Multiphysics language:

- Constants
- Variables
- Functions

These language elements are built-in or user-defined. In addition there are *operators* that cannot be user-defined, and *expressions*, which are always user-defined.

ABOUT RESERVED NAMES

Built-in variables have *reserved names*, names that cannot or should not be redefined by the user. It is not recommended to use a reserved variable name for a user-defined variable, parameter, or function. For some of the most common reserved variable names, such as `pi`, `i`, and `j`, the text where you enter the name turns orange and you get a tooltip message if you select the text string. Reserved function names are reserved only for function names, which means that such names can be used for variable and parameter names, and vice versa. The following tables list most built-in elements and hence those reserved names.

CONSTANTS AND PARAMETERS

There are three different types of constants: built-in *mathematical and numerical constants*, built-in *physical constants*, and *parameters*. Parameters are user-defined constants that can vary over parameter sweeps. Constants are scalar valued. The following table lists the built-in physical constants. Constants and parameters can have units.

BUILT-IN PHYSICAL CONSTANTS

TABLE 5-12: BUILT-IN PHYSICAL CONSTANTS

NAME	DESCRIPTION
`g_const`	Acceleration of gravity
`N_A_const`	Avogadro constant
`k_B_const`	Boltzmann constant
`Z0_const`	Characteristic impedance of vacuum (impedance of free space)
`me_const`	Electron mass
`e_const`	Elementary charge
`F_const`	Faraday constant
`alpha_const`	Fine-structure constant
`G_const`	Gravitational constant
`V_m_const`	Molar volume of ideal gas (at 273.15 K and 1 atm)
`mn_const`	Neutron mass
`mu0_const`	Permeability of vacuum (magnetic constant)
`epsilon0_const`	Permittivity of vacuum (electric constant)
`h_const`	Planck's constant
`hbar_const`	Planck's constant over 2 pi
`mp_const`	Proton mass
`c_const`	Speed of light in vacuum
`sigma_const`	Stefan-Boltzmann constant
`R_const`	Universal gas constant
`b_const`	Wien displacement law constant

BUILT-IN MATHEMATICAL FUNCTIONS

These functions do not have units for their input or output arguments.

TABLE 5-13: BUILT-IN MATHEMATICAL FUNCTIONS

NAME	DESCRIPTION	SYNTAX
`abs`	Absolute value	`abs(x)`
`acos`	Inverse cosine (in radians)	`acos(x)`

TABLE 5-13: BUILT-IN MATHEMATICAL FUNCTIONS

NAME	DESCRIPTION	SYNTAX
`acosh`	Inverse hyperbolic cosine	`acosh(x)`
`acot`	Inverse cotangent (in radians)	`acot(x)`
`acoth`	Inverse hyperbolic cotangent	`acoth(x)`
`acsc`	Inverse cosecant (in radians)	`acsc(x)`
`acsch`	Inverse hyperbolic cosecant	`acsch(x)`
`arg`	Phase angle (in radians)	`arg(z)`
`asec`	Inverse secant (in radians)	`asec(x)`
`asech`	Inverse hyperbolic secant	`asech(x)`
`asin`	Inverse sine (in radians)	`asin(x)`
`asinh`	Inverse hyperbolic sine	`asinh(x)`
`atan`	Inverse tangent (in radians)	`atan(x)`
`atan2`	Four-quadrant inverse tangent (in radians)	`atan2(y,x)`
`atanh`	Inverse hyperbolic tangent	`atanh(x)`
`besselj`	Bessel function of the first kind	`besselj(n,z)`
`bessely`	Bessel function of the second kind	`bessely(n,z)`
`besseli`	Modified Bessel function of the first kind	`besseli(n,z)`
`besselk`	Modified Bessel function of the second kind	`besselk(n,z)`
`binomial`	Binomial coefficient $\binom{n}{k}$	`binomial(n,k)`
`ceil`	Nearest following integer	`ceil(x)`
`conj`	Complex conjugate	`conj(x)`
`cos`	Cosine	`cos(z)`
`cosh`	Hyperbolic cosine	`cosh(x)`
`cot`	Cotangent	`cot(x)`
`coth`	Hyperbolic cotangent	`coth(x)`
`csc`	Cosecant	`csc(z)`
`csch`	Hyperbolic cosecant	`csch(x)`
`erf`	Error function	`erf(x)`
`exp`	Exponential	`exp(x)`
`factorial`	Factorial of nonnegative integer	`factorial(n)`
`floor`	Nearest previous integer	`floor(x)`
`gamma`	Gamma function	`gamma(x)`
`imag`	Imaginary part	`imag(x)`
`legendre`	Legendre polynomial and associated Legendre polynomial of integer degree and order (see legendre for more information)	`legendre(l,x)` `legendre(l,m,x)`
`log`	Natural logarithm	`log(x)`
`log10`	Base-10 logarithm	`log10(x)`
`log2`	Base-2 logarithm	`log2(x)`
`max`	Maximum of two arguments	`max(x,y)`
`min`	Minimum of two arguments	`min(x,y)`
`mod`	Modulo operator	`mod(x,y)`
`psi`	Psi function and its derivatives (`psi(0,x)` is the digamma function)	`psi(k,x)`

TABLE 5-13: BUILT-IN MATHEMATICAL FUNCTIONS

NAME	DESCRIPTION	SYNTAX
`range`	Create a range of numbers (see Entering Ranges and Vector-Valued Expressions)	`range(start,step,end)`
`real`	Real part	`real(x)`
`round`	Round to closest integer	`round(x)`
`sec`	Secant	`sec(z)`
`sech`	Hyperbolic secant	`sech(x)`
`sign`	Signum function	`sign(x)`
`sin`	Sine	`sin(z)`
`sinh`	Hyperbolic sine	`sinh(x)`
`sphericaly`	Spherical harmonic function (see sphericaly for more information)	`sphericaly(l,m,theta,phi)`
`sphericalyr`	Real spherical harmonic function (see sphericalyr for more information)	`sphericalyr(l,m,theta,phi)`
`sqrt`	Square root	`sqrt(x)`
`tan`	Tangent	`tan(z)`
`tanh`	Hyperbolic tangent	`tanh(x)`
`zernike`	Zernike polynomial function (see zernike for more information	`zernike(n,m,r,phi)`

legendre

The `legendre(l,x)` function evaluates a Legendre polynomial $P_l(x)$ of integer degree l:

$$P_l(x) = \frac{1}{2^l l!}\frac{d^l}{dx^l}(x^2-1)^l$$

The `legendre(l,m,x)` function evaluates an associated Legendre polynomial $P_l^m(x)$ of integer degree l and order m:

$$P_l^m(x) = \begin{cases} (-1)^m(1-x^2)^{\frac{m}{2}}\dfrac{d^m}{dx^m}(P_l(x)) & m>0 \\ P_l(x) & m=0 \\ (-1)^m\dfrac{(l-|m|)!}{(1+|m|)!}\cdot P_l^{|m|}(x) & m<0 \end{cases}$$

The degree l must be a nonnegative constant integer, and the order m must be a constant integer. For $|m|>l$, `legendre(l,m,x)` returns zero.

sphericaly

The `sphericaly(l,m,theta,phi)` function evaluates the spherical harmonic function $Y_l^m(\theta,\varphi)$:

$$Y_l^m(\theta,\varphi) = \begin{cases} (-1)^m\sqrt{\dfrac{(2l+1)}{4\pi}\dfrac{(l-m)!}{(l+m)!}}\sin(\theta)^m\dfrac{d^m}{d(\cos(\theta))^m}(P_l(\cos(\theta)))e^{im\varphi} & m>0 \\ P_l(\cos(\theta)) & m=0 \\ \sqrt{\dfrac{(2l+1)}{4\pi}\dfrac{(l-|m|)!}{(l+|m|)!}}\sin(\theta)^{|m|}\dfrac{d^{|m|}}{d(\cos(\theta))^{|m|}}(P_l(\cos(\theta)))e^{im\varphi} & m<0 \end{cases}$$

where P_l is the Legendre polynomial of degree l. The degree l must be a nonnegative constant integer, and the order m must be a constant integer. For $|m| > l$, `sphericaly(l,m,theta,phi)` returns zero.

sphericalyr

The `sphericalyr(l,m,theta,phi)` function evaluates the real spherical harmonic function $Y_{lm}(\theta, \varphi)$:

$$Y_{lm}(\theta, \varphi) = \begin{cases} \frac{1}{\sqrt{2}}(Y_l^{-m}(\theta, \varphi) + (-1)^m (Y_l^m(\theta, \varphi))) & m > 0 \\ Y_l^0(\theta, \varphi) & m = 0 \\ \frac{i}{\sqrt{2}}(Y_l^m(\theta, \varphi) - (-1)^m Y_l^{-m}(\theta, \varphi)) & m < 0 \end{cases}$$

The degree l must be a nonnegative constant integer, and the order m must be a constant integer. For $|m| > l$, `sphericalyr(l,m,theta,phi)` returns zero. The arguments θ and φ must be real.

zernike

The `zernike(m,n,r,phi)` function evaluates a Zernike polynomial $Z_n^m(r, \varphi)$ defined in the following way:

$$Z_n^m(r, \varphi) = \begin{cases} N_n^m R_n^m(r) \cos(m\varphi) & m \geq 0 \\ N_n^m R_n^m(r) \sin(|m|\varphi) & m < 0 \end{cases}$$

where $R_n^m(r)$ is the radial part:

$$R_n^m(r) = \begin{cases} \sum_{k=0}^{\frac{n-|m|}{2}} \frac{(-1)^k (n-k)!}{k!\left(\frac{n+m}{2} - k\right)!\left(\frac{n-m}{2} - k\right)!} r^{n-2k} & (n-m) \text{ is even} \\ 0 & (n-m) \text{ is odd} \end{cases}$$

and $N_n^m = \sqrt{(2 - \delta_{m0})(n+1)}$ is the normalization factor. The n argument is required to be a nonnegative constant integer, and the m argument is required to be a constant integer satisfying $|m| \leq n$. The r and φ arguments are required to be real.

SUMMARY OF GENERAL BUILT-IN VARIABLES AND CONSTANTS

The following table summarizes the built-in variables and constants that are generally available in all COMSOL Multiphysics models. Some are only available in certain geometries or in time-dependent models, for example. These variable names are reserved names and appear in orange in the **Settings** windows for parameters and variables.

TABLE 5-14: BUILT-IN VARIABLES AND CONSTANTS

NAME	DESCRIPTION	TYPE
`t`	Time.	Scalar
`freq`	Frequency.	Scalar
`lambda`	Eigenvalues.	Scalar
`phase`	Phase angle.	Scalar
`numberofdofs`	Number of degrees of freedom.	Scalar
`x`, `y`, `z`, `r`, `X`, `Y`, `Z`, `R`	Position.	Field
`s`, `s1`, `s2`	Edge/surface parameters.	Field
`n`, `nx`, `ny`, `nz`, `nr`	Edge/surface normals.	Field
`tx`, `ty`, `tz`, `tr`	Edge tangents.	Field

TABLE 5-14: BUILT-IN VARIABLES AND CONSTANTS

NAME	DESCRIPTION	TYPE
`t1x`, `t1y`, `t1z`, `t2x`, `t2y`, `t2z`	Surface tangents.	Field
`un`, `unx`, `uny`, `unz`	Edge/surface upward normals.	Field
`dn`, `dnx`, `dny`, `dnz`	Edge/surface downward normals.	Field
`eps`, `i`, `j`, `pi`, `inf`, `Inf`, `nan`, `NaN`	Numerical constants.	Scalar
`h`	Local mesh element size (length of the longest element edge).	Field
`dom`	The domain number, boundary number, edge number, or point number.	Field
`meshtype`	Mesh type index for the mesh element; this is the number of edges in the element.	Field
`meshelement`	Mesh element number.	Field
`meshvol`	Volume/area/length of the (linearized) mesh element.	Field
`dvol`	Volume/area/length scale factor variable; this is the determinant of the Jacobian matrix for the mapping from local (element) coordinates to global coordinates.	Field
`qual`	A mesh quality measure between 0 (poor quality) and 1 (perfect quality). The absolute value of the mesh element quality is based on the ratios of the inscribed and circumscribed circles' or spheres' radii for the simplex corresponding to each corner of the element. A negative value means a contradiction to the numbering convention for mesh element vertices and the element is then referred to as an inverted element.	Field
`reldetjac`	Determinant of the Jacobian matrix for the mapping from the straight mesh element to the possibly curved element used when solving.	Field
`reldetjacmin`	The minimum value of the `reldetjac` variable in each element.	Field
`linearizedelem`	One inside elements that have been linearized; zero otherwise.	Field
`niterCMP`	Iteration number for nonlinear iterations.	Scalar
`gmg_level`	Geometric multigrid level.	Scalar
`timestep`	Current time step.	Scalar
`particleindex`	A unique positive integer to define each particle or ray. This variable is only defined when using the Geometrical Optics interface, Ray Acoustics interface, or one of the particle tracing physics interfaces.	Scalar
`particlestatus`	An integer that corresponds to the status of a particle or ray, which indicates whether the particle or ray is active or has been subjected to certain types of boundary conditions. This variable is only defined when using the Geometrical Optics interface, Ray Acoustics interface, or one of the particle tracing physics interfaces. By default it cannot be used during postprocessing.	Scalar

The suffixes `x`, `y`, `z`, and `r` in some of the variables are the default names for the spatial coordinates, which you can change if desired.

The following user-defined variables generate built-in variables such as space and time derivatives. See Shape Function Variables for information about those built-in variables.

TABLE 5-15: USER-DEFINED VARIABLES THAT GENERATE BUILT-IN VARIABLES

DEFAULT NAME	DESCRIPTION	TYPE
x, y, z	Spatial coordinates (Cartesian)	Field
r, z	Spatial coordinates (cylindrical)	Field
u, T, and so on	Dependent variables (solution)	Field

Mass Properties

Introduction

You can add one or more **Mass Properties** nodes to create variables for and compute the following quantities for a model component:

- The volume of the geometry or part of the geometry.
- The mass of the geometry or part of the geometry
- The center of mass
- The moment of inertia
- The principal moment of inertia

When you compute the solution, the COMSOL Multiphysics software adds the following variables:

TABLE 5-16: VARIABLES CREATED BY A MASS PROPERTIES NODE

QUANTITY	TYPICAL VARIABLE NAMES
Volume	`mass1.volume`
Mass	`mass1.mass`
Center of mass	`mass1.CMX`, `mass1.CMY`, `mass1.CMZ`
Moment of inertia	`mass1.IXX`, `mass1.IXY`, `mass1.IXZ`, and so on
Moment of inertia, principal direction	`mass1.Ip1X`, `mass1.Ip2X`, `mass1.Ip3X`, and so on
Moment of inertia, principal values	`mass1.Ip1`, `mass1.Ip2`, and `mass1.Ip3`

The namespace of the variables — `mass1` in the table above — is unique for each **Mass Properties** node.

In general, the characters `X`, `Y`, and `Z` in the variable names in the table above are replaced by the coordinate names in the selected frame.

Use a **Global Evaluation** node, for example, to evaluate the resulting measurement quantities, which you can select from a **Definitions>Mass Properties** submenu after clicking the **Replace Expression** ( ) or the **Insert Expression** ( ) button.

Mass Properties

In the **Definitions** toolbar, click to add a **Mass Properties** ( ) node and compute the variables for mass, volume, center of gravity, and moment of inertia. Under a **Component** you can also right-click **Definitions** to add this feature from the **Variable Utilities** submenu.

The **Settings** window for a **Mass Properties** node includes the following sections:

SOURCE SELECTION

The source selection defines the source for the mass property variables — the part of the geometry over which the program computes the measurement variables and to which the density contribution is limited. you can add other density contributions by right-clicking the **Mass Properties** node and choosing **Mass Contributions** ( ); see Mass Contributions.

From the **Geometric entity level** list, select **Domain** (the default), **Boundary**, **Edge** (3D only), or **Point**. Select **Manual** or **All domains** (the default), **All boundaries**, **All edges**, or **All points** from the **Selection** list. If **Manual** is selected, select geometric entities in the **Graphics** window.

DENSITY

In this section you define the source of the density values used for computing some of the mass properties using the **Density source** list:

- Choose **User defined** (the default), to define a value or expression for the density in the **Density expression** field (SI unit: kg/m^3). For example, `material.rho`, which is a variable for the density from the materials in the model. Use the **Density input frame** list to specify the frame in which the density is given. The default **Material** frame indicates that the given density expression is not a function of the strain; **Spatial** frame indicates that the density expression is an instantaneous value dependent on the material strain. Note that the actual coordinate names — typically **(x, y, z)** or **(X, Y, Z)** in 3D — are displayed for each frame.
- Choose **From physics interface** to take the density from the active physics interface in the geometry. If there are two or more physics interfaces that provide a density in the same domain, the density used can be from any of the physics interfaces (but the density is then typically the same in those physics interfaces). The **Include adjacent entities of lower dimension** check box is selected by default to include the density also on adjacent boundaries, edges, and points.
- Choose **From specified physics interface** to take the density from a physics interface that you choose from the **Physics** list. The **Include adjacent entities of lower dimension** check box is selected by default to include the density also on adjacent boundaries, edges, and points.

VARIABLES

In this section, select the variables to create and which body shape they should refer to. From the **Frame** list, choose the coordinates to use in the definition of the mass properties. For example, selecting the **Material** frame means that the center of mass is computed for the undeformed shape; selecting the **Spatial** frame returns the center of mass in the deformed configuration. In these cases, the density is transformed to the selected frame before integration. Choosing the **Geometry** frame has a slightly different meaning: the density in the geometry frame is assumed to be the same as in the material frame. That is, the difference between the geometry and material frames do not imply any material strain. Note that the actual coordinate names — typically **(x, y, z)** or **(X, Y, Z)** in 3D — are displayed for each frame.

The following check boxes are selected by default to create and compute the corresponding mass property:

- **Create volume variable** to create a variable for the volume of the selected geometric entities.
- **Create mass variable** to create a variable for the mass of the selected geometric entities.
- **Create center of mass variables** to create variables for the center of mass of the selected geometric entities.
- **Create moment of inertia variables** to create variables for the moment of inertia of the selected geometric entities.
- **Create principal moment of inertia variables** to create a variables for the principal moment of inertia of the selected geometric entities.

These variables are available in, for example, a **Global Evaluation** node under **Results>Derived Values**. Click the **Insert Expression** (+) or **Replace Expression** ( ) button to choose one of the mass property values such as **Model>Component1>Definitions>Mass Properties1>Center of mass>mass1.CMY** for the Y-component of the center of mass.

INTEGRATION SETTINGS

Specify the integration order of the integration used to compute the output variables (see integration order in the *Glossary*). The default in the **Integration order** field is 4 (which typically is twice the order of the shape order function for the physics).

Mass Contributions

In the **Definitions** toolbar, click to add a **Mass Contributions** ( ) node, which you can use to add contributions to the mass used for computing the mass properties in the parent **Mass Properties** node. Under **Definitions**, you can also right-click **Mass Properties** to add this feature.

The contributions can come from a connected boundary, for example. The **Settings** window for a **Mass Contribution** node includes the following sections:

SOURCE SELECTION

The source selection defines the source for the mass contribution to the mass properties — the part of the geometry where you want to add mass contributions.

From the **Geometric entity level** list, select **Domain** (the default), **Boundary**, **Edge** (3D only), or **Point**. Select **Manual** or **All domains** (the default), **All boundaries**, **All edges**, or **All points** from the **Selection** list. If **Manual** is selected, select geometric entities in the **Graphics** window.

DENSITY

In this section you define the source of the density values used for computing some of the mass properties using the **Density source** list:

- Choose **User defined** (the default), to define a value or expression for the density in the **Density expression** field (SI unit: kg/m^3). For example, `material.rho`, which is a variable for the density from the materials in the model. From the **Density input frame** list, specify the frame to which the input density refers: **Material** (the default in 3D), **Mesh**, **Geometry**, or **Spatial**. Note that the actual coordinate names — typically **(x, y, z)** or **(X, Y, Z)** in 3D — are displayed for each frame, indicating which frames differ from each other in the current model.
- Choose **From physics interface** to take the density from the active physics interface in the geometry. If there are two or more physics interfaces that provide a density in the same domain, the first contributions are then overwritten by the last one (but the density is then typically the same in those physics interfaces). The **Include adjacent entities of lower dimension** check box is selected by default to include the density also on adjacent boundaries, edges, and points.
- Choose **From specified physics interface** to take the density from a physics interface that you choose from the **Physics** list. The **Include adjacent entities of lower dimension** check box is selected by default to include the density also on adjacent boundaries, edges, and points.

Functions

User-defined functions can be added globally or locally:

- To add global functions, in the **Home** toolbar (Windows users) or Main toolbar (macOS and Linux users) select an option from the **Functions** menu from the **Global** submenu, or right-click the **Global Definitions** ( ) node.
- You can add local functions (for any **Component** branch), from two toolbars, either the **Definitions** toolbar in the **Functions** group, or in the **Home** toolbar (Windows users) or Main toolbar (macOS and Linux users), where you choose it from the **Local** submenu. You can also right-click the **Definitions** ( ) node and choose an option from the **Functions** submenu.

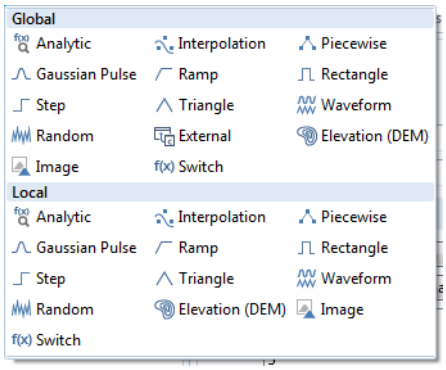

Figure 5-1: The Home toolbar menu for Functions divided into Global and Local submenus for a Windows user.

Switch for Functions

Use the **Switch** node ( ) under the **Global Definitions** node ( ) to switch between global functions during a solver sweep. You add the functions as subnodes under the **Switch** node. The switch for functions acts essentially as a switch statement in a programming language; that is, it dynamically chooses one of its underlying branches depending on a parameter that can be controlled from the solvers using a Function Sweep study.

In addition to the **Label**, you can also enter a name for the switch in the **Function name** field (default: `sw1`). Use that function name where you want to switch across the functions under the **Switch** node using a function sweep. Without a sweep, the function name for the switch uses the first function node under the **Switch** node by default.

The parameter name used by Function Sweep studies is constructed based on the name of the Switch node, prepending the special namespace `funsw`. For example, the parameter controlling a Switch node on the global level will typically be `funsw.sw1`, while for a component-level Switch it will be `funsw.comp1.sw1`.

During a function sweep, the sweep parameter takes consecutive integer values, starting from one, indicating which function under the switch that should currently define the function values. You can use the parameter name in conditional expressions to control also other aspects of the model. Conversely, it is possible to control a function Switch also by manually defining the full switch parameter name in a **Parameters** node. You can then choose the parameter to sweep over in a standard **Parametric Sweep** node or assign it different (integer) values in different parameter **Case** nodes and sweep using a *Parameter switch* sweep.

	When sweeping over functions defined under a **Switch** node, make sure that the functions have the same unit. If the units differ (including some function that assumes dimensionless units) a **Warning** subnode, informing you about the inconsistent unit settings, will appear under the **Compile Equations** node in the solver configuration,

About User-Defined Functions

There are three broad categories of user-defined functions — **Analytic**, **Interpolation**, and **Piecewise** — and a number of templates for common function types, such as step and ramp functions. You can also create external function interfaces to include functions written in C and MATLAB®. Functions can be global or local in a model component, although *external functions* and *MATLAB functions* can only be defined globally.

User-defined functions (including functions defined by materials, thermodynamic property packages, M-files in MATLAB, and external DLLs) can be used in definitions of parameters and in a wide range of settings (where you can also use parameters), including definitions of geometry objects. To access user-defined functions defined under a component from other components and from nodes under **Global Definitions**, add the component's name as a prefix — for example, `comp1.f(x)`. You can also use a user-defined function (with a single argument) as the function to apply in the **Range** dialog box.

FUNCTION NAMES AND CALLING FUNCTIONS

Function names for built-in mathematical functions such as `abs`, `cos`, and `test` are reserved function names, and naming a user-defined function using one of the reserved function names is not recommended because it can cause unexpected results. If the name that you type in the **Function name** field is a reserved function name, the text color changes to orange, as a warning. If you move the cursor to a function name in orange, the tooltip **is a reserved name** is displayed.

If you want to use a user-defined function in the model settings or for postprocessing, then call it with its arguments, such as `func1(x,y)` for a function with two arguments describing a spatial variation in a 2D geometry.

PLOTTING FUNCTIONS

Click the **Plot** button ( ) in the upper-right corner of the **Settings** window to plot any user-defined function of 1–3 variables directly in a separate **Function Plot** window.

Click the **Create Plot** button ( ) in the upper-right corner of the **Settings** window to create a persistent plot of the function under **Results**, including a Grid dataset with the function as the source data, a plot group and a plot feature. The added nodes can be used for plotting multiple functions on top of each other or for direct comparison to model results, for example.

For analytic functions, first define a range for the arguments in the **Plot Parameters** section. Note that the range is expressed in the current unit system's base unit corresponding to the set function argument unit. For example, if the current unit system is SI and the function argument unit is `cm`, the plot range is expressed in `m`.

Common Settings for the Function Nodes

UNITS

By default, functions expect dimensionless inputs and provide dimensionless outputs. When such a function is called with arguments having well-defined units (except when explicitly dimensionless), it is called with the numerical value of the argument expressed in the current unit system for the context where the function is used. The return value from the unit handling perspective behaves like a number, adapting its unit to the context where it is used.

In the **Units** section in the **Settings** window for the Analytic, Interpolation, and Piecewise function nodes, you can define units for the function's inputs and output. In the **Arguments** field, type a single unit for all inputs, or specify

space-separated or comma-separated units for each input (type `m, s`, for example, for two input arguments with the units meter and second, respectively). In the **Function** field, type the unit for the function's output.

When using nested function calls, the unit handling for functions cannot always deduce the correct units. It is therefore recommended that you avoid using the settings in the **Units** section of the function features if you make nested function calls.

DERIVATIVES

For External functions and MATLAB functions, enter expressions for the partial derivatives of each function with respect to their input arguments. The derivative information is needed by the automatic Jacobian computation. In the **Derivatives** table, each row contains a partial derivative of a function with respect to one of its arguments:

- The entries in the **Function name** column must occur in the **Functions** table, and the entries in the **Argument** column must occur among the arguments listed for that function in the **Function** table.
- The **Partial derivative** column contains expressions for the partial derivatives. Partial derivatives that are not specified in the table default to 0.

PLOT PARAMETERS

Use this table to set the range for arguments in preview plots. For each argument, enter a **Lower limit**, and an **Upper limit** in the **Plot Parameters** table. In Analytic function plot settings, the argument column is updated automatically and must always match the specified argument list. For External and MATLAB functions, the argument column is absent. Instead, the limits specified in the table are applied to in order from top to bottom to the arguments of the first function with a matching number of arguments. It is also this first matching function that is plotted when you click the **Plot** button ( ) or the **Create Plot** button ( ).

SMOOTHING

Smoothing makes a function more well-behaved and suitable for modeling. It replaces jumps with smooth transitions that eliminate discontinuities and can represent the inertia present in real applications. Use smoothing to improve the behavior of the model by avoiding discontinuities that are difficult to handle numerically. The smoothed functions have continuous first and, optionally, second derivatives.

For the Step, Triangle, and Rectangle functions, enter a value in the **Size of transition zone** field to control the amount of smoothing. Also, set the **Number of continuous derivatives** to **1** or **2**. The default is to make derivatives continuous up to second order. For the Ramp function, additionally specify a value, if desired, for the **Size of transition zone at start** and, if desired and a cutoff is active, a value for the **Size of transition zone at cutoff**. For the Step function, the step is the same as for the `flc1hs` and `flc2hs` smoothed step functions, depending on the settings in the **Number of continuous derivatives** list (see Additional Smoothed Functions). The parameter `d` in `flc1hs(x,d)`, for example, is set to half of the value in the **Size of transition zone** field,

Note that smoothing affects for which values of the arguments the function is different from zero. In particular, when applying smoothing to a Ramp or Step function, it starts to rise before the position specified in the **Location** field. This may interfere with initialization assuming that the function is zero at this point.

The Waveform function also supports smoothing for some of the waveform types.

Analytic

An **Analytic** function ( ) is defined by a symbolic expression. Analytic functions have the ability to bind arguments during function calls. In other words, they do not require the actual argument names in an expression when writing the function. For example, you can define a function $f(x) = x^2$ with the input argument `x` and the expression `x^2` and then call it as `f(T)`, where `T` is the temperature in a heat transfer model. The default **Function name** is `an1`.

	The Analytic, Interpolation, and Piecewise functions can also be added to Materials. See Using Functions in Materials.

	• See Function Names and Calling Functions for information about allowed function names. • See Units for information about the **Unit** section. • See Plot Parameters for information about **Plot Parameters** (plot range) settings.

DEFINITION

In the **Expression** field, enter the mathematical expression that defines the function, such as `sin(x)*cos(y)+g_const` or `a+b*cos(c)`. Enter **Arguments** to the analytic function as comma-separated entries (`x`, `y` and `a`, `b`, `c` for the functions above, respectively). In addition to the arguments that are defined, analytic functions also recognize global parameters and physical constants (such a `g_const` in the example above). It is also possible to call another function.

From the **Derivatives** list, **Automatic** is selected by default and computes the derivatives symbolically. The COMSOL Multiphysics software uses the derivatives of a function if a variable that depends on the solution is used in a function argument. Select **Manual** to specify the function derivatives with respect to its arguments in a table. If **Manual** is selected, enter the derivatives with respect to the function's arguments. For undefined derivatives, COMSOL Multiphysics uses 0 as the value of the derivative. In the second example above, enter `a`, `b`, and `c` in the top three rows of the **Argument** column, and `1`, `cos(c)`, and `-b*sin(c)`in the associated text fields in the **Partial derivative** column.

PERIODIC EXTENSION

Select the **Make periodic** check box to make the function periodic and extend its definition within an interval to the whole real axis. Then define the interval by entering values in the **Lower limit** (default: 0) and **Upper limit** (default: 1) fields.

ADVANCED

Select the **May produce complex output for real arguments** check box if the defined function works similarly to `sqrt`; that is, if it sometimes returns complex values for a real-valued input.

	• If you have the AC/DC Module, see *A Geoelectrical Forward Problem*: Application Library path **ACDC_Module/Other_Industrial_Applications/geoelectrics**. • If you have the RF Module, see *Second Harmonic Generation of a Gaussian Beam*: Application Library path **RF_Module/Tutorials/second_harmonic_generation**.

Elevation (DEM)

The **Elevation (DEM)** function ( ) makes it possible to import geospatial elevation data from digital elevation models (on the DEM file format using the USGS standard from the United States Geological Survey) and map the

elevation data to a function of x and y. A DEM file contains elevation data for a portion of the Earth's surface. The resulting function behaves essentially like a grid-based interpolation function. The default **Function name** is `elev1`.

FILE

Enter the path and name of the elevation file in the **Filename** text field, or click **Browse** to select a DEM file with elevation data in the **Elevation Data** dialog box. When a DEM file is open, the **File** section displays the coordinates for the southeast corner.

Click **Import** to import the elevation data in the specified DEM file into the model; otherwise, COMSOL Multiphysics references the elevation data on your file system. When the elevation data is imported, the **File** section (under **Data imported into model**) contains information about the filename and the location for the data. Click **Export** to save the elevation data to a file and reference from that file instead of including it in the model. Click the **Discard** button to delete the imported data from the model. Click the **Refresh** button to reread the file.

INTERPOLATION AND EXTRAPOLATION

For interpolation in the elevation data, select an **Interpolation** method from the list: **Nearest neighbor** or **Linear** (the default).

For extrapolation of values that are outside the range in the elevation data, select an **Extrapolation** method from the list: **Constant** (the default), **Linear**, **Nearest function** (which evaluates the function from the closest grid point at the actual point where a value is requested), or **Specific value**. For a **Specific value**, enter a value to **Replace missing data with** field (SI unit: m). The default is 0 m.

On the **Settings** window toolbar, click the **Create Surface** button ( ) to add a **Parametric Surface** node to represent the elevation function as a parametric surface in the **Geometry** branch for 3D models.

External

	The **External** function is only available with the **Global Definitions** node. See also `model.func()` in the *COMSOL Multiphysics Programming Reference Manual* for details about the interface to external functions, including an example and information about compiling the function on the supported platforms.

An **External** function ( ) interfaces with other external functions written in the C language (using a native C function or, through a wrapper function, interfacing with source code written in, for example, Fortran). You can use those functions as any other functions defined in COMSOL Multiphysics. For example, use it for a user-created shared library (depending on the platform, a DLL, .so, or .dylib file).

	Go to Common Settings for the Function Nodes for information about the **Derivatives** and **Plot Parameters** sections.

FUNCTIONS

Enter a **Library** path and name (the complete network path), or click **Browse** to locate a library to import. For each row in the table, enter a **Function name** (`myfun`, for example) and a space-separated or comma-separated list of the names of its input **Arguments** (`x y`, for example).

ADVANCED

Enter a value in the **Initialization data** field. The value is sent to the library when it is loaded. Select the **Thread safe** check box to declare that the function is a thread-safe pure function (that is, a function that always returns the same

results using the same input argument values and that does not have any side effects or output). Select this check box to improve performance.

Gaussian Pulse

The **Gaussian Pulse** function ( ) is the common bell-shaped curve (Gaussian function). It has a shape that is similar to a Gaussian (normal) distribution. The default **Function name** is `gp1`.

The Gaussian pulse has the same characteristics as the normal distribution: it is a pulse with a shape that is similar to a normal or Gaussian distribution as a function:

$$y(x)=\frac{1}{n}e^{\frac{-(x-x_0)^2}{2\sigma^2}}$$

In the equation above, x is the input variable, x_0 is the location (mean), and σ is the standard deviation. The normalization factor n is equal to 1 for peak value normalization and $\sigma\sqrt{2\pi}$ for integral normalization. This function is a function of one variable (the time t, for example).

PARAMETERS

Enter a **Location** value for the Gaussian pulse mean x_0 (the default location is 0). Enter a **Standard deviation** σ of the normal distribution. The default is 1. Choose a **Normalization** method: **Integral** (the default) or **Peak value**. The latter option can be useful if the maximum value of the pulse becomes very large, which may upset nonlinear equations. You can then choose **Peak value** to normalize the Gaussian pulse so that its maximum, rather than its integral, is 1.

- If you have the RF Module, see *Transient Modeling of a Coaxial Cable*: Application Library path **RF_Module/Verification_Examples/coaxial_cable_transient**.
- If you have the Chemical Reaction Engineering Module, see *Protein Adsorption*: Application Library path **Chemical_Reaction_Engineering_Module/Mixing_and_Separation/protein_adsorption**.

Image

The **Image** function ( ) makes it possible to import an image (in BMP, JPEG, PNG, or GIF format) and map the image's RGB (red, green, blue) data to a scalar (single channel) function output value. By default the function's output uses the mapping (R+G+B)/3.

The default **Function name** is `im1`. An image is defined on a two-dimensional domain, and you typically call the image function using spatial coordinates: `im1(x,y)`.

- See Function Names and Calling Functions for information about the **Function name** section.
- See Common Settings for the Function Nodes for information about the **Units** section.

FILE

Enter the path and name of the image file in the **Filename** text field, or click **Browse** to select an image file in the **Image** dialog box. Click **Import** to import the image in the specified image file into the model; otherwise, COMSOL Multiphysics references the image on your file system. When you have imported the image, the **File** section, under **Data imported into model**, contains information about the image's filename and size. Click **Export** to save the image to a file and reference it from there instead of keeping it in the model. Click the **Discard** button to delete the imported image data from the model. Click the **Refresh** button to reread the file.

COORDINATES

Define the 2D coordinates and if required, flip the image. Select the **In place** check box to use the pixels in the image as the coordinates. Click to clear the check box to define the image coordinates explicitly using the **x minimum**, **x maximum**, **y minimum**, and **y maximum** fields. Select the **Flip horizontally** check box to flip the image horizontally from left to right and vice versa. Select the **Flip vertically** check box to flip the image vertically from up to down and vice versa.

COLOR SCALING

From the **Scaling** list, select **Automatic** (the default) to use the default scaling, which outputs the mean of the RGB values for each pixel in the image. Select **Manual** to specify a custom expression for the scalar image function output value in the **Expression** field. The default is `(r+g+b)/3`, which is the automatic scaling, giving a scalar value that is the mean of the RGB values in each pixel.

For interpolation in the image, select an **Interpolation** method from the list: **Nearest neighbor** or **Linear** (the default).

For extrapolation of values that are outside the range in the image, select an **Extrapolation** method from the list: **Constant** (the default), **Linear**, **Nearest function** (which evaluates the function from the closes grid point at the actual point where a value is requested), or **Specific value**. If **Specific value** is selected, enter a value in the **Value outside range** field (default value: 0).

CLIPPING

Apply clipping to create a box-shaped region inside of the original image where the image is rendered. From the **Clipping** list, select **None** (the default) for no clipping, or **Manual** to define the box-shaped region using the **x minimum**, **x maximum**, **y minimum**, and **y maximum** fields (unit: px). The default **x maximum** and **y maximum** values are both 1000 px; the default minimum values are 0.

Interpolation

An **Interpolation** function ( ) is defined by a table or file containing the values of the function in discrete points. The interpolation data can be structured (defined on a grid) or unstructured (defined on a generic point cloud).

	The Analytic, Interpolation, and Piecewise functions can also be added to Materials. See Using Functions in Materials.

DEFINITION

Select a **Data source** — **File**, **Local table** (the default), or **Result table** to define the interpolation function by entering values in a table or by importing interpolation data from a file or from a table under **Results**, respectively.

	The data source for the interpolation must contain real-valued data only.

- If **Local table** is selected, enter a **Function name** and enter coordinates t and function values $f(t)$ into the table cells. A function of one variable can be defined in this way. For functions of two or more variables, such as space-dependent data in 2D and 3D, use a file with the function data. The default **Function name** is `int1`. You can move

rows up and down in the table, remove a row from the table, and clear the table using the buttons underneath the table.

- *Optional*: Save the parameters to a text file to reuse in other models. Click the **Save to File** button ( ) and enter a **File name**, including the extension .txt. Click to **Save** the text file. The information is saved in space-separated columns in the same order as displayed on screen.
- *Optional*: Import or Load data from a spreadsheet program or other format by saving the file with a .txt extension. Data must be separated by tabs or colons. Click the **Load from File** button ( ) and navigate to the text (.txt) file to load and click **Open**. If the license includes LiveLink™ *for* Excel® you can also load interpolation data from a Microsoft Excel Workbook spreadsheet. The data loads to the table. If there is other data already in the table, it adds it after the last row. Move or edit as needed.

- If **File** is selected to import interpolation data from a file, select a **Data format**: **Spreadsheet**, **Grid**, or **Sectionwise**. If the license includes LiveLink™ *for* Excel®, you can also import interpolation data from a Microsoft® Excel Workbook spreadsheet. COMSOL Multiphysics then uses the spreadsheet format and the **Data format** list is not available.
  - When the data format is specified, enter the complete network path and name of the interpolation data file in the **Filename** field, or click **Browse** to select a text or data file with interpolation data in the **Interpolation Data** dialog box. Then click **Import** to import the interpolation data into the model; otherwise COMSOL Multiphysics references the interpolation data on your file system. When you have imported the interpolation data, the **Parameters** section, under **Data imported into model**, contains information about the filename, data type, and dimension for the data. Click **Export** to save the interpolation data to a file and reference from there instead of including it in the model. Click the **Discard** button to delete the imported interpolation data from the model. Click the **Refresh** button to reread the file.
  - From the **Data format** list select **Spreadsheet**, **Grid**, or **Sectionwise**. The spreadsheet format is the default format, and that format is the easiest to use for functions defined on an unstructured grid or for general tabulated function values with one or more arguments.
- If **Result table** is selected, interpolation data evaluated or imported into a table under **Results>Tables** or belonging to an Evaluation Group under **Results** is treated in the same way as a file using the spreadsheet format.

If the interpolation data is given on spreadsheet format and when using a result table, enter a **Number of arguments** (1–3). For all data formats and table sources, enter information about the functions into the table. Add a **Function name** and its **Position in file**. The first function in the file has position 1, the following has position 2, and so on. For spreadsheet data, the first columns contain the arguments (typically spatial coordinates); the following columns can contain one or more functions, and the positions entered are the relative position for each function's data column.

For unstructured interpolation data, COMSOL Multiphysics may internally apply a scaling of the coordinates of the data points to simplify the process of creating an interpolation mesh. Use the **Internal scaling of data points** list to control this functionality. Select **Automatic** (the default) to apply the scaling if the bounding box of the interpolation points has a bad aspect ratio, **On** to always apply the scaling, or **Off** to turn off scaling altogether. Changing the scaling strategy may affect the generated interpolation mesh. The **Internal scaling of data points** list is only available when unstructured interpolation data can be entered (that is, when **Spreadsheet** or **Result table** is the data source).

For the common case where the data source contains function values that are functions of the spatial coordinates, select the **Use spatial coordinates as arguments** check box. Then select the frame to which the spatial coordinates are attached from the **Frame** list (the default is **Spatial** for the spatial frame). Then the function can be called without arguments when used in the model; the spatial coordinates are added as function arguments automatically. The

Use spatial coordinates as arguments check box is available for **Interpolation** nodes in a **Component** branch when the **Data source** is **File** or when using a **Table** in 1D models.

	The Interpolation functions support 1, 2, or 3 arguments. You cannot define functions with more than three (3) arguments because the algorithm creates a mesh for the point cloud, which is not possible in four dimensions or higher.

An Example of Importing a File Data Source into a Parameter Table

The file named `temp.txt` contains temperature measurements in nine points in the plane:

```
10 3 310
20 3 309
30 3 314
10 6 302
20 6 307
30 6 311
10 9 307
20 9 308
30 9 314
```

The data columns contain x-coordinates, y-coordinates, and temperature values, respectively. To use this file as an interpolation function called `tempfun`, perform the following steps.

1. Select **File** from the **Data source** list.
2. Enter a **Filename** (the complete network path) or **Browse** to locate a file to import.
3. From the **Data format** list select **Spreadsheet**.
4. Enter a **Number of arguments**. In this example, enter `2`.
5. Enter the **Function** name `tempfun`.
6. Enter its **Position in file** as `1`. The first function in the file has position 1, the following has position 2, and so on. The position in file for a function is the column after the spatial coordinates (or other function arguments) where it is defined. In this example with two arguments (spatial coordinates), the third column is Position 1 in the file.
7. If desired, adjust the interpolation and extrapolation settings in the **Interpolation and Extrapolation** section (see below).

Use the function `tempfun` with `x` and `y` as input arguments in a 2D model to get the interpolated value for the temperature at any position. If the **Use spatial coordinates as arguments** check box is selected, use `tempfun` without adding the input arguments.

Examples of Spreadsheet, Sectionwise, and Grid File Formats

In all file formats, use a `%` (percent) sign to indicate a comment line. Values and indices can be separated by space, comma, semicolon, or tab characters.

Spreadsheet File A *spreadsheet* file contains function data for space-dependent functions or general input variables and function values for functions of one or more variables (that is, the functions do not need to be functions of space coordinates but can also be functions of something else, such as temperature).

```
%Header (optional)
Columns containing x, y (optional), and z (optional), or any other arguments, followed
by function data columns.
```

The number of input variable data columns can be 1, 2, or 3 with no limit on the number of subsequent function data columns.

Sectionwise File A *sectionwise* file has coordinates and function values. The sectionwise format can be used for exporting results and for importing numerical data defined on an unstructured first-order tetrahedral mesh (triangular mesh in 2D) as interpolation table data. It is also possible to use this format in 1D and can then, contrary to the spreadsheet format, be used for 1D geometries with disconnected intervals. It cannot be used directly for defining a geometry or mesh. A sectionwise file contains unstructured mesh and function data for space-dependent functions. The functions need not be functions of space coordinates (x, y, and z) but can also be functions of some other quantities, such as deformation or temperature. The row indices in the format below are 1-based indices.

```
%Coordinates
One to three columns containing x, y (optional), and z (optional) coordinate values
or other input variable values
%Elements
Triangulation where each row contains the row indices of the points in the Coordinates
section for one element(edge, triangular, or tetrahedral)
%Data (funname)
Column of data values for each point
```

It is possible to include more than one function in the file as long as a `%Data` header separates them one from the other.

Grid File A *grid* file contains data values on a grid. You supply the grid points as x coordinate values (in 1D), x and y coordinate values in 2D, and x, y, and z coordinate values in 3D.

```
%Grid
x grid points separated by spaces, commas, semicolons, or tab charaters
y grid points separated by spaces,commas, semicolons, or tab charaters (optional)
z grid points separated by spaces,commas, semicolons, or tab charaters (optional)
%Data
Data values separated by spaces, commas, semicolons, or tab charaters
```

The grid coordinate section list the unique coordinate values. Each data row contains values for different x grid points for fixed values of y and z (in 3D). The rows first increase the y grid value and then the z grid value. The grid points can also represent another independent variable that the data values depend on. For example, the "grid points" can be temperature values and the data values the thermal conductivity at these temperatures.

It is possible to include more than one function in the file as long as a `%Data` header separates them one from the other. For grid points that are outside of the computational mesh, the data values will be `NaN`.

!	It is important to use a comment line starting with `%` to separate the grid points or other interpolation points and the data values that are associated with these coordinates or interpolation points.

INTERPOLATION AND EXTRAPOLATION

The interpolation and extrapolation settings control how the program evaluates the function between the discrete points where it is defined by the table or file, and the behavior of the function outside the domain where it is defined by the table or file.

Select an **Interpolation** method:

- For functions of one variable select **Nearest neighbor**, **Linear** (the default interpolation method), **Piecewise cubic**, or **Cubic spline**.
  - **Nearest neighbor** interpolation selects the value of the nearest point where the function is defined.
  - **Linear interpolation** uses a linear polynomial to interpolate the function between the points where it is defined.
  - **Piecewise cubic** interpolation uses a piecewise-cubic Hermite polynomial with continuous first derivatives. It preserves the shape of the data and respects monotonicity.
  - The **Cubic spline** method also performs interpolation with a piecewise cubic polynomial. Here, even second derivatives are continuous; however, the method does not necessarily respect monotonicity.
- For functions of more than one variable, select **Nearest neighbor** or **Linear**. The other options are not supported.

Select an **Extrapolation** method to specify how to treat arguments outside the grid or mesh of points.

- **Constant**. Uses the value from the closest point inside the grid (for structured interpolation) or the value from the closest mesh element (for unstructured interpolation). The function evaluates the polynomial from the closest grid point at the actual point where a value is requested. This is the default extrapolation method.

	For interpolation functions with three arguments, the Constant method will not reliably find the closest mesh element. It will find some point on the boundary of the interpolation mesh.

- **Linear**. The function is linear outside the grid with a continuous function value and continuous first derivative at the boundary of the grid. **Piecewise cubic** or **Cubic spline** must be selected from the **Interpolation** list.
- **Nearest function**. Evaluates the polynomial from the closest grid point at the actual point where a value is requested.
- **Specific value**. Uses a single value, such as zero or NaN (Not-a-Number), everywhere outside the grid or mesh. Enter the value in the **Values outside range** field.

	Unstructured extrapolation supports a constant or a specific value only.

PLOT PARAMETERS

If you have selected to define the inverse function (see below), this section becomes available. Select the **Plot the inverse function** check box to plot the inverse function instead of the interpolation function itself when you click the **Plot** button ( ) to generate a preview plot.

A plot group for an interpolation function contains three connected line graphs: a line graph of the piecewise function and two line graphs using dashed red lines, Left Extrapolation and Right Extrapolation, which show how the selected extrapolation extends the interpolation function on both sides. In addition, a point graph shows the interpolation points (interpolation nodes).

RELATED FUNCTIONS

In this section, you can define the following related functions:

Inverse Function

The inverse function is available for interpolation functions defined by a local table only. If you want to define the inverse function f^{-1} for the interpolation function f, select the **Define inverse function** check box and enter a function name for the inverse function in the **Inverse function name** field (the default is the name of the interpolation function with a suffix `_inv`). If you want to plot the inverse function instead of the interpolation function itself, first select

the **Plot the inverse function** check box in the **Plot Parameters** sections, which is only available when you have chosen to define the inverse function.

The inverse function only exists if the function is strictly monotonic.

Primitive Function

If you want to define the primitive function F for the interpolation function f, select the **Define primitive function** check box and enter a function name for the primitive function in the **Primitive function name** field (the default is the name of the interpolation function with a suffix `_prim`). You can use the primitive function to sample from the interpolation function. The primitive function is the integral of the interpolation function. The integration constant is such that the value of the primitive function is zero at the first data point. In other words, if the interpolation function is $f(x)$, then the primitive function is

$$F(x) = \int_{x_0}^{x} f(y)\,dy$$

where x_0 is the x-coordinate of the first data point.

Random Function

To define a random function, select the **Define random function** check box with a name that you specify in the **Random function name** field (the default for an interpolation function `int1` is `rn_int1`). You can use this function to sample from the interpolation function. A random functions can be useful in particle tracing, for example. Suppose, for example, that you want to specify an arbitrary energy distribution function for the initial energy of a bunch of particles. In order to do this, you need to randomly sample from an interpolation function, not merely call it. The random function makes this possible. To use a random function for this purpose, select the **Define random function** check box, and then call it in an Inlet feature, for example, using `rn_int1(cpt.pidx)`, where `cpt.pidx` is a variable that is uniquely valued for each particle.

The default number of arguments is 1. If you want to use additional arguments, type a number in the **Number of arguments** field.

You specify the range of the random function using the **Range** list. The default is **Automatic**. Choose **Manual** to provide limits in the **Lower limit** and **Upper limit** fields.

See Common Settings for the Function Nodes for information about the **Units** section.

If you have the:

- Acoustics Module, see *Muffler with Perforates*: Application Library path **Acoustics_Module/Automotive/perforated_muffler**.
- CFD Module, see *Transonic Flow in a Sajben Diffuser*: Application Library path **CFD_Module/High_Mach_Number_Flow/sajben_diffuser**.
- Corrosion Module, see *Cathodic Protection of Steel in Reinforced Concrete*: Application Library path **Corrosion_Module/Cathodic_Protection/cathodic_protection_in_concrete**.
- Heat Transfer Module, see *Temperature Field in a Cooling Flange*: Application Library path **Heat_Transfer_Module/Thermal_Processing/cooling_flange**.
- Pipe Flow Module, see *Geothermal Heating from a Pond Loop*: Application Library path **Pipe_Flow_Module/Heat_Transfer/geothermal_heating**.

MATLAB

A LiveLink™ *for* MATLAB® license is required. Also confirm that MATLAB® is installed on the same computer as COMSOL Multiphysics.

Use a **MATLAB** functions node ( ) from COMSOL Multiphysics to interface to functions written in MATLAB. These functions can be used as any other function defined in COMSOL Multiphysics. MATLAB functions are evaluated in MATLAB.

FUNCTIONS

Under **Functions**, add the names of the MATLAB functions in the **Function name** column, and for each function in the table, enter a space-separated or comma-separated list of the names of its input **Arguments** (`x y`, for example).

Any function that you want to call using a MATLAB node must fulfill the following requirements:

- It can take any number of inputs as vectors and must return a single output vector.
- The input vectors can be of arbitrary size, but in a single call the inputs vectors must all have the same size. The returned vector must have exactly the same size as the input vectors.

For example, functions such as `+` and `-` (plus and minus) work well on vector inputs, but matrix multiplication (`*`, `mtimes`) and matrix power (`^`, `mpower`) do not. Instead, use the elementwise array operators `.*` and `.^`.

Click the **Clear Functions** button to force a reload of the functions if they have been edited or if you have changed the security preferences. Alternatively, you can select the **Clear functions automatically before solving** check box.

- Go to Common Settings for the Function Nodes for information about the **Derivatives** and **Plot Parameters** sections.
- The *LiveLink™ for MATLAB® User's Guide*

Piecewise

A **Piecewise** function ( ) is created by splicing together several functions, each defined on one interval. Define the argument, extrapolation and smoothing methods, and the functions and their intervals. The piecewise function

is a function of one variable with different definitions on different intervals, which must not overlap or have any holes between them. The default **Function name** is `pw1`.

	The Analytic, Interpolation, and Piecewise functions can also be added to Materials. See Using Functions in Materials.

DEFINITION

Enter a name for the argument to the piecewise function in the **Argument** field.

Select an **Extrapolation** method to control what happens when the function is evaluated in a point that does not belong to any interval: **Constant** (the default), **None**, **Nearest function**, **Specific value**, or **Periodic**.

- **Constant**. Uses the function value from the endpoint of the closest interval. Uses the value from the starting point of the first and the endpoint of the last interval on the corresponding sides.
- **None**. Evaluation fails outside of the intervals where it is defined. Trying to evaluate the function generates an error and evaluates to NaN (Not-a-Number).
- **Nearest function**. Evaluate the function from the closest interval. The function at the first or last interval (depending of the side) is used to evaluate at the actual point where a value is requested.
- **Specific value**. Also enter a value in the **Value outside range** field. If selecting the specific-number method, assign a single value (usually zero or NaN) to all points outside the intervals.
- **Periodic**. The function becomes periodic by repeating its values in the interval where it is defined in regular intervals of the same size.

Select a **Smoothing**: **No smoothing** (the default), **Continuous function** (to make the function continuous but not its derivatives), **Continuous first derivative**, or **Continuous second derivative**. For any selection (except **No smoothing**), enter a value in the **Size of transition zone** field (dimensionless). The default is 0.1. Using the **Transition zone** list you can select if the size should be relative or absolute. **Relative size** (the default) means that the size is relative in relation to the size of the intervals on both sides of the border. **Absolute size** gives smoothing on an interval that is symmetric around the border. If you have chosen to use smoothing and the **Extrapolation** is **Constant**, **Specific value**, or **Periodic**, a **Smooth at endpoints** check box appears. Select that check box if you want to smooth at the endpoints — that is, the left endpoint of the leftmost interval and the right endpoint of rightmost interval.

	The functions in contiguous intervals need not evaluate to the same value where the intervals meet. If the values differ the function has a discontinuity, and it is recommended that you apply smoothing to make the piecewise function more well-behaved numerically. Functions from neighboring intervals are then blended close to where the intervals meet.

For each cell in the **Intervals** table, enter **Start** and **End** interval limits. The intervals must not overlap, and there cannot be any holes between intervals. Enter an expression defining the **Function**.

!	The intervals must be contiguous.

A plot group for a piecewise function contains three connected line graphs: a line graph of the piecewise function and two line graphs using dashed red lines, Left Extrapolation and Right Extrapolation, that show how the selected extrapolation extends the piecewise function on both sides.

	See Common Settings for the Function Nodes for information about the **Units** section.

	With the Heat Transfer Module, see *Radiative Heat Transfer in a Utility Boiler*: Application Library path **Heat_Transfer_Module/Thermal_Radiation/boiler**.

Ramp

A **Ramp** function ( ) is a linear increase with a user-defined slope that begins at some specified time. The ramp function is a function of one variable (the time t, for example). The default **Function name** is `rm1`.

	• See Function Names and Calling Functions for information about the **Function name** section. • See Common Settings for the Function Nodes for information about the **Smoothing** section.

PARAMETERS

Enter a **Location** value s_0 for the start of the ramp. The function evaluates to 0 for values less than its start location and increases linearly for values greater than the location.

	If the **Smooth at start** check box is selected under **Smoothing**, then the **Ramp** function can become nonzero at some time before the location value. A model might not solve due to the possible inconsistencies between the ramp excitation and the initial condition (for example, the initial condition is zero, but the ramp function returns a small nonzero value at the starting time for the simulation).

Enter a **Slope** k (dimensionless) of the ramp. The default is 1.

To ensure that the value never exceeds a certain point, select the **Cutoff** check box and enter a value. The default is 1. For an input variable s, a start location s_0, and a slope k, the ramp function's value is 0 for $s<s_0$ and $k(s-s_0)$ for $s\geq s_0$.

Random

A **Random** function ( ) generates white noise with uniform or normal distribution and has one or more arguments to simulate white noise. Its distribution is either uniform or normal. The default **Function name** is `rn1`.

To generate a random function of the spatial coordinates x, y, and z, for example, use this function with three input variables; it returns the same value each time it is called for a given set of input arguments.

	See Function Names and Calling Functions for information about the **Function name** section.

PARAMETERS

Enter a **Number of arguments** to the random function (the default is 1). Select a **Distribution** method: **Uniform** (the default) or **Normal**. If **Uniform** is selected, enter a **Mean** and **Range**. The default mean and range is 0 and 1, respectively. The range is the difference between the largest and smallest values that the function can return. If **Normal** is selected, enter a **Mean** and **Standard deviation**. The defaults are 0 and 1, respectively.

If you need to create several random functions that return independent random values, select the **Use random seed** check box and make sure that the functions have different random seeds in the **Random seed** field. By default, different random functions will have different random seeds. The random seed can also be used to do Monte Carlo simulations. Enter a parameter as random seed and let the parameter vary during a parametric sweep.

Rectangle

A **Rectangle** function (⎍) is `1` in an interval and `0` everywhere else. This function (also called top hat or boxcar) is useful for band-pass filtering; you can use it to select values within an interval. It can also simulate a signal that is turned on during an interval or a load that is active on a part of a boundary, for example. The rectangle function is a function of one variable (the time t, for example). The default **Function name** is `rect1`.

LIMITS

Enter a **Lower limit** (the default is –0.5) and **Upper limit** (the default is 0.5) to specify the interval for the rectangle function. For example, if the input argument is time, enter a start and end time. This function evaluates to 1 for values within the interval from the lower limit to the upper limit. Outside the interval it evaluates to 0.

- See Function Names and Calling Functions for information about the **Function name** section.
- See Common Settings for the Function Nodes for information about the **Smoothing** section.

If you have the Batteries & Fuel Cells Module, see *Soluble Lead-Acid Redox Flow Battery*: Application Library path **Batteries_and_Fuel_Cells_Module/Flow_Batteries/pb_flow_battery**.

Step

A **Step** function (⎍) is a sharp transition from `0` to some other value (amplitude) at some location (a certain time, for example). Create a single step function with a certain amplitude from an initial level to a final level at a start location. The step function is a function of one variable (the time t, for example). The default **Function name** is `step1`.

PARAMETERS

Enter a **Location** (s_0) for the start of the step. The value of the step function is the start level for input values that are smaller than the location of the step. In the **From** field, enter a start level (L_{start}). In the **To** field, enter a final level (L_{end}). For an input variable s, a start location s_0, a start level L_{start}, and a final level L_{end}, the step function's value is L_{start} for $s < s_0$ and L_{end} for $s \geq s_0$. The amplitude of the step is $L_{\text{end}} - L_{\text{start}}$.

- See Function Names and Calling Functions for information about the **Function name** section.
- See Common Settings for the Function Nodes for information about the **Smoothing** section.

Thermodynamics Property Package

COMSOL Multiphysics provides a **Property Package** feature (if a compliant thermodynamics property package of a supported type is installed) to enable the linking to external physical and thermodynamic property calculations for use in the Chemical Reaction Engineering Module.

For more information see the *Chemical Reaction Engineering Module User's Guide*.

Triangle

A **Triangle** function ( ) is a linear increase and linear decline within an interval and `0` everywhere else. You can use the triangle function for band-pass filtering, for example; that is, use it to select values within an interval. The triangle function is a function of one variable (the time t, for example). The default **Function name** is `tri1`.

PARAMETERS

Enter a **Lower limit** (the default is –0.5) and **Upper limit** (the default is 0.5) to specify the interval for the triangle function. For example, if the input argument is time, enter a start and end time. In the midpoint of the interval, this function evaluates to 1, and moving toward the interval boundaries it falls off to 0. Outside the interval it evaluates to 0.

- See Function Names and Calling Functions for information about the **Function name** section.
- See Common Settings for the Function Nodes for information about the **Smoothing** section.

Waveform

A **Waveform** function ( ) is a periodic function with one of several characteristic shapes: sawtooth, sine, square, or triangle. The waveform function is a function of one variable (the time t, for example). The default **Function name** is `wv`.

See Function Names and Calling Functions for more information about the **Function name** section.

PARAMETERS

Select a waveform **Type**: **Sawtooth**, **Sine** (the default), **Square**, or **Triangle**. For any selection, enter **Angular frequency** (default is 1), **Phase** (unit: radians; the default is 0), and **Amplitude** (default is 1) values. For the **Square** and **Triangle** waveforms, you can also specify the **Duty cycle** (the ratio between the pulse duration and the period). The default value is 0.5. The duty cycle is the fraction (that is, a value between 0 and 1) of a period in which the function has the high value (for a Square waveform) or for which the function is rising (for a Triangle waveform).

With the Batteries & Fuel Cells Module, see *1D Lithium-Ion Battery for Thermal Models*: Application Library path **Batteries_and_Fuel_Cells_Module/Thermal_Management/li_battery_1d_for_thermal_models**.

Specifying Discontinuous Functions

To specify a discontinuous function, such as a step in space or time, you can use logical functions that evaluate to 1 if true and 0 otherwise. For instance, the following function defines a sine wave that exists for 10 seconds and afterward takes the value 0:

```
sin(2*pi*t)*(t<10)
```

If a coefficient or a material property contains a step function or some other discontinuity, convergence problems can arise. For time-dependent problems, the time-stepping algorithm can run into problems. For stationary problems, mesh-resolution issues can arise such as overshooting or undershooting of the solution due to infinite flux problems. To avoid problems with a discontinuity, replace it with a smoothed step function that emulates steps. Doing so serves two purposes:

- Numerical reliability and convergence are improved.
- What is thought of as a step function is, in reality, a smoothed continuous function because of inertia.

SMOOTHING OF DISCONTINUOUS FUNCTIONS

The easiest way to create a smooth step is to use the predefined Step function. It includes smoothing by default. The Piecewise, Ramp, Rectangle, and Triangle functions also include smoothing (active by default for Rectangle and Triangle functions). Smoothed Step and Rectangle functions are defined by piecewise 5th-degree polynomials, smoothed Ramp functions by piecewise 4th-degree polynomials, and smoothed Triangle functions by piecewise 3rd-degree polynomials. None of these functions have any overshoot or undershoot.

ADDITIONAL SMOOTHED FUNCTIONS

In addition, the following smoothed functions are available:

- `flsmhs`, a smoothed step function, or *Heaviside function*, with a continuous first derivative and overshoot on both sides of the step. The overshoot ensures that the integral from 0 to infinity is correct. `y=flsmhs(x,scale)` approximates the logical expression `y = (x>0)` by smoothing the transition within the interval $-\text{scale} < x < \text{scale}$; that is, the scale value is half of the smoothing zone s. `fldsmhs` is the derivative of the smoothed Heaviside function.
- `flsmsign`, a smoothed sign function with a continuous first derivative. `y = flsmsign(x,scale)` approximates the function `y = sign(x)` by smoothing the transition within the interval $-\text{scale} < x < \text{scale}$. `fldsmsign` is the derivative of the smoothed sign function.
- `flc1hs`, a smoothed Heaviside function with a continuous first derivative without overshoot. Its syntax is similar to the functions just described. The definition of `flc1hs` is the following:
  - `flc1hs(x,d)` $= 0$, if $x \le -d$
  - `flc1hs(x,d)` $= 1$, if $x \ge d$
  - `flc1hs(x,d)` $= 0.5 + 0.75\cdot(x/d) - 0.25\cdot(x/d)^3$
- `flc2hs`, a smoothed Heaviside function with a continuous second derivative without overshoot. Its syntax is similar to the functions just described. The definition of `flc2hs` is the following:
  - `flc2hs(x,d)` $= 0$, if $x \le -d$
  - `flc2hs(x,d)` $= 1$, if $x \ge d$
  - `flc2hs(x,d)` $= 0.5 + 0.9375\cdot(x/d) - 0.625\cdot(x/d)^3 + 0.1875\cdot(x/d)^5$

To create a smoothed rectangle over an interval $[a, b]$ with one continuous derivative and a smoothing zone s, use `flc1hs(x-a,0.5*s)-flc1hs(x-b,0.5*s)`. Similarly, you define a smoothed rectangle over an interval $[a, b]$ with two continuous derivatives and a smoothing zone s using `flc2hs(x-a,0.5*s)-flc2hs(x-b,0.5*s)`.

These functions can be useful as a complement and extension to the predefined Step function. In the interval `-scale<x<scale`, the functions `flsmhs` and `flsmsign` are defined by a 7th-degree polynomial chosen so that the 2nd derivative is continuous. Moreover, the moments of order 0, 1, and 2 agree with those for the Heaviside function and the sign function, respectively. This implies that the functions have small overshoots.

Now consider an example. Use `flc1hs` to model the heat capacity C_p of a phase-changing material. Assume that a crystalline material has a heat capacity of 1 kJ/kg. Its melting point at the present pressure is 273.15 K. The liquid phase has a heat capacity of 2 kJ/kg. Create a parameter `scale` with a value of 0.1 and then an **Analytic** node where an analytic function HeatCapacity is defined using the following expression with an argument `T`: `1+flc1hs(T-273,scale)`; then define a plot range of 272.5–273.5 K under **Plot Parameters** and click the **Plot** button in the **Settings** window for **Analytic** to plot C_p around the melting point.

Matrices and Matrix Operations

Variable names which are defined for use in modeling and postprocessing always represent scalar values. The variable evaluator used inside COMSOL Multiphysics does not recognize vectors, matrices, tensors or operations on such objects. Instead, all such expressions are written in terms of component variables, often with names derived from a common base name using an indexing convention. Under **Variable Utilities**, both in the **Global Defintions** branch and in the **Definitions** branch of each component, you will find a number of utilities for manipulating collections of variables or expressions as if they were the components of a vector, matrix or tensor. The output from these features are represented for use in equations and postprocessing as collections of scalar variables with a common base name, which can also be used in certain nodes under Results to evaluate the complete matrix at once.

To display the **Variable Utilities** node and its subnodes, click the **Show More Options** button ( ) or select it from the **Global Definition**s or **Definitions** nodes' context menu and select **Variable Utilities** in the **Show More Options** dialog box.

Matrix

Add a **Matrix** node (A) under **Definitions>Variable Utilities** (if **Group by Type** is active; otherwise, directly under **Definitions**) to define a square matrix of variables. You add it by right-clicking the **Definitions** node and choosing **Variable Utilities>Matrix** or by right-clicking the **Variable Utilities** node and choosing **Matrix**.

You can define a **Label** for the node and a base **Name** for the matrix. For the **Geometric Entity Selection**, see About Selecting Geometric Entities.

In addition, the **Settings** window for a **Matrix** node contains the following section:

INPUT MATRIX

Choose a **Matrix format**: **Full** (the default), **Symmetric**, or **Hermitian**. For a symmetric or Hermitian matrix, you only enter the upper-triangular part of the matrix. A Hermitian matrix (or self-adjoint matrix) is a complex square matrix that is equal to its own conjugate transpose. From the **Matrix size** list, choose a matrix size from 1x1 to 9x9; then enter the matrix elements in the table below.

The matrix is available as a list of variables with names `<name><i><j>`, where `<name>` is the namespace set in the **Name** field, and `<i>` and `<j>` are integer indices. You can use individual components where variable expressions are allowed, but also evaluate all variables at once using a matrix evaluation node under **Derived Values**. For example, select **T1** under **Model>Component 1>Definitions>Matrix variables**, if the matrix has been defined with the name **T1** in **Component 1**.

Matrix Inverse

Add a **Matrix Inverse** node (A^{-1}) under **Definitions>Variable Utilities** (if **Group by Type** is active; otherwise, directly under **Definitions**) to define a matrix of variables as the inverse of a square input matrix. You add it by right-clicking the **Definitions** node and choosing **Variable Utilities>Matrix Inverse** or by right-clicking the **Variable Utilities** node and choosing **Matrix Inverse**.

You can define a **Label** for the node, and a namespace for variables using the **Name** field. For the **Geometric Entity Selection**, see About Selecting Geometric Entities.

In addition, the **Settings** window for a **Matrix Inverse** node contains the following section:

INPUT MATRIX

In this section, you define the input matrix to invert. Choose a **Matrix format**: **Full** (the default), **Symmetric**, or **Hermitian**. For a symmetric or Hermitian matrix, you only enter the upper-triangular part of the matrix. A Hermitian matrix (or self-adjoint matrix) is a complex square matrix that is equal to its own conjugate transpose. From the **Matrix size** list, choose a matrix size from 1x1 to 9x9; the enter the matrix elements in the table below.

The resulting matrix inverse is available as a list of scalar variables with names `<name>.invT<i><j>`, where `<name>` is the namespace set in the **Name** field, and `<i>` and `<j>` are integer indices. The input matrix with names `<name>.T<i><j>`, as well as the matrix determinant `<name>.detT` are also made available. Note that the determinant is not computed for matrices of size 4x4 or larger; if required, use a **Matrix Decomposition** node instead.

You can use individual components where variable expressions are allowed, but also evaluate all variables at once using a matrix evaluation node under **Derived Values.** For example, select **matinv1.invT** under **Model>Component 1>Definitions>Matrix Inverse 1>Matrix inverse** if it the node has been defined as **Matrix Inverse 1** with the name **matinv1** in **Component 1**.

Matrix Diagonalization

Add a **Matrix Diagonalization** node (ADA^{-1}) under **Definitions>Variable Utilities** (if **Group by Type** is active; otherwise, directly under **Definitions**) to define variables representing the diagonalization of a symmetric 3x3 input matrix. You add it by right-clicking the **Definitions** node and choosing **Variable Utilities>Matrix Diagonalization** or by right-clicking the **Variable Utilities** node and choosing **Matrix Diagonalization**.

You can define a **Label** for the node, and a namespace for variables using the **Name** field. For the **Geometric Entity Selection**, see About Selecting Geometric Entities.

In addition, the **Settings** window for a **Matrix Diagonalization** node contains the following sections:

INPUT MATRIX

Enter the symmetric matrix elements for the 3x3 input matrix in the table. The matrix diagonalization is primarily intended for extracting principal components of 3D tensor quantities such as principal stresses and strains.

OUTPUT

Select the **Compute exponential** check box to compute also the matrix $e^{\mathbf{T}}$, where $\mathbf{T}$ is the input matrix.

Select the **Ignore Jacobian contributions** check box (selected by default) to ignore any solution dependencies during the solution process.

The principal values become available as variables `<name>.e<i>`, where `<name>` is the namespace set in the **Name** field, and `<i>` is the principal component index, ordered from largest to smallest absolute value. Components of the corresponding principal vectors are called `<name>.e<i><j>`, where `<j>` are integer indices. If **Compute exponential** was selected, the result can be evaluated as a list of variables with names `<name>.expT<i><j>`. The input matrix with names `<name>.T<i><j>`, as well as its determinant `<name>.detT` are also made available. Note that the determinant is not computed for matrices of size 4x4 or larger; if required, use a **Matrix Decomposition** node instead.

You can use individual components where variable expressions are allowed, but also evaluate complete vectors and matrices at once using a matrix evaluation node under **Derived Values.** For example, to evaluate the first principal vector, select **matdiag1.e1_vec** under **Model>Component 1>Definitions>Matrix Diagonalization 1>Principal vector 1** if it the node has been defined as **Matrix Diagonalization 1** with the name **matdiag1** in **Component 1**.

Matrix Decomposition (SVD)

Add a **Matrix Decomposition (SVD)** node ($U\Sigma V^*$) under **Definitions>Variable Utilities** (if **Group by Type** is active; otherwise, directly under **Definitions**) to define variables for a decomposition using SVD (*singular value decomposition*) of a square input matrix. You add it by right-clicking the **Definitions** node and choosing **Variable Utilities>Matrix Decomposition (SVD)** or by right-clicking the **Variable Utilities** node and choosing **Matrix Decomposition (SVD)**.

You can define a **Label** for the node, and a namespace for variables using the **Name** field. For the **Geometric Entity Selection**, see About Selecting Geometric Entities.

In addition, the **Settings** window for a **Matrix Decomposition (SVD)** node contains the following sections:

INPUT MATRIX

Choose a **Matrix format**: **Full** (the default) or **Symmetric**. For a symmetric matrix, you only enter the upper-triangular part of the matrix. From the **Matrix size** list, choose a matrix size from 1x1 to 9x9; the enter the matrix elements in the table below.

OUTPUT

The **Matrix Decomposition (SVD)** node can compute two different decompositions of the input matrix. The basic singular value decomposition (SVD)

$$\mathbf{T} = \mathbf{U}\Sigma\mathbf{V}^*$$

splits the matrix as a product of a unitary matrix $\mathbf{U}$ (with left singular vectors as columns) a diagonal matrix Σ (with positive singular values on the diagonal), and the conjugate transpose of a unitary matrix $\mathbf{V}$ (with right singular vectors as columns). From the SVD, also a *polar decomposition*

$$\mathbf{T} = \mathbf{RP}$$

can be computed, where $\mathbf{R}$ is a unitary rotation matrix and $\mathbf{P}$ is a positive definite stretch matrix.

The node always computes the singular values, which are made available as variables `<name>.sigma<i>`, where `<name>` is the namespace set in the **Name** field, and `<i>` is the singular value index, ordered from largest to smallest. The input matrix with names `<name>.T<i><j>`, as well as the matrix determinant `<name>.detT` are also always defined.

In addition, all the following check boxes are selected by default to provide the corresponding matrices and vectors as output.

- Select the **Compute left singular vectors** check box to compute the left singular vectors and define corresponding variables `<name>.U<i><j>`, where index `<i>` corresponds to rows in the input matrix and `<j>` are principal value indices.
- Select the **Compute right singular vectors** check box to compute the right singular vectors and define corresponding variables `<name>.V<i><j>`, where index `<i>` corresponds to columns in the input matrix and `<j>` are principal value indices.
- Select the **Compute rotation matrix** check box to compute the *rotation matrix* and define corresponding variables `<name>.R<i><j>`, where index `<i>` corresponds to rows in the input matrix and `<j>` corresponds to columns.
- Select the **Compute stretch matrix** check box to compute the *stretch matrix* and define corresponding variables `<name>.P<i><j>`, where indices `<i>` and `<j>` corresponds to columns in the input matrix.

You can use individual components where variable expressions are allowed, but also evaluate complete vectors and matrices at once using a matrix evaluation node under **Derived Values.** For example, to evaluate the complete matrix

of right singular vectors, select **matdec1.V** under **Model>Component 1>Definitions>Matrix Decomposition (SVD) 1>Right singular vectors** if it the node has been defined as **Matrix Decomposition (SVD) 1** with the name **matdec1** in **Component 1**.

Vector Transform

Add a **Vector Transform** node ( ) to define variables representing the components of an input vector transformed to another coordinate system in a 3D vector space. You add it by right-clicking the **Definitions** node and choosing **Variable Utilities>Vector Transform**. If **Group by Type** has been selected for the **Definitions** branch, then you can also add it by right-clicking the **Variable Utilities** node and choosing **Vector Transform**.

Use the **Name** field to select a namespace for the input and output vector components, as well as for components of the transformation matrix.

In the **Domain Selection** section, select the domains in which this transformation is valid.

In addition, the **Settings** window for a **Vector Transform** node contains the following sections:

INPUT

In this section, you define the vector to be transformed. It can be defined as a new vector by manually entering expressions in the table or chosen from the postprocessing variables in the **Replace Expression** ( ) menu. When you use the **Replace Expression** tree, an attempt is made to infer the other settings in this section from the properties of the selected vector.

Choose a **Coordinate System** in which this vector is represented. For a manually entered vector, the default is the **Global spatial** system. When using **Replace Expression**, the default is inferred from the properties of the selected vector.

If the selected coordinate system is a *relative system* such that its reference frame cannot be deduced from its definition, select an appropriate **Reference frame**. This selection is only shown when a relative input system is selected.

If the relation between the input and output coordinate system is not a pure rotation, the **Treat components as** drop down is shown. Select whether the input vector components are covariant or contravariant. When using **Replace Expression**, the default is inferred from the properties of the selected vector.

OUTPUT

Select the **Coordinate system** in which the transformed vector will be represented. If the selected system is a relative system, also select a **Reference frame**.

The components of the transformed vector in the selected system become available as variables `<name>.v<xi>`, where `<name>` is the name of the node set in the **Name** field, and `<xi>` is the coordinate with index *i* in the output coordinate system. The components of the input vector also become available as variables `<name>.u<i>`. For example, if the **Vector Transform** node has the name **vectr1**, the first component of an input vector being transformed to the spatial frame becomes `vectr1.u1`, while the first component of the output vector becomes `vectr1.vx`. Both vectors also become available as vector objects which can be evaluated using a matrix evaluation node under **Derived Values** or selected as input for another Vector Transform.

The transformation matrix also becomes available as `<name>.T`. This matrix is the composition of all transformation matrices used. For example, if the indices were changed between covariant and contravariant at the same time as the coordinate system was changed, it is the product of the metric and a coordinate transformation matrix.

TRANSFORM SETTINGS

Choose **Transform as**, which determines how the input vector transforms between the chosen coordinate systems. If the option **Generalized vector density** is chosen, the choices of **Input volume reference** and **Output volume reference** for the change in volume between coordinate systems become available.

For more information about tensor properties, see Tensors in COMSOL Multiphysics.

Since you can use this option to choose the reference systems for the determinant of the Jacobian, it can be used to transform vectors as either vector densities or vector capacities. It can even be used to take into account the volume change between other coordinate systems. The **Vector** option transforms vectors as normal tensors, not taking into account the volume change. There are two other possible options: choosing the **Flux Vector** option automatically sets the volume references as for a vector density using the volume references implied by the selected input and output systems; analogously, choosing the **Directed Area Element** option automatically sets the volume references as for a vector capacity using the selected input and output systems.

ADVANCED

As a default, the output vector will have the same type of base as the input vector. You can force the representation of the output vector to be covariant or contravariant, independent of the form of the input vector. In order to do this, change **Component Change** from its default value **None**. Depending on how the indices were set in the **Input** section, the other options can be **Covariant->Contravariant** and **Contravariant->Covariant**. The index on the vector components will be raised or lowered accordingly.

When choosing anything other than **None**, the choice of which metric to use for the transformation becomes available. Here, choose the metric as either **Spatial** or **Material**.

Matrix Transform

Add a **Matrix Transform** node ( ) to define variables representing the components of an input matrix transformed to another coordinate system in a 3D vector space. You add it by right-clicking the **Definitions** node and choosing **Variable Utilities>Matrix Transform**. If **Group by Type** has been selected for the **Definitions** branch, then you can also add it by right-clicking the **Variable Utilities** node and choosing **Matrix Transform**.

Use the **Name** field to select a namespace for the input and output vector components, as well as for components of the transformation matrix.

In the **Domain Selection** section, select the domains in which this transformation is valid.

In addition, the **Settings** window for a **Matrix Transform** node contains the following sections:

INPUT

In this section, you define the matrix to be transformed. It can be defined as a new matrix by manually entering expressions in the table, or chosen from the postprocessing variables in the **Replace Expression** ( ) menu. When you use the **Replace Expression** tree, an attempt is made to infer the other settings in this section from the properties of the selected matrix.

The choice of **Matrix format**, **Full** or **Symmetric**, controls the available coordinate system settings. For a **Full** matrix (the default), you must specify both the **Row Coordinate System** and the **Column Coordinate System** in which this tensor is represented. For a **Symmetric** matrix, the row and column system must be the same and only a single **Coordinate system** setting is needed. When the matrix is entered manually, the default coordinate system settings are always the **Global spatial** system; when using **Replace Expression**, the default is inferred from the properties of the selected matrix.

If a selected coordinate system is a *relative system* such that its reference frame cannot be deduced from its definition, select an appropriate **Reference frame**. This selection is only shown when a relative input system is selected.

If the relation between an input coordinate system and a corresponding output coordinate system is not a pure rotation, you must specify a component type for each affected index. In the corresponding **Treat components as**, **Treat row indices as** or **Treat column indices as** drop down, select whether the corresponding input matrix index is **Covariant** or **Contravariant** (the default). When using **Replace Expression**, the default is inferred from the properties of the selected matrix.

OUTPUT

Select the **Row Coordinate System** and the **Column Coordinate System** in which the transformed matrix will be represented. Note that row and column system are set separately also when the input matrix is symmetric. To retain symmetry in the output components, select the same system for both row and column indices. If any of the selected systems is a relative system, also select a corresponding reference frame.

The components of the transformed matrix in those systems become available as variables `<name>.V<xi><xj>`, where `<name>` is the name of the node set in the **Name** field, and `<xi>` and `<xj>` are the coordinates with indices *i* and *j*. The components of the input matrix also become available as `<name>.U<i><j>`. For example, if the **Matrix Transform** node has the name **mattr1**, the first component of an input matrix being transformed to the spatial frame in both indices becomes `mattr1.U11`, while the first component of the output matrix becomes `mattr1.Vxx`. Both matrices also become available as matrix objects which can be evaluated using a matrix evaluation node under **Derived Values** or selected as input for another Matrix Transform.

The row transformation matrix also becomes available as `<name>.Tr`, while the column transformation matrix becomes available as `<name>.Tc`. These matrices are the composition of all transformation matrices used for the respective index. For example, if the column indices are changed between covariant and contravariant at the same time as the coordinate system for the columns is changed, the matrix `<name>.Tc` is the product of the metric and a coordinate transformation matrix.

TRANSFORM SETTINGS

Choose **Transform as**, which determines how the input matrix transforms between the chosen coordinate systems. If the option **Generalized tensor density** is chosen, the choices of **Input volume reference** and **Output volume reference** for the change in volume between coordinate systems become available.

For more information about tensor properties, see Tensors in COMSOL Multiphysics.

Since you can use this option to choose the reference systems for the determinant of the Jacobian, it can be used to transform matrices as either tensor densities or tensor capacities. It can even be used to take into account the volume change between other coordinate systems. The **Tensor** option transforms matrices as normal tensors, not taking into account the volume change. For convenience, there is one more option, called **Stress Tensor**. What it means is that the tensor transforms as a tensor density where the volume reference change is taken from the choice of input and output *column* coordinate systems.

ADVANCED

As a default, the output matrix will have the same type of basis elements as the input matrix. You can force the representation of the each of the indices of the output matrix to be covariant or contravariant, independent of the form of the input matrix. In order to do this, change **Row Component Change** or **Column Component Change** from the default value **None**. Depending on how the indices were set in the **Input** section, the other options can be **Covariant-**

>Contravariant and **Contravariant->Covariant**. The two indices on the matrix components will be raised or lowered accordingly.

When choosing anything other than **None**, the choices of which metric to use for the row transformation, as well as which metric to use for the column transformation, become available. Here, choose these metrics as either **Spatial** or **Material**.

Tensors in COMSOL Multiphysics

The equations underlying physics interfaces have typically been formulated in terms of tensors, before being converted into the component form that is required by the expression evaluator and matrix assembly code in the core of COMSOL Multiphysics. This conversion is to a large extent automatic: inside the physics interfaces, the equations are represented using vector and matrix objects with well-defined tensor (transformation) properties. When equations are exported for assembly, or for display in **Equation View** nodes, these objects are flattened into collections of variables representing their components in some coordinate system. In order to interpret the values of these variables in postprocessing, or to use them correctly in other equations, it is important to know what kind of components they are, which coordinate system they refer to, and sometimes how they transform between systems.

For some component variables, the coordinate system they refer to is written out in the variable's description, which is visible in postprocessing, in **Equation View** and in **Replace Expression** menu trees. But in many cases, component properties are implied by the type of variable the components belong to and by the indices uses to generate unique variable names for its components. This section intends to provide some guidance for interpreting the meaning of tensor component variables based on their name and origin.

For a more general discussion about the properties of tensor fields, see http://www.comsol.com/multiphysics/tensor-analysis

INDEX NOTATION

Tensor component variable names are generally generated from a base name (the *tensor name*) by adding one or two indices. This is done using one of two available principles: either indices are coordinate names from the coordinate system to which the index refers, or they are numbers `1`, `2` and `3`.

The most common situation is that a vector or matrix variable is exported as components in one of the four standard frames, and then normally uses that frame's coordinate names as indices. All frame coordinate names which are currently used in a Component can be inspected (and changed) in the **Component** node's **Settings** window. The default names for the spatial and material frames in a 3D model are `x`, `y`, `z` and `X`, `Y`, `Z`, respectively. For example, a vector **a** in the material frame has components denoted by `aX`, `aY`, and `aZ`, while one in the spatial frame would have components `ax`, `ay`, and `az`.

Tensors which are represented as component variables referring to a user-defined coordinate system often but not always use the coordinate names specified in the coordinate system nodes **Settings** window as indices. For example the normal direction component of a vector **a** in the default **Boundary System** would typically be called `an`.

Remaining tensors have their components denoted by numerical indices. For example, a vector **a** can have components `a1`, `a2`, and `a3`. Such indices are always used when components refer to some implicit coordinate system (which does not exist as a node in the Model Builder tree), but also in other situations where it has been found more convenient to avoid dynamically changing component names when frame or coordinate system coordinate names are changed. This is for example the case for components of base vectors and transformation matrices defined by coordinate system nodes, and for tensors used internally in structural mechanics interfaces.

It is not possible to tell whether or not the indices are covariant or contravariant just from the component variable names, since they are not subscripted or superscripted. It is up to the user to keep track of these properties when necessary. It is also not possible to tell whether proper interpretation of the component requires a volume reference, and if so, which volume reference that would be. For example, you cannot just by looking at component names tell the difference between a *nominal stress* vector (referring to the material frame surface area) and a true stress vector (referring to the spatial frame surface area). One possible way of checking the variance and density properties of a tensor's component variables is to insert it into one of the transform features (Vector Transform or Matrix Transform), and observe how the input coordinate system settings are updated.

The bottom line is that when a component variable uses a frame or coordinate system coordinate as index, you can rest assured that the component value refers to the corresponding system. When the index is a number, you have to check the variable's description and the context in which it is used to find out which system it refers to. And the same thing applies when covariance/contravariance or density properties are important

COVARIANT AND CONTRAVARIANT COMPONENTS

Tensor objects used inside a physics interface are tied to a coordinate system, that can be a standard frame, one defined by the user under **Variable Utilities>Coordinate Systems**, or created implicitly inside the interface. Each component (each index) of a tensor is also set to be either covariant or contravariant. In some cases it is important to keep track of this.

For example, contravariant components of a vector are transformed from a user-defined coordinate system to the underlying frame system by contracting over the first index of the transformation matrix defined by the coordinate system feature (multiplying the vector with the transformation matrix from the left). Covariant components are transformed in the same direction by contracting over the second index of the inverse of the transformation matrix (multiplying the vector from the left with the transpose of the inverse). If the coordinate system is orthonormal in the underlying frame, the transpose of the transformation matrix is equal to its inverse, and the transpose of the inverse is the transformation matrix itself. So in that case covariant and contravariant components transform in the same way. But if the coordinate system is nonorthonormal, covariant components transform using a different matrix.

By convention, all user inputs that may have matrix or vector form are set to be fully contravariant. This is not explicitly stated. For example, in the Heat Transfer in Solids interface, two possible inputs are the velocity vector $\mathbf{v}$ and the thermal conductivity matrix $\boldsymbol{k}$. What is entered as the components for those tensors is treated as being contravariant components. This does not matter as long as only orthonormal coordinate systems are used, but it will make a difference otherwise. Just like the unit needs to be specified when entering numerical values, the basis in which the components represent the tensor needs to be known in order for the values to have a meaning.

Consider now the physical variables that the equations are solved for, and whether they "should" be covariant or contravariant. A tensor is not inherently covariant or contravariant - the different kinds of components are just two ways of expressing the same thing. For the sake of consistency, the convention is that most variables are stored as their contravariant components. However, in order to avoid unnecessary transformations of the components between bases, it is sometimes advantageous to store the covariant components instead.

A few examples of this can be taken from different physics interfaces. In the Structural Mechanics Module, two second order tensors are the stress tensor σ and the strain tensor ε. The colon product between these tensors appears in expressions for energy, and in particular in the weak formulation used to build the stiffness matrices in the finite element formulation. It is therefore more convenient if one is covariant and one is contravariant, since then

$$\sigma:\varepsilon = \sum_{i,j}\sigma^{ij}\varepsilon_{ij} = \sum_{i,j}\sigma_{ij}\varepsilon^{ij}.$$

without the need to involve or even specify a metric.

In COMSOL, the stress tensor is stored with contravariant components while the strain tensor is stored with covariant components. Another example can be taken from the AC/DC Module, having variables as the electric field vector **E**, the magnetic flux density **B**, and the magnetic vector potential **A**. Two of Maxwell's equations containing these can be written as

$$\mathbf{E} = -\nabla V - \frac{\partial \mathbf{A}}{\partial t},$$

and

$$\nabla \times \mathbf{E} = -\frac{\partial \mathbf{B}}{\partial t}.$$

Since the gradient of a scalar originally has covariant components, it is practical if the other vectors appearing in the first equation are covariant as well, for consistency. Because the curl operator changes the variance of its arguement, this would require the magnetic flux density to be contravariant, in order to have consistency in the second equation. This is exactly how these variables are stored—the electric field and the magnetic vector potential with covariant components and the magnetic flux density with contravariant components.

In general, you can expect gradients to be represented by covariant components, and fluxes to be represented by contravariant components. The constitutive tensors will then be contravariant in all indices.

TENSOR DENSITIES

There is one more important property that variable components can have, namely whether they are tensor densities or not. A tensor density is, generally speaking, something that is measured *per volume* or *per area*. Such variables need an extra multiplication by a volume factor when transformed between coordinate systems. There are also tensor capacities which transform *as* a volume or under a change of coordinate system. Note that in addition to vectors and matrices, also scalars can be densities or capacities. The common mass density is an example of the former, while the `dvol` variable representing mesh element volume is a scalar capacity.

It is important to note which physical variables should have which tensor density weights. This is more strict than whether or not the components are covariant or contravariant, since it is a physical fact rather than a matter of interpretation. Some variables must be tensor densities because of their physical origin. This applies in particular for all fluxes of a conserved quantity, for example the electric current density **J**. Many material properties must be densities because of the way they appear in constitutive relations: multiplying a gradient (which is a plain vector) to produce a flux (which is a vector density).

AUTO-TRANSFORMS

There are two kinds of transformations of tensor objects that need to be performed on a regular basis during manipulation of variables and equations. Inside the physics interfaces they are automatically carried out when necessary.

- Indices need to be lowered and raised, changing components from covariant to contravariant and vice versa.
- Components need to be transformed between different coordinate systems.

Raising and lowering indices is done by contraction with the metric tensor, which in COMSOL is denoted by `gSub` or `gSup`, depending on whether it is covariant (subscripted indices) or contravariant (superscripted indices). It is used when tensors are entered into expressions on the 'wrong' form. For example, if a dot product is taken between two vectors **a** and **b**, they need to be on the opposite form since

$$\mathbf{a} \cdot \mathbf{b} = \sum_i a^i b_i = \sum_i a_i b^i.$$

If both vectors are entered as covariant, or both contravariant, the metric is used to raise or lower the index of one of them. The same applies for other operations, like the colon product or the cross product, where it is important which components are used.

Transformations between the different coordinate systems are also needed when generating equations and variables, both between the different standard frames and between user defined coordinate systems. For example, if the two input tensors for some kind of operation have their components defined in different frames, one needs to be transformed to the other's frame. When making such coordinate transformations it becomes important whether components are covariant or contravariant. Otherwise, the components will transform with the inverse transpose of the correct transformation matrices, having components on the form $\frac{\partial x'^i}{\partial x^j}$ instead of $\frac{\partial x^i}{\partial x'^j}$, or vice versa. For orthonormal systems it does not technically make a difference, but for consistency and to ensure that it works in all systems equations are expected to be formally correct. It also becomes important that they are correctly labeled as tensor densities with the right weight, since that also affects the transformation.

Nonlocal Couplings and Coupling Operators

About Nonlocal Couplings

Nonlocal couplings establish couplings between different parts of a model component or between different model components. A nonlocal coupling is defined by a *coupling operator*, taking an expression as its argument when you use it (for example, to compute an average concentration). When the operator is used at a point in the destination geometry, for example, the value is computed by evaluating the argument in the source geometry. You can use a coupling operator to compute several quantities that use the same type of coupling between a source and a destination by calling it with different arguments. All types of nonlocal couplings have a source and a destination.

	Scalar coupling operators, such as the Integration coupling operator, have a global destination that does not need to be defined; the values are available globally.

The *source* is a subset of a single model component (such as some domains or boundaries) where the coupling operator evaluates the supplied expression (as an integration over the source, for example), while the *destination* is the part of the geometry where the result of the coupling operator is defined. The destination can, depending on the type of coupling, be a subset of one or several model components or a "global destination" (for a scalar value that is available everywhere). The coupling operator's value is computed by evaluating the expression given as an argument at one or several points in the source. The source and destination are both geometrical objects, but the source is limited to a single geometry, or a part of a single geometry, whereas the destination is often global.

To add a Nonlocal Coupling to any Component:

- In the **Definitions** toolbar, select a nonlocal coupling node from the **Nonlocal Couplings** ( ) menu, or
- Right-click the **Definitions** ( ) node and choose an option from the **Nonlocal Couplings** submenu.

ABOUT COUPLING OPERATORS

Coupling operators are useful for modeling problems with multiple components that are connected, for example. They represent generalizations of expressions that can simplify a problem and thereby reduce the computational cost and time. You define a coupling operator by first selecting the source, where the argument of the operator is evaluated, and, in some cases, a destination. An expression to evaluate is not required when you define a coupling operator; instead you can use coupling operators in different modeling contexts, passing the expression to evaluate as an input argument to the coupling operator.

There are three categories of coupling operators:

- *Extrusion*. These operators — General Extrusion, Linear Extrusion, Boundary Similarity, and Identity Mapping — connect a source and a destination and take an expression as an argument. When the argument is evaluated at a point in the destination, its value is computed by evaluating the argument at a corresponding point in the source. When the source and destination are of the same space dimension, it is typically a pointwise mapping. When the destination has a higher dimension than the source, the mapping is done by extruding pointwise values to the higher dimensions. For some examples of the use of extrusion coupling operators, see Examples of Extrusion Couplings.
- *Projection*. These operators — General Projection and Linear Projection — evaluate a series of line or curve integrals on the source, where the line or curve positions depend on the positions of the evaluation points in the destination. In this way it is possible to compute the integral of an expression over one space variable for a range of different points along the other space axis, giving a result that varies over the latter space variable. For example,

you can obtain the average along the y direction of a variable u defined on some 2D domain in the xy-plane by computing the integral

$$\bar{u}(x) = \int u(x, y)\, dy$$

You can compare the projection couplings to creating a 2D projection as a shadow on a wall using lighting on a 3D object. COMSOL Multiphysics uses a method whereby it first applies a one-to-one map to the mesh of the source. It then carries out the integrals in the source over curves that correspond to vertical lines in the transformed source mesh. You can define the map between source and destination in two ways: as a *linear projection* or as a *general projection*. For some examples of the use of projection coupling operators, see Examples of Projection Couplings.

	The projection coupling does not project the **srcdim**-dimensional source onto the destination; it projects the source onto the **srcdim−1** lowest dimensions of the intermediate mesh, from which results are fetched using the destination transformation. Any domain where the destination transformation can be evaluated is a valid destination; the destination's topology is not related to the projection process in any way, except for the constraint that the destination transformation it must map the destination points into the region of **srcdim−1**-dimensional space where there is any data to fetch.

- *Scalar*. These operators — Integration, Average, Maximum and Minimum — define a scalar value such as an integration, the average over a set of geometric entities, or the maximum or minimum value of an expression and have a "global destination" (that is, they are available everywhere in the model) that you do not need to specify:
  - An *Integration coupling operator* is the value of an integral of an expression over the source, which is a set of geometric entities (domains, for example).
  - An *Average coupling operator* computes the average of an expression over the source.
  - A *Maximum* or *Minimum coupling operator* computes the maximum or minimum, respectively, of an expression over the source.

  These operators can be evaluated anywhere in a model, and the value does not depend on where in the model the evaluation occurs. Integration couplings are useful for evaluating integrated quantities. To evaluate the total current across a boundary in a 2D Electric Currents model, for example, define an integration coupling operator `intop1` with a source on the boundary where the current flows. Then the value of `intop1(ec.normJ*ec.d)`, where `normJ` is the current density norm (SI unit: A/m^2) and `d` is the thickness of the 2D geometry (SI unit: m), is the total current flowing across that boundary (SI unit: A). For some other examples of the use of integration coupling operators, see Examples of Integration Couplings

Coupling operators can:

- Make the value and the exact Jacobian of an expression available nonlocally.
- Take information from a domain, for example, and make it available on other parts of a model (a boundary, for example).
- Be used for results evaluation and visualization purposes.
- Define nonlocal couplings including mesh transformations, integrals over domains and boundaries, and projections.

ABOUT SOURCE AND DESTINATION MAPPINGS

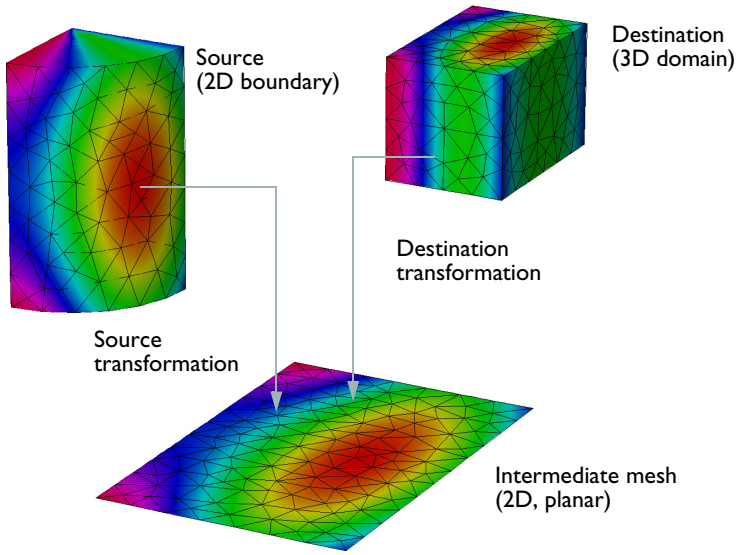

Figure 5-2: An example of a general extrusion mapping.

The definition of any extrusion coupling involves two mesh maps. The *source map* is a one-to-one mapping that maps the mesh of the physical source of dimension srcdim to an *intermediate mesh* of the same dimension embedded in a space of dimension idim ≥ srcdim. The *destination map* is a mapping from the destination of dimension dstdim, where the operator can be evaluated, to the same space that contains the intermediate mesh.

When the value of the coupling operator is requested somewhere in the destination, the software transforms the destination points using the destination map. It compares the resulting coordinates to the elements in the intermediate mesh to find corresponding locations in the physical source. This means that the source map must be inverted but not the destination map. The latter can in fact be noninvertible, which is, for example, the case when dstdim > idim, leading to an extrusion. If the mapping fails, select the **Use NaN when mapping fails** check box in the **Advanced** section of the **Settings** window for the **General Extrusion** and **Linear Extrusion** operators to evaluate the operator to NaN (Not-a-Number). Otherwise, an error occurs.

To avoid the need to solve a nonlinear system of equations for every destination point, the COMSOL Multiphysics software assumes that the source map is linear on each element of the intermediate mesh. In practice, the map is often trivial and leaves the coordinates unchanged, but it can also rescale, stretch, bend, or reflect the mesh.

EXAMPLES OF EXTRUSION COUPLINGS

All the graphics in these examples use **General Extrusion** nonlocal coupling.

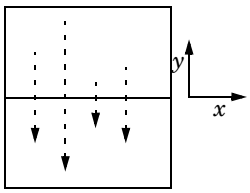

One application of a **General Extrusion** coupling is to mirror the solution on the x-axis. This can be useful for analysis; for example, to probe the solution at a point that is moving in time but is associated with a stationary geometry. Both source and destination are two-dimensional, as well as the intermediate mesh (srcdim = idim = dstdim). The source map is `x`, `y` (which is the default source map) and the destination map to enter is `x`, `-y`. This can also be done with a **Linear Extrusion** coupling operator.

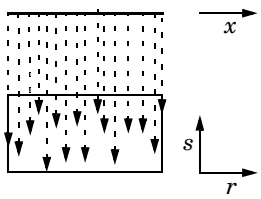

Another **General Extrusion** example is to extrude the solution in the 1D geometry to a 2D domain along the s-axis. The source map is `x`, and the destination map is `r`, so here $\mathrm{srcdim} = \mathrm{idim} = 1$, $\mathrm{dstdim} = 2$. If the 2D geometry is Component 1 (`comp1`) and the 1D geometry is Component 2 (`comp2`), you can plot the extruded 1D solution in a 2D surface plot using `comp2.genext1(u)`, for example, if the solution variable for the 1D solution is `u`.

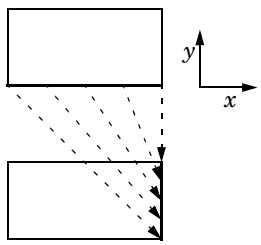

Another example maps values on the lower boundary of a rectangle that extends from $x = -1$ to $x = 1$ and from $y = 0$ to $y = 1$, to the right boundary on the same rectangle. The source map can be the default `x`, `y` and the destination map then `2*y-1`, `0`; alternatively, you can set the source map to `x` and leave the y-expression empty, and the destination map as `2*y-1` and also leave the y-expression empty. Both maps have a single component because $\mathrm{srcdim} = \mathrm{idim} = \mathrm{dstdim}$. The difference between the first and second option is in which dimension the interpolation is performed (that is, the value of idim). The first option has the advantage that it can handle also source selections with a topology that cannot be represented in the dimension of the destination — for example, a map from a unit circle onto a line with source map `x`, `y` and destination map `cos(x)`, `sin(x)`. The second option has the advantage that 1D interpolation is faster and does not risk interpolation failure for coarse and non-matching meshes. This map is also linear and can be done with **General Extrusion** or **Linear Extrusion**, or with **Boundary Similarity**.

Finally, consider the case of a single rectangular domain where the source term in Poisson's equation comes from the inward flux over the right boundary for the corresponding y coordinate.

$$\begin{aligned} -\Delta u &= \frac{\partial}{\partial n} u(x_2, y) && \text{on } \Omega \\ u &= xy && \text{on } \partial\Omega \end{aligned}$$

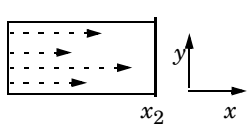

The figure to the left illustrates the extrusion process. The values of the influx on the boundary become available throughout the domain by extrusion along the y-axis. The source map is `y`, and the destination map is `y`.

EXAMPLES OF PROJECTION COUPLINGS

All these examples use the **General Projection** nonlocal coupling, but they can also be done using **Linear Projection** nonlocal couplings.

Projection Coupling — Example 1

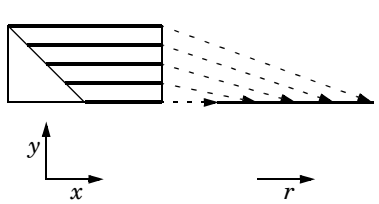

For each point r, the coupling operator returns the integral

$$v(r) = \int_{\substack{y = r/2 \\ (x,y) \in S_2}} u(x, y)\,dx$$

The source map is `y`, `x`, and the destination map is `r/2`.

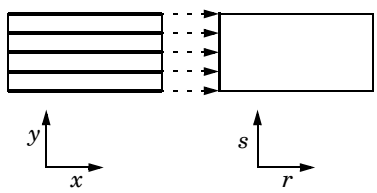

For each point $(0, s)$, the coupling operator returns the integral

$$v(0,s) = \int_{\substack{y=s \\ (x,y)\in S_2}} u(x,y)dx$$

The source map is `y`, `x`, and the destination map is `s`.

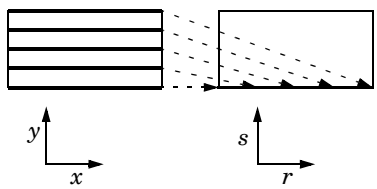

For each point $(r, 0)$, the coupling operator returns the integral

$$v(r,0) = \int_{\substack{y=r/2 \\ (x,y)\in S_2}} u(x,y)dx$$

The source map is `y`, `x`, and the destination map is `r/2`.

For example, if the 2D geometry is Component 1 (`comp1`) and the axisymmetric 2D geometry is Component 2 (`comp2`), you can plot the projected 2D solution in a 2D axisymmetric line plot using `comp1.genproj(u)`, for example, if the solution variable for the planar 2D solution is `u`.

The integration can also sweep nonrectangular domains. The integrals include only the source domains; they exclude other domains and the external area.

Projection Coupling — Example 2

Consider the case of a single rectangular domain with Poisson's equation. Integrate the solution squared along lines parallel to the x-axis and make the result available for analysis on the left boundary.

$$\begin{aligned} -\Delta u &= 1 \quad \text{on } \Omega \\ u &= 0 \quad \text{on } \partial\Omega \end{aligned}$$

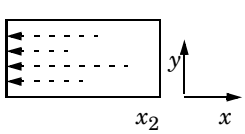

The figure illustrates the projection process. Project the integral of the solution squared on the boundary. The source map is `y, x` and the destination map is `y`. If the projection operator is called `genproj1`, the desired result is obtained by evaluating `genproj1(u^2)`.

Projection Coupling — Example 3

Consider a cylinder with a radius R in the xy-plane and a height L in the z direction. For the solution u in this geometry, the following two examples describe two type of projections:

- On one quarter of the side of this cylinder, you want to integrate the solution along curved lines of the cylinder and project it onto a straight line $z = [0, L]$. The source map is then `z`, `atan2(y,x)`, and you leave the z-expression empty. That creates a rectangular source where the x-axis is the z-coordinate and the y-axis is the angle along the side of the cylinder, which is the direction in which you want to integrate the solution for every position along the z-axis. The destination map here is simply `z` (leave the y-expression empty). The integral of the solution u along the side of the cylinder is available as, for example, `genproj1(u)`. To normalize it taking the length of the curved lines into account, use `genproj1(u)/(R*pi/2)` or `genproj1(u)/genproj1(1)`, where the latter expression also gives the length of the curved lines.
- It is also possible to do a projection with the cylindrical domain as the source and a boundary as target: For example, projecting the integral of u along the z direction onto the bottom surface of the cylinder. To do so, create a General Projection coupling operator (`genproj2`, for example) with the default source map — `x, y, z` — and the default destination map: `x, y`. You can then plot and evaluate the projection of the integrated solution

as a 2D plot on the bottom surface using `genproj2(u)`. To get the average value, divide the projected value by the height of the cylinder using `genproj2(u)/L` or `genproj2(u)/genproj2(1)`.

Projection Coupling — Example 4

Consider a projection of a 3D geometry, where the projection path starts at the z-axis and extends in the radial direction. To achieve such a projection, create a General Projection coupling operator (`genproj3`, for example) with the source map using cylindrical coordinates (assuming the default spatial coordinate names):

- As the **x-expression**: `z` (or `sys2.a`, for example, from a Cylindrical System coordinate system `sys2`).
- As the **y-expression**: `atan2(y,x)` (or `sys2.phi`, for example, from a Cylindrical System coordinate system `sys2`).
- As the **z-expression**: `sqrt(x^2+y^2)` (or `sys2.r`, for example, from a Cylindrical System coordinate system `sys2`).

and the destination map using the same settings for its **x-expression** and **y-expression**. You can then plot and evaluate the projection as a 3D surface plot using `genproj3(1)`.

EXAMPLES OF INTEGRATION COUPLINGS

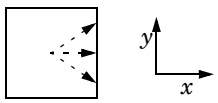

Consider Poisson's equation on a rectangular domain. The integral of the solution squared serves as the influx in a Neumann boundary condition on the right boundary. There is a Dirichlet boundary condition on the left boundary, and the top and bottom boundaries have zero influx.

$$
\begin{aligned}
-\Delta u &= 1 && \text{on } \Omega \\
u &= x && \text{on } \partial\Omega_1 \\
\frac{\partial u}{\partial n} &= 0 && \text{on } \partial\Omega_{2,3} \\
\frac{\partial u}{\partial n} &= -\int_{\Omega} u^2 d\Omega && \text{on } \partial\Omega_4
\end{aligned}
$$

For example, define an integration coupling operator called `intop1`, with the rectangular domain as source. You then define the influx for the Neumann boundary condition as `intop1(u^2)`.

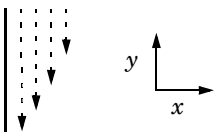

A second example is when a scalar value from a vertex is used everywhere on a boundary to which the vertex belongs. In structural mechanics you can use this type of coupling to formulate displacement constraints along a boundary in terms of the displacements of the endpoint. In electromagnetics the same technique can implement *floating contacts.*

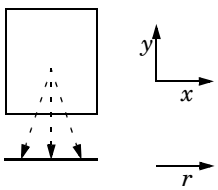

Another example is to use the integral over a domain in a 2D geometry along a domain in another 1D geometry. This approach is helpful for process-industry models where two processes interact.

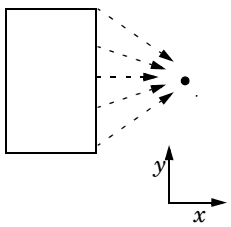

Integration coupling operators can implement *integral constraints.* First define a coupling operator at some vertex in such a way that it represents the value of the integral to be constrained. Then use a point constraint to set the coupling operator, and thereby the integral, to the desired value.

NONLOCAL COUPLINGS AND THE SPARSITY OF THE JACOBIAN

The Jacobian for problems formulated using the finite element method is usually large but sparse. This is because the solution at each mesh node can depend at most on the degrees of freedom at the neighboring mesh elements. However, by introducing nonlocal couplings using coupling operators, nonlocal dependencies are created that fill up the rows and columns of the affected source and destination nodes. These additional elements might make the Jacobian matrix only slightly less sparse, with marginal effects on solution speed; they can also make it a great deal less sparse, in which case memory use and CPU time involved in solving the problem increases considerably. For this reason, take particular care when introducing nonlocal couplings. For example, defining a heat source based on an integration operator over the whole domain that is also a function of temperature (the dependent variable) leads to a coupling between all the degrees of freedom in the model creating a full Jacobian matrix instead of the sparse limited-bandwidth matrices typical of finite element models.

	You can prevent the fill-in of the Jacobian matrix using the `nojac` operator, which forces COMSOL Multiphysics to exclude the expression that it encloses when forming the Jacobian. Using the `nojac` operator can slow down the convergence of the solution. Another possible solution is to add a single degree of freedom that represents the value of an expression with a scalar coupling operator.

General Extrusion

A **General Extrusion** coupling operator ( ) maps an expression defined on a source to an expression that can be evaluated on any destination geometry where the destination map expressions are valid. Compared to the *linear extrusion*, these operators define a more general, possibly nonlinear, relation between source and destination. Specifically, when the destination has more space dimensions than the source, the operator performs extrusion of values. The default **Operator name** is `genext1`.

	Go to Common Settings for Nonlocal Couplings for information about the **Operator Name**, **Source Selection**, **Source**, and **Advanced** sections.

DESTINATION MAP

Specify the general extrusion destination map by entering an expression in the **x-expression**, **y-expression**, and **z-expression** fields. This maps each point in the destination to a point in the intermediate mesh, where the argument of the extrusion operator is evaluated. A general extrusion operator can be evaluated at any point where the destination map expressions are defined.

	The number of destination map expressions is the same as the space dimension of the intermediate mesh. For example, if the intermediate mesh is in 2D space, there is no **z-expression** field. Also, depending on the dimension of the coupling, you can leave the **y-expression** field in the source and destination maps empty for a 1D map in a 2D model component, for example.

	If you have the: • Acoustics Module, see *Flow Duct*: Application Library path **Acoustics_Module/Aeroacoustics_and_Noise/flow_duct**. • Chemical Reaction Engineering Module, see *Packed Bed Reactor*: Application Library path **Chemical_Reaction_Engineering_Module/Reactors_with_Porous_Catalysts/packed_bed_reactor**. • Geomechanics Module, see *Concrete Beam With Reinforcement Bars*: Application Library path **Geomechanics_Module/Tutorials/concrete_beam**. • Subsurface Flow Module, see *Aquifer Characterization*: Application Library path **Subsurface_Flow_Module/Fluid_Flow/aquifer_characterization**.

Linear Extrusion

A **Linear Extrusion** coupling operator ( ) maps an expression defined on a source to an expression that can be evaluated in the destination. Use this to define a linear mapping of this kind. Linear extrusion can be used when the correspondence between evaluation points in the source and destination is linear and in some nonlinear cases. Otherwise, use a general extrusion coupling. The Linear Extrusion operator defines a linear extrusion that maps between geometric parts of the same dimension. The parts can exist in geometries of different space dimensions. For example, you can couple edges (boundaries) in 2D to edges in 3D; or couple 2D domains to 3D faces. In these cases geometries of different space dimensions are needed for the source and destination. You define the linear extrusion by specifying points in both source and destination. The default **Operator name** is `linext1`.

	Go to Common Settings for Nonlocal Couplings for information about the **Operator Name**, **Source Selection**, **Source**, **Source Vertices**, **Destination Vertices**, and **Advanced**, sections.

DESTINATION

The mapping from destination to source is defined as the following:

- First, the destination is orthogonally projected onto the linear space spanned by the destination vertices.
- Then this linear space is mapped linearly to the source, so that each destination vertex is mapped to the corresponding source vertex.

Select an option from the **Destination geometry** list if there is more than one geometry in the model. A linear extrusion operator can only be evaluated on the destination geometry and the destination vertices must be chosen in the destination geometry. Select an option from the **Destination frame** to evaluate the destination vertex coordinates in the specified frame.

	• With the Electrochemistry Module, see *Desalination in an Electrodialysis Cell*: Application Library path **Electrochemistry_Module/Electrochemical_Engineering/electrodialysis**.

Boundary Similarity

The **Boundary Similarity** coupling operator ( ) maps an expression defined on a part of a boundary to another part of a boundary with the same shape. This operator is slightly different for 2D and 3D models:

- In 3D, the destination map is a similarity that maps a destination boundary onto a set of source boundaries. The mesh is always viewed in the geometry frame. By default, the algorithm automatically chooses a map when

symmetries make several maps possible. To control this choice in 3D, add a One-Point Map ( ), Two-Point Map ( ), or Edge Map subnode ( ).

- *Edge Map*: Specify that a certain destination edge should be mapped onto a certain source edge. The edge's relative direction is given by the property direction. The edges must be adjacent to the given boundary.
- *One-Point Map*: Specify that a certain destination vertex should be mapped onto a certain source vertex.
- *Two-Point Map*: Specify that two destination vertices should be mapped onto two source vertices.

- In 2D, it works the same except the destination map is a similarity that maps a destination edge onto a set of source edges and there are no subnodes to add.

The default **Operator name** is `bndsim1`.

	Go to Common Settings for Nonlocal Couplings for information about the **Operator Name**, **Source Boundaries** and **Destination Boundary** sections, as well as the rest of the **Advanced**, section.

ADVANCED

	For 2D models, select a relative **Direction** of the source and destination edges: **Automatic orientation** (the default), **Same orientation**, or **Opposite orientation**. This specifies the relative direction of the source and boundary edges and specifies which one of the two possible similarity mappings between the source and destination edge to use.

	For 3D models, a similar direction functionality is provided by the subnodes One-Point Map, Two-Point Map, and Edge Map to exactly specify the similarity mapping between the source and destination when more than one possibility exists.

Select the **Use source map** check box to have a nonlinear correspondence between the source and destination. The source map is specified by entering expressions in the **x-expression**, **y-expression**, and **z-expression** fields.

	Only one map node is allowed per boundary similarity coupling and only one source or destination point per field is allowed.

One-Point Map

Use a **One-Point Map** to control a Boundary Similarity nonlocal coupling mapping in 3D. Right-click the **Boundary Similarity** node to add a **One-Point Map** subnode ( ).

POINTS

To select a single **Point on source** and a single **Point on destination** adjacent to the source and destination selection, click the **Active** button to toggle between turning ON and OFF selections.

Two-Point Map

Use a **Two-Point Map** to control a Boundary Similarity nonlocal coupling mapping in 3D. Right-click the **Boundary Similarity** node to add a **Two-Point Map** subnode ( ).

SOURCE POINTS

To select a single **First point on source** and a single **Second point on source**, click the **Active** button to toggle between turning ON and OFF selections.

DESTINATION POINTS

To select a single **First point on destination** and a single **Second point on destination** adjacent to the destination selection, click the **Active** button to toggle between turning ON and OFF selections.

Edge Map

Use an **Edge Map** to control a Boundary Similarity nonlocal coupling mapping in 3D. Right-click the **Boundary Similarity** node to add a **Edge Map** subnode ( ).

EDGES

To select a single **Source edge** and a single **Destination edge**, click the **Active** button to toggle between turning ON and OFF selections. The destination edge is mapped to the source edge by the similarity mapping from destination to source.

ADVANCED

Select a relative **Direction** of the source and destination edges — **Automatic orientation** (the default), **Same orientation**, or **Opposite orientation**. This specifies the relative direction of the source and boundary edges and specifies which one of the two possible similarity mappings between the source and destination edge to use.

Identity Mapping

An **Identity Mapping** nonlocal coupling ( ) maps between geometric entities that overlap, possibly when viewed in different frames. When it is evaluated at a specific set of coordinates in the destination frame, its argument is evaluated with the same coordinates in the source frame. The default **Operator name** is `idmap1`.

FRAMES

Select a **Source frame** to use on the source geometric entity and a **Destination frame** to use on the destination geometric entity. In most cases the default **Spatial** frame can be used since that will create a mapping between the points which coincide at each instant when the geometry is deforming. In other cases, the **Material**, **Geometry**, or **Mesh** frame can be more appropriate, but typically the same frame is used for both source and destination.

	Go to Common Settings for Nonlocal Couplings for information about the **Operator Name**, **Source Selection**, and **Advanced** sections.

	With the Acoustics Module, see *Ultrasonic Flowmeter with Piezoelectric Transducers: Coupling Between FEM and DG*: Application Library path **Acoustics_Module/Ultrasound/flow_meter_piezoelectric_transducers**.

General Projection

Use a **General Projection** nonlocal coupling ( ) to define integration along curves. A projection coupling operator evaluates an expression defined on a source by integration along lines or curves depending on the evaluation point in the destination. The General Projection operator is defined by mapping the source to an abstract intermediate space of dimension `srcedim`, and the destination to the subspace of dimension `srcedim−1` obtained by setting the last coordinate to 0 (`srcedim` is the dimension of the source selection). To every point in the destination, there is

a vertical line in the intermediate space, obtained by allowing the last coordinate to vary while the remaining coordinates are given by the destination map. The set of points in the source selection that are mapped onto this line by the source map is a line or curve, and the projection operator is evaluated by integrating along this line or curve. The default **Operator name** is `genproj1`.

	See Common Settings for Nonlocal Couplings for information about the **Source Selection** section.

SOURCE MAP

Specify the general projection source map using expressions in the **x-expression**, **y-expression**, and **z-expression** fields.

	The dimension of the intermediate space equals the dimension `srcedim` of the source. If the selection has lower dimension than the source geometry, specify only the first `srcedim` expressions.

Use expressions containing spatial coordinates in the source geometry when defining the map. The map must be approximately linear within each mesh element. Select a **Source frame** from the list.

DESTINATION MAP

Enter an **x-expression** and, depending on the dimensions, **y-expression** for each coordinate except the last in the intermediate space.

The destination map has one field less than the source map. When defining the map you can use expressions containing spatial coordinates in the destination geometry. The destination mapping can be highly nonlinear or noninvertible.

- If the selection has lower dimension than the source geometry, specify only the first `srcedim`−1 expressions. A general projection operator can be evaluated at any point where its destination map is defined.
- If the source selection has dimension 1, no destination map needs to be specified, and consequently this section is not shown if the source geometry is 1D. In this case, it is probably better to use an integration coupling.

ADVANCED

Enter an **Integration order** of the numerical integration method (default: 4). See integration order in the *Glossary*.

Linear Projection

Use a **Linear Projection** nonlocal coupling ( ) when the argument is to be integrated along a line, and the line depends linearly on the evaluation point.

The linear projection maps between a source and a destination of the nearest lower dimension. The source and destination can exist in geometries of different space dimensions. For example, you can couple domains in 2D to edges in 3D or couple 3D domains to 2D domains. You define the linear projection by specifying points in both the source and destination. The default **Operator name** is `linproj1`.

	Go to Common Settings for Nonlocal Couplings for information about the **Operator name**, **Source Selection**, **Source Vertices**, and **Destination Vertices** sections.

SOURCE

Select a **Source frame** from the list to evaluate the coordinates of the source vertices in the selected frame.

Then specify the linear projection by giving a set of points in the source and in the destination. The order of the vertices is significant. COMSOL Multiphysics constructs a linear projection from the source to the destination using the subspaces spanned by the vertices. Denote the map rank by n, denote the source vertices by $x_0, x_1, \ldots, x_n$, and denote the destination vertices $x'_0, x'_1, \ldots, x'_n$. After padding the source and destination vertices' vectors with zeros as necessary, the software solves the following matrix equation for a *transformation matrix* T and a *translation vector* V:

$$
\begin{gathered}
x'_0 = Tx_0 + V \\
x'_1 - x'_0 = T(x_1 - x_0) \\
\ldots \\
x'_n - x'_0 = T(x_n - x_0)
\end{gathered}
$$

For the projection nonlocal coupling there must be one more vertex in the source than in the destination.

DESTINATION

Select an option from the **Destination geometry** list if there is more than one geometry in the model.

- A linear projection operator can only be evaluated on the destination geometry and the destination vertices must be chosen in the destination geometry.
- The destination vertex coordinates are evaluated in the selected **Destination frame**.

ADVANCED

Enter an **Integration order** of the numerical integration method (default: 4). See integration order in the *Glossary*.

Integration

An **Integration** nonlocal coupling ($\int du$) integrates an expression over the source (some selected geometric entities like domains, boundaries, or edges). You can also use it with a point as the source to make the value of an expression at that point available globally. The integral is evaluated by integrating the expression (integrand) in the argument over the source (or, in some cases, by summing the expression over the node points in the source). Integration coupling operators have global destination, so they can be evaluated anywhere in the model. Because it is an operator, you can define one integration operator (`intop1`, for example) for a part of the geometry (a boundary, for example) and then use that several times in the model to compute integrals over that boundary for different integrands. For example, `intop1(T)` is the integral of the temperature T over the boundary, and `intop1(1)` is simply the length (2D) or area (3D) of the boundary. Also, using the `dest` operator it is possible to create convolution integrals. The default **Operator name** is `intop1`.

	Go to Common Settings for Nonlocal Couplings for information about the **Operator name**, **Source Selection**, and **Advanced** sections.

	• *Automotive Muffler*: Application Library path: **COMSOL_Multiphysics/Acoustics/automotive_muffler** • *An Integro-Partial Differential Equation*: Application Library path **COMSOL_Multiphysics/Equation_Based/integro_partial**

Average

An **Average** nonlocal coupling (AV) computes the average of an expression over the source (some selected geometric entities). It can be evaluated anywhere in the model. It is similar to the Integration operator; the difference being that the integral is divided by the volume, area, arc length, or number of points in the source, depending on the type of geometric entities in the source. The default **Operator name** is `aveop1`.

	Go to Common Settings for Nonlocal Couplings for information about the **Operator name**, **Source Selection**, and **Advanced** sections.

	Effective Diffusivity in Porous Materials: Application Library path **COMSOL_Multiphysics/Diffusion/effective_diffusivity**

Maximum and Minimum

The **Maximum** (MAX) and **Minimum** (MIN) coupling operators compute the maximum or minimum of an expression over selected geometric entities in the source and gives the maximum or minimum value of the expression in the argument over the source. The operator can be evaluated anywhere in the model. Two arguments can be given, and the returned value is then the value of the second argument evaluated in the max/min of the first argument. This is useful for evaluating, for example, the location of the maximum or minimum. In a 2D model where the temperature T is solved for, use the following syntax for the maximum operator `maxop1` in a **Global Evaluation** node, for example, to get the x- and y-coordinate for the maximum of the temperature: `maxop1(T,x)` and `maxop1(T,y)`. The Maximum and Minimum operators support the `dest` operator, which forces evaluation in the destination points instead of the source points (see dest). The default **Operator name** is `maxop1` or `minop1`.

	When a **Max/Min Volume**, **Max/Min Surface**, or **Max/Min Line** plot is used, the maximum and minimum values, along with the coordinates for the corresponding locations, appear in a table (underneath the plot with the default COMSOL Desktop layout).

ADVANCED

Select a **Point type** — **Node points** (the default), **Integration points**, or **Lagrange points**. The point type controls the choice of evaluation points — the result is more accurate with more points, but more points also means a slower evaluation.

- If **Integration points** is selected, enter an **Integration order**. The default is `4`. See integration order in the *Glossary*.
- Select **Lagrange points** to compute the maximum or minimum by evaluating the expression in the argument at a finite set of points in the source and taking the maximum or minimum of these values. If it is selected, enter a **Lagrange order**. The default is `2`.

	Go to Common Settings for Nonlocal Couplings for information about the **Operator name** and **Source Selection** sections.

	Deformation of a Feeder Clamp: Application Library path **COMSOL_Multiphysics/Structural_Mechanics/feeder_clamp**

Common Settings for Nonlocal Couplings

The following sections in the **Settings** windows for the nonlocal coupling nodes are similar or the same for some of the nonlocal coupling nodes and are described in this section.

OPERATOR NAME

Enter a name for the operator in the **Operator name** field or use the default name. This is the name that is used to access the operator in the model, so use a name that describes it well. For example, `genext1` is the default name for the first General Extrusion coupling operator, and you can use it to evaluate a temperature T in the destination using `genext1(T)`, for example.

SOURCE SELECTION

The source selection defines the source for the nonlocal coupling — the part of the geometry where the coupling operator evaluates the supplied expressions.

From the **Geometric entity level** list, select **Domain**, **Boundary**, **Edge** (3D only), or **Point**. Select **Manual** or **All domains**, **All boundaries**, **All edges**, or **All points** from the **Selection** list. If **Manual** is selected, select geometric entities in the **Graphics** window. Select **All domains**, for example, to add all applicable geometry to the **Selection** list.

SOURCE VERTICES AND DESTINATION VERTICES

	The selection of **Source Vertices** and **Destination Vertices** define the linear mapping from the destination to the source.

Click the **Active** button to activate one of the vertex selections. You can toggle between turning ON and OFF selections.

Select a single source vertex for each of **Source vertex 1**, **Source vertex 2**, **Source vertex 3**, and **Source vertex 4**. Then select a single destination vertex for each of **Destination vertex 1**, **Destination vertex 2**, **Destination vertex 3**, and **Destination vertex 4** (vertex 4 is available for Linear Extrusion only).

- For Linear Extrusion: The number of source vertices must be at least one and not more than 1+min(srcsdim,dstsdim), where srcsdim and dstsdim are the dimensions of the source and destination geometries, respectively. The number of destination vertices entered should be the same as the number of source vertices. If not all destination vertex selections are used, the empty selections must be last.
- For Linear Projection, select srcedim+1 source vertices where srcedim is the dimension of the source selection. Depending on the dimension of the source selection, it can be that some of the last source vertex selections should be left empty. The number of destination vertices should be *one less* than the number of source vertices. If not all destination vertex selections are used, the empty selections must be last. Select srcedim destination vertices where srcedim is the dimension of the source selection. Depending on the dimension of the source selection, it can be that some of the last destination vertex selections should be left empty.

An evaluation point in the destination geometry is first orthogonally projected onto the linear space spanned by the destination vertices (unless they span the entire space). The projected point is then mapped to the source geometry by a linear mapping taking each destination vertex to the corresponding source vertex. Let L be the line through this point, which is parallel to a line through the first and last source vertices. If the source selection lies in the linear space spanned by the source vertices, the Linear Projection operator is evaluated by integrating along L. In general the operator is evaluated by integrating along the line or curve in the source selection, which is mapped to L under orthogonal projection onto the linear space spanned by the source vertices.

SOURCE BOUNDARIES AND DESTINATION BOUNDARY

Select **Manual** or **All boundaries** from the **Selection** list to define the source selection. If **Manual** is selected, select boundaries in the **Graphics** window. Select **All boundaries** to add all boundaries to the **Selection** list.

There can only be one destination boundary. Click the **Active** button to enable or disable the **Destination Boundary** selection. Then choose the boundary in the **Graphics** window.

SOURCE FRAME AND SOURCE MAP

Select a **Source frame** to use in the source. In most cases the **Source** section default settings can be used. Optionally, select the **Use source map** check box and enter expressions in the **x-expression**, **y-expression**, and **z-expression** fields (in 3D) for the source map from the source to the intermediate mesh.

For the General Extrusion nonlocal coupling, the number of source map expressions is the same as the number of destination map expressions. With the default source map expressions, the intermediate mesh can be considered identical to the source.

The dimensionality idim of the intermediate space is determined by the number of nonempty source and destination map expressions, which must be the same, and must also satisfy srcedim ≤ idim ≤ srcsdim, where srcedim is the dimension of the source selection, and srcsdim is the dimension of the source geometry.

ADVANCED SETTINGS FOR NONLOCAL COUPLINGS

For the General Extrusion, Linear Extrusion, Boundary Similarity and Identity Mapping nonlocal couplings, select an option from the **Mesh search method** list to specify what should happen if an evaluation point in the destination is mapped to a point outside the source:

- If **Use tolerance** is selected (the default) the result depends on the other field definitions in this section.
- If **Closest point** is selected, the closest point in the source selection is used.

Enter a scalar positive value in the **Extrapolation tolerance** field. If the mapped point is within a distance of the extrapolation tolerance times the mesh element size, the point is considered to be in the source. Otherwise, the mapping fails.

Select the **Use NaN when mapping fails** check box to evaluate the operator to NaN (Not-a-Number) if the mapping fails. Otherwise an error occurs.

For the Integration and Average couplings, select **Integration** or **Summation over nodes** from the **Method** list. In most cases use integration. Summation over nodes is useful, for example, for calculating reaction forces.

	You can only use the **Summation over nodes** option for expressions that have uniquely defined values in the nodal points.

If **Integration** is selected, enter a value in the **Integration order** field (see integration order in the *Glossary*). Also, when working with multiple frames, select a **Frame** from the list for the volume element to be used in the integration.

For axisymmetric geometries, the **Compute integral in revolved geometry** check box is selected by default to perform the integration in 3D (for a 2D axisymmetric model) or in 2D (for a 1D axisymmetric model).

Coordinate Systems

About Coordinate Systems

COMSOL Multiphysics uses a global Cartesian coordinate system by default to specify material properties, loads, and constraints in all physics interfaces and on all geometric entity levels (points, edges, boundaries, and domains). In boundary conditions and fluid domains, the global system is generally interpreted as having fixed axis directions in space; that is, it is a *spatial frame* system. When specifying properties of solid materials, the global system axes are instead fixed in the material. In other words, it is a *material frame* system in that context.

Not only the global coordinate system, but also coordinate systems defined as a rotation relative to the global system, are context-dependent in this way. Such systems are collectively referred to as *relative coordinate systems*, to distinguish them from *absolute coordinate systems*.

The spatial Cartesian coordinate system coordinates default to the following names in 2D and 3D (in 2D axisymmetric geometries, COMSOL Multiphysics uses cylindrical coordinates):

GEOMETRY	DEFAULT NAME OF SPATIAL COORDINATES
2D	x y
3D	x y z
Axial symmetry 2D	r φ z

In 3D, an image displays in the lower-left corner of the **Graphics** window

to indicate the orientation of the global coordinate system.

User-defined coordinate systems can be used on all geometric entity levels to simplify the modeling process. In the physics interfaces, you can use these coordinate systems to define orthotropic and anisotropic material properties that are not aligned with the global Cartesian coordinate system. To choose a coordinate system, select it from the **Coordinate system** list in the **Coordinate System Selection** section. The list contains the **Global coordinate system** (the default) and any other coordinate systems that you have added, for example see Figure 5-3.

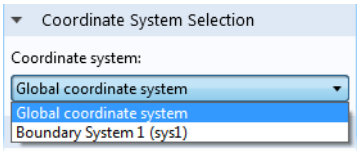

Figure 5-3: An example of options available in the Coordinate system list. The default is the Global coordinate system.

See Table 5-17 for an overview of the available coordinate systems. Note in particular that some coordinate systems specify absolute directions in space, while others specify a rotation relative to the default global system, as indicated by the Type column in the table.

To add a Coordinate System to any Component:

- In the **Definitions** toolbar, select coordinate system features from the **Coordinate Systems** menu, or
- Right-click the **Definitions** (≡) node and choose an option from the **Coordinate Systems** submenu.

TABLE 5-17: COORDINATE SYSTEM DESCRIPTIONS

NAME AND LINK	ICON	TYPE	DESCRIPTION
Base Vector System		Relative	1D, 2D, and 3D. Define this using a set of base vectors to form a coordinate system.
Boundary System		Absolute	2D and 3D. A local base vector system on 2D boundaries (t, n) and on 3D boundaries (t1, t2, n). Use it to apply loads that apply in a normal or tangential direction on a boundary that is not aligned with the global Cartesian coordinate system. This coordinate system is always available. You can add Reverse Normal and Domain Normal subnodes to reverser the normal for some boundaries and switch the normal direction on the exterior of some domains, respectively.
Combined System			1D, 2D, and 3D. Use a combined system when you need to use different coordinate systems in different domains to represent some material property, for example. You can add applicable coordinate systems as subnodes, each with a geometric entity selection.
Composite System		Same as base system	1D, 2D, and 3D. Create a composite coordinate system from a base system and a system defining axes relative to the base system.
Cylindrical System		Absolute	2D and 3D. Use a cylindrical system when rotational symmetry about the axis is required. Not available in geometries with 2D axial symmetry, where a cylindrical coordinate system is the default coordinate system.
Mapped System		Absolute	1D, 2D, and 3D. The mapped system can deal with translated and rotated coordinate systems. Use this to create a system that defines a mapping from the frame coordinate system.
Rotated System		Relative	2D and 3D. Use a rotated system to define rotation about the out-of-plane direction or Euler angles in 2D and Euler angles in 3D.
Scaling System		Absolute	For physics that support infinite elements or perfectly matched layers only. Use this coordinate system, which is similar to a mapped coordinate system, to arbitrarily deform the domain.
Spherical System		Absolute	3D only. Use a spherical system when a field or property using spherical coordinates is to be specified.
System from Geometry		Absolute	3D only. Use a coordinate system from a work plane in a 2D geometry or a 3D geometry part.

- Grouping Nodes by Space Dimension and Type
- Spatial Coordinate Variables

Base Vector System

Define a **Base Vector System** ( ) using a set of base vectors to form a coordinate system. The system does not necessarily need to be orthonormal, but when it is, declaring it orthonormal and linear enables simplifications that improve performance.

A vector $\mathbf{F}$ is represented by its contravariant components $[F_1, F_2, F_3]^T$ in the base of the new base vector system defined by the base vectors $\mathbf{u}_1$, $\mathbf{u}_2$, and $\mathbf{u}_3$ on the form $\mathbf{F} = F_1\mathbf{u}_1 + F_2\mathbf{u}_2 + F_3\mathbf{u}_3$. Expressing the base vectors as components in another system (for example, the global spatial system $[\mathbf{e}_x, \mathbf{e}_y, \mathbf{e}_z]$) gives the transformation matrix between bases:

$$\begin{bmatrix} F_x \\ F_y \\ F_z \end{bmatrix} = \begin{bmatrix} \mathbf{u}_1 & \mathbf{u}_2 & \mathbf{u}_3 \end{bmatrix} \cdot \begin{bmatrix} F_1 \\ F_2 \\ F_3 \end{bmatrix}$$

$$\begin{bmatrix} F_1 \\ F_2 \\ F_3 \end{bmatrix} = \begin{bmatrix} \mathbf{u}_1 & \mathbf{u}_2 & \mathbf{u}_3 \end{bmatrix}^{-1} \cdot \begin{bmatrix} F_x \\ F_y \\ F_z \end{bmatrix} = \begin{Bmatrix} |\mathbf{u}_i| = 1 \\ \mathbf{u}_i \cdot \mathbf{u}_j = \delta_{ij} \end{Bmatrix} = \begin{bmatrix} \mathbf{u}_1 & \mathbf{u}_2 & \mathbf{u}_3 \end{bmatrix}^{T} \cdot \begin{bmatrix} F_x \\ F_y \\ F_z \end{bmatrix}$$

where the last equality holds when the base vector system is orthonormal.

Note that you specify the base vectors as components in the default global coordinate system, which is context-dependent. The base vector system is therefore a relative coordinate system whose interpretation depends on the interpretation of the global system in the current context.

	The Curvilinear Coordinates interface can create special base vector systems in **Curvilinear System** nodes ( ). See Curvilinear Coordinates.

If this coordinate system is added as a subnode to a **Combined System** node, define where it will be active using a selection in the **Geometric Entity Selection** section. Also, the **Name** and **Coordinate names** fields are not available in this case.

SETTINGS

Coordinate names

In the **Coordinate names** table, the default names are entered — `x1`, `x2`, and `x3`. In planar 2D models, `x1` and `x2` are typically the in-plane coordinates, and `x3` is the out-of-plane coordinate. Note that these coordinate names are only used as indices for vector and tensor variable names, and cannot be evaluated as variables.

Base vectors

Define the **Base vectors** in terms of the global Cartesian coordinates (typically `x`, `y`, and `z`); one base vector on each row (two for 2D and three for 3D).

	For 1D models, select which basis vector is parallel to the 1D geometry. Select an option from the **In-plane index** list. The default is 1.

	For 2D models, select which basis vector to compute as the cross product of the two in-plane vectors specified. Select an option from the **Out-of-plane index** list. The defaults are `3` for a plane 2D model and `2` for an axisymmetric 2D model. For example, to map the first vector, `x1`, to the direction defined by $y = x$ in 2D, enter `1` in the fields under **x** and **y** on the **x1** row.

Simplifications

For some applications, only orthonormal coordinate systems can be used. Since the base vectors entered in a **Base Vector System** node are not necessarily orthonormal, these systems are by default not allowed in contexts requiring orthonormality. To make the coordinate system available in such contexts, select either the **Assume orthonormal** check box or the **Make orthonormal** check box. The former instructs automatic variable transforms to use the entered **Base vectors** directly, but treat them as orthonormal — if they are not, results will be incorrect. The **Make orthonormal** check box enables a polar decomposition of the base vector matrix into a rotation matrix and a stretch matrix. The rotation matrix — which is orthonormal — is kept, while the stretch matrix is discarded. This procedure

is computationally more expensive than assuming orthonormality but guarantees a truly orthonormal transformation matrix that will behave correctly in subsequent variable transforms.

RELATIVE TO SYSTEM FROM GEOMETRY

This section is available in 3D, if you have added any work plane to the geometry.

From the **Work plane** list, select **xy-plane** (the default, for a standard global Cartesian coordinate system) or select any work plane in the geometry sequence. If you choose a work plane, the work plane's coordinates **xw**, **yw**, and **zw** are used for the definition of the base vector.

	Go to Name for information about the **Settings** window **Label** and **Name**. Also see Settings and Properties Windows for Feature Nodes.

	• If you have the Nonlinear Structural Materials Module, see *Pressurized Orthotropic Container*: Application Library path **Nonlinear_Structural_Materials_Module/Plasticity/orthotropic_container**. • If you have the Structural Mechanics Module, see *Piezoelectric Shear-Actuated Beam*: Application Library path **Structural_Mechanics_Module/Piezoelectric_Effects/shear_bender**.

Boundary System

A **Boundary System** ( ) is a local base vector system on 2D boundaries ($\mathbf{t}$, $\mathbf{n}$) and on 3D boundaries ($\mathbf{t}_1$, $\mathbf{t}_2$, $\mathbf{n}$). Use it to apply loads and other boundary conditions in a normal or tangential direction on a boundary that is not aligned with the global Cartesian coordinate system.

	For 3D and 2D models, a **Boundary System** node is automatically added under **Definitions**.

Common applications for this coordinate system include specifying pressure or normal displacement on a surface.

To specify the boundary coordinate system, you specify the direction of the normal and a direction that is projected onto the boundary, normalized, and used as the first tangent vector. The normal direction is in most cases the outward-pointing normal vector, but you can reverse the normal direction. The general definition of the normal is the direction of the normal vector $\mathbf{n}$, which can be plotted using the variables for its components (typically `nx`, `ny`, and `nz`). See Normal Variables.

- In 2D, the local coordinate system is defined by ($\mathbf{t}_1$, $\mathbf{n}$, $\mathbf{t}_o$), representing the tangential and normal direction of the boundary. This coordinate system is always right-oriented. The second tangent direction ($\mathbf{t}_o$) is the cross product between normal vector ($\mathbf{n}$) and the first tangent direction ($\mathbf{t}_1$). This method always gives a right-oriented orthonormal system, unless the tangent direction is parallel to the normal.
- In 3D, the local coordinate system is defined by ($\mathbf{t}_1$, $\mathbf{t}_2$, $\mathbf{n}$), representing two tangential directions ($\mathbf{t}_1$ and $\mathbf{t}_2$) and one normal direction ($\mathbf{n}$). This coordinate system is always right-oriented but not always orthogonal. The second tangent direction ($\mathbf{t}_2$) is the cross product between the specified normal vector ($\mathbf{n}$) and the first tangent vector ($\mathbf{t}_1$). This method always gives a right-oriented orthonormal system, unless the tangent direction is parallel to the normal.

You can also reverse the normal on some boundaries and switch the domain normal on the exterior of some domains by right-clicking the **Boundary System** node and selecting **Reverse Normal** and **Domain Normal**, respectively. See Reverse Normal and Domain Normal.

SETTINGS

Frame

Select a **Frame**: **Deformed configuration** (the default), **Geometry configuration**, or **Reference configuration**. The deformed configuration follows the material whereas the reference configuration has fixed basis directions in the spatial frame. The geometry configuration is used to specify normal and tangential components of boundary conditions and refers to the undeformed geometry when using a Deformed Geometry interface.

Coordinate names

In the **Coordinate names** table, the default names are entered — `t1`, `t2`, and `n` (for 3D models) or `t1`, `n`, and `to` (for 2D models). Click the table cells to edit the names. To reverse the direction of the normal for the boundary system, select the **Reverse normal direction** check box.

Select an option from the **Create first tangential direction from** list: **Global Cartesian (spatial)** (the default), **Global Cartesian (material)**, **Global Cartesian (geometry)**, or any other applicable coordinate system that you have added. If **Global Cartesian (spatial)** is selected, select **x**, **y**, or **z** from the **Axis** list. If **Manual** is selected from the **Axis** list, default values are displayed for the local tangent variables `root.t1x`, `root.t1y`, and `root.t1z` (3D) or `root.t1x` and `root.t1y` (2D). Enter other values as needed to define a tangent direction by specifying directions for a local tangent plane in the **x**, **y**, and **z** fields.

	Go to Name for information about the **Settings** window **Label** and **Name**. Also see Settings and Properties Windows for Feature Nodes.

	Many examples use this coordinate system. For one example, see *Electric Sensor*: Application Library path **COMSOL_Multiphysics/Electromagnetics/electric_sensor**.

Reverse Normal

Add a **Reverse Normal** node ( ) as a subnode to a **Boundary System** node to reverse the normal on some boundaries.

In the **Boundary Selection** section, add the boundaries for which the boundary system's normal direction should be reversed.

Domain Normal

Add a **Domain Normal** node ( ) as a subnode to a **Boundary System** node to switch the normal direction on the exterior of some domains.

In the **Domain Selection** section, add the domain for which the boundary system's normal direction should be switched.

NORMAL DIRECTION

From the **Normal direction** list, choose **Outward** (the default) or **Inward** to define the normal direction on the exterior of the selected domains.

Combined System

A **Combined System** ( ) can be used in 1D, 2D, and 3D when you want to refer to different coordinate systems in different domains. It can then be used, for example, as a single coordinate system selection in a physics setting, where some material property is defined using different coordinate systems in different domains. Right-click the Combined System node to add any of the following coordinate systems:

- Base Vector System
- Mapped System
- Rotated System (2D and 3D only)
- Cylindrical System (2D and 3D only)
- Spherical System (3D only)
- System from Geometry (3D only)

For each added coordinate system, use the geometric entity selection to define where in the geometry that coordinate system is used.

SETTINGS

Frame

Select with respect to which **Frame** — **Material** (the default), **Mesh**, **Geometry**, or **Spatial** — the coordinate system is defined by the above transformations. Note that the actual coordinate names — typically **(x, y, z)** or **(X, Y, Z)** in 3D — are displayed for each frame, indicating which frames differ from each other in the current model.

	A coordinate system with **Frame** set to **Spatial** is orthonormal only in the spatial frame. Similarly, a **Material** system is orthonormal only in the material frame. Some physics require that coordinate systems used are orthonormal in a particular frame. For example, choose the **Material** frame if you want to use the coordinate system in a structural mechanics model.

Coordinate names

In the **Coordinate names** table, the default **Coordinate names** are entered — `x1`, `x2`, and `x3`.

Composite System

Use a **Composite System** ( ) to define a coordinate system that acts as a consecutive application of two other coordinate systems. The base vectors of a composite coordinate system are defined as the base vectors of a selected **Relative system** interpreted as relative to a selected **Base system**, which may be *relative* or *absolute*. The resulting composite system is relative or absolute depending on the selected base system, which in the latter case also decides the underlying frame type.

COORDINATE NAMES

In the **Coordinate names** table, the default names are entered — `x1`, `x2`, and `x3`. In planar 2D models, `x1` and `x2` are typically the in-plane coordinates, and `x3` is the out-of-plane coordinate.

INPUT SYSTEMS

From the **Base system** list, choose a relative or absolute coordinate system that define a set of base vectors relative to an underlying frame. Then from the **Relative system** list, choose a relative coordinate system whose base vectors will be interpreted as components in the selected Base system. Both the **Base system** and the **Relative system** can have the value **None**, which is interpreted as an identity mapping of axes. Other **Composite System** nodes are allowed provided that they do not cause a circular dependency.

Cylindrical System

A **Cylindrical System** ( ) can be used in 2D and 3D where rotational symmetry about the axis is required. The cylindrical coordinate system is not applicable in geometries with 2D axial symmetry. The local coordinate system is defined by (r, φ, a), where r represents the radial distance from the longitudinal axis, φ is the azimuthal angle (in the interval from $-\pi$ to π), and a is the distance from the origin along the longitudinal axis. In 2D models, only the origin can be specified, whereas in 3D models, the longitudinal axis direction, $\mathbf{a}$, and the radial base vector, $\mathbf{e}_r$ ($\varphi = 0$), can be specified as well. These direction vectors are automatically normalized.

The definitions of the cylindrical coordinates in terms of the global Cartesian coordinates $\mathbf{r} = \mathbf{r}(x, y, z)$ are

$$\begin{bmatrix} r \\ \varphi \\ a \end{bmatrix} = \begin{bmatrix} \left|\mathbf{r} - (\mathbf{r}_0 + \mathbf{a}(\mathbf{a} \cdot (\mathbf{r} - \mathbf{r}_0)))\right| \\ \operatorname{atan}\dfrac{(\mathbf{a} \times \mathbf{e}_r) \cdot (\mathbf{r} - \mathbf{r}_0)}{\mathbf{e}_r \cdot (\mathbf{r} - \mathbf{r}_0)} \\ \mathbf{a} \cdot (\mathbf{r} - \mathbf{r}_0) \end{bmatrix}$$

If this coordinate system is added as a subnode to a **Combined System** node, define where it will be active using a selection in the **Geometric Entity Selection** section. Also, the **Name** and **Coordinate names** fields and the **Frame** list are not available in this case.

SETTINGS

Frame

Select with respect to which **Frame** — **Spatial** (the default), **Mesh**, **Material**, or **Geometry** — the coordinate system is cylindrical as defined by the above transformations. Note that the actual coordinate names — typically **(x, y, z)** or **(X, Y, Z)** in 3D — are displayed for each frame, indicating which frames differ from each other in the current model.

	A coordinate system with **Frame** set to **Spatial** is orthonormal only in the spatial frame. Similarly, a **Material** system is orthonormal only in the material frame. Some physics require that coordinate systems used are orthonormal in a particular frame. For example, choose the **Material** frame if you want to use the coordinate system in a structural mechanics model.

Coordinate names

In the **Coordinate names** table, the default **Coordinate names** are entered — `r`, `phi`, and `a`. In planar 2D models, `r` and `phi` are in-plane polar coordinates, and `a` is the out-of-plane coordinate.

Origin

Specify the location of the **Origin** of the cylindrical coordinate system in the global Cartesian system. The default is an origin coinciding with the one from the global system.

Longitudinal axis

For 3D models, enter the **Longitudinal axis direction**. The default is the z direction in the global system.

Direction of axis

For 3D models, specify the **Direction of axis** φ **=0**, where φ is the azimuthal angle. The default direction is the x direction in the global system.

RELATIVE TO SYSTEM FROM GEOMETRY

This section is available in 3D, if you have added any work plane to the geometry.

From the **Work plane** list, select **xy-plane** (the default, for a standard global Cartesian coordinate system) or select any work plane in the geometry sequence. If you choose a work plane, the work plane's coordinates **xw**, **yw**, and **zw** are used for the definition of the origin and axis.

	Go to Name for information about the **Settings** window **Label** and **Name**. Also see Settings and Properties Windows for Feature Nodes.

Mapped System

Use a **Mapped System** ( ) to create a coordinate system that defines a mapping from the frame coordinate system.

A mapped system can deal with translated and rotated coordinate systems:

$$\begin{bmatrix} u_1 \\ u_2 \\ u_3 \end{bmatrix} = \begin{bmatrix} u_1(x, y, z) \\ u_2(x, y, z) \\ u_3(x, y, z) \end{bmatrix}$$

If this coordinate system is added as a subnode to a **Combined System** node, define where it will be active using a selection in the **Geometric Entity Selection** section. Also, the **Name** and **Coordinate names** fields and the **Frame** list are not available in this case.

SETTINGS

The **Frame** list is the same as for the Cylindrical System.

Coordinate names

In the **Coordinate names** table, the default names are entered — `x1`, `x2`, and `x3`. In planar 2D models, `x1` and `x2` are typically the in-plane coordinates, and `x3` is the out-of-plane coordinate.

Coordinate mapping

Under **Coordinate mapping**, the **Coordinate** column displays the **Coordinate names** with the **Expression** column displaying the associated mapped coordinate.

Simplifications

If required, select the **Assume orthonormal** check box. The program then uses the assumption that the settings define an orthonormal coordinate system.

	Go to Name for information about the **Settings** window **Label** and **Name**. Also see Settings and Properties Windows for Feature Nodes.

Rotated System

Use a **Rotated System** ( ) to define an orthonormal coordinate system which is rotated with respect to the reference system. In 2D, you can specify either an in-plane rotation angle or a full 3D rotation using Euler angles. In 3D, Euler angles (Z-X-Z) is the only option.

Full 3D rotations are specified as three consecutive Euler angles α, β, and γ, using a *Z-X-Z* convention. Rotation axes and angles are illustrated in Figure 5-4 where the resulting rotated system axes are denoted **X**, **Y**, and **Z**.

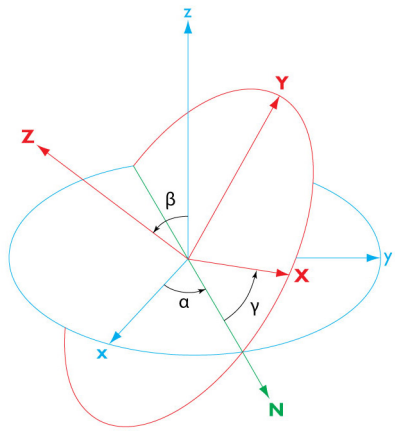

Figure 5-4: 3D Euler angles in a rotated coordinate system.

The transformation matrix defined by the Euler angles transforms components of a fixed vector **v** from the rotated coordinate system, $[v_X, v_Y, v_Z]$, to components in the global system, $[v_x, v_y, v_z]$, as follows:

$$\begin{bmatrix} v_x \\ v_y \\ v_x \end{bmatrix} = \begin{bmatrix} \cos\alpha\cos\gamma - \sin\alpha\cos\beta\sin\gamma & -\cos\alpha\sin\gamma - \sin\alpha\cos\beta\cos\gamma & \sin\beta\sin\alpha \\ \sin\alpha\cos\gamma + \cos\alpha\cos\beta\sin\gamma & -\sin\alpha\sin\gamma + \cos\alpha\cos\beta\cos\gamma & -\sin\beta\cos\alpha \\ \sin\beta\sin\gamma & \sin\beta\cos\gamma & \cos\beta \end{bmatrix} \cdot \begin{bmatrix} v_X \\ v_Y \\ v_Z \end{bmatrix}$$

In 2D models, you can choose to describe the rotated coordinate system by the rotation angle about a selected out-of-plane axis. This is a two-step process. You first select which axis of the rotated system should point into or out of the screen. This defines a new reference orientation for the axes remaining in-plane. Then specify a rotation angle relative to the new reference.

If this coordinate system is added as a subnode to a **Combined System** node, define where it will be active using a selection in the **Geometric Entity Selection** section. Also, the **Name** and **Coordinate names** fields are not available in this case.

COORDINATE NAMES

In the **Coordinate names** table, the default names are entered — `x1`, `x2`, and `x3`. In planar 2D models, `x1` and `x2` are typically the in-plane coordinates, and `x3` is the out-of-plane coordinate.

ROTATION

The rotation settings depend on the space dimension of the component to which the coordinate system belongs. For 2D components, first select an **Input method**: **In-plane rotation** (the default) or **General rotation**.

In-Plane Rotation Settings

When the input method is set to **In-plane rotation** in a 2D component, you specify the rotation as a single angle (in radians) representing the **Rotation about out-of-plane axis**. The **Out-of-plane axis** can be set to any of the three main axes, pointing either into or out of the screen. The default for planar 2D geometries is **Third out-of screen**, which leaves the **x** and **y** axes as in-plane reference axes. For axisymmetric geometries, the default is **Second out-of screen**, leaving the **r** and **z** axes in-plane.

General Rotation Settings

For 3D geometries and when **General rotation** has been chosen as input method in 2D, enter the **Euler angles (Z-X-Z)** (in radians) in the α, β, and γ fields (see the graphics in the **Settings** window for definitions of these angles). The default values are 0 for all angles.

RELATIVE TO SYSTEM FROM GEOMETRY

This section is available in 3D if you have added any work plane to the geometry.

From the **Work plane** list, select **xy-plane** (the default, for a standard global Cartesian coordinate system) or select any work plane in the geometry sequence. If you choose a work plane, the work plane's coordinates **xw**, **yw**, and **zw** are used for the definition of the rotated system.

	Go to Name for information about the **Settings** window **Label** and **Name**. Also see Settings and Properties Windows for Feature Nodes.

	With the MEMS Module, see *Gecko Foot*: Application Library path **MEMS_Module/Actuators/gecko_foot**.

Scaling System

Use a **Scaling System** ( ) to create a system that maps the geometry, as represented by the independent coordinates of an underlying frame, onto a virtual geometry represented by virtual scaling system coordinates. Physics interfaces that support infinite elements or perfectly matched layers accept the scaling system coordinates as being the physical domain, in which the underlying frame coordinates are seen as a parameterization. Therefore, using a scaling coordinate system you can arbitrarily deform the domain, essentially in the same way as when using Deformed Geometry with a Prescribed Deformation node.

	The Scaling System is only available for physics that support infinite elements or perfectly matched layers. See Infinite Element Domain.

The scaling coordinate system is defined as a map from real frame coordinates to virtual scaling system coordinates:

$$\begin{bmatrix} x_1 \\ x_2 \\ x_3 \end{bmatrix} = \begin{bmatrix} x_1(x,y,z) \\ x_2(x,y,z) \\ x_3(x,y,z) \end{bmatrix}$$

The selected frame coordinates (the setting is invisible if there is only one frame) are seen as a parameterization of the "true geometry" in which the physics is solved. What you specify in the **Coordinate mapping** table is therefore a "true position" for each point in the mesh, expressed in the frame coordinates. When applied to a domain with a compatible material model in a physics interface, the equations in that domain are first reformulated in terms of the virtual x_1, x_2, and x_3 coordinates but then automatically mapped back to the frame coordinates. This leads to explicit transformation expressions appearing in the equations.

SETTINGS

Under **Coordinate mapping**, the **Coordinate** column displays the virtual coordinate names with the **Expression** column displaying the map from underlying frame coordinates to virtual coordinates. The default expressions are the spatial coordinates x, y, and z, which means no scaling.

	Go to Name for information about the **Settings** window **Label** and **Name**. Also see Settings and Properties Windows for Feature Nodes.

Spherical System

Use a **Spherical System** ( ) to define a spherical coordinate system in 3D by its origin, zenith axis, and azimuth axis.

The coordinates of a local spherical coordinate system are (r, θ, φ), where r represents the radial distance from the origin, θ is the inclination (in the interval from 0 to π), and φ is the azimuthal angle (in the interval from $-\pi$ to π). Specify — in terms of the global Cartesian coordinates x, y, and z — the position of the origin, the axis $\theta = 0$ (the zenith axis, $\mathbf{Z}$), and the axis $\theta = \pi/2$, $\varphi = 0$ (the azimuth axis, $\mathbf{A}$). The direction vectors are automatically normalized.

This is a mapped normalized coordinate system using the following transform in global coordinates

$$r = |\mathbf{r} - \mathbf{r}_0|$$

$$\theta = \operatorname{acos}\left(\frac{\mathbf{Z} \cdot (\mathbf{r} - \mathbf{r}_0)}{|\mathbf{r} - \mathbf{r}_0|}\right)$$

$$\varphi = \operatorname{atan2}(\mathbf{r}_\perp \cdot (\mathbf{Z} \times \mathbf{A}), \mathbf{r}_\perp \cdot \mathbf{A})$$

where $\mathbf{r}_0$ is the position of the origin, $\mathbf{Z}$ is a unit vector along the axis $\theta = 0$, and the component of $\mathbf{r} - \mathbf{r}_0$ in the plane $\theta = \pi/2$ is

$$\mathbf{r}_\perp = (\mathbf{r} - \mathbf{r}_0 - \mathbf{Z}(\mathbf{Z} \cdot (\mathbf{r} - \mathbf{r}_0)))$$

If this coordinate system is added as a subnode to a **Combined System** node, define where it will be active using a selection in the **Geometric Entity Selection** section. Also, the **Name** and **Coordinate names** fields and the **Frame** list are not available in this case.

SETTINGS

The **Frame** list is the same as for the Cylindrical System.

In the **Coordinate names** table, the default **Coordinate names** are entered — `r`, `theta`, and `phi`.

Enter the location of the **Origin** in the global Cartesian coordinate system. The default is an origin coinciding with that of the global system.

Enter the **Direction of axis** θ**=0** (the *zenith axis*). The default axis direction is the z direction in the global Cartesian system.

Define the **Direction of axis** θ**=**π**/2,** φ **=0** (the *azimuth axis*). The default direction is the x direction in the global Cartesian system.

RELATIVE TO SYSTEM FROM GEOMETRY

This section is available in 3D, if you have added any work plane to the geometry.

From the **Work plane** list, select **xy-plane** (the default, for a standard global Cartesian coordinate system) or select any work plane in the geometry sequence. If you choose a work plane, the work plane's coordinates **xw**, **yw**, and **zw** are used for the definition of the origin and axis.

	Go to Name for information about the **Settings** window **Label** and **Name**. Also see Settings and Properties Windows for Feature Nodes.

System from Geometry

Use a **System from Geometry** ( ) coordinate system to create a coordinate system that is aligned with a work plane in a 3D geometry sequence or geometry part. Such a coordinate system makes it possible to specify geometric primitives and to transform geometry features using a coordinate system that is aligned with the surface of some other geometric primitive, for example. It can also make it easier to specify the directions of anisotropic materials.

If this coordinate system is added as a subnode to a **Combined System** node, define where it will be active using a selection in the **Geometric Entity Selection** section. Also, the **Name** and **Coordinate names** fields and the **Frame** list are not available in this case.

SETTINGS

The **Frame** list is the same as for the Cylindrical System or Mapped System.

In the **Coordinate names** table, the **Coordinate names** are entered — `x1`, `x2`, and `x3` by default.

SYSTEM FROM GEOMETRY

In this section, you select the work plane that defines the coordinate system.

If there are work planes both in the geometry and in some geometry parts, you can choose the source of the work plane from the **Take work plane from** list: **This geometry** (the default), to use a work plane from the geometry sequence in the component, or a part instance with a work plane that is used in the geometry.

From the **Work plane** list, select any of the work planes in the geometry sequence or part instance. The selected work plane then defines the coordinate system.

Identity and Contact Pairs

Pairs are available for assemblies (that is, geometries created by not forming a union of all geometry objects as the final step), where there is a need to connect boundaries between parts. By default, pairs are created automatically when forming an assembly. There are two types of pairs — identity pairs and contact pairs.

About Identity and Contact Pairs

IDENTITY PAIRS

An *identity pair* (**Identity Boundary Pair** ( )) is a pair that, by default, makes the fields across two connected boundaries (one from each connecting object in an assembly) continuous. This is equivalent to the continuity that is obtained by default on interior boundaries in a geometry created by forming a union. Some physics provide special boundary conditions for identity pairs to model "slit conditions" such as resistive layers. You can specify boundary conditions for these pairs from the **Pairs** submenu at the bottom of the boundary condition part of the context menu for the physics feature node. The nodes in the **Model Builder** that represent pair boundary conditions use an icon with a pair symbol in the lower-left corner: . There are also similar **Identity Edge Pair** ( ) and **Identity Point Pair** ( ) pair nodes.

CONTACT PAIRS

A *contact pair* ( ) is a pair that define boundaries where the parts can come into contact but cannot penetrate each other under deformation for modeling of structural contact and multiphysics contact.

- Contact pair modeling requires the Structural Mechanics Module or MEMS Module. Details about this pair type can be found in the respective product's user's guide.
- In a continuity feature, it is possible to select either an identity pair or a contact pair. Selecting a contact pair is only meaningful in conjunction with a structural mechanics interface containing a **Contact** node in which the contact state for the pair is computed. If the boundaries are in contact, then the continuity is also active.

FALLBACK BOUNDARY CONDITIONS ON NONOVERLAPPING PARTS

For pairs where parts of the boundaries do not overlap you need to specify boundary conditions for the non-overlapping parts, which typically represent exterior boundaries outside of the overlapping area. These boundary conditions (*fallback* boundary conditions) appear as subnodes to the pair's boundary condition node in the **Model Builder**. By default, the default boundary condition for exterior boundaries is added to the nonoverlapping parts. If you want to use another boundary condition for any of the nonoverlapping parts, right-click the pair's boundary condition node (**Continuity**, for example) and select any of the standard boundary conditions from the **Fallback Features** submenu. In the **Settings** window, the selection includes all applicable boundaries by default, but a separate boundary condition can be added for only a subset of the pair boundaries. In the following illustration, which shows a simple example with two partially overlapping rectangles, there is one identity pair that consists of two boundaries, each with a nonoverlapping part. You can right-click the pair's boundary condition node and, from the **Fallback**

Features submenu, add one fallback boundary condition for the top boundary and another fallback boundary condition for the bottom boundary if desired.

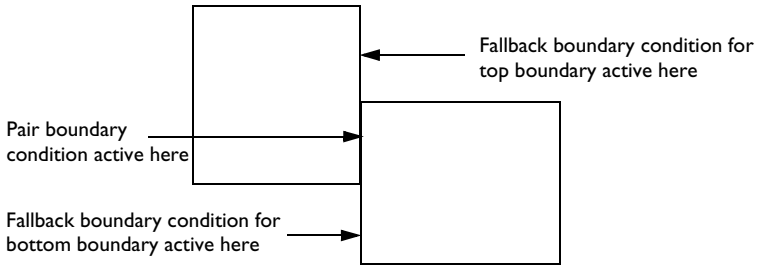

The options for the available fallback conditions are based on the physics interface and the license type (see Figure 5-5).

	With only a few exceptions for the Solid Mechanics interface or other physics interfaces using Solid Mechanics functionality, all subnodes to pairs are fallback nodes.

When additional fallback feature nodes are added, the node has an indicator in the lower-left corner ( ) identifying it as a fallback feature node.

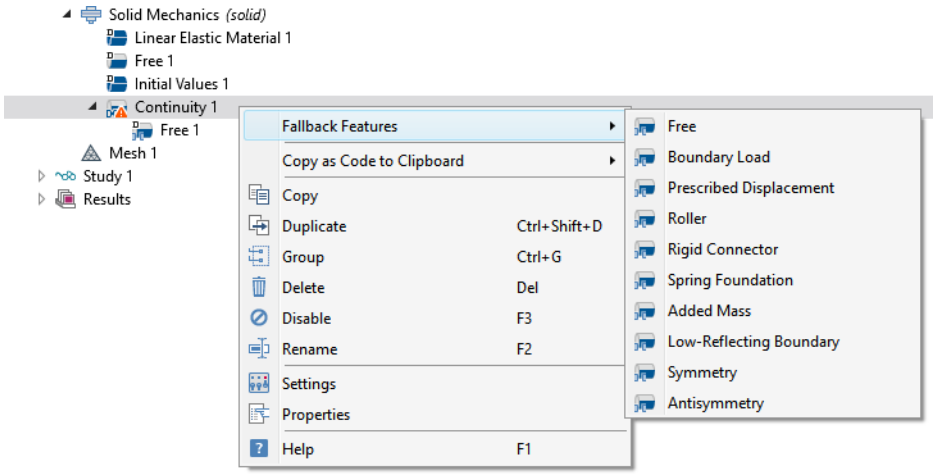

Figure 5-5: An example of the Fallback Features submenu for a Continuity pair added to the Solid Mechanics interface.

To add Pairs to any Component:

- In the **Definitions** toolbar, select features from the **Pairs** menu, or
- Right-click the **Definitions** ( ) node and choose an option from the **Pairs** submenu.

	Go to Pair Name for information about the **Settings** window **Pair name**. Also see Settings and Properties Windows for Feature Nodes.

Identity Pairs

Use an identity pair node (for an identity boundary pair) to specify two selections of boundaries that overlap but belong to different parts of an assembly. Then assign a boundary condition to connect the physics nodes in the

two parts in a physics interface. Identity pairs connect overlapping boundaries in different connecting parts of an assembly.

The **Identity Boundary Pair** ( ) is the most commonly used node. For 3D models, the **Identity Edge Pair** is available (, which can be useful for connecting two edges in a shell model, for example. You can also choose the **Identity Point Pair** ( ).

	Go to Pair Name for information about the **Settings** window **Pair name**. Also see Settings and Properties Windows for Feature Nodes.

GENERAL

Enter a **Pair name**. It is used as a suffix in names of operators and variables defined by the pair. The default **Pair type** is **Identity pair**, or select **Contact pair**. Identity and Contact pairs are both available for boundary pairs, and Identity pairs are also available on edge and point levels (where there is no **Pair type** list).

Manual control of selections

If the pair was created automatically when forming an assembly, the **Manual control of selections** check box is visible. Click to clear this check box to be able to make manual changes to the **Source Boundaries** and **Destination Boundaries** selections. Pairs in manual mode do not have their selections updated when the geometry sequence is rebuilt.

The operator mapping an expression E on the source side to the destination side is denoted `src2dst_`*`pn`*`(`*`E`*`)`, where *_pn* is the pair name.

For an **Identity pair**, the variable `src2dst_`*`pn`* (defined on the destination) is `1` where there is a corresponding source point, and `0` otherwise. The corresponding operator and variable for use on the source side are denoted `dst2src_`*`pn`*.

Similarly, for a **Contact pair** there is an operator `src2dst_`*`pn`*`_mph` that is suited for use in multiphysics coupling. The variable `geomgap_dst_`*`pn`* is the geometric gap between the source and the destination, seen from the destination side (following the normal of the destination boundary). The corresponding operators and variables for use on the source side are denoted `dst2src_`*`pn`*, `dst2src_`*`pn`*`_mph`, `geomgap_src_`*`pn`*.

SOURCE BOUNDARIES AND DESTINATION BOUNDARIES

The destination boundaries should overlap the source boundaries. The condition that connects the physics nodes on the destination and source boundaries is specified in the physics interface. For example, it can be a constraint that constrains a dependent variable (temperature, for example) on the destination side to be equal to a dependent variable on the source side.

Click the **Active** button to toggle between turning ON and OFF selections.

Then define the source or destination boundaries. Select **Manual** or **All boundaries** for the boundaries on the source or destination side. If **Manual** is selected, click in the **Graphics** window to add boundaries to the **Selection** section. If required, click the **Swap Source and Destination** button ( ).

Select **Manual** or **All boundaries** for the boundaries on the source side or the destination side. If **Manual** is selected, click in the **Graphics** window to add boundaries to the **Selection** section. If required, click the **Swap Source and Destination** button ( ) to swap the source boundaries and the destination boundaries.

	For **Identity Edge Pairs** and **Identity Point Pairs**, edges and points, respectively, replace boundaries in the selections of the pair's source and destination.

FRAME

If there are several frames in the model, the **Frame** section is visible. Select the **Source frame** and the **Destination frame**. Source and destination points are connected if their coordinates in their respective frames are equal.

	With the MEMS Module, see *Gecko Foot*: Application Library path **MEMS_Module/Actuators/gecko_foot**

Contact Pair

Use a **Contact Pair** node ( ) to specify two selections of boundaries that cannot penetrate each other under deformation. The contact pairs define boundaries for parts that can come into contact (boundaries that cannot penetrate each other under deformation). For more information about contact modeling and guidelines for selecting source and destination boundaries for contact pairs, see the Structural Mechanics Module or MEMS Module documentation.

	Go to Pair Name for information about the **Settings** window **Pair name**. Also see Settings and Properties Windows for Feature Nodes.

GENERAL

This section is the described for the Identity Pairs except that the default **Pair type** is **Contact pair**.

SOURCE BOUNDARIES AND DESTINATION BOUNDARIES

The contact algorithm constrains the destination boundaries so that they do not penetrate the source boundaries.

Click the **Active** button to toggle between turning ON and OFF selections.

Then define the source or destination boundaries. Select **Manual** or **All boundaries** for the boundaries on the source or destination side. If **Manual** is selected, click in the **Graphics** window to add boundaries to the **Selection** section. If required, click the **Swap Source and Destination** button ( ) to swap the source boundaries and the destination boundaries.

ADVANCED

The **Search method** defaults to **Fast** — the algorithm only keeps track of source and destination points that have a distance less than a certain *search distance*. Select **Direct** for a slower but more robust search.

The **Mapping method** list is by default set to **Deformed configuration**. This setting means that whenever the source or destination has moved, a new search for possible contact points is made. If you know that the movements of the source and destination are small, selecting **Initial configuration** can be more efficient. In this case, a pairing between source and destination points is computed based on the initial configuration and always stays the same. This approach works well if the distance between source and destination is initially smaller than the search distance, and movements in the tangential direction are small.

Select the **Manual control of search distance** check box to tune the search distance (SI unit: m). By default, the search distance is taken as 0.01 times the diagonal of the geometry's bounding box. If the **Manual control of search distance** check box is selected, enter a different value in the **Distance** field.

You can use the **Extrapolation tolerance** setting (a fraction of the element length; default 10^{-4}) to effectively extend the source and destination boundaries slightly outside the selections. The size of this extension is equal to the extrapolation tolerance multiplied with the mesh element size.

	For a contact pair, the fallback boundary condition is applied to all parts of the boundaries currently not in contact.

	• With the MEMS Module, see *Piezoelectric Valve*: Application Library path **MEMS_Module/Piezoelectric_Devices/piezoelectric_valve**. • With the Nonlinear Structural Materials Module, see *Snap Hook*: Application Library path **Nonlinear_Structural_Materials_Module/Plasticity/snap_hook**. • With the Structural Mechanics Module, see *Cylinder Roller Contact*: Application Library path **Structural_Mechanics_Module/Verification_Examples/cylinder_roller_contact**.

Probes

About Probes

Probes ( ) monitor the development of a scalar-valued quantity (real or complex-valued number) from a time-dependent, frequency-domain, or parametric simulation by two different results presentations: tabulated data and 1D graph plots. You can probe while solving, as a monitor and diagnostic tool, and probe after the computation is finished for results analysis. On top of this functionality, a probe variable in the model component's namespace and with a global evaluation scope is also defined. The probe variable's name appears in the **Probe variable** field. You can use this variable as any other variable in, for example, equations, boundary conditions, or a stop condition.

Plot while solving is a technique used to briefly interrupt the simulation and launch some predefined plot commands and then continue with the simulation. Both normal plots and graphs can be plotted for probes during the simulation.

There are these types of probes (see Table 5-18 for the icon by space dimension):

- *Domain probes*, *boundary probes*, and *edge probes* make it possible to probe the average, minimum, maximum, or integral of a field quantity over a domain, on a boundary, or along an edge.
- *Domain point probes* and *boundary point probes* provide the value of some field quantity at a point in the domain or on a boundary. Any point within the domain or on the boundary can be defined.
- Use *Global variable probes* ( ) for probing the value of any global variable.

The probes automatically create a **Probe Table** node for displaying numerical results in the **Table** window and an associated plot group with a **Probe Table Plot** node that plots the probe data as a line graph in a separate **Probe Plot** window. For further processing, the probes also add datasets such as **Domain Point Probe** datasets ( ), which give access to the probe data. For further control, specify the table and plot window each probe uses.

To add a Probe to any Component:

- In the **Definitions** toolbar, select features from the **Probes** menu, or
- Right-click the **Definitions** ( ) node and choose an option from the **Probes** submenu.

When the simulation has finished, click the **Update Results** button ( ) in the probe **Settings** window (or in the **Definitions** toolbar) to change the settings for a probe and update the results information. Then right-click the **Definitions** node (or the **Probes** node if the **Definitions** nodes are grouped by type) and select **Update Probes**.

TABLE 5-18: PROBE TYPES AND ICONS BY SPACE DIMENSION

PROBE TYPE	3D	2D	1D
Domain			
Boundary			
Edge		—	—
Domain Point			—
Boundary Point		—	—
Global Variable			

Getting Results While Solving

Common Settings for Probes

VARIABLE NAME

For all **Probes** you must specify a **Variable name** that is unique within the model component where the feature is added. You can use this Variable name in expressions, and it is also the node's **Tag**. A unique default Variable name is always generated when the node is created.

SOURCE SELECTION

The source selection defines the source for the probes — the part of the geometry over which the program computes the probes.

From the **Geometric entity level** list, select **Manual** or based on the probe type, **All domains**, **All boundaries**, **All edges**, or **All points** from the **Selection** list. If **Manual** is selected, select geometric entities in the **Graphics** window.

EXPRESSION

In the **Expression** section you can:

- Enter a text string with your own expression.
- Click the **Replace Expression** button to select a predefined quantity and replace the contents of the **Expression** field with the corresponding variable.
- Click the **Insert Expression** button to insert the corresponding variable at the current position in the **Expression** field.
- Select a **Table and plot unit** from the list. You can select from a predefined number of applicable units for the quantity that the variable represents, but you can also click in the unit's text field and type any compatible unit for that quantity to use a unit that is not in the list (for example, `mi/h` for miles per hour as a unit for a velocity quantity).
- Select the **Description** check box to enter a description (or edit the default).

- About Parameters, Variables, Variable Utilities, and Expressions
- Entering Ranges and Vector-Valued Expressions
- Expressions and Predefined Quantities

TABLE AND WINDOW SETTINGS

By default, COMSOL Multiphysics uses a probe table (typically **Probe Table 1**) under **Tables** and a probe table plot (typically **Probe Table Plot 1**) in a **Probe 1D Plot Group** node, which appears in a separate plot window for probe plots (typically **Probe Plot 1**). To organize and group multiple probes, control the table and plot window to use for the probe results:

From the **Output table** list, select **Default**, **New table**, or any existing probe table. If an existing probe table is selected, click the **Go to Source** button ( ) to move to the selected **Probe Table** node under **Tables**.

From the **Plot window** list, select **Default**, **New window**, or any existing plot window. Click the **Add Plot Window** button( ) to create a new plot window and make it the default for this list.

By default, for both the **Output table** and **Plot window**, COMSOL Multiphysics uses a probe table or probe table plot that is created automatically. If **Default** is selected, COMSOL Multiphysics updates the list to show the name of the default probe table or probe plot window after the solution process.

Domain Probe, Boundary Probe, and Edge Probe

Use a **Domain Probe** ( ), **Boundary Probe** ( ), or **Edge Probe** ( ) to monitor the development of a scalar-valued quantity (real or complex-valued number) from a dynamic simulation (time-dependent, frequency-domain, or parametric solution).

	Go to Common Settings for Probes for information about the **Variable name**, **Source Selection**, **Expression**, and **Table and Window Settings** sections.

PROBE SETTINGS

Select an option from the **Type** list: **Average** (the default), **Maximum**, **Minimum**, or **Integral** depending on what type of value takes over the domain, boundary, or edge that you want the probe to compute and output. If needed, enter or edit a name for the **Probe variable**. The defaults are `dom1` for a Domain Probe, `bnd1` for a Boundary Probe, and `edge1` for an Edge Probe.

INTEGRATION SETTINGS

If you have selected **Average** or **Integral** from the **Type** list, the **Integration Settings** section contains the following settings:

- From the **Method** list, select **Integration** (the default) or **Summation**. Only reaction forces use the summation method.
- If desired, for the **Integration** method only, enter an integer value in the **Integration order** field (default: 4). See integration order in the *Glossary*.

When working with multiple frames for any type of probe, you can also select a **Frame** — **Spatial**, **Material**, **Geometry**, or **Mesh** — followed by the coordinate names: typically **(x, y, z)** or **(X, Y, Z)** depending on the physics in 3D, for the volume element to be used in the integration.

If the component's geometry is a 1D or 2D axisymmetric geometry, and the probe **Type** setting is set to **Average** or **Integral**, the **Compute surface integral** (for Domain Probe nodes in 1D axial symmetry and Boundary Probe nodes in 2D axial symmetry) and **Compute volume integral** (Domain Probe nodes in 2D axial symmetry) check boxes are selected by default to compute an average or integral that takes the axial symmetry into account. COMSOL Multiphysics multiplies the expression (integrand) with `2*pi*r` or `pi*r` prior to integration to compute the corresponding surface or volume integral.

	• With the Batteries & Fuel Cells Module: For a boundary probe example, see *Edge Effects in a Spirally Wound Lithium-Ion Battery*: Application Library path **Batteries_and_Fuel_Cells_Module/Batteries,_Lithium-Ion/li_battery_spiral_2d**. For a domain probe example, see *Mass Transport Analysis of a High Temperature PEM Fuel Cell*: Application Library path **Batteries_and_Fuel_Cells_Module/Fuel_Cells/ht_pem**. • With the Nonlinear Structural Materials Module and for a boundary probe example, see *Snap Hook*: Application Library path **Nonlinear_Structural_Materials_Module/Plasticity/snap_hook**.

Domain Point Probe

Use a **Domain Point Probe** ( ) to monitor the development of a real or complex-valued number from a dynamic simulation (a time-dependent, frequency-domain, or parametric study). By default a Point Probe Expression subnode is added, or right-click **Domain Point Probe** to add additional nodes.

POINT SELECTION

When working with multiple frames, select a **Frame** — **Spatial**, **Material**, **Geometry**, or **Mesh** — followed by the coordinate names, typically **(x, y, z)** or **(X, Y, Z)** in 3D depending on the physics.

For 3D models, select a **Line entry method**: **Point and surface normal** (the default), **Point and direction**, **Two points**, or **None** to define a location for the point where you want to add a probe.

For **Point and surface normal**, **Point and direction**, or **Two points**, enter a **Depth along line** or use the slider to select a value between 0 and 1 to determine the probe location along the line anywhere from the starting point (0) to the ending point (1).

- For **Point and surface normal**, click at a position on the surface of the geometry in the **Graphics** window to define a point. The direction becomes the inward surface normal as defined by the geometry, which for an exterior boundary means that the probe location can be anywhere from the start position to the end of the geometry in the normal direction. See the figure below.
- For **Point and direction**, click at a position on the surface of the geometry in the **Graphics** window to define a point. The direction becomes that of a ray directed away from the point in the current camera view (that is, the direction depends on the view).
- For **Two points**, from the **Point being modified** list, select **First point** and click on the geometry in the **Graphics** window to define the first point (starting point). Then select **Second point** and click to define the second point (endpoint) to define a line between the two points.

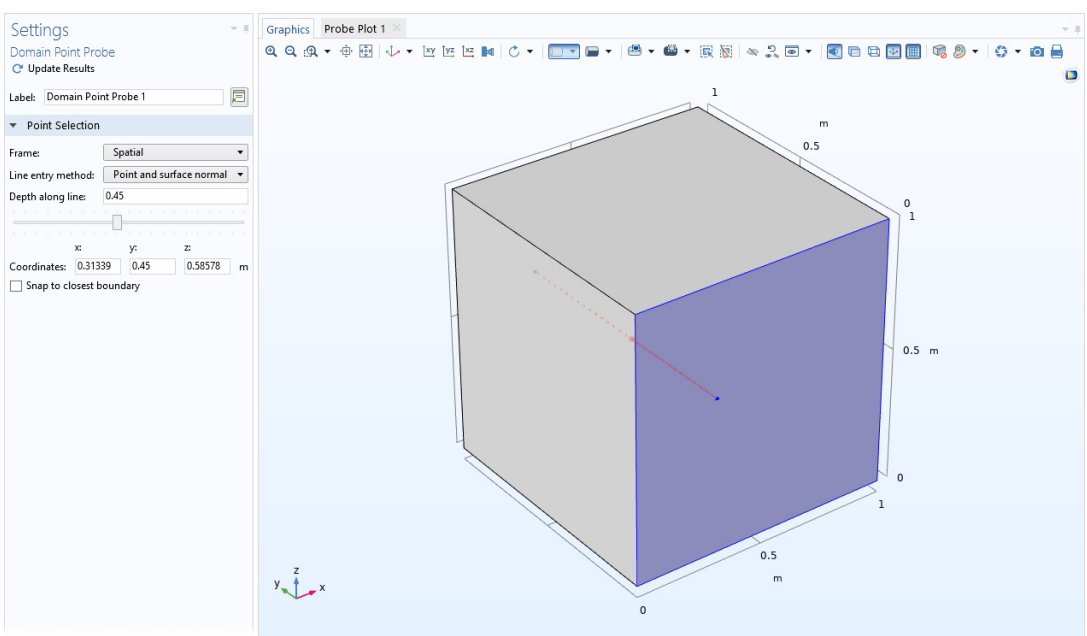

Figure 5-6: A point probe location defined as the location that is at 45% along the line defined by a point and a surface normal.

In 3D and for the line entry method **None** in 3D, enter **Coordinates**: enter **x** and **y** coordinates (2D) or **x**, **y**, and **z** coordinates (3D). You can also adjust the computed coordinates when you use any of the other line entry methods in 3D.

Select the **Snap to closest boundary** check box to snap the point to the boundary of the geometry closest to that point when the probe is evaluated.

	Process Control Using a PID Controller: Application Library path **COMSOL_Multiphysics/Multiphysics/pid_control**

Boundary Point Probe

Use a **Boundary Point Probe** ( ) to monitor the development of a scalar-valued quantity (real or complex-valued number) from a dynamic simulation (time-dependent, frequency, parametric). By default a Point Probe Expression subnode is added, or right-click **Boundary Point Probe** to add additional subnodes.

BOUNDARY SELECTION

Select a single boundary to add to the **Selection**.

POINT SELECTION

When working with multiple frames, select a **Frame** — **Spatial**, **Material**, **Geometry**, or **Mesh** — followed by the coordinate names: typically **(x, y, z)** or **(X, Y, Z)** depending on the physics in 3D.

Enter the **Coordinates**. A red dot indicates the position of the point on the selected surface in the **Graphics** window. Click the surface to move the point, or enter **x**, **y**, and **z** coordinates. If the point is not on the boundary, the probe location becomes the closest point on the boundary, with coordinates indicated by **On surface** under the fields.

Point Probe Expression

A **Point Probe Expression** ( ) is automatically added as a subnode to a Domain Point Probe and a Boundary Point Probe. Right-click the main node to add additional **Point Probe Expression** subnodes. Under **Probe Settings**, edit or enter a name for the **Probe variable**. The default name is `ppb1`.

	Go to Common Settings for Probes for information about the **Variable name**, **Expression**, and **Table and Window Settings** sections.

Global Variable Probe

Use a **Global Variable Probe** ( ) to monitor the development of a scalar-valued quantity (real or complex-valued number) from a dynamic simulation (time-dependent, frequency, parametric). Under **Probe Settings**, edit or enter a name for the **Probe variable**. The default name is `var1`.

	Go to Common Settings for Probes for information about the **Variable name**, **Expression**, and **Table and Window Settings** sections.

	With the Corrosion Module, see *Estimation of Corrosion Kinetics Parameters*: Application Library path **Corrosion_Module/Galvanic_Corrosion/corrosion_parameter_estimation**. With the RF Module, see *Microwave Filter on PCB with Stress*: Application Library path **RF_Module/Filters/pcb_microwave_filter_with_stress**.

Infinite Elements, Perfectly Matched Layers, and Absorbing Layers

Simulation of Infinite Domains

Simulation of unbounded or infinite domains is a challenge encountered in many types of physics. Normally, any physics simulates a process within a bounded domain represented by the geometry drawn in, or imported into, COMSOL Multiphysics. But the domain is often delimited by artificial boundaries inserted to limit the extent of the model to a manageable *region of interest*. You might not be interested in the details of the solution far away from any sources, loads, or material inhomogeneities, but the solution inside the region of interest must not be affected by the presence of the artificial boundaries. You simply want it to behave as if the domain was of infinite extent. In general, for field problems, unless the boundaries of the simulated device correspond to well-defined boundary conditions (such as a constant electric potential), then you need to include sufficient surrounding volume, so that the external boundaries of the computational space can be specified in a way that does not interfere with computations of the correct fields in or on the device that you are modeling.

Artificial truncation of the domain can be handled in several ways. Some physics interfaces include special boundary conditions to absorb outgoing propagating waves without spurious reflections, so-called low-reflecting boundary conditions. Others allow impedance boundary conditions, which can account for a finite impedance between the model boundary and a reference at infinity. Such boundary conditions are often efficient and useful but lack some generality and sometimes accuracy.

Another way to accomplish the same desired effect is to apply a coordinate scaling to a layer of virtual domains surrounding the physical region of interest. For stationary and transient problems, these virtual domains can be stretched out toward infinity, giving rise to *infinite elements*. To absorb outgoing waves in a frequency-domain problem, you must instead stretch the virtual domains into the complex plane, creating so-called *perfectly matched layers* (PMLs). In addition, for transient problems using a time-explicit solver, you can add an *absorbing layer,* which acts like an effective nonreflecting-like boundary conditions.

The Infinite Element Domain, Perfectly Matched Layer, and Absorbing Layer nodes are only available with the following add-on products for applicable physics interfaces:

- Infinite Element Domain: AC/DC Module, Structural Mechanics Module, MEMS Module, Heat Transfer Module, Chemical Reaction Engineering Module, Subsurface Flow Module, Batteries & Fuel Cells Module, Electrodeposition Module, Corrosion Module, Electrochemistry Module, and Plasma Module.
- Perfectly Matched Layer: Acoustics Module, RF Module, Wave Optics Module, Structural Mechanics Module, and MEMS Module,
- Absorbing Layer: Acoustics Module, RF Module, and Wave Optics Module

Because of their common background as coordinate stretching, infinite elements and PMLs in COMSOL Multiphysics share a number of important properties. They share part of the user interface and many modeling principles can be translated directly from one to the other. In the description below, infinite elements and PMLs are therefore sometimes referred to collectively as *scaling systems*.

The Scaling System node provides direct access to the coordinate stretching machinery underlying PMLs and infinite elements.

Standard Geometry Configurations

Automatic scaling systems are available in COMSOL Multiphysics for three distinct geometrical configurations: **Cartesian**, **Cylindrical**, and **Spherical**. Which ones you can use depends on the space dimension of the Component.

	The choice of a Cartesian, cylindrical or spherical configuration depends on the shape of your corresponding 3D geometry outline (box, cylinder, or sphere). It has no formal connection to what base coordinate system your geometry is using (but Cartesian configurations will never apply in 2D axisymmetry, and spherical configurations will never apply in planar 2D for obvious reasons).

Plane 2D Models

The available scaling types in plane 2D models are **Cartesian** and **Cylindrical**. Cartesian domains are stretched in one or two directions depending on whether they are attached to an edge or to a corner of the physical region of interest.

	It is important that separate, normally quadratic, domains are drawn at the corners.

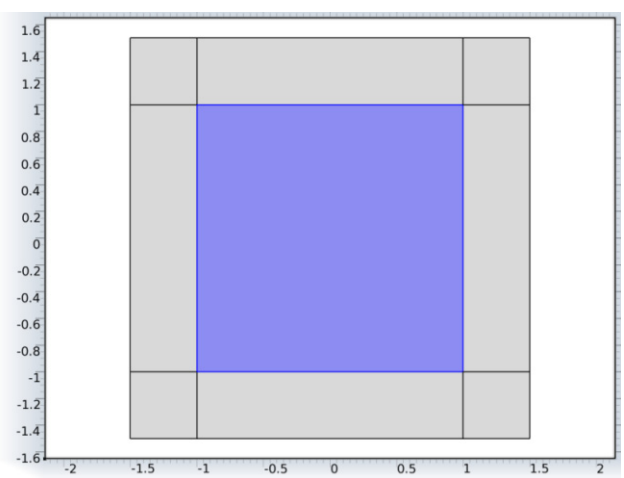

Figure 5-7: Typical Cartesian scaling configuration. Note the distinction between edge and corner domains.

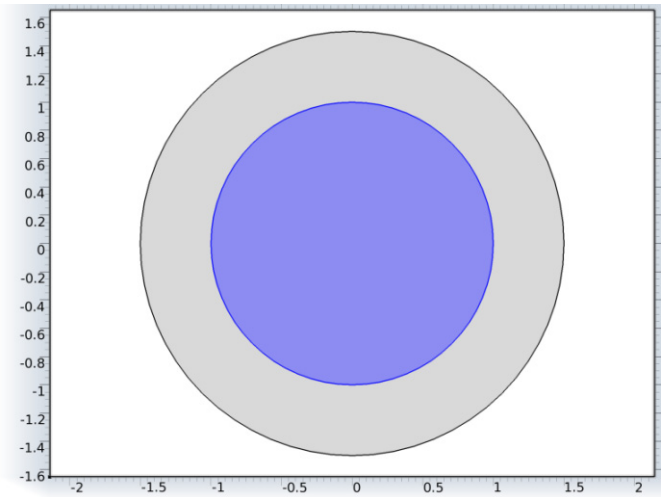

Figure 5-8: Example of cylindrical scaling configuration in plane 2D. You must specify the centerpoint of the model when different from the origin of the coordinate system.

AXISYMMETRIC 2D MODELS

The available scaling types in 2D axisymmetric models are **Cylindrical** and **Spherical**. The axisymmetric cylindrical configuration, from the practical point of view, behaves identically to the plane 2D Cartesian option. Similarly, the axisymmetric spherical scaling is similar to plane 2D cylindrical scaling, except that it is always centered on the axis.

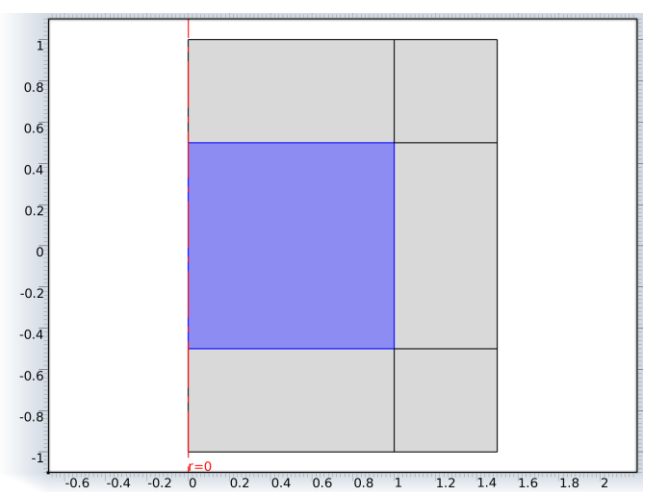

Figure 5-9: Axisymmetric cylindrical scaling uses domains of three distinct types: with radial stretching, with axial stretching, and with both radial and axial stretching. The latter are the corner zones, which must be drawn as distinct domains.

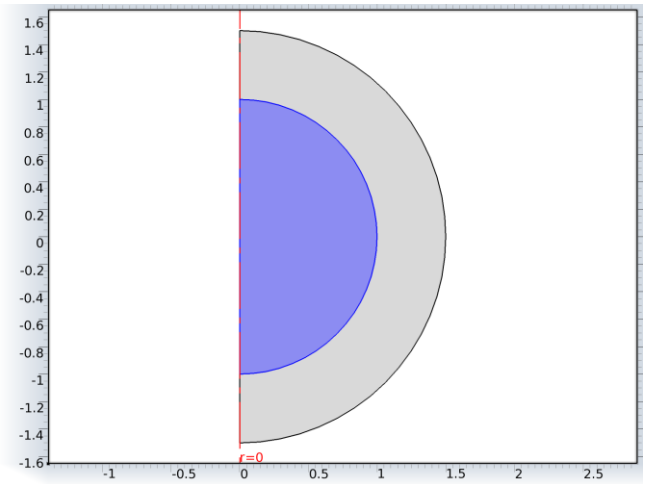

Figure 5-10: Axisymmetric spherical scaling assumes radial stretching in an annulus centered at a point on the axis. If the centerpoint is not the origin of the coordinate system, you must specify its axial position.

3D MODELS

The available scaling types in 3D are **Cartesian**, **Cylindrical** and **Spherical**. The Cartesian scaling domains are of three different types. Depending on whether they are attached to a surface, an edge, or a point in the physical domain, they are stretched in one, two, or three directions, respectively. Cylindrical scaling domains are also of three different types: radially stretched, axially stretched, and stretched both radially and axially. Spherically scaled domains are always stretched only in the spherical domain's radial direction.

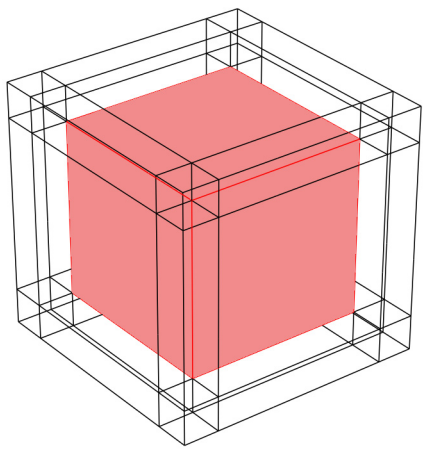

Figure 5-11: There are three different types of Cartesian scaling domain, attached to faces, edges and corners, respectively. They differ in the number of scaled directions. Note that the edge and corner zones must be drawn as distinct domains in the geometry.

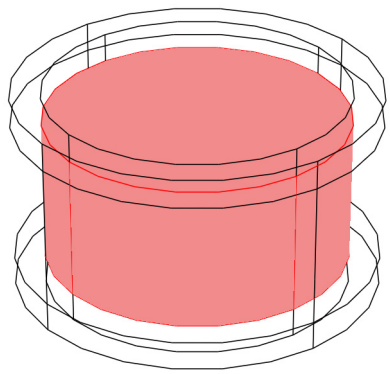

Figure 5-12: The three different types of cylindrical scaling domain are attached to the sides, top and bottom, and edges of the cylindrical physical domain. The position and orientation is specified as a centerpoint and an axial direction. The scaling system domains are stretched in the radial direction, away from the axis, in the axial direction, and in both radial and axial direction, respectively.

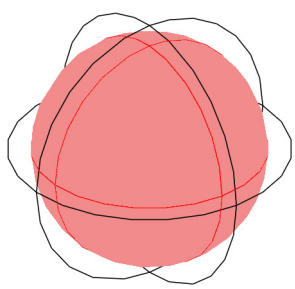

Figure 5-13: A spherical scaling domain stretches the coordinate system only in the radial direction relative to a specified centerpoint.

Manual Settings for Nonstandard Geometries

The automatic geometry analysis performed for each of the standard cases shown above may fail for certain geometry configurations. In particular, the analysis assumes that there are no inactive domains present on the outside of the scaling domain — that is, that the only domains adjacent to the scaling domain belong to the region of interest for the simulation. This is not always the case, for example, when you want to perform a simulation on a subset of a CAD geometry.

When the automatic geometry analysis fails, it is possible to instead specify the stretching directions in each domain manually. First, select the number of stretching directions: one, two, or three. Then, for each stretching direction, enter a scalar function of position, $d_i(\mathbf{x})$, defined such that it measures the distance from the inner scaling domain boundary in the given stretching direction. Also enter the maximum distance for each direction, $d_{\mathrm{Max},i}$ — effectively the thickness of the scaling domain in the given direction.

Stretching functions, $f_i(\xi)$, are evaluated as functions of the dimensionless distance $\xi_i = d_i(\mathbf{x})/d_{\mathrm{Max},i}$. The result is interpreted as a stretched distance in the given stretching direction. Finally, the change in distance is multiplied with the stretching direction unit vector, which is computed as the gradient of the corresponding distance function, to produce a stretching displacement relative to the original position. This is done for each stretching direction separately such that the scaled coordinate vector $\mathbf{x'}$ is

$$\mathbf{x}' = \mathbf{x} + \sum_i \lambda\left(f_i\left(\frac{d_i(\mathbf{x})}{d_{\mathrm{Max,i}}}\right) - d_i(\mathbf{x})\right)\nabla d_i(\mathbf{x})$$

where λ is a typical wavelength in PML domains, and equal to 1 in infinite elements.

Note on Availability

Infinite elements and perfectly matched layers are available only for some physics and when COMSOL Multiphysics is used together with certain add-on modules. If you have not added any physics that is compatible with infinite elements or perfectly matched layers under the available licenses, you cannot add such features to the model.

Further, after turning a domain into a PML or infinite element, that domain is not allowed in the active selection of physics interfaces and individual nodes that are not compatible with these special domain types. This means that the scaled domains are either not selectable at all or display as **Not applicable** in the selection list.

PML Implementation

PMLs apply a complex coordinate stretching in one, two, or three directions, depending on how the PML domain connects to the physical domain. In each direction, the same form of stretching is used, defined as a function of a dimensionless coordinate ξ, which varies from 0 to 1 over the PML layer. The function returns a new, complex and stretched, coordinate interpreted as relative to the typical wavelength for each simulation frequency. That is, the complex displacement for stretching in a single direction is $\Delta\mathbf{x} = \lambda f_i(\xi) - \Delta_w\xi$, where λ is a typical wavelength and Δ_w is the original width of the PML (as drawn in the geometry). A separate displacement is computed for each stretching direction and summed to make a total displacement.

In the PML nodes, you can choose between predefined *polynomial* and *rational* stretching functions, or select your own *user-defined* functions. The polynomial stretching function is defined as

$$f_p(\xi) = s\xi^p(1-i)$$

where p is a *curvature* parameter, and s is a *scaling factor*. The rational stretching function is defined as

$$f_r(\xi) = s\xi\left(\frac{1}{3p(1-\xi)+4} - \frac{i}{3p(1-\xi)}\right)$$

where p and s are again a curvature parameter and a scaling factor, respectively.

For user-defined stretching, you specify the real and imaginary parts of $f(\xi)$ as separate functions of one or two arguments. The first argument is interpreted as the dimensionless distance ξ and the second — optional — argument as the typical wavelength λ.

!	There is no check that the geometry of the region is correct, so it is important to draw a proper geometry and select the corresponding region type.

	For more information about the use of PMLs in acoustics simulations, see *Perfectly Matched Layers (PMLs)* in the *Acoustics Module User's Guide*.

INTERPRETING PML PARAMETERS

The predefined PML coordinate stretching functions are controlled by three parameters:

- The *typical wavelength* represents the longest wavelength of propagating waves in an infinite medium. It is normally provided by a physics interface. For nondispersive media, it is expected to be inversely proportional to the frequency and serve to make the PML perform similarly for all frequencies.

> In eigenfrequency studies, the typical wavelength parameter must not depend on the — unknown — frequency. When the typical wavelength is set to be obtained from a physics interface, it is therefore redefined to be equal to the PML width Δ_w instead. A user-defined typical wavelength applies as entered, but must not be a function of the frequency. It is often most convenient to draw and mesh the PML as if it had been part of the physical domain. To tune its effective thickness, use the scaling factor.

- The PML *scaling factor* multiplies the *typical wavelength* to produce an effective scaled width for the PML. For example, to retain perfect absorption for plane waves incident at an angle θ relative to the boundary normal, it is necessary to compensate for the longer wavelength seen by the PML in the stretching direction. In this case, 1/cos(θ) is a suitable scaling factor.

  Conversely, if resolving the field inside the PML proves too costly, it is possible to lower the scaling factor below its default value 1, to make better use of the available mesh elements. Note that this has a price in terms of less efficient absorption.
- The PML *curvature* parameter serves to relocate mesh resolution inside the PML. When there are components present which decay inside the PML much faster than the longest waves, the resolution must be increased in the zone closest to the boundary between PML and physical domain. Increasing the curvature parameter effectively moves available mesh elements toward the inner PML boundary. This is often necessary when the wave field contains a mix of different wavelengths or a mix between propagating and evanescent components.

> If you increase the curvature factor, you must normally still resolve the long propagating waves sufficiently, so an overall increase of the number of mesh elements across the PML is called for.

CHOOSING A STRETCHING TYPE

Which coordinate stretching type is most appropriate depends on the problem at hand. Consider the following when choosing between polynomial and rational stretching:

Polynomial The polynomial stretching strategy makes a minimum of assumptions about the wave field incident on the PML. Its finite and equal real and imaginary parts mean that propagating and evanescent waves with the same length scale are treated alike. The default scaling factor gives a PML with a maximum attenuation of about 109 dB for normal incidence and provided sufficient mesh resolution.

The polynomial stretching is generally applicable and most appropriate when there is a mix of different wave types in the model and you can afford at least 8 mesh elements across the PML. Also, compared to the rational stretching, it interferes less with the convergence of iterative linear solvers.

Rational The rational stretching is designed for propagating waves of mixed wavelengths and angles of incidence. The real part of the stretching scales the effective PML thickness to a quarter of a typical wavelength, while the imaginary part — responsible for the attenuation — is stretched out toward infinity. This means that provided sufficient mesh resolution, the PML absorbs any propagating wave perfectly.

User defined If none of the above stretching types are suitable, you can specify a user-defined stretching using functions that you add to the model as the real and imaginary parts of the stretching function.

In reality, the mesh resolution limits the effectiveness of the rationally stretched PMLs. For a single wavelength at normal incidence, 3 mesh elements across the PML normally give sufficient attenuation and accuracy. If the wave field contains also longer- or shorter-wavelength components, the mesh resolution must be increased. When other wave components are shorter than the supplied typical wavelength, increasing the curvature factor may be useful to make best use of the available resolution.

PMLs in Multiphysics

The coordinate stretching used in the PMLs is by default controlled by one of the physics interfaces in the model, which provides a *typical wavelength*. If each PML region contains a single active physics, and the PML regions are disjoint, you can set up separate PML nodes and choose different physics interfaces as wavelength source. If, instead, there are multiple physics active in the same PML domains or in adjacent domains — such as when an air-water interface extends into the PML — you must choose a single typical wavelength. Either choose a wavelength provided by one of the interfaces, or set a user-defined wavelength.

The way the stretching functions are defined, it usually makes the most sense to select the longest wavelength of propagating waves actually excited and propagating into the PML. Any shorter wavelengths must be accounted for by increasing the mesh resolution and curvature factor in the PML.

In the Acoustics Module, MEMS Module, and Structural Mechanics Module, you can control the typical wavelength passed from the physics interface to the PML, by changing the **Typical Wave Speed** property in the physics interface's **Settings** window. The default wave speed generally corresponds to a compressional or pressure wave, which is the fastest wave type and therefore of longest wavelength. In the RF Module, the default for the typical wavelength is $2\pi/k$, where k is the local wave number.

Perfectly Matched Layer

A **Perfectly Matched Layer** node ( ) applies a complex coordinate scaling to a layer of virtual domains surrounding the physical region of interest. When appropriately tuned, this layer absorbs all outgoing wave energy in frequency-domain problems, without any impedance mismatch causing spurious reflections at the boundary.

To add a Perfectly Matched Layer to any Component, click **Perfectly Matched Layer** in the **Definitions** toolbar, or right-click the **Definitions** node under the Component and choose **Perfectly Matched Layer**. If the nodes under the **Component** node are grouped by type, you can instead right-click **Artificial Domains** under **Definitions**.

SETTINGS

The **Label** is the default perfectly matched layer name.

The default **Name** (for the first perfectly matched layer in the model) is `pml`. The **Name** provides a namespace for variables created by the **Perfectly Matched Layer** node. For example, the scaled x coordinate can typically be accessed in equations and postprocessing as `pml1.x`. See the **Equation View** subnode for a complete list of available variables.

	To display the **Equation View** node under all nodes creating variables, click the **Show More Options** button ( ) and select **Equation View** in the **Show More Options** dialog box. See also Equation View.

DOMAIN SELECTION

Select a set of domains conforming to the selected geometry type. See Standard Geometry Configurations.

GEOMETRY

Select a **Type**: **Cartesian** (the default), **Spherical**, **Cylindrical**, or **User defined**.

- If **Spherical** is selected, enter the position of the center of the spherical geometry in the **Center coordinate** table. For axisymmetric models, only the *z* coordinate is required since the geometry must be centered on the axis.
- If **Cylindrical** is selected, enter the position of a point on the cylinder axis in the **Center coordinate** table. For 3D models, also enter a **Center axis direction** vector.
- If **User defined** is selected, first choose the **Number of stretching directions** appropriate for the geometrical configuration. Then for each stretching direction specify a **Distance function**, evaluating to the distance from the inner boundary of the PML measured in the stretching direction, and the **Thickness** of the PML in the same direction.

	Each of these types (except the user-defined type) requires certain geometrical configurations and not all of them are available for all space dimensions.

SCALING

Select a **Coordinate stretching type**: **Polynomial** (the default), **Rational**, or **User defined**. See PML Implementation for help on making a decision.

Select an option from the **Typical wavelength from** list: **Physics interface** (the default) or **User defined**. If **Physics interface** is selected, select one of the interfaces supporting PMLs from the **Physics** list. If **User defined** is selected, enter a value or expression for the **Typical wavelength**. The default is 1.

!	The **Physics interface** setting has no effect in Eigenfrequency studies. In that case, the typical wavelength is redefined to be equal to the PML width, as drawn in the geometry. The **User defined** option applies unaltered.

!	When using the PML in the **Pressure Acoustics, Transient** interface, then if you change the **Typical wavelength from** option to **User defined**, it is not the actual wavelength that should be entered but rather the speed of sound per Hertz. For example, if **User defined** is selected in a normal air domain, then enter `343[m/s]/1[Hz]`. The reason is that in the time domain the PML formulation is not related to wavelength but to speed of sound. Transient signals typically include many Fourier frequency components. For the implementation related to the time domain see the Theory for the Perfectly Matched Layers in the Time Domain section in the *Acoustic Module User's Guide*.

For the predefined **Polynomial** and **Rational** stretching types, enter a value or expression for the **PML scaling factor** and the **PML scaling curvature parameter** which can be used to tune the PMLs for wave fields with evanescent components or wavelengths deviating from the free-space wavelength of plane waves. See further PML Implementation. The defaults are 1 for both.

For the **User defined** stretching type, select **Real part of stretching function** and **Imaginary part of stretching function** from functions defined under **Global>Definitions** or under **Definitions** in a component, or leave the default value **None**, which for the real part is interpreted as $f(\xi) = \xi$ and for the imaginary part as $f(\xi) = 0$. Any function node defining a single function of one or two arguments is eligible for use as a stretching function. The first argument is

interpreted as a dimensionless distance, ξ, in the range 0 to 1, and the second argument — if present — as the typical wavelength.

	If you have the Acoustics Module, see these examples: • *Cylindrical Subwoofer*: Application Library path **Acoustics_Module/Tutorials,_Pressure_Acoustics/cylindrical_subwoofer** • *Acoustic Scattering off an Ellipsoid*: Application Library path **Acoustics_Module/Tutorials,_Pressure_Acoustics/acoustic_scattering**

	If you have the RF Module, see these examples: • 2D, cylindrical PML — *Radar Cross Section*: Application Library path **RF_Module/Scattering_and_RCS/radar_cross_section** • 3D, spherical PML with swept mesh —*RF Coil*: Application Library path **RF_Module/Passive_Devices/rf_coil**

Known Issues When Modeling Using PMLs

When modeling with PMLs be aware of the following:

USE OF ONE SINGLE PERFECTLY MATCHED LAYER NODE

A separate Perfectly Matched Layer node must be used for each simply connected PML region. That is, to use one and the same Perfectly Matched Layer node, all PML domains must be in contact with each other. Otherwise the PMLs do not work properly.

ELEMENT QUALITY

The coordinate scaling resulting from PMLs also yields an equivalent scaling of the mesh that can effectively result in a poor mesh element quality. (The element quality displayed by the mesh statistics does not account for this effect.) This typically happens when the geometrical thickness of the PML deviates much from one wavelength (local wavelength rather than free space wavelength). The poor element quality causes poor convergence for iterative solvers and makes the problem ill-conditioned in general.

For this reason, it is strongly recommended that you use swept meshing in the PML domains. The *vector element* formulations (the ones using two or more components of a vector field variable) in the RF Module are particularly sensitive to low element quality. The sweep direction should be selected the same as the direction of scaling. For Cartesian PMLs and regions with more than one direction of scaling, it is recommended to first sweep the mesh in the domains with only one direction of scaling, then sweep the domains with scaling in two directions, and finish by sweeping the mesh in the domains with PML scaling in all three directions.

COMPLICATED EXPRESSIONS

The expressions resulting from the stretching get quite complicated for spherical PMLs. This increases the time for the assembly stage in the solution process. After the assembly, the computation time and memory consumption is comparable to a problem without PMLs. The number of iterations for iterative solvers might increase if the PML regions have a coarse mesh.

ERRONEOUS RESULTS

PML regions deviating significantly from the typical configurations shown in the beginning of this section can cause the automatic calculation of the PML parameter to give erroneous results.

USE THE SAME MATERIAL PARAMETERS OR BOUNDARY CONDITIONS

The PML region is designed to model uniform regions extended toward infinity. Avoid using objects with different material parameters or boundary conditions that influence the solution inside a PML region.

Infinite Element Implementation

Infinite elements apply a semi-infinite coordinate stretching in one, two, or three directions, depending on how the infinite element domain connects to the physical domain. In each direction, the same form of stretching is used, defined as a function of a dimensionless coordinate ξ, which varies from 0 to 1 over the infinite element layer. The function returns a new, stretched, coordinate interpreted as a new position in the given direction. That is, the displacement for stretching in a single direction is $\Delta\mathbf{x} = f_i(\xi) - \Delta_w\xi$, where Δ_w is the original width of the infinite element domain (as drawn in the geometry). A separate displacement vector is computed for each stretching direction and summed to make a total displacement.

The default rational stretching function is defined as

$$f(\xi) = \frac{\xi}{\gamma - \xi}\Delta_p \tag{5-1}$$

where Δ_p is the, so called, pole distance and γ is a number larger than one, computed as

$$\gamma = \frac{\Delta_s + \Delta_p}{\Delta_s}$$

where Δ_s is the scaled thickness of the infinite element domain. The scaled thickness Δ_s and the pole distance Δ_p are user inputs.

For the user-defined stretching option, you specify $f(\xi)$ directly as a functions of the dimensionless distance ξ. This can, for example, be used for modeling a surrounding domain of finite extent, or for implementing a stretching function that better fits a dependent variable that decays with distance slower or faster than a monopole solution.

!	There is no check that the geometry of the region is correct, so it is important to draw a proper geometry and select the corresponding region type.

INTERPRETING INFINITE ELEMENT PARAMETERS

The default infinite element stretching has two user-defined parameters that let you control the thickness of the quasi-infinite region, as perceived by the physics interfaces, as well as how the stretching is distributed across the domain.

Physical width The scaled width of the infinite element domain, Δ_s, is by default set to `1e3*dGeomChar`, where the constant `dGeomChar` is a characteristic geometry dimension. The domain is therefore by default scaled to be very much larger than the original geometry, but not quite infinite in order to avoid numerical difficulties. In particular, the finite distance to the far-away boundary allows prescribing standard boundary conditions effectively at infinity.

Pole distance The coordinate stretching function, Equation 5-1, used in the infinite element domain contains a singularity when $\xi = \gamma$. Since $\gamma > 1$, this happens outside the infinite element domain. The pole distance, Δ_p, controls just how far away this singularity is located. If Δ_p is small compared to the scaled width, Δ_s, the coordinate stretching is very nonlinear, progressing from gentle close to the boundary with the physical domain to abrupt toward the quasi-infinite boundary. Conversely, if the pole distance is large compared to the scaled width, the stretching is constant across the domain.

The default pole distance is `dGeomChar`, which is small compared to the physical width. Therefore, the coordinate stretching by default exhibits a nearly $1/r$ behavior, which is suitable for making optimal use of mesh resolution when the dependent variable also behaves as $1/r$ for large r, where r is the distance from any sources or inhomogeneities.

Infinite Element Domain

An **Infinite Element Domain** node ( ) applies a real-valued coordinate scaling to a layer of virtual domains surrounding the physical region of interest. When the dependent variables vary slowly with radial distance from the center of the physical domain, the finite elements can be stretched in the radial direction such that boundary conditions on the outside of the infinite element layer are effectively applied at a very large distance from any region of interest.

To add an Infinite Element Domain to any Component, click **Infinite Element Domain** in the **Definitions** toolbar, or right-click the **Definitions** node under the Component and choose **Infinite Element Domain**. If the nodes under the **Component** node are grouped by type, you can instead right-click **Artificial Domains** under **Definitions**.

SETTINGS

The **Label** is the default infinite element domain name.

The default **Name** (for the first infinite element domain in the model) is `ie`. The **Name** provides a namespace for variables created by the **Infinite Element Domain** node. For example, the scaled x coordinate can typically be accessed in equations and postprocessing as `ie1.x`. See the **Equation View** subnode for a complete list of available variables.

	To display the **Equation View** node under all nodes creating variables, click the **Show More Options** button ( ) and select **Equation View** in the **Show More Options** dialog box. See also Equation View.

DOMAIN SELECTION

Select a set of domains conforming to the selected geometry type. See Standard Geometry Configurations.

GEOMETRY

Select a **Type**: **Cartesian** (the default), **Spherical**, **Cylindrical**, or **User defined**.

- If **Spherical** is selected, enter the position of the center of the spherical geometry in the **Center coordinate** table. For axisymmetric models, only the z coordinate is required since the geometry must be centered on the axis.
- If **Cylindrical** is selected, enter the position of a point on the cylinder axis in the **Center coordinate** table. For 3D models, also enter a **Center axis direction** vector.
- If **User defined** is selected, first choose the **Number of stretching directions** appropriate for the geometrical configuration. Then for each stretching direction specify a **Distance function**, evaluating to the distance from the inner boundary of the infinite element domain measured in the stretching direction, and the **Thickness** of the domain in the same direction.

	Each of these types (except the user-defined type) requires certain geometrical configurations and not all of them are available for all space dimensions.

SCALING

Select a **Coordinate stretching type**: **Rational** (the default) or **User defined**. See Infinite Element Implementation for a detailed explanation of the options.

For the default **Rational** stretching type, enter expressions for the **Physical width** (SI unit: m) and the **Pole distance** (SI unit: m). The default values, `1e3*dGeomChar` and `dGeomChar`, respectively, lead to an infinite element domain that is very large compared to the geometry dimensions and with a nearly singular $1/r$ stretching.

For the **User defined** stretching type, select a **Stretching function** from functions defined under **Global>Definitions** or under **Definitions** in a component, or leave the default value **None**, which is interpreted as $f(\xi) = \xi$. Any function node defining a single function of one arguments is eligible for use as a stretching function. The argument is interpreted as a dimensionless distance, ξ, in the range 0 to 1.

	If you have the AC/DC Module, see this example: *Modeling of a 3D Inductor*: Application Library path **ACDC_Module/Inductive_Devices_and_Coils/inductor_3d**

	If you have the Batteries & Fuel Cells Module, Corrosion Module, Electrochemistry Module, or Electrodeposition Module see this example: *Voltammetry at a Microdisk Electrode*: Application Library path **Batteries_and_Fuel_Cells_Module/General_Electrochemistry/microdisk_voltammetry**, **Corrosion_Module/General_Electrochemistry/microdisk_voltammetry**, **Electrochemistry_Module/Electroanalysis/microdisk_voltammetry**, **Electrodeposition_Module/Tutorials/microdisk_voltammetry**

Known Issues When Modeling Using Infinite Elements

Be aware of the following when modeling with infinite elements:

USE OF ONE SINGLE INFINITE ELEMENTS NODE

Use a separate Infinite Elements node for each isolated infinite element domain. That is, to use one and the same Infinite Elements node, all infinite element domains must be in contact with each other. Otherwise the infinite elements do not work properly.

ELEMENT QUALITY

The coordinate scaling resulting from infinite elements also yields an equivalent stretching or scaling of the mesh that effectively results in a poor element quality. (The element quality displayed by the mesh statistics does not account for this effect.)

The poor element quality causes poor or slow convergence for iterative solvers and makes the problem ill-conditioned in general. The *vector element* formulations (the ones using two or more components of a vector field variable) in the AC/DC Module are particularly sensitive to low element quality.

For this reason, it is strongly recommended to use swept meshing in the infinite element domains. Select the sweep direction to be the same as the direction of scaling. For Cartesian infinite elements in regions with more than one direction of scaling it is recommended to first sweep the mesh in the domains with only one direction of scaling, then sweep the domains with scaling in two directions, and finally sweep the mesh in the domains with infinite element scaling in all three directions.

COMPLICATED EXPRESSIONS

The expressions resulting from the stretching get quite complicated for spherical infinite elements in 3D. This increases the time for the assembly stage in the solution process. After the assembly, the computation time and memory consumption is comparable to a problem without infinite elements. The number of iterations for iterative solvers might increase if the infinite element regions have a coarse mesh.

ERRONEOUS RESULTS

Infinite element regions deviating significantly from the typical configurations shown in the beginning of this section can cause the automatic calculation of the infinite element parameter to give erroneous results.

USE THE SAME MATERIAL PARAMETERS OR BOUNDARY CONDITIONS

The infinite element region is designed to model uniform regions extended toward infinity. Avoid using objects with different material parameters or boundary conditions that influence the solution inside an infinite element region.

Absorbing Layer

An **Absorbing Layer** node ( )adds an absorbing layer to a time-explicit simulation. Absorbing layers are often referred to as sponge layers. The absorbing layers work by combining three techniques: a scaling system, filtering, and simple nonreflecting conditions. The Absorbing Layer node adds a special scaled system, where the scaling effectively slows down the propagating waves. Filtering attenuates and filters out high frequency components of the wave. In the Convected Wave Equation, Time Explicit interface (in the Acoustics Module), you can specify filter parameters in the **Filter Parameters in Absorbing Layers** section of its Settings window. See also Filter Parameters for the Wave Form PDE.

To add an Absorbing Layer go to any Component, then in the **Definitions** toolbar, click **Absorbing Layer**, or right-click the **Definitions** node under the Component and choose **Absorbing Layer**. If the nodes under the **Component** node are grouped by type, you can instead right-click **Artificial Domains** under **Definitions**.

SETTINGS

The **Label** is the default absorbing layer name.

The default **Name** (for the first absorbing layer in the model) is `ab`. The **Name** provides a namespace for variables created by the **Absorbing Layer** node. For example, the scaled x coordinate can typically be accessed in equations and postprocessing as `ab1.x`. See the **Equation View** subnode for a complete list of available variables.

	To display the **Equation View** node under all nodes creating variables, click the **Show More Options** button ( ) and select **Equation View** in the **Show More Options** dialog box. See also Equation View.

DOMAIN SELECTION

Select a set of domains conforming to the selected geometry type. See Standard Geometry Configurations.

GEOMETRY

Select a **Type**: **Cartesian** (the default), **Spherical**, **Cylindrical**, or **User defined**.

- If **Spherical** is selected, enter the position of the center of the spherical geometry in the **Center coordinate** table. For axisymmetric models, only the z coordinate is required since the geometry must be centered on the axis.
- If **Cylindrical** is selected, enter the position of a point on the cylinder axis in the **Center coordinate** table. For 3D models, also enter a **Center axis direction** vector.
- If **User defined** is selected, first choose the **Number of stretching directions** appropriate for the geometrical configuration. Then for each stretching direction specify a **Distance function**, evaluating to the distance from the inner boundary of the absorbing layer measured in the stretching direction, and the **Thickness** of the domain in the same direction.

SCALING

Enter expressions for the **Physical width** (SI unit: m) and the **Pole distance** (SI unit: m). The default values are `2.0*dGeomChar` and `0.25*dGeomChar`, respectively, For the layers to work optimally, the filter should not be too aggressive. Moreover, the scaled coordinates in the layer domain should also vary smoothly. To inspect the scaled system, you can plot the coordinate variables `x_absorb_ab1`, `y_absorb_ab1`, and `z_absorb_ab1` (for an Absorbing Layer node `ab1`). Using the absorbing layers with the three combined techniques will enable the reduction of spurious reflections by a factor between 100 and 1000 compared to the incident amplitude.

	If you have the Acoustics Module, see this example: *Gaussian Pulse in 2D Uniform Flow: Convected Wave Equation and Absorbing Layers*: Application Library path **Acoustics_Module/Tutorials,_Pressure_Acoustics/gaussian_pulse_absorbing_layers**

References for PMLs and Infinite Element Domains

1. O.C. Zienkiewicz, C. Emson, and P. Bettess, "A Novel Boundary Infinite Element", *Int. J. for Numerical Methods in Engineering*, vol. 19, no. 3, pp. 393–404, 1983.

2. J.P. Bérenger, "A Perfectly Matched Layer for the Absorption of Electromagnetic Waves", *J. Comput. Phys.*, vol. 114, pp. 185–200, 1994.

3. Jianming Jin, *The Finite Element Method in Electromagnetics*, 2nd ed., Wiley-IEEE Press, 2002.

Reduced-Order Modeling

Introduction

A *Reduced-Order Model* is a feature in a COMSOL Multiphysics model that encapsulates important aspects of the behavior of another model in a computationally efficient form. From the perspective of a COMSOL Multiphysics model that uses a reduced-order model, it is essentially a black box with a number of inputs and a number of outputs. Inside the box is an *online* model, which has been *trained* so as to reproduce the input-output behavior of a full, *unreduced*, COMSOL Multiphysics model and study step. Reduced-order models are normally created and trained by a **Model Reduction** study step (see Model Reduction) but can also be imported from a COMSOL Reduced-Order Model file (`*.mphrom`).

Outputs from a reduced-order model are made available to the model where it is used (the *caller*) in the form of variables or operators. These can be part of expressions and equations when computing the calling model, but can also be evaluated directly in postprocessing.

A reduced-order model can, for example, be used for:

- Representing a part of a more complex model (submodeling).
- Representing the behavior of a multiphysics model in a system simulation.
- Quickly computing the frequency response of a model for different frequencies and load cases without having to recompute the full model.
- Computing a model's response to random excitation with a given PSD (power spectral density)

When a model contains a reduced-order model, it is represented as a node under the **Reduced-Order Modeling** node ( ) under **Global Definitions**. See the following sections for information about the available reduced-order model types, concepts, and associated modeling tools:

- Reduced-Order Model Inputs
- Reduced-Order Model Outputs
- Modal Reduced-Order Models
- Global Reduced Model Inputs
- Frequency Domain, Modal Reduced-Order Model
- Time Dependent, Modal Reduced-Order Model
- Frequency Domain, AWE Reduced-Order Model
- Random Vibration
- Importing Reduced-Order Models
- The Reduced-Order Model Toolbar

Reduced-Order Model Inputs

There are two types of possible inputs to a reduced-order model: on one hand, fundamental parameters like the time (`t`) in a transient model and the frequency (`freq`) in a frequency-domain model, and, on the other hand, general parameter names that can be used to modify expressions and equations. Model reduction methods differ as to which fundamental parameters they can handle, as well as if and how they allow general parameters to be used.

During the training phase, the model reduction process must be able to evaluate the dependency of outputs on inputs. For fundamental parameters, this is built into the equation formulation itself. But general dependency evaluations can only be performed with respect to degrees of freedom in the model. Therefore, any quantity that

you want to use as a general input parameter to a reduced-order model must be temporarily redefined as a degree of freedom during the training phase. And it must then also evaluate to a constant training value, independent of time, frequency or other inputs.

At the same time, a general input parameter must behave like a normal user-defined variable when the full, unreduced, model study is computed or when it is used explicitly in a calling model. For example, it can be time- or frequency-dependent in that situation.

Reduced-order model inputs are special variables that have these desired properties: they are defined by an expression during normal computations, where they can be used exactly like any other user-defined variable. But they are internally redefined as degrees of freedom when necessary for training a Reduced-Order Model. The Model Reduction study step (see Model Reduction) allows only such predefined reduced-order model inputs as inputs to the training process.

For example, consider an input parameter `f` representing a time-varying force on a model. In the full, unreduced model, it is defined as some function of time `f(t)` that will be used if you compute a time-dependent study. This is good practice as a way to check correctness of the unreduced model. When you add a Model Reduction study to the full model in order to train a reduced-order model, it will have to linearize the behavior around some nominal value f_0. To do that, the Model Reduction study step will temporarily turn `f` in to a degree of freedom, with respect to which it can compute sensitivities. And it will initialize that degree of freedom to f_0.

In the reduced-order model created by the Model Reduction study step, you can specify the actual expression that will be used as input values when calling the online model. This can be any expression, say `g(t)`, that can be evaluated in the calling model, but it is by default set to equal the original input name in the unreduced model. When the calling model is the same as the unreduced model, which is the most common situation, this means that the force input to the reduced-order model in this example evaluates to `f(t)`, like in the unreduced model.

When using a reduced-order model you can specify actual values of the reduced-order model inputs in three different ways. You can:

- Modify the actual input expressions in the Reduced-Order Model node.
- Modify the definition of the reduced-order model input name; it does not have to be a special reduced-order model input variable in the calling model.
- Change the expression in the **Parameters** table in postprocessing features.

The last option lets you effectively recompute the outputs of the reduced-order model for different inputs interactively during postprocessing.

Reduced-Order Model Outputs

A reduced-order model makes its output available to the calling model in the form of variables and operators. You can define output variables in the Model Reduction study step before training the reduced-order model, specifying an output variable base name and a corresponding global expression valid in the unreduced model. Variables defined in this way become available as global variables in a calling model, but with a namespace prepended to indicate which reduced-order model instance they belong to. For example, an output variable defined as `g` in the Model Reduction study step will be `rom1.g` in the caller if the reduced-order model feature name is `rom1`.

	You can have multiple instances of the same reduced-order model, or multiple different reduced-order models created from the same Model Reduction study step, in the same caller. Therefore, all variables (for example, inputs and outputs) associated with a reduced-order model use the feature's **Name** as namespace to tell them apart.

Some types of reduced-order models define operators with fixed base names, but using the reduced-order model feature namespace. For example, reduced-order models that are capable of reconstructing the complete solution vector define `<rom>.eval(<expr>)` which evaluates the expression `<expr>` using the solution reconstructed for the current values of the reduced-order model's inputs.

Modal Reduced-Order Models

A ***modal*** reduced-order model represents a linearization of a full, unreduced, model by projecting it onto a basis consisting of eigenmodes to the full problem. See The Modal Solver Algorithm for the full theory. The reduced-order model internally stores projected matrices as well as input and output matrices, which together contain sufficient information for computing linear scalar output values when given values of the inputs. Optionally, a modal reduced-order model can also store the eigenvector basis itself together with mesh information enough to reconstruct a full solution, which is used for evaluating any nonlinear output expressions.

The internal modal matrices can be exported from the reduced-order model feature, and the entire set of modal matrices can be saved as a COMSOL Reduced-Order Model file (.mphrom). Note that export is only possible if all defined outputs are linear. When importing a modal reduced-order model, only the modal matrices are imported; no information about the modal basis is stored. Therefore, reconstruction of the full solution is not possible for an imported reduced-order model.

There are two types of modal reduced-order models:

- A Time Dependent, Modal Reduced-Order Model internally solves a linear time-dependent system of equations in modal degrees of freedom. There is one internal degree of freedom for each eigenvector in the modal basis. The output for given time depends on the input values at all previous times.
- A Frequency Domain, Modal Reduced-Order Model uses a time-harmonic ansatz and internally solves a linear system of equations in the modal degrees of freedom for each frequency where output is requested. The online model does not have any persistent internal state, making the output values effectively functions of the inputs evaluated at the current frequency.

PARAMETERS AND INPUTS

Modal reduced-order models accept the following inputs:

- A *fundamental parameter*, which is either *time* or *frequency*
- An arbitrary number of *global reduced-model inputs*
- A *load factor*

All modal reduced-order models require one fundamental parameter, which is either time or frequency, depending on the type of model. In most cases, the actual value will be set equal to the time or frequency of evaluation in the calling model, but you can change this behavior in the corresponding Reduced-Order Model feature. For example, you can use a Frequency Domain, Modal Reduced-Order Model in a time-dependent calling model by specifying a fixed frequency as input expression.

In addition to the fundamental parameter, a modal reduced-order model accepts an arbitrary number of global reduced-model inputs. These are expected to enter linearly in the right-hand side of the linearized unreduced model. In practice, this means that they multiply different loads or sources, depending on the type of physics. In a structural mechanics context, you might say that they each multiply a *load case*. When using the modal reduced-order model in a calling model, you can specify expressions individually for each such input, letting you control the magnitude of each load or source but not its spatial distribution.

The load factor effectively multiplies all loads or sources that are *not* multiplied by a global reduced-model input. In frequency domain modal reduced-order models, the load factor also multiplies the right-hand side of any inhomogeneous constraints.

OUTPUTS

A modal reduced-order model can provide three types of outputs:

- Global scalar *linear* functions of the reconstructed solution
- Global *nonlinear* functions of the reconstructed solution
- The reconstructed solution itself

Linear and nonlinear outputs are handled differently. Linear outputs are incorporated in an output matrix, which is internally multiplied with the modal solution. They can therefore be evaluated directly without access to the eigenvector basis and data structures necessary for evaluating a general expression. A modal reduced-order model defining only linear outputs can therefore be stored on disk in a compact form.

For nonlinear outputs, the modal reduced-order model stores the output expression. When the output value is required, the expression is evaluated on a solution that has been reconstructed using the eigenvector basis, which must therefore also be stored. But interpreting a general expression also requires access to a mesh and variable definitions that are compatible with the basis vectors. If there are nonlinear outputs present, the modal reduced-order model therefore in practice stores the entire eigenfrequency solution, including the model that generated it.

When the entire eigenfrequency solution is stored with the modal reduced-order model, it can be used to reconstruct the entire solution for any required input frequency or time. Using the `<rom>.eval()` operator, you can evaluate arbitrary expressions using the reconstructed solution. Reconstruction is always available if there are nonlinear outputs defined. But you can also explicitly require that reconstruction capability should be included when creating the reduced-order model.

MATRIX EXPORT

The projected matrices which are used internally by the modal reduced-order model can be exported using the COMSOL API, for example for use in an external systems simulation. They can also be inspected inside COMSOL Multiphysics using a System Matrix node in postprocessing and referring to the dataset which represents the internal modal reduced-order model data. Available matrices and vectors include the following types:

- Stiffness matrix
- Damping matrix
- Damping ratio matrix
- Mass matrix
- Input matrix
- Output matrix
- Input feedback matrix
- Load vector
- Output bias

The full lists of available matrices and vectors are displayed in the reduced-order model node in the user interface and can be retrieved using the API.

Global Reduced Model Inputs

Add a **Global Reduced Model Inputs** node ( ) under **Global Definitions** to declare global variables for use as controlling inputs to Reduced-Order Model nodes. You add it by right-clicking **Global Definitions** and choosing **Global Reduced Model Inputs** from the **Reduced-Order Modeling** submenu.

REDUCED MODEL INPUTS

Specify a **Control name** and **Expression** for each required input. There are two possibilities: either enter the name of an existing model parameter, or select a new name. Entering the name of an existing model parameter will redefine that parameter as a reduced model input with the online expression linked from the parameter's original definition in a Parameters node. In this case, the **Expression** column immediately displays the linked expression and is not editable. If you instead select a new name, you must also enter an online expression which will define the value of the input variable in all situations except during training of a reduced model (see Reduced-Order Model Inputs).

Frequency Domain, Modal Reduced-Order Model

A **Frequency Domain, Modal Reduced-Order Model** node ( ) contains settings for an online model using a frequency domain modal method. See Modal Reduced-Order Models.

Click **Export Reduced Model** ( ) to save the reduced-order model to file as COMSOL Reduced Model file (MPHROM-file). Note that export is only possible if all defined outputs are linear quantities.

The **Settings** window for a **Frequency Domain, Modal, Reduced-Order Mode**l node contains the following sections:

PARAMETERS

Here you specify the **Frequency** value to be used when evaluating outputs. It is by default set to `freq`, which means that the reduced-order model will be evaluated at the same frequency as the calling model in which it is used.

MODEL CONTROLS INPUTS

The list in this section contains the reduced-oder model input quantities that were set as active in the corresponding **Model Reduction** node's **Model Control Inputs** section when the reduced-order model was created. For each model control input in the **Variable** column, specify a corresponding **Expression** to be used when evaluating outputs from the reduced-order model. The default expression is the name of the corresponding reduced-order model input variable. The effect of this is that the reduced-order model will be evaluated for the same value of the input as is seen by the calling model in which it is used. This is usually the desired behavior.

OUTPUTS

This section provides an overview of output quantities that the reduced-order model makes available for evaluation, both during solution and in postprocessing. These outputs are defined in the corresponding **Model Reduction** node's **Outputs** section. The **Variable** column shows the variable names defined by the reduced-order model.

When **Use output dependent variables** is selected, the reduced-order model also declares the dependent variable names entered in the **Dependent variable** column. When the reduced-order model is part of another model, these dependent variables can be assigned the value of the corresponding output variable each time a solution is stored. This behavior is controlled by the **Store output dependent variables** setting in the **Physics and Variables Selection** section of each study step where the reduced-order model is used.

ONLINE SETTINGS

This section displays a list of dependent variable fields that this reduced-order model can reconstruct. When the reduced-order model is used in a calling model, it defines an operator `<rom_name>.eval(<expr>)`, where `<rom_name>` is the **Name** of the reduced-order model and `<expr>` is an arbitrary expression.

	Field reconstruction is not possible in a **Reduced Model** node that uses reduced-order model data saved in a COMSOL Reduced Model file and then imported. The original model data needed is then not available.

Use the **Load factor** to scale the constant part of the right-hand side of the frequency-domain model. This scaling in practice scales all loads, source terms, and constraint right-hand sides with the specified factor.

INFORMATION

This section contains information about the reduced-order model: Which study it was created from, which solution data that contains the reduced model data, the model reduction type, the unreduced study type, and some general information about the model reduction.

Under **Matrices**, all matrices that the reduced model solution includes are listed. The listed vectors and matrices can be accessed using the COMSOL API.

BUILD LOG

The build log contains output from the reduced-order model solution process, similar to other solver logs.

Time Dependent, Modal Reduced-Order Model

A **Time Dependent, Modal Reduced-Order Model** node ( ) contains settings for an online model using a time domain modal method. See Modal Reduced-Order Models.

Click **Export Reduced Model** ( ) to save the reduced-order model to file as COMSOL Reduced Model file (MPHROM-file). Note that export is only possible if all defined outputs are linear quantities.

The **Settings** window for a **Time Dependent, Modal, Reduced-Order Mode**l node contains the following sections:

PARAMETERS

Here you specify the **Time** value to be used when evaluating outputs. It is by default set to `t`, which means that the reduced-order model will be evaluated for the same time as in the calling model in which it is used.

MODEL CONTROLS INPUTS

The list in this section contains the reduced-oder model input quantities that were set as active in the corresponding **Model Reduction** node's **Model Control Inputs** section when the reduced-order model was created. For each model control input in the **Variable** column, specify a corresponding **Expression** to be used when evaluating outputs from the reduced-order model. The default expression is the name of the corresponding reduced-order model input variable. The effect of this setting is that the reduced-order model will be evaluated for the same value of the input as is seen by the calling model in which it is used. This is usually the desired behavior.

OUTPUTS

This section provides an overview of output quantities that the reduced-order model makes available for evaluation, both during solution and in postprocessing. These outputs are defined in the corresponding **Model Reduction** node's **Outputs** section. The **Variable** column shows the variable names defined by the reduced-order model.

When **Use output dependent variables** is selected, the reduced-order model also declares the dependent variable names entered in the **Dependent variable** column. When the reduced-order model is part of another model, these dependent variables can be assigned the value of the corresponding output variable each time a solution is stored. This behavior is controlled by the **Store output dependent variables** setting in the **Physics and Variables Selection** section of each study step where the reduced-order model is used.

ONLINE SETTINGS

This section displays a list of dependent variable fields which this reduced-order model can reconstruct. When the reduced-order model is used in a calling model, it defines an operator `<rom_name>.eval(<expr>)`, where `<rom_name>` is the **Name** of the reduced-order model and `<expr>` is an arbitrary expression.

	Field reconstruction is not possible in a **Reduced Model** node that uses reduced-order model data saved in a COMSOL Reduced Model file and then imported. The original model data needed is then not available.

Use the **Load factor** to scale the constant part of the right-hand side of the frequency-domain model. This in practice scales all loads and source terms with the specified factor.

Specify a **Relative tolerance** for the BDF time-stepping method used inside the online model.

INFORMATION

This section contains information about the reduced-order model: Which study it was created from, which solution data that contains the reduced model data, the model reduction type, the unreduced study type, and some general information about the model reduction.

Under **Matrices**, all matrices that the reduced model solution includes are listed. The listed vectors and matrices can be accessed using the COMSOL API.

BUILD LOG

The build log contains output from the reduced-order model solution process, similar to other solver logs.

Frequency Domain, AWE Reduced-Order Model

A **Frequency Domain, AWE Reduced-Order Model** node ( ) defines a reduced-order model using asymptotic waveform expansion (AWE) to represent a frequency response. See AWE Solver.

The **Settings** window for a **Frequency Domain, Modal, Reduced-Order Mode**l node contains the following sections:

PARAMETERS

Here you specify the **Frequency** value to be used when evaluating outputs. It is by default set to `freq`, which means that the reduced-order model will be evaluated at the same frequency as the calling model in which it is used.

OUTPUTS

This section provides an overview of output quantities which the reduced-order model makes available for evaluation, both during solution and in postprocessing. These outputs are defined in the corresponding **Model Reduction** node's **Outputs** section. The **Variable** column shows the variable names defined by the reduced-order model.

When **Use output dependent variables** is selected, the reduced-order model also declares the dependent variable names entered in the **Dependent variable** column. When the reduced-order model is part of another model, these dependent variables can be assigned the value of the corresponding output variable each time a solution is stored. This behavior is controlled by the **Store output dependent variables** setting in the **Physics and Variables Selection** section of each study step where the reduced-order model is used.

ONLINE SETTINGS

This section displays a list of dependent variable fields which this reduced-order model can reconstruct. When the reduced-order model is used in a calling model, it defines an operator `<rom_name>.eval(<expr>)`, where `<rom_name>` is the **Name** of the reduced-order model and `<expr>` is an arbitrary expression.

INFORMATION

This section contains information about the reduced-order model: Which study it was created from, which solution data that contains the reduced model data, the model reduction type, the unreduced study type, and some general information about the model reduction.

BUILD LOG

The build log contains output from the reduced-order model solution process, similar to other solver logs.

Random Vibration

A **Random Vibration** node ( ) defines a random vibration analysis based on a frequency response model, primarily for structural mechanics simulations. This feature makes it possible to postprocess the probability spectral density (PSD) of a Frequency Domain, Modal Reduced-Order Model's response to random loads described by their power spectra. The output is presented using two operators, `<rom_name>.psd(...)` and `<rom_name>.rms(...)`, where `<rom_name>` is the **Name** of the Random Vibration node. For details, see Performing a Random Vibration Analysis in the *Structural Mechanics Module User's Guide*.

The **Settings** window for a **Random Vibration** node contains the following sections:

FREQUENCY RESPONSE MODEL

From the **Frequency response model** list, choose an existing **Frequency Domain, Modal Reduced-Order Model** node representing the frequency-domain behavior of the structure.

POWER SPECTRUM

From the **Correlation type** list, choose a type of correlation: **Uncorrelated** (the default), **Fully correlated**, or **Cross-correlated**. If you choose **Cross-correlated**, a correlation matrix appears at the bottom of this section.

For each reduced-order model input used in the selected **Frequency response model**, and displayed in the **Control name** list, enter an input **Power spectral density** expression. Note that this expression is usually a function of the frequency, `freq`.

If the correlation type was set as **Cross-correlated**, fill in expressions for the off-diagonal elements of the cross-correlation between the reduced-order model inputs. These expressions are also typically frequency dependent.

Importing Reduced-Order Models

You can save reduced models to file as COMSOL Reduced Model files, which are variants of the normal COMSOL Model MPH-files but with a reduced model and the extension `.mphrom`. To import such COMSOL Reduced Model files, right-click the **Reduced-Order Modeling** node and choose **Reduced Models Import**. A **Select File** dialog box then appears, and you can browse and choose a **COMSOL Reduced Model (*.mphrom)** model from the file system.

The Reduced-Order Model Toolbar

The following buttons may be available at the top of a Reduced-Order Model's **Settings** window (or right-click the reduced-order model node and choose them from the **Reduced Model** context submenu):

Click **Update Reduced Model Data** ( ) (or press F5) to update the reduced model data to take the current model state into account. This step is essentially equivalent to recomputing the Model Reduction study that created the Reduced-Order Model

	It is only possible to update the reduced model data if the data has not been cleared and when the generating study has not been removed.

Choose **Export Reduced Model** ( ) to export the reduced-order model to a COMSOL Reduced Model file (*.mphrom) that you specify in the **Export** dialog box.

	It is only possible to export linear models with data that has not been cleared.

Click **Reset to Default** ( ) to reset the reduced model properties to the default values (that is, the last values produced from a **Model Reduction** node or imported). Clicking this button is useful if you have made edits for the settings that you do not want to keep. When updating the reduced model using the new settings, the updated values become the ones used as the original values for the reset.

6

Visualization and Selection Tools

COMSOL Multiphysics® provides a number of tools to visualize and control how you view models and select parts of the model geometry in the Graphics window and the Settings windows.

In this chapter:

- Working with Geometric Entities
- Creating Named Selections
- User-Defined Views

Working with Geometric Entities

The topics in this section provide you with an introduction to the following:

- About Geometric Entities defines the types of geometric entities in COMSOL, including information about adjacent and overlapping objects in the Graphics window.
- The Graphics Window is the environment where the geometry is visualized and selected.
- About Selecting Geometric Entities is an important section that helps you to understand how to highlight, select, or hide any part of the geometry using buttons, mouse clicks, keyboard shortcuts, or combinations of actions. Many physics feature node Settings windows have a common selection section, The Geometric Entity Selection Sections, which also has several useful buttons available on the Settings Window Toolbar.
- The Selection List Window is a tool to help you to list all the specific geometric entities in the model and to locate and select, for example, small parts of complex geometries.
- About Highlighted Geometric Entities in the Graphics Window describes the color scheme used to help you visually determine what geometric entities are included or excluded in a model. This makes it easy to add or remove domains, boundaries, edges, or points to the model. Also see
- The section Selecting and Clearing Selection of Geometric Entities has a table with a list of the different ways to select geometry using a variety of windows, mouse buttons, clicks, and keyboard shortcuts.
- The Graphics Window Toolbar Buttons and Navigation section includes a table with the different icons that display in the Model Builder (based on space dimension). The rest of the section describes the tasks related to the toolbar: Zooming In and Out in the Graphics Window, Changing Views in the Graphics Window, Moving Around and Rotating a 3D Geometry, Lighting, Transparency, Projection, and Wireframe Rendering, and Hiding and Showing Geometric Entities.
- The section Using A 3D Mouse from 3Dconnexion describes how to activate and use a SpaceMouse® from 3Dconnexion®.

About Geometric Entities

Conceptually, a geometry is a collection of bounded *geometric entities*. Those entities are volumes, surfaces, curves, or points. Geometric entities include *domains*, *boundaries*, *edges* (3D only), and *points*. For example, a 3D cube consists of one domain with six boundaries. The six boundaries have 12 edges and the edges connect at eight points (see Figure 6-1). This enables visualization of a cube by displaying one or more of these four types. For instance, you can create a wireframe plot by rendering only the cube's edges.

Geometric entities of the maximum dimension are called *domains*, while those of the next highest dimension are called *boundaries*. The boundaries are sometimes referred to as *faces* in 3D and *edges* in 2D. The *vertices* are also called *points*.

Table 6-1 summarizes the terms used in COMSOL Multiphysics.

TABLE 6-1: NAMES OF GEOMETRIC ENTITIES IN DIFFERENT SPACE DIMENSIONS

ENTITY DIMENSION	NAME IN 3D	NAME IN 2D	NAME IN 1D	NAME IN 0D
3D	domain			
2D	boundary	domain		
1D	edge	boundary	domain	
0D	vertex	vertex	boundary	domain

These rules apply to domains:

- The (interiors of the) domains are disjointed. However, this is only strictly true if the finalization method is to form a union. When it is to form an assembly, domains can overlap (though that is normally considered a modeling error).
- Every geometric entity is bounded by entities of smaller dimension. In particular, a domain (in 3D, 2D, or 1D) is bounded by boundaries, edges (in 3D), and vertices (in 3D and 2D). A boundary (in 3D or 2D) is bounded by edges (in 3D) and vertices. An edge is bounded by vertices.

ADJACENT, OVERLAPPING, AND HIDDEN GEOMETRIC ENTITIES

Geometric entities are *adjacent* if they connect directly to each other within a geometry object. Hence all boundaries, edges, and points on the cube are adjacent to the domain. An edge on the cube is adjacent to two boundaries and two points.

When you click a 3D geometry that consists of several objects, geometric entities of the same type might overlap and hide each other at the point where you click. *Overlapping* geometric entities, such as interior boundaries, are highlighted and selected starting with the closest geometric entity and ending with the entity the farthest away. Use the scroll wheel (mouse wheel) to move the highlighting from the closest overlapping entity forward and back by rolling the wheel forward and backward (if you use COMSOL Multiphysics on a computer with a touchpad instead of a mouse, use its equivalent to the wheel; for example, moving two adjoining fingers up or down the touchpad). Then click to select the highlighted entity. If you can move the mouse wheel in small distinct increments, each such increment moves the selection to the next or previous entity that you can reach. Alternatively, use the plus key (+) and minus key (-) or the up arrow or down arrow keys to highlight the next or previous entity, respectively (for those keys to work, the focus must be in the Graphics window).

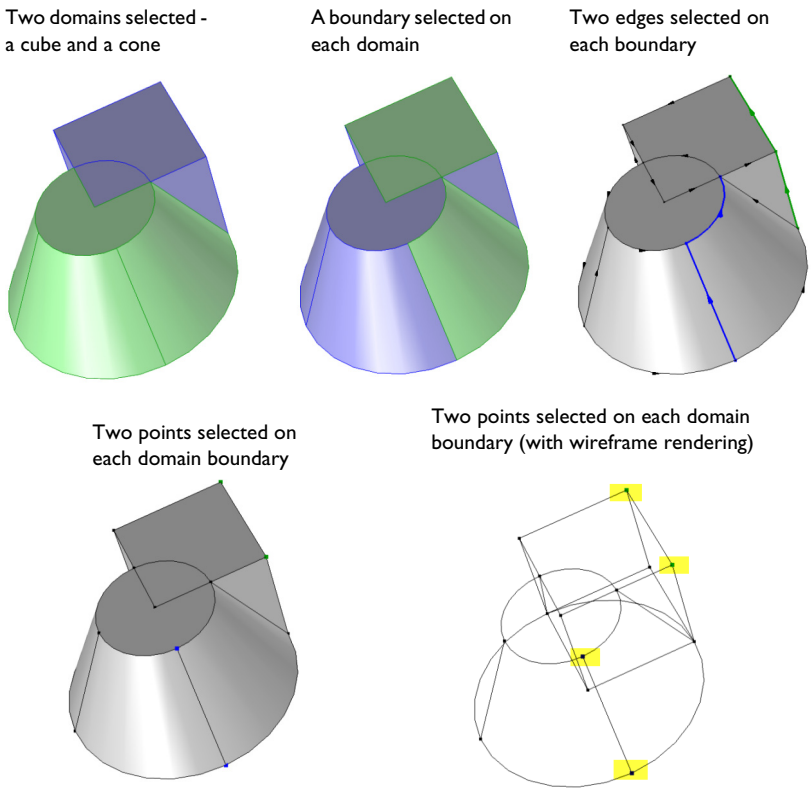

Figure 6-1: A 3D geometry comprises domains, boundaries, edges, and points.

- The Graphics Window
- About Selecting Geometric Entities
- About Highlighted Geometric Entities in the Graphics Window

The Graphics Window

The **Graphics** window (Figure 6-2) is a graphical view of the geometry, mesh, and results of the model. The window has useful tools for changing the view and selecting multiple entities — geometry objects when creating the geometry as well as domains, boundaries, edges, and points to define the physics features or to select geometric entities for fine-tuning the mesh or evaluating quantities in a certain part of the model, for example.

The toolbar at the top of the Graphics window has a set of tools for changing the visualization (for example, to zoom in or out or to add transparency) and for making selections. The available tools are dynamic and change based on the space dimension and what you are viewing in the graphics window at the time.

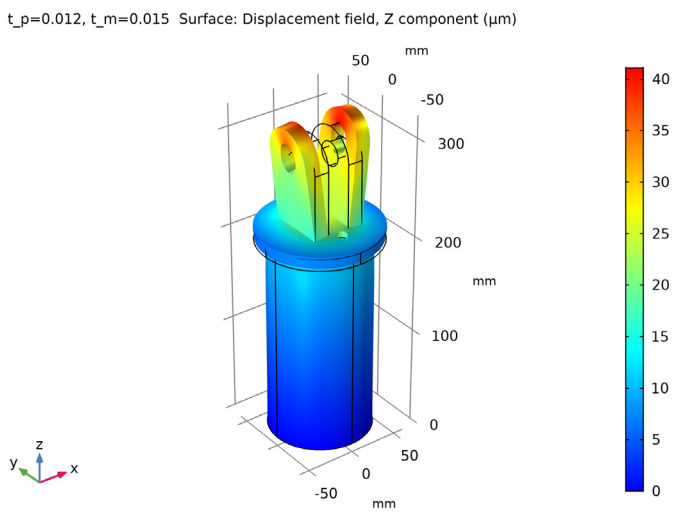

Figure 6-2: The Graphics window displaying a Surface plot for the Diagonal Mounting Detail of a Communication Mast model. This image displays for Windows users. The macOS and Linux Graphics window looks slightly different but functions the same and has the same toolbar.

ABOUT GRAPHICS RENDERING

For the graphics rendering, COMSOL uses OpenGL® rendering by default. It is also possible to use DirectX® rendering (Windows® only) or software rendering. Software rendering may be necessary in some cases, such as running COMSOL via a remote connection. You can change the type of rendering from the **Rendering** list on the **Graphics and Plot Windows** page in the **Preferences** dialog box.

- Capturing and Copying Screenshots
- About Geometric Entities
- The Graphics Window Toolbar Buttons and Navigation
- Creating Named Selections
- Physics Symbols

Basic Selection Concepts

The following basic selection concepts are useful for picking geometric entities where you want to apply physics, boundary conditions, or other parts of the model:

- To pick a geometric entity in the **Graphics** window and add it to the current node's selection list, simply click it. The geometric entity then appears in the selection list. Click again to deselect.
- You can right-click in the **Graphics** window to add a new selection so that you can preselect some geometric entities and then right-click those selected entities and add applicable physics nodes (for a physics that is selected in the model tree).
- You can also use the **Selection List** window to pick geometric entities, which you then add to the current selection by right-clicking and selecting **Add to Selection** or clicking the corresponding toolbar button (✚ . You can select multiple entities from the selection lists using Ctrl-click or Shift-click.
- It is good practice to add selection nodes with a selection of geometric entities that you can give a descriptive name and that contains geometric entities that represent a specific part of the geometry (a ground plane or an outlet, for example). You can then choose that selection node as a predefined selection from the **Selection** lists in the physics nodes, for example.
- For adding physics nodes from the toolbars, it can be useful to use a *preselection* by setting the **Activate Selection** button to off in the current **Settings** window. You can then select geometric entities and click the toolbar button for the physics nodes that you want to add. That physics node, when added, then gets the selection that you have preselected.

About Highlighted Geometric Entities in the Graphics Window

The **Graphics** window in the COMSOL Desktop highlights geometric entities at different stages of selection. A geometric entity is highlighted in red, blue, green, yellow, or with no highlight (gray) to indicate its status.

	Another visual cue to help you work in the Graphics window is that the geometry can have thicker edges (with OpenGL and Software rendering only, not DirectX), or larger points to highlight the different geometric entities selected. With the default graphics preference, to optimize for quality (for graphics cards that support it), highlighted geometric entities appear with a "glowing edge". If required, change the default from The Preferences Dialog Box under **Graphics and Plot Windows>Visualization**.

When assigning geometric entities to a node and you hover over that entity in the Graphics window, click once to add it to a selection list. See Figure 6-5 for an example. If you select the **Require click in Graphics window to activate hovering** check box under **Selections** on the **Graphics and Plot Windows** page in the **Preferences** dialog box, then you must first click once in the Graphics window before you can hover and click to select. See also Selection Colors below.

BLUE

For geometric entities added to a selection. A geometric entity highlighted in blue is included in the list of selected entities for the specific node. See Figure 6-4 for an example.

RED

Hovering over or selecting unselected geometric entities. When you hover over a geometric entity that has not yet been added to a selection, or if you select such a geometric entity in The Selection List Window, it is highlighted in red to help you locate it on the Graphics window. See Figure 6-4 and Figure 6-5 for examples.

	An entity highlighted in red is not yet added as a selection. Either click it in the **Graphics** window, or right-click the entity in the list or click the **Add to Selection** button in the **Selection List** window. The entity is then highlighted in blue to indicated that it has been added to the selection.

GREEN

Hovering over or selecting selected geometric entities. When you hover over a geometric entity that has already been added to a selection, or if you select such a geometric entity in the **Selection List** window (indicated by **(selected)** next to the entity number), it displays in green to indicate that it is included in the selection list. See Figure 6-4 for an example.

GRAY (NO HIGHLIGHT)

If the geometric entity is gray (that is, not highlighted), it means it is not selected or included for that node and geometric entity level. See Figure 6-5 for an example.

YELLOW

Next to the **Settings** window's selection list, there is an **Activate Selection** button to toggle between turning on and off selections for that feature node's selection list; that is, making the selections active for that selection list.

When the button is turned off, the selection mode is a *preselection* that is used for a selection that you add to the model by right-clicking in the **Graphics** window (see Right-Clicking to Select Geometric Entities and Add Physics Features) or from the toolbar, and the selection for the current node in the model tree is highlighted in yellow in the **Graphics** window. See Figure 6-3.

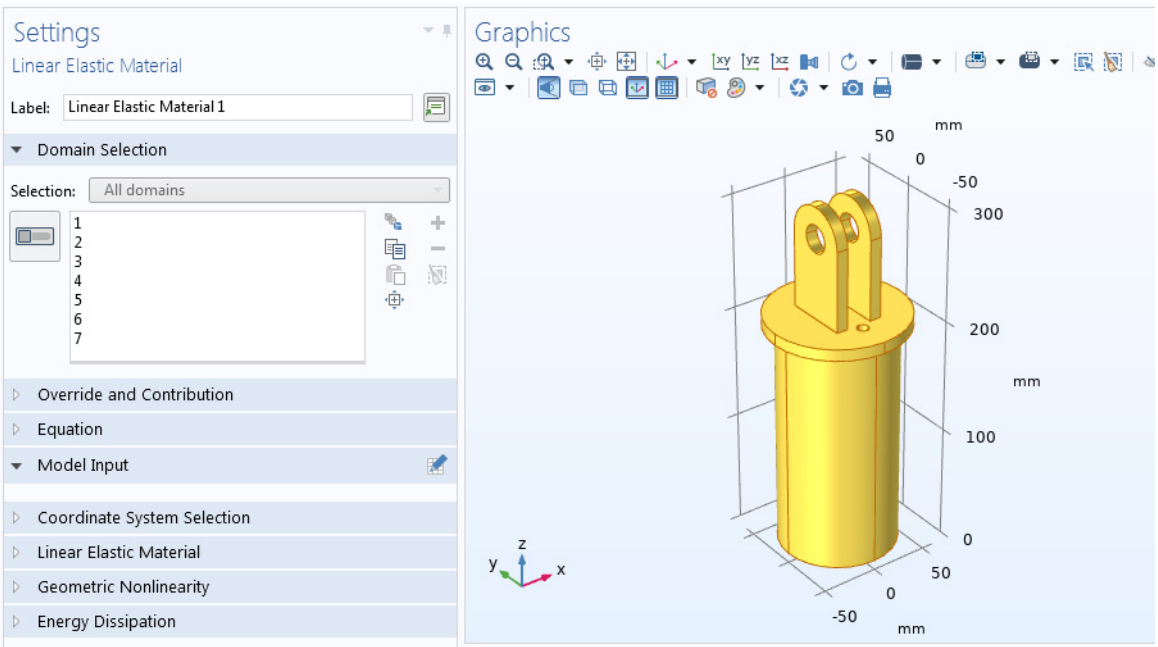

Figure 6-3: When the Activate Selection button is turned off, the selection for the current node is highlighted in yellow.

Hover over an entity in the Graphics window. When the selection is active, add or subtract it from the selection list (see Figure 6-6) by observing how the colors cycle on and off:

COLOR WHEN HOVERED OVER	CURRENT STATUS	NEW COLOR WHEN CLICKED	NEW STATUS WHEN CLICKED
Green	Included as a selection for the node.	Gray	Not included as a selection for the node.
Red	Not included as a selection for the node.	Blue	Included as a selection for the node.

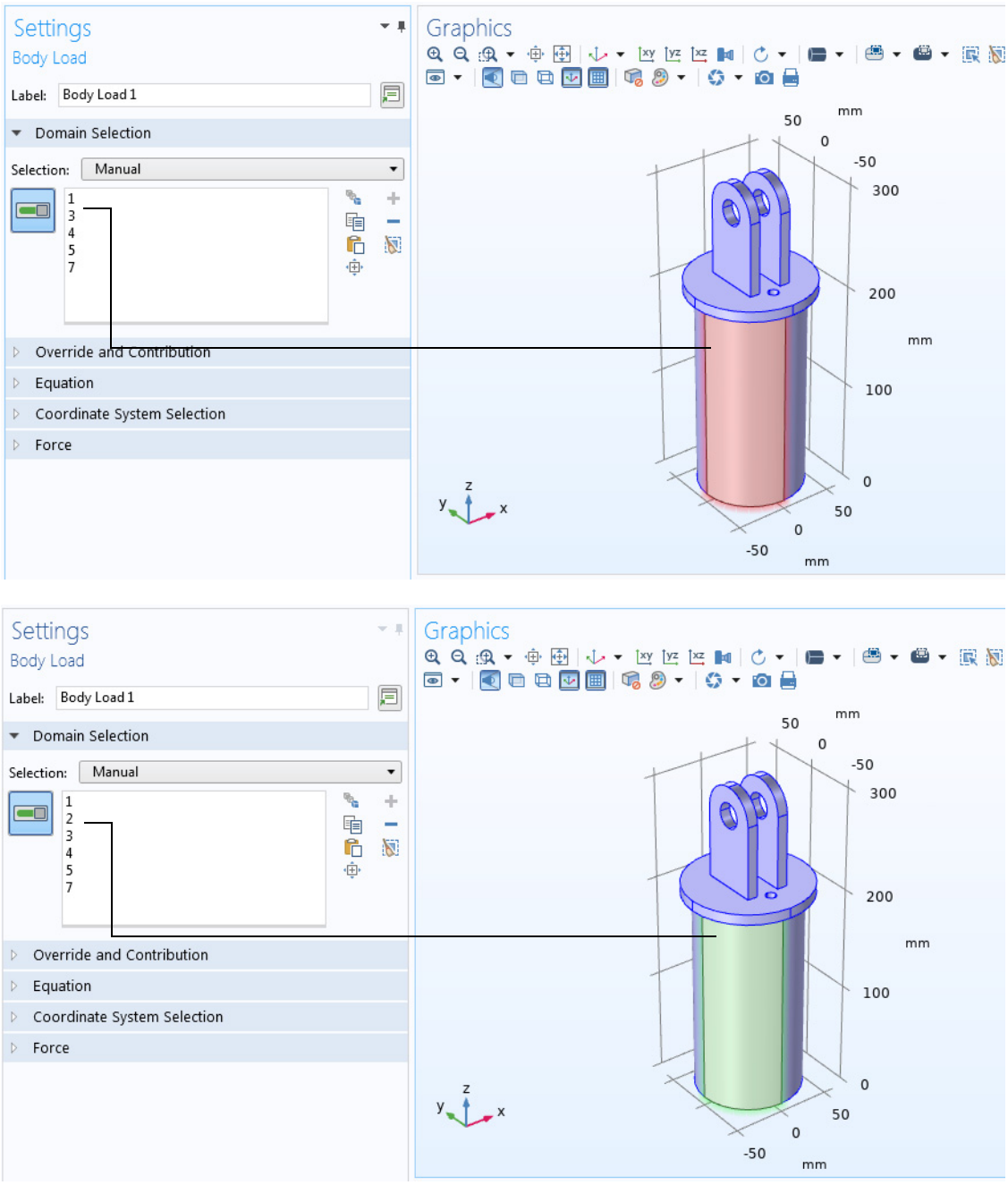

Figure 6-4: Domain 2 is removed from the Selection on the Settings window for Linear Elastic Material. When you hover over it, it is highlighted in red in the Graphics window to indicate where it is on the geometry (top image). Click to add

Domain 2 back to the selection, and Hover over a geometric entity in the Graphics window and it displays in green (bottom image). This example uses the Diagonal Mounting Detail of a Communication Mast model.

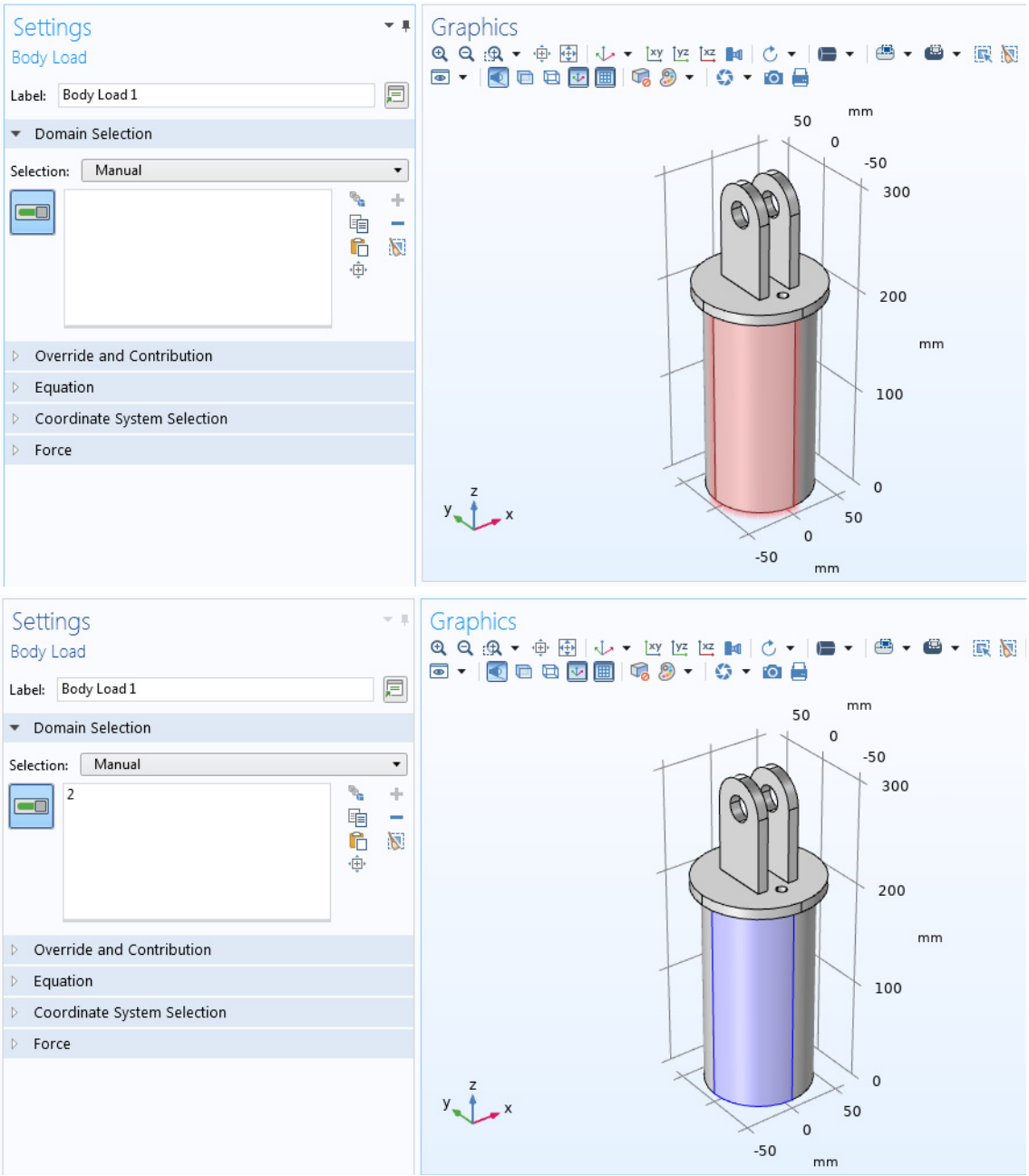

Figure 6-5: You want to add a domain to the Body Load node to make the load act on that domain. When you hover over a geometric entity in the Graphics window it displays in red to indicate it has not been added to the selection list (top). Click the domain to add it to the selection list on the Settings window and it displays in blue to indicate it has successfully been added (bottom). In both images, gray-colored domains are not selected or included.

USING SELECTION COLORS

Using selection colors in 2D and 3D models can make it easier to distinguish between selections of geometry objects and geometric entities. You can add a selection color to all selection nodes that you add from the **Selections** menu when right-clicking a **Definitions** node (or from the **Definitions** toolbar) In their **Settings** window, you can choose a color that represents that selection from the **Color** list. You can also assign colors using a **Color** list when you select the **Resulting objects selection** in the **Settings** window for most geometric primitives and geometry operations in geometry sequences.

From the color palette that opens you can choose **None** (the default, for no color); choose a color from the list of theme colors; or define and add custom colors that you can choose from by clicking **Define custom colors**, define a new custom color, and then click **Add to custom colors**. You specify a color theme in the **Preferences** dialog box on the **Graphics and Plot Windows** page. You can also specify it in the root node's **Settings** window. The color themes contains a set of colors that are chosen to form a suitable theme.

When you change the color theme, the colors chosen from the previous color theme change to the colors for the new color theme at the same positions in the list of theme colors.

COLOR APPEARANCE AND PRECEDENCE

Colors defined in the geometry sequence are displayed when viewing the geometry sequence. They are also displayed for the finalized geometry (for example, when the working with the mesh and physics) but only if that selection has the **Show in physics** option selected. Colors for selections and materials are not displayed in the geometry sequence.

The selection colors, the colors for selection highlighting, and colors for materials cannot appear at the same time. The following precedence rules control which color to display:

- Selection-related colors always have precedence.
- Selection-feature colors have precedence over geometry colors.
- If multiple selection features define a color for the same entity, the precedence order is as follows:
  - **a** Boundary color
  - **b** Domain color
  - **c** Object color
- If several selections define a color for the same entity, latter features in the list override former.
- Material colors have precedence over selection-feature colors (but material colors are not enabled by default).

By clicking the **Suppress Selection Highlight** button ( ) you can temporarily disable the selection highlight colors in the Graphics window. The state is reset automatically when you, for example, switch node in the **Model Builder**.

CONTROLLING THE SELECTION COLORS

From the **Colors** menus ( ) on the Definitions and Geometry toolbar you can choose the following actions for selection colors in definitions nodes and in geometry nodes, respectively:

- Choose **Color Selections** ( ) to color all selections using colors from the current color theme.
- Choose **Reset Colors from Theme** ( ) to reset all colors to those from the current color theme.
- Choose **Remove Selection Colors** ( ) to remove all selection colors so that they are set to **None**.

These settings are also available in a **Group** node that you have created and that contains a number of selection nodes, for example.

On the **Graphics** window toolbar, you can choose **Show Selection Colors** and **Show Material Colors and Texture** from the **Colors** menu ( ) to control the display of selection colors and material color and texture. Both of them can be selected at the same time. The same settings are also available in the **Colors** section of the **View** nodes' **Settings** window.

About Selecting Geometric Entities

Throughout COMSOL Multiphysics there are many lists of selected geometric entities, all based on the same principle — pick domains, boundaries, edges, or points and use methods to add or remove these geometric entities to create *selections* that define, for example, the parts of the geometry where a material or boundary condition is active. Such lists appear in **Settings** windows for defining equations and material properties, boundary conditions, sources, mesh features, and other parts of the model's design, and in the Variables node (a=) definitions for variables that are not defined in the entire model.

All levels of geometry can be treated individually. You can add and remove 3D geometric entities (domains, boundaries, edges, or points) to selection lists in different ways, including buttons in the **Graphics** toolbar (The Graphics Window Toolbar Buttons and Navigation), using The Selection List Window, clicking directly on the geometry, or clicking buttons in the **Settings** window. You can also select entities in the list to then remove them from the selection, for example. Ctrl+A selects all entities in the list. Table 6-2 lists the buttons that display on every **Settings** window with a geometric entity selection list as displayed in Figure 6-6.

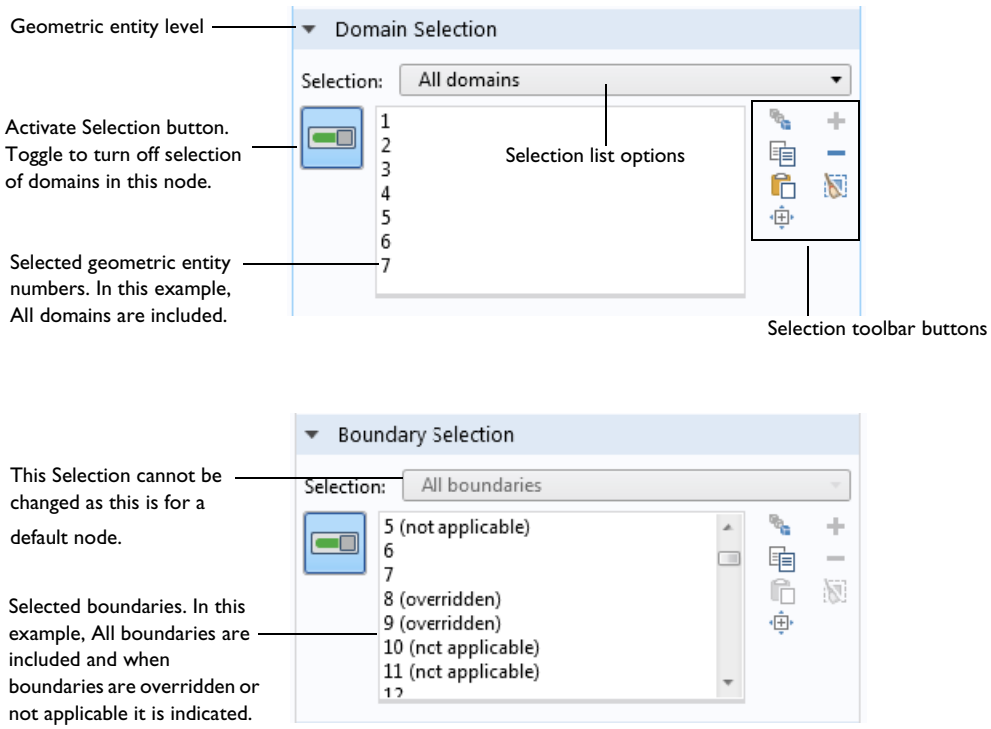

Figure 6-6: The selection list and toolbar on a physics node Settings window. The geometric entity level for the top Settings window is domains. The bottom Settings window is for a default boundary condition node where the selection cannot be changed, although a boundary can be overridden.

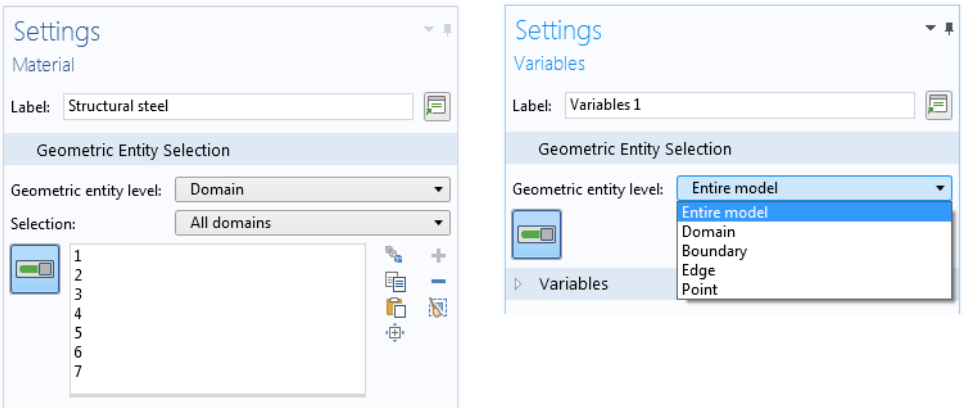

Figure 6-7: The Geometric entity level selection list and toolbar on a Settings window for Material (left) and the Settings window for Variables (right).

In The Graphics Window, the geometric entities are color highlighted as you make the selections, and you can lock the selections by turning off the active selection (at most one selection can be active at a time) or select **Disable Mouse Selection** (in 3D) in the **Graphics** window toolbar.

THE GEOMETRIC ENTITY SELECTION SECTIONS

The name of the section where the list of selected geometric entities is managed depends on the geometric entity level. For example, Figure 6-6 displays a **Domain Selection** section.

Every geometric entity selection section also has an **Active** button to toggle between turning on or off selections for that node.

For physics nodes that are default nodes (see Physics Interface Default Nodes) the selection defaults to all geometric entities on the applicable level (all domains or all boundaries, for example, in Figure 6-6), and the **Selection** list is not active. You can add other nodes that override the default nodes for some or all entities. Those entities are then marked **(overridden)** in the selection list for the default node.

- **Geometric Entity Selection**: For Materials and Variables nodes, where you first select the level (domain, boundary, and so on), from a **Geometric entity level** list. See Figure 6-7 for an example using the "Diagonal Mounting Detail of a Communication Mast" model.
- **Domain Selection**: For nodes that define, for example, material models, sources, and body loads in domains. See Figure 6-6 for an example.
- **Boundary Selection**: For nodes that define, for example, boundary conditions.
- **Edge Selection**: For nodes that define, for example, conditions and forces on edges. This is applicable to 3D models only.
- **Point Selection**: For nodes that define, for example, point sources and point loads.

From the **Selection** list you can choose one of the following options:

- **Manual** (the default): Select the geometric entities directly in the **Graphics** window, using The Selection List Window, or using the **Paste Selection** button. See below for more information about those selection methods.

	If you start by setting the **Geometric entity level** to **Domain**, and then select **All domains**, the **Selection** list displays all domains. If you make any changes to this list (for example, remove a domain) the **Selection** list reverts to **Manual**.

- **All domains**, **All boundaries**, **All edges**, **All points**: Depending on the geometric entity level, you can choose one of these options to select all entities. See Figure 6-6 for example.
- Defined named selections: Selection nodes added in the geometry sequence or under **Definitions** (as well as selections created from Boolean operations, for example) are available in the **Selection** lists for nodes that define model properties for the same geometric entity level. You can rename such selection nodes to better reflect what the selected entities represent. A named selection can consist of, for example, the domains where a volume force acts, the boundaries where an inflow occurs, or points that are grounded. Named selections are useful for reusing selections in a model component and to clearly indicate what parts of geometry that the selected entities include or represent. See Creating Named Selections.

In the lists of selected entities, **(overridden)** and **(not applicable)** can display next to the label (the number) of a selected entity. See Figure 6-6 and Physics Node Status for more information about these status indicators. There is also an **Override and Contribution** section in all physics nodes. It provides an overview of how the physics nodes and their selections interact. See Physics Exclusive and Contributing Node Types.

Pair Selection

If the geometry is an assembly you have access to specific pair conditions (typically on boundaries) that you choose from a **Pairs** submenu on the main physics nodes' context menus. In the **Settings** window for such pair nodes, a **Pair Selection** section contains a list (initially empty) of the selected pairs (typically identity pairs). Select the pairs where you want to include by clicking the **Add** button (+) and choose the pairs to add from the list in the **Add** dialog box that opens; then click **OK**. The **Boundary Selection** section (or another standard selection section) is then not possible to modify and shows the entity numbers for the boundaries, for example, that the selected pairs include. See Identity and Contact Pairs.

	See Table 6-3 for the many ways to select geometric entities using toolbar buttons, mouse click options, page settings, and keyboard shortcuts.

RIGHT-CLICKING TO SELECT GEOMETRIC ENTITIES AND ADD PHYSICS FEATURES

You can right-click anywhere in the **Graphics** window to define a preselection of some geometric entities and the add some physics feature with that selection. On the context menu, when a physics interface node is selected in the model tree, choose **New Domain Selection**, **New Boundary Selection**, **New Edge Selection**, or **New Point Selection**,

depending on the domain level that you want to make a selection for (not all levels are available for all space dimensions).

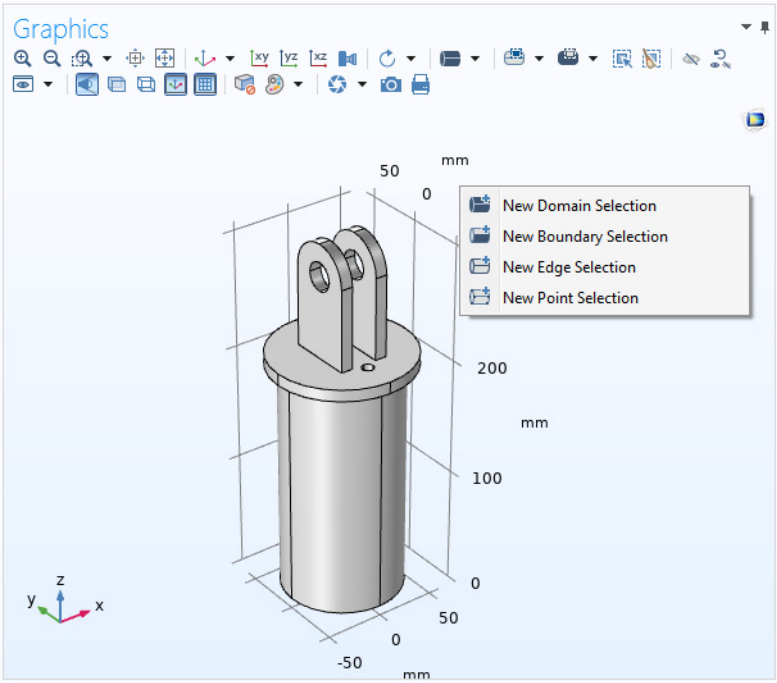

Figure 6-8: Right-click in the Graphics window to create a new selection for some physics.

For the geometry in the figure above, which is taken from the *Stiffness Analysis of a Communication Mast's Diagonal Mounting* model in the COMSOL Multiphysics Application Library, say that you want to add a boundary load to the four bottom boundaries (faces). Then with a Solid Mechanics interface node selected, add a new boundary selection for those boundaries and then right-click and select **Boundary Load** from the context menu.

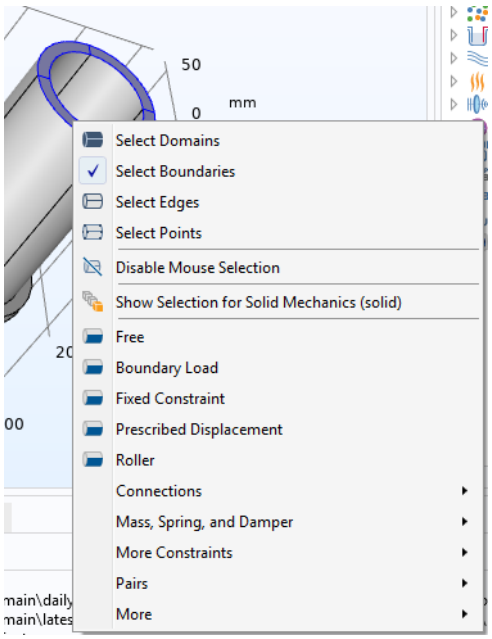

Figure 6-9: The context menu for adding a physics feature to the preselection (for Solid Mechanics).

A **Boundary Load** node is then added to the Solid Mechanics interface in the model tree with its selection being the four bottom boundaries. You are still in the preselection mode and can make a new boundary selection, for example. The added selection appears in yellow. If you want to add more boundaries to this Boundary Load mode, select them, and then right-click and choose **Add to Boundary Selection for Boundary Load 2** (for example).

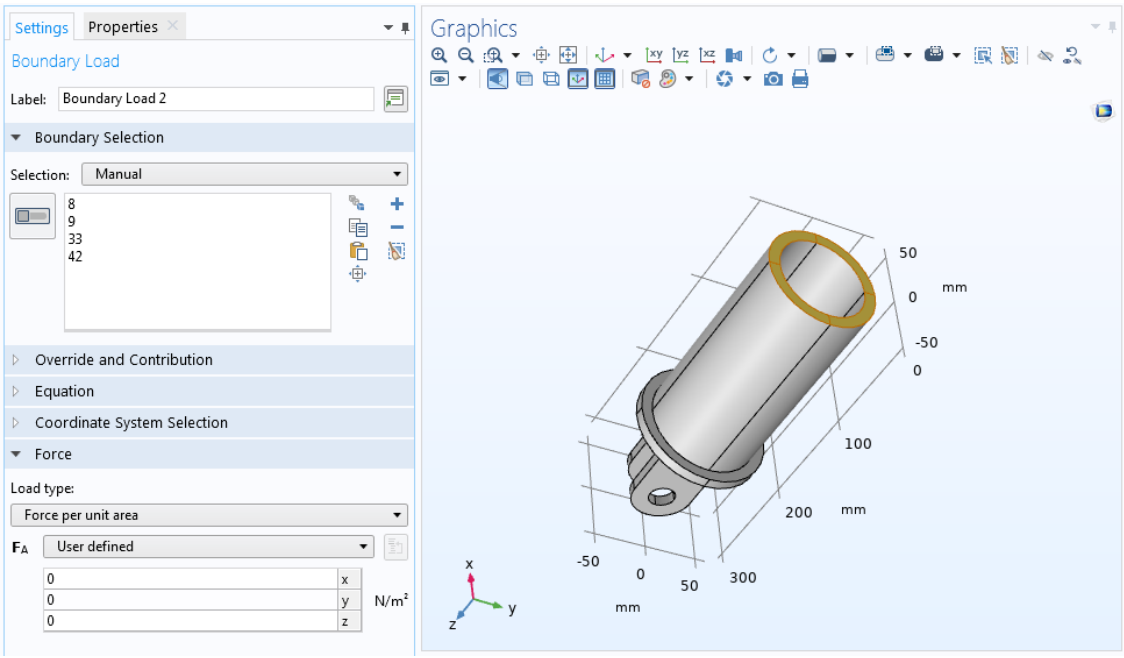

Figure 6-10: The added Boundary Load node's Settings window and its selection highlighted in yellow.

By selecting the **Show Selection for Boundary Load 2** (for example) item om the context menu, you can turn the yellow highlighting of that selection on and off. To activate the selection in the **Settings** window, turn on the **Activate Selection** button in the **Settings** window's **Boundary Selection** setting, or move to another node in the tree and then back.

SETTINGS WINDOW TOOLBAR

TABLE 6-2: GEOMETRIC ENTITY SELECTION BUTTONS ON VARIOUS SETTINGS WINDOWS

BUTTON	NAME	DESCRIPTION
	Activate Selection (on)	Click the Activate Selection button on to make the selection of geometric entities to the Selection list active for that particular node.
	Activate Selection (off)	Click the Activate Selection button off to lock/deactivate the geometric entities in the Selection list for that particular node. The selected entities in the geometry are highlighted in yellow in the Graphics window. See Figure 6-3 for an example. The Graphics window is then available for preselection of entities for a new node.
	Create Selection	Use this button to create selection nodes under Definitions to represent various parts of the geometry and simplify the process of assigning materials, model equations, boundary conditions, and model properties. See Creating Named Selections. This button is also on The Selection List Window.
	Copy Selection	Use this button to copy the selection from the list in the Settings window to the clipboard. See Copying and Pasting Selection Lists. This button is also on The Selection List Window (except when in the Geometry mode).
	Paste Selection	Use this button if you have a list of geometry objects or geometric entities in a file or document, or that you have copied using Copy Selection, that you want to type in and then paste into a selection list. If you copy a selection from a document to the clipboard, you can paste the selection using Ctrl+V. An example is a list of geometric entity numbers described as a step in a modeling instruction. See Copying and Pasting Selection Lists. This button is also on The Selection List Window (except when in the Geometry mode).
	Add to Selection	Use this button to add a geometric entity to a selection list. See Table 6-3. This button is also on The Selection List Window.
	Remove from Selection	Use this button to remove a geometric entity from the Selection list. See Table 6-3. This button is also on The Selection List Window.
	Clear Selection	Use this button to clear a selection.
	Zoom to Selection	Use this button to zoom into the selected geometric entities. This zoom operation also updates the center of rotation and sets a manual rotation center, which will stay active until you click the **Zoom Extents** or the **Go to Default 3D View** button to reset it or switch to an automatic rotation center in some other way.

The Selection List Window

Use the **Selection List** window ( ) (see Figure 6-11) to make it easier to choose objects, for example, while working with complex geometries and when you need to easily locate a geometric entity that is not easily viewed. The Selection List is particularly useful when you know the geometric entity number to select; for example, when you are following step-by-step instructions to build an example from the application libraries (in that case, you can also copy and paste the selections directly from the instructions)..

Win	To open the window, from the **Home** toolbar select **Windows>Selection List** ( ).

Mac Linux	To open the window, select **Windows>Selection List** ( ).

	The **Selection List** window is empty when Sketch visualization is used in a 2D geometry.

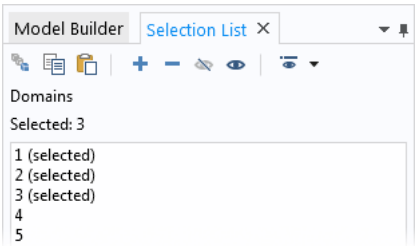

Figure 6-11: The Selection List window and toolbar. Most of the toolbar buttons are also on a node Settings windows. In this example, the numerical representation for the domains is listed. See Table 6-2 for button information.

WORKING WITH THE SELECTION LIST WINDOW

The **Selection List** window displays all geometric entities of a certain type (boundaries, for example). COMSOL Multiphysics determines the geometric entities listed based on where in the model you are working. This is different from selection lists in **Settings** windows, which contain lists of the selected entities only (see About Selecting Geometric Entities, Figure 6-6). At the top of the window, the **Selection List** window displays the number of selected entities.

Click the **Create Selection** button ( ) and enter a **Selection name** in the **Create Selection** window to create a new **Explicit** selection. See Copying and Pasting Selection Lists for information about the **Copy** and **Paste** buttons.

Use the **Add to Selection** button ( ) to add a selected entity from the **Selection List** window to a selection for boundary condition, for example. Use the **Remove from Selection** button ( ) to remove selected items from a selection. Use the **Hide** ( ) and **Show** ( ) buttons to hide and show selected geometric entities, respectively. You can also right-click an item in the selection list and choose any of those four menu options (**Add to Selection**, **Remove from Selection**, **Hide**, or **Show**).

Selecting from and Filtering the Selection List

The selected items in the **Selection List** window are indicated by **(selected)** next to the entity label, except if you choose to only list the selected items by selecting **Only List Selected** from the **Filter List** menu ( ) on the **Selection List** toolbar.

Click any item to see it highlighted in The Graphics Window — except if the item is hidden, which is indicated in the Selection List by **(hidden)**, unless you choose to only list the visible items by selecting **Only List Visible** from the **Filter List** menu ( ) on the **Selection List** toolbar — and select items as described in Selecting and Clearing Selection of Geometric Entities.

From the **Filter List** menu ( ) on the **Selection List** toolbar, you can filter the list of selected entities by choosing **Only List Selected**, **Only List Visible**, and **Only List Applicable** as desired. Choose to **Only List Applicable** if the model includes many entities that are selected but not applicable, for example.

Using the Selection List

For example, you can use the Selection List in the following situations.

Materials, Physics, and Boundary Conditions: When working in windows with Selection or Geometric scope sections (a **Selection** window under a **Definitions** node for example), or anywhere you assign materials, physics features, boundary conditions, and other Component settings. The Selection List displays the specific *geometric entity level* selected (domain, boundary, edge, or point).

Geometry: When in the Model Builder under the **Geometry** node, the geometry objects are displayed in the **Entities to select**, for example, `ext1` (extrusion), `blk1 (solid)`, or `cone1 (solid)` (Figure 6-12). You might also use it with a Chamfer or Fillet geometry feature when you want to locate specific points. To specify the selection level, click the **Select Points** button in the **Graphics** window toolbar and add the points to the **Vertices to fillet** or **Vertices to chamfer** lists. See Creating Named Selections in the Geometry Sequence for details about creating selections based on geometry sequences.

Meshing: When in the Model Builder under the **Mesh** node, the list also includes information on which entities are meshed by adding **(meshed)** to the right of the meshed entities. If the Geometry has Mesh Construction entities, the list also specifies if a construction entity has been removed; see Mesh Control Entities. This is indicated next to the entity in the list by **(meshed and removed)**.

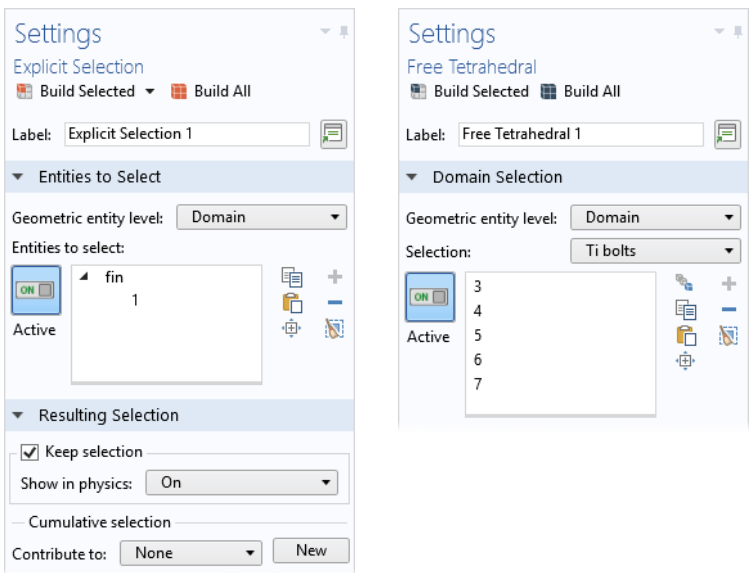

Figure 6-12: An example of a Settings window for Explicit Selection for a Geometry sequence (left) and a Free Settings window for Tetrahedral for a Mesh node (right).

- Creating Named Selections
- Creating Named Selections
- About Selecting Geometric Entities

Selecting and Clearing Selection of Geometric Entities

The sections About Selecting Geometric Entities and The Selection List Window give an overview of some of the tools and windows available to highlight and select geometric entities. About Highlighted Geometric Entities in

the Graphics Window describes the different colors that display in the Graphics window to help you select geometric entities to include in your model.

Table 6-3 contains the description of the different ways to complete the same task of selecting (or deselecting) geometric entities.

TABLE 6-3: DIFFERENT WAYS TO SELECT GEOMETRIC ENTITIES

TASK	ACTION
Select any level of geometry:	In The Graphics Window, click the geometric entity to add it to an active selection list in the current node's Settings window. Open The Selection List Window and click entity numbers (or names); then click the **Add to Selection** button ( ) to add it to an active selection list in the current node's Settings window. You can also add an entity to an active selection list in the current node's Settings window by double-clicking it or by right-clicking it and selecting **Add to Selection**.
Select all parts of the geometry:	In most **Settings** windows' selection sections, the option to select **All domains**, **All boundaries**, **All edges**, or **All points** adds all geometric entities of that type to the list of selected entities. The selected items are highlighted in the **Graphics** window and all entities are kept selected, even if the geometry changes. Open The Selection List Window and use the Shift or Ctrl keys to select all of the entity names (or numbers). You can also click the main geometry node to select all entities that the node includes. Then click the **Add to Selection** button ( ) to add it to an active selection list in the current node's **Settings** window. In the **Graphics** window, click the **Select All** button (in 3D), or click outside of the geometry or press Ctrl+A to select all entities. For Windows users, a **Select All** button is available on a customized Quick Access Toolbar. For macOS and Linux users, from the main menu select **Edit>Select All**. This highlights and selects all entities but does not confirm the selection or lock it if the model changes.
Clear the selection of all parts of the geometry not added to a selection list:	In the **Graphics** window, click the **Clear Selection** button ( ), or click outside of the geometry or press Ctrl+D to clear all selected entities. For Windows users, a **Clear Selection** button is available on a customized Quick Access Toolbar. For macOS and Linux users, from the main menu select **Edit>Clear Selection**.
Move, rotate, and then select (3D only):	Multiple mouse actions can be done together. For example, use the mouse to rotate or move the object left and right to locate the geometric entity to add to a selection list; then click to add to the selection.
Lock the geometry selection settings during selection:	In the **Graphics** window, click the **Disable Mouse Selection** button ( ). Then no clicks in the graphics highlight or select any geometric entities, which makes it possible to move and rotate the geometry freely.
Add to Selection :	In the **Graphics** window, click a red highlighted entity to add it and make it blue. Or select one or more geometric entities and click the **Add to Selection** button. In the **Selection List** window, select the entity names to add, and click the **Add to Selection** button. You can also paste selections from a file. See Copying and Pasting Selection Lists for information. For user-defined selections this action must be completed on the selection page. See Create an Explicit Selection from the Selection List Window for information.

TABLE 6-3: DIFFERENT WAYS TO SELECT GEOMETRIC ENTITIES

TASK	ACTION
Select Box :	To select multiple parts of the geometry, in the **Graphics** window, click the **Select Box** list and choose **Entity Intersects** ( ) or **Entity Inside** ( ) (the default); then click and hold the left mouse button to draw a box over the geometry. The cursor changes its look to for **Entity Intersects** and for **Entity Inside**. It is like a "rubberband," selecting all entities intersected (if you have selected **Entity Intersects**) or enclosed (if you have selected **Entity Inside**) by this operation. Using the **Entity Intersects** can make it easier to select entities that are hard to fully enclose. The selected geometric entities are added to the selection list. If you select **Keep Enabled After Use** from the **Select Box** list, you can continue to select entities using a box selection in the **Graphics** window. In the **Selection List** window, use the Shift or Ctrl keys to select the entity names (or numbers). Click the **Add to Selection** button.
Deselect Box :	To deselect multiple parts of the geometry, in the **Graphics** window, click the **Deselect Box** list and choose **Entity Intersects** ( ) or **Entity Inside** ( ) (the default) ; then click and hold the left mouse button to draw a box over the geometry. The cursor changes its look to for **Entity Intersects** and for **Entity Inside**. It is like a "rubberband," deselecting all entities intersected (if you have selected **Entity Intersects**) or enclosed (if you have selected **Entity Inside**) by this operation. Using the **Entity Intersects** can make it easier to deselect entities that are hard to fully enclose. The deselected geometric entities are removed from the selection list. If you select **Keep Enabled After Use** from the **Deselect Box** list, you can continue to deselect entities using a box selection in the **Graphics** window. In the **Selection List** window, use the Shift or Ctrl keys to select the entity names (or numbers). Click the **Remove from Selection** button.
Select Objects: 3D 2D 1D	In the **Graphics** window, click the **Select Objects** button. Click to select the geometry object and add it to the selection list.
Select Domains: 3D 2D 1D	In the **Graphics** window, click the **Select Domains** button. Click to select the domains and add it to the selection list. In the **Settings** window, select **Domain** from a **Geometric entity level** list and then click in the **Graphics** window. Only domains are highlighted.
Select Boundaries: 3D 2D 1D	In the **Graphics** window, click the **Select Boundaries** button. Click to select the boundary and add it to the selection list. In the **Settings** window, select **Boundary** from a **Geometric entity level** list and then click in the **Graphics** window. Only boundaries are highlighted.
Select Edges :	In the **Graphics** window, click the **Select Edges** button. Click to select the edge and add it to the selection list. In the **Settings** window, select **Edge** from a **Geometric entity level** list and then click in the **Graphics** window. Only edges are highlighted.
Select Points: 3D 2D	In the **Graphics** window, click the **Select Points** button. Click to select the point and add it to the selection list. In the **Settings** window, select **Point** from a **Geometric entity level** list and then click in the **Graphics** window. Only points are highlighted.
Disable Mouse Selection: 3D 2D 1D	In the **Graphics** window, click the **Disable Mouse Selection** button to turn off all selections so that you can click in the Graphics window to move or rotate the geometry, for example, without adding any object or entity to a selection.
Select All :	In the **Graphics** window, click the **Select All** button to select all objects or entities.

TABLE 6-3: DIFFERENT WAYS TO SELECT GEOMETRIC ENTITIES

TASK	ACTION
Remove from Selection :	In the list, mark the geometric entity and click the **Remove from Selection** button. In the **Graphics** window, click to highlight and select the geometric entity to remove. Any blue geometric entity turns gray to indicate it is removed from the selection. In the **Selection List** window, use the Shift or Ctrl keys to select the entity names to remove. Click the **Remove from Selection** button. For user-defined selections this action must be completed on the selection page. See Create an Explicit Selection from the Selection List Window for information.
Clear Selection :	Click the **Clear Selection** button to clear all selections from the selection list. For user-defined selections this action must be completed on the selection page. See Create an Explicit Selection from the Selection List Window for information.
Activate Selection :	Activate a selection into the selection list in the Settings window where this button appears. If it is turned off, you instead make a preselection.

The Graphics Window Toolbar Buttons and Navigation

Some of the toolbar buttons available on the **Graphics** window are different based on the space dimension of the Component. The buttons also correspond to domain, boundary, edge, and point level nodes that display under the physics interface, which are also based on the Component space dimension as shown in Table 6-4. The buttons in Table 6-5 are available in any space dimension.

In the tables there are links to the corresponding sections that contain instructions about how to do the listed tasks.

TABLE 6-4: GRAPHICS WINDOW TOOLBAR BUTTONS BY SPACE DIMENSION

NAME	3D	2D AND 2D AXISYMMETRIC	1D AND 1D AXISYMMETRIC
Selecting and Clearing Selection of Geometric Entities			
Select Boundaries			
Select Box			
Deselect Box			
Select Domains			
Select Objects			
Select Points			—
Select Edges		—	—
Disable Mouse Selection			
The Sketch Visualization			
Select Edges			
Select Vertices			
Select Constraints and Dimensions (Design Module only)			
Changing Views in the Graphics Window			
Go to XY View	xy	—	—

TABLE 6-4: GRAPHICS WINDOW TOOLBAR BUTTONS BY SPACE DIMENSION

NAME	3D	2D AND 2D AXISYMMETRIC	1D AND 1D AXISYMMETRIC
Go to YZ View		—	—
Go to XZ View		—	—
Rotate Right 90°		—	—
Rotate Left 90°		—	—
Show Axis Orientation		—	—
Show Grid			—
x-Axis Log Scale	—	—	
y-Axis Log Scale	—	—	
Show Legends			
Lighting, Transparency, Projection, and Wireframe Rendering			
Scene Light		—	—
Transparency		—	—
Orthographic Projection		—	—
Wireframe Rendering		—	—
Mesh Rendering			—
Drawing on a 2D Work Plane in 3D			
Align with Work Plane*	—		—
Work Plane Clipping*	—		—

*These buttons are available when using a Work Plane to define 2D objects in 3D.

TABLE 6-5: GRAPHICS TOOLBAR BUTTONS AVAILABLE FOR ALL SPACE DIMENSIONS

BUTTON	NAME	SEE ALSO
	Select All (Ctrl+A)	
	Clear Selection (Ctrl+D)	
	Click and Hide	Hiding and Showing Geometric Entities
	View Unhidden	
	View Hidden Only	
	View All	
	Reset Hiding	

TABLE 6-5: GRAPHICS TOOLBAR BUTTONS AVAILABLE FOR ALL SPACE DIMENSIONS

BUTTON	NAME	SEE ALSO
	Zoom In	Zooming In and Out in the Graphics Window
	Zoom Out	
	Zoom Box	
	Zoom to Selection	
	Zoom Extents	
	Go to Default View	Changing Views in the Graphics Window
	Suppress Selection Highlight	Selection Colors
	Colors (Show Selection Colors in 2D and 3D and Show Material Color and Texture in 3D)	Selection Colors
	Quick Snapshot	Capturing and Copying Screenshots
	Image Snapshot	Capturing and Copying Screenshots
	Print	Printing from the COMSOL Desktop

ZOOMING IN AND OUT IN THE GRAPHICS WINDOW

BUTTON	NAME	ACTION
and	Zoom In and Zoom Out	Click the **Zoom In** button to zoom in. Click the **Zoom Out** button to zoom out. Click the middle mouse button and drag it forward and backward to zoom in and out of the object. The zoom is centered where the first click is made in the **Graphics** window.
	Zoom Box	To zoom into a general area of the geometry, click the **Zoom Box** button; then click and drag to highlight a section of the geometry to zoom into. Click the arrow to the right of the **Zoom Box** button to select **Keep Enabled After Use** if you want to continue to zoom using a box without having to click the **Zoom Box** button again.
	Zoom to Selection	Click the **Zoom to Selection** button to zoom into the selected geometric entities. This button is also available in connection with the selection lists for domains, boundaries, edges, and points. This zoom operation also updates the center of rotation and sets a manual rotation center, which will stay active until you click the **Zoom Extents** or the **Go to Default 3D View** button or otherwise change the mode of the rotation center.
	Zoom Extents	Click the **Zoom Extents** button to zoom out and fit the complete geometry into the window.
	Zoom to Point	Ctrl+middle-mouse click to zoom to the point that the mouse points to. This zoom action sets a manual rotation center and zooms into the point.

CHANGING VIEWS IN THE GRAPHICS WINDOW

BUTTON	NAME	ACTION
xy yz zx	Go to XY View, Go to YZ View, and Go to XZ View (3D only)	Click the **Go to XY View**, **Go to YZ View**, and **Go to XZ View** buttons to change the view to the xy-, yz-, or xz-plane in a 3D Graphics window. The first click selects the plane view with a positive normal direction. A second click on the same button switches to a negative normal direction. A third click flips the direction in the plane, and a fourth click switches the normal again, so the clicks cycle through all four possible views for the chosen plane.
	Go to Default View	Click the **Go to Default View** button to change the view to the default view in a 3D Graphics window.
	Display a user-defined view:	After creating a **View** under the **Definitions** node, click the down arrow next to the **Go to View** button ( ) and select a user-defined view from the list.
	Rotate Right 90°, Rotate Left 90°	Click the **Rotate Right 90°** and **Rotate Left 90°** buttons to rotate a geometry in a 3D Graphics window by 90° in the right (clockwise) or left (counterclockwise) direction.
	Show Axis Orientation	Click the **Show Axis Orientation** button to toggle the display of the axis orientation indicator (triad) in the lower-left corner of the 3D Graphics window on or off.
	Show Grid	Click the **Show Grid** button to toggle the display the grid box on or off in the 2D and 3D Graphics window.
	Show Legends	Click the **Show Legends** button to toggle the display of the color legend and color scale on or off in 2D and 3D Graphics windows or to toggle the display of legends on or off in 1D Graphics windows.

MOVING AROUND AND ROTATING A 3D GEOMETRY

There are many options available for moving around the **Graphics** window and rotating 3D geometries, in addition to the buttons for changing views listed under Changing Views in the Graphics Window above.

Controlling the Rotation

As the default, there is an automatic rotation center, so that the rotation center switches if there is something observable in the screen center. The automatic rotation center is good for navigating the model but not always for working on a local area of a big model. For that purpose, you can switch to a manual rotation center. Click the

middle mouse button to set a new rotation center if you want to temporarily fix the rotation center (a manual rotation center). Zooming to a point or a selection also sets a manual rotation center. If you middle-click somewhere in the **Graphics** window where there is no object, the rotation center switches back to the automatic mode. The manual rotation center is only temporary and is be reset to th automatic mode if you click the **Zoom Extents**, **Go to Default View**, **Go to XY View**, **Go to YZ View**, or **Go to XZ View** button. You can switch between automatic and manual modes by pressing the R key, and the rotation center icon will appear to indicate the current mode, if it is activated. See the preferences settings below for disabling the automatic rotation center and the middle-mouse clicking and controlling the visibility of the rotation center icon, if desired.

If you want to permanently lock the current rotation center (in rare cases you may need to do so; perhaps for creating snapshot images for a report), select the **Lock rotation center** check box in the **View** node's **Settings** window. It locks the rotation center permanently, so you have to clear this check box to unlock it. The current locked rotation center will be saved in the model.

The automatic, manual, and locked modes have different rotation center icons on the screen when you rotate the object or perform any mouse operation:

- For the automatic mode: .
- For the manual mode: .
- For the locked mode: .

The rotation center icon can be visible or hidden. You can specify the visibility in the **Preferences** dialog box, on the **Graphics and Plot Windows** page, as well as controlling if the automatic rotation center and the middle-click for specifying the rotation center should be active. Under **Rotation center**, the following settings are available:

- Clear the **Auto** check box to turn off the automatic rotation center (which is active by default).
- Clear the **Set with mouse middle-click** check box to turn off the automatic rotation center (which is active by default).
- From the **Visibility** list, choose **Always hide** (the default) to never show the rotation center icon, **Shown only on mouse action** to show it only when you click the mouse or press R to change the rotation center, or **Always show** to make it visible always.

	Setting the manual rotation point in the **Graphics** windows is only supported for the OpenGL renderer.

Constrained Rotation

To rotate around the x-, y-, and z-axis, use the X, Y, and Z keyboard shortcuts. If you press and hold the X key when rotating a 3D geometry, it will rotate around the x-axis only (lock the x-axis). In the same way, press and hold the Y and Z keys to rotate around the corresponding axis. You can switch the rotation while rotating with the left mouse button active; for example, press and hold the X key and then release it; then press and hold the Y key to switch between locking the x-axis and the y-axis without releasing the left mouse button.

ADDITIONAL TOOLS FOR MOVING, ZOOMING, AND ROTATING

In addition, the following list contains tools that are available for moving, zooming, and rotating geometries in the Graphics window. Except where stated otherwise, these tools are available for 3D geometries only.

TASK	ACTION AND RESULT	OPERATION ORDER
Rotate the objects in the scene around the scene's rotation center.	In the **Graphics** window, click and hold down the mouse button while dragging it in any direction. This rotates the scene around the axes parallel to the screen X- and Y-axes with the origin in the scene rotation point.	click
Move the visible frame on the image plane in any direction (pan)	In the **Graphics** window, right-click and hold down the mouse button while dragging it in any direction. Available in all space dimensions.	right-click
Zoom in and out around the mouse position where the action started	In the **Graphics** window, click and hold down the middle mouse (scroll wheel) button and drag the mouse forward or back to zoom in and out (change the view angle of the camera in 3D). Available in all space dimensions.	middle-click
Set the manual rotation center	In the **Graphics** window, click the middle mouse button.	middle-click
Rotate about the X- and Y-axes in the image plane (tilt and pan the camera)	Press Ctrl and click in the **Graphics** window. While holding down the key and button, drag the mouse in any direction. This places the rotation coordinate system in the camera (the camera look-at axis) and rotates around the axes parallel to the screen X- and Y-axes. You can also constrain the rotation around the x-, y-, and z-axis using the X, Y, and Z keys, respectively. See Constrained Rotation.	Ctrl+click
Move the camera origin in the plane that intersects the camera origin and that is orthogonal to the camera look-at axis	Press Ctrl and right-click in the **Graphics** window. While holding down the key and button, drag the mouse in any direction.	Ctrl+right-click
Move the camera into and away from the object (dolly in/out)	Press Ctrl and then click the middle mouse button. While holding down both the key and button, in the **Graphics** window, drag the mouse in any direction.	Ctrl+middle-click, hold and drag
Move the camera origin along the camera look at axis	Press Ctrl and then click the middle mouse button (scroll wheel).	Ctrl+middle-click
Rotate the objects in the scene about the axis that intersects the camera origin and the scene's rotation center (roll direction)	Press Alt, then click in the **Graphics** window. While holding down the key and button, drag the mouse in any direction.	Alt+click
Move the camera origin in the plane that intersects the camera origin and that is orthogonal to the axis that intersects the camera origin and the scene's rotation center	Press Alt, then right-click the mouse in the **Graphics** window. While holding down the key and button, drag the mouse in any direction.	Alt+right-click

TASK	ACTION AND RESULT	OPERATION ORDER
Move the camera origin along the axis that intersects the camera origin and the scene's rotation center	Press Alt, then middle-click in the **Graphics** window. While holding down the key and button (scroll wheel), drag the mouse in any direction.	Alt+middle-click
Rotate the objects in the scene about the camera look-at direction	Press Ctrl+Alt, then click in the **Graphics** window. While holding down the keys and the button, drag the mouse in any direction. If you have not rotated the camera (using Ctrl+click), the effect is the same as when using Alt+click.	Ctrl+Alt+click

LIGHTING, TRANSPARENCY, PROJECTION, AND WIREFRAME RENDERING

The following are available for 3D models.

BUTTON	NAME	ACTION
	Scene Light	Click any plot under **Results**. In the **Graphics** window or any other plot window, click the **Scene Light** button to turn it on. Click again to turn scene light off. See Figure 6-13. When creating a **View**, this action toggles the **Scene light** check box on the **View** page.
	Transparency	Click any plot under **Results**. In the **Graphics** window or any other plot window, click the **Transparency** button to turn it on. Click again to turn transparency off. See Figure 6-13. When creating a **View**, this action toggles the **Transparency** check box on the **View** page. See User-Defined Views.
	Orthographic Projection	Click this button to use orthographic projection; otherwise, perspective projection is used.
	Wireframe Rendering	Click any plot under **Results**. In the **Graphics** window, click the **Wireframe Rendering** button to turn it on. Click again to turn the wireframe off. See Figure 6-13. Note that wireframe rendering only has effect when mesh rendering is turned off (for a view that normally shows the mesh). When creating a **View**, this action toggles the **Wireframe rendering** check box on the **View** page. See User-Defined Views. See also Preferences Settings to set the level of graphic detail to Wireframe and speed up the rendering of complex models or to improve visual appearance.

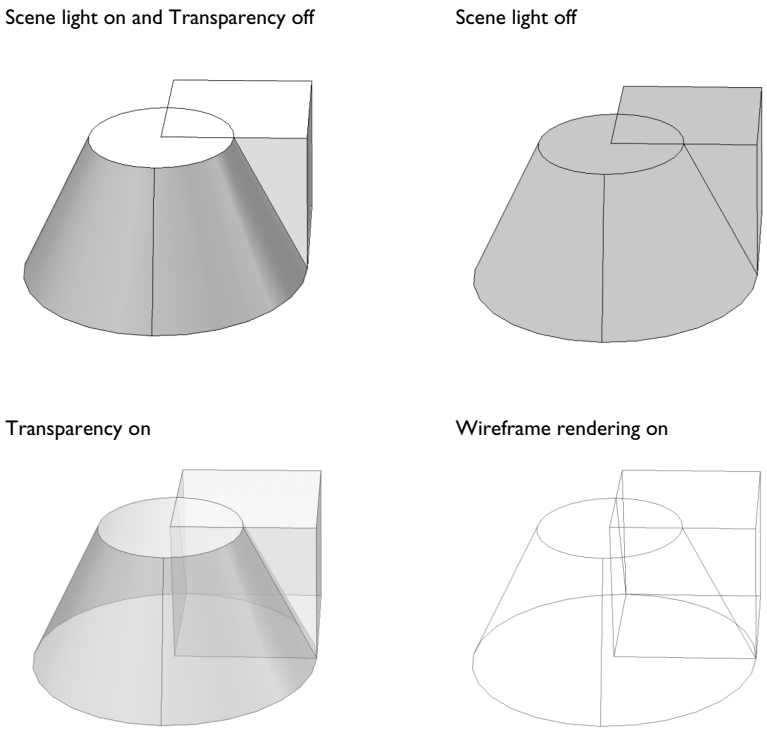

Figure 6-13: Scene light, transparency, and wireframe rendering examples.

HIDING AND SHOWING GEOMETRIC ENTITIES

Selecting an item in any **Selection** list highlights the corresponding geometric entities or objects in the **Graphics** window for selection or deselection. Only the geometric entities you can see in the **Graphics** window are available

for selection; that is, hidden objects cannot be selected and selection methods vary based on the Component's space dimension.

BUTTON	NAME	ACTION
	Click and Hide	In the **Graphics** window, toggle the **Click and Hide** button (click to highlight and turn on and click again to turn off). When turned on, click a geometric entity or geometry object, and it is then hidden and added to the list of hidden entities or hidden geometries in the Hide for Geometry or Hide for Physics node under a View. In the **Selection** lists, **(hidden)** appears next to the entity number. When click and hide is active, the cursor changes to indicate that clicking now hides objects: . See Figure 6-14. The click and hide functionality is turned off when you activate any of the following actions: • Clicking an **Active** button in the **Settings** window (that is, activating or deactivating the selection). • Changing the selection in the Model Builder, manually or as a side effect of some other action such as adding a new feature. • In 2D, clicking the **Edit Object** button. When creating a **View**, right-click the **View** node and select **Hide for Geometry** or **Hide for Physics**, depending on the current node in the model tree. Select a **Geometric entity level** from the list to hide. Also see Hide for Geometry, Hide for Physics, and Hide for Mesh Import when creating a **View**.
	View Unhidden	In the **Graphics** window, click the **View Unhidden** button to display any geometry objects, domains, boundaries, edges, or points not hidden.
	View Hidden Only	In the **Graphics** window, click the **View Hidden Only** button to display only hidden geometry objects, domains, boundaries, edges, or points.
	View All	In the **Graphics** window, click the **View All** button to display all hidden and unhidden geometry objects, domains, boundaries, edges, or points.
	Reset Hiding	In the **Graphics** window, click the **Reset Hiding** button to reset all hidden geometry objects, domains, boundaries, edges, or points to the default. This removes any **Hide for Geometry** or **Hide for Physics** subnodes added to a **View** node (when in geometry mode, **Hide for Physics** subnodes are not removed).

	When the **View Hidden Only** button ( ), **View Unhidden** button ( ), or **View All** button ( ) is clicked on the **Graphics** window toolbar, it changes the view accordingly. The selection list on the **Settings** window details what is hidden or shown based on the button clicked. See Figure 6-14 and Figure 6-15 for examples based on the original geometry shown in About Highlighted Geometric Entities in the Graphics Window.

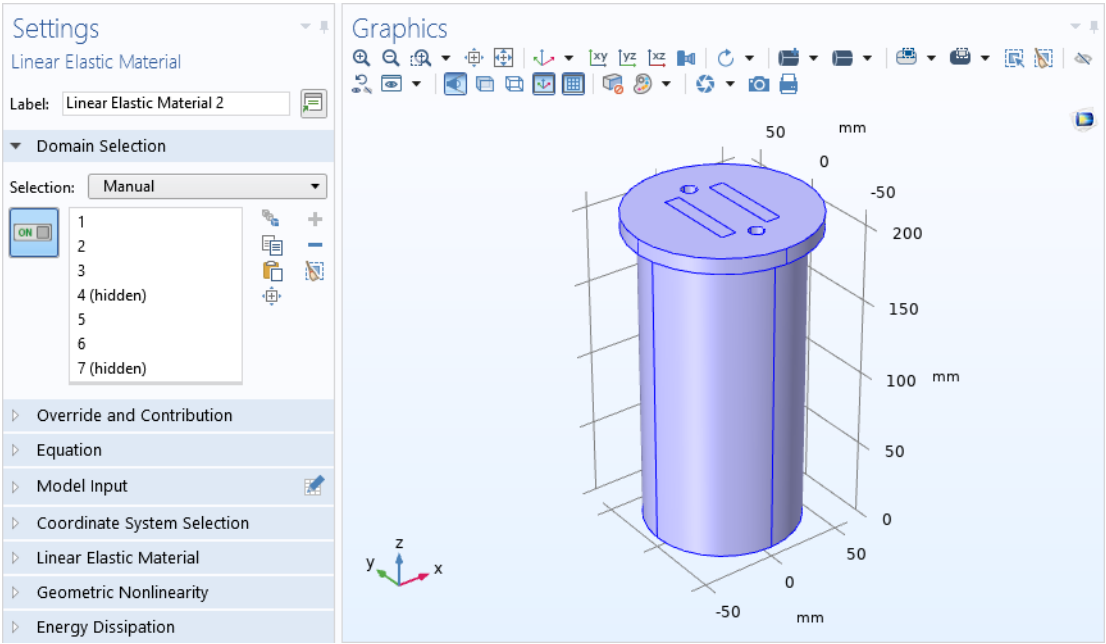

Figure 6-14: An example of the domains that display in the Graphics window when the View unhidden button is clicked. The selection list displays the detail that domains 4 and 7 are hidden in the Graphics window. Compare to Figure 6-15.

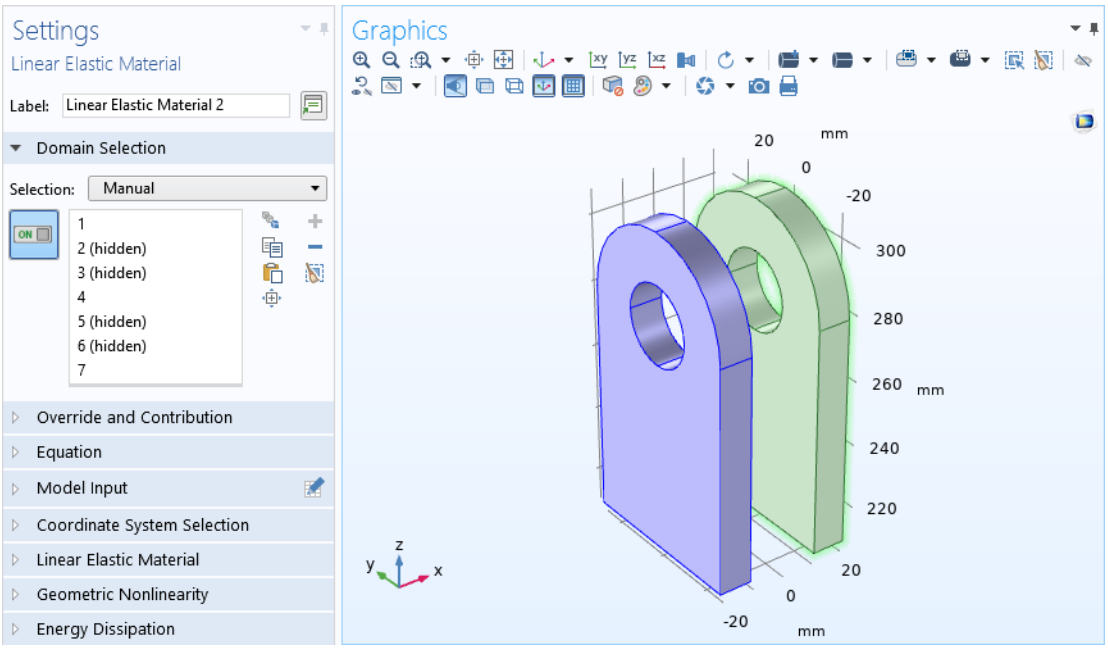

Figure 6-15: An example of the domains that display in the Graphics window when the View unhidden only button is clicked. The selection list displays the detail that domains 2, 3, 5, and 6 are hidden in the Graphics window. Compare to Figure 6-14.

Using A 3D Mouse from 3Dconnexion

The COMSOL Desktop on Windows supports the use of a 3D space mouse (SpaceMouse®) from 3Dconnexion® for mouse navigation.

To enable the 3D mouse support, select the **3Dconnexision space mouse** check box under **Mouse** on the **Graphics and Plot Windows** page in the **Preferences** dialog box.

If you want to change the setting of the SpaceMouse or customize the buttons, click **Open 3DConnexion Properties** in the tray icon of your space mouse. If you are a new user of a SpaceMouse, first run the SpaceMouse Training of the startup driver panel of your Space Mouse. You can then learn how to control your objects with the SpaceMouse.

In the settings for the SpaceMouse, you can specify the following personalized preferences:

- Speed: adapt the moving and rotating speed of the objects.
- Advanced Settings: In the Advanced Setting, you can control the speed of each degree of freedom, respectively. You can also disable the corresponding degree of freedom.
- Buttons: COMSOL Multiphysics has exposed a number of Actions/Commands; see, for example, commands in the Views section of the buttons settings page.
- Radial Menu: They can be useful in your Buttons section; you can bind your commands as you want.
- In the Buttons section, you can also bind a keyboard combination to trigger COMSOL actions; for example, Ctrl+O, which will trigger COMSOL Multiphysics to open a file.

PANNING AND ZOOMING IN 1D GRAPH PLOTS

For 1D graph plots, you can use the following mouse movements to pan and zoom (in addition to the zoom buttons; see Zooming In and Out in the Graphics Window):

- To pan in the x and y directions, right-click in the **Graphics** window and drag the mouse in the direction for the pan. Right-click to the left of the y-axis (outside the plot area) to pan in the y direction only. Likewise, if the plot includes a secondary y-axis to the right, right-click to the right of the secondary y-axis (outside the plot area) to pan in the y direction only for the quantity represented by the secondary y-axis. Right-click below the x-axis (outside the plot area) to pan in the x direction only.
- To zoom in the x and y directions, middle-click in the **Graphics** window and drag the mouse to zoom in or out. Middle-click to the left of the y-axis (outside the plot area) to zoom in the y direction only. Likewise, if the plot includes a secondary y-axis to the right, middle-click to the right of the secondary y-axis (outside the plot area) to zoom in the y direction only for the quantity represented by the secondary y-axis. Middle-click below the x-axis (outside the plot area) to zoom in the x direction only.

Customizing the Graphics Toolbars

You can control the visibility and layout of the sections in the toolbar on top of the **Graphics** window. To do so, open the **Preferences** dialog box and click Graphics Toolbars to open the page where you can control the display of the graphics toolbars.

From the **All groups** list under **Display in graphics toolbars**, you can choose one of the following options:

- Choose **Normal** (the default) to use the default layout of the graphics toolbars.
- Choose **Hidden** to completely remove the graphics toolbars.
- Choose **Compact** to use one menu button for all actions in all toolbar groups
- Choose **Wide** to display all menu items in all toolbar groups where applicable.
- Choose **User defined** to choose one of the options above for each toolbar group individually.

When all groups are available (when you have chosen **User defined**), there is also a **Set All** button. When you click it, a **Set All** window opens where you can choose **Hidden**, **Compact**, **Normal**, or **Wide** for all groups.

Creating Named Selections

Introduction

This section details how to create named selections to reuse throughout the model component when assigning material properties, boundary conditions, and other model settings.

You can create selection nodes under the Component node's Definitions node to represent various parts of the geometry and simplify the process of assigning materials, model equations, boundary conditions, and other model properties. These user-defined selections can be reused during modeling and named using descriptive titles — for example, `Tube`, `Wall`, or `Fluid`. Changes to the selection (for example, by adding or removing a boundary) updates all nodes in the Component that use that particular selection. You can also use a named selection to create a certain parts of the geometry that you want to hide from the view (see Hide for Physics).

Use the buttons listed in Table 6-2 to create, copy, and paste selections. When there is the possibility of overlapping geometric entities, it is recommended that you use The Selection List Window to ensure the correct part of the geometry is selected.

There are different types of selections: Explicit selections, selections by enclosing part of the geometry by a bounding Ball, Box, or Cylinder, Boolean selections (Union, Intersection, Difference, and Complement), and selections of Adjacent geometric entities. To add selection nodes, right-click a **Definitions** node and choose from the **Selections** options as listed in Table 6-6.

You can also right-click the **Geometry** node and choose from **Selections** options similar to those in Table 6-6 for defining selections based on the geometry objects in the geometry sequence. See Creating Named Selections in the Geometry Sequence.

The selections can be highlighted using a color scheme to make it easier to see the geometric entities that are included in a named selection. See Selection Colors.

OPEN AN EXAMPLE MODEL WITH DEFINED EXPLICIT SELECTIONS

Figure 6-16 uses a COMSOL Multiphysics Applications Libraries example, which includes several user-defined selections.

1. Open The Application Libraries Window.
2. Navigate to the **COMSOL Multiphysics>Structural Mechanics>mast_diagonal_mounting** model file. Double-click to open it.
3. Expand the **Definitions** node under **Component 1**. Several nodes display in the **Model Builder**. Click the nodes shown in Figure 6-16 to examine the list of geometric entities displayed in the **Settings** window for **Explicit**.

	In the selection **Settings** windows, also click the **Zoom to Selection** ( ) button to zoom in on the selected geometric entities.

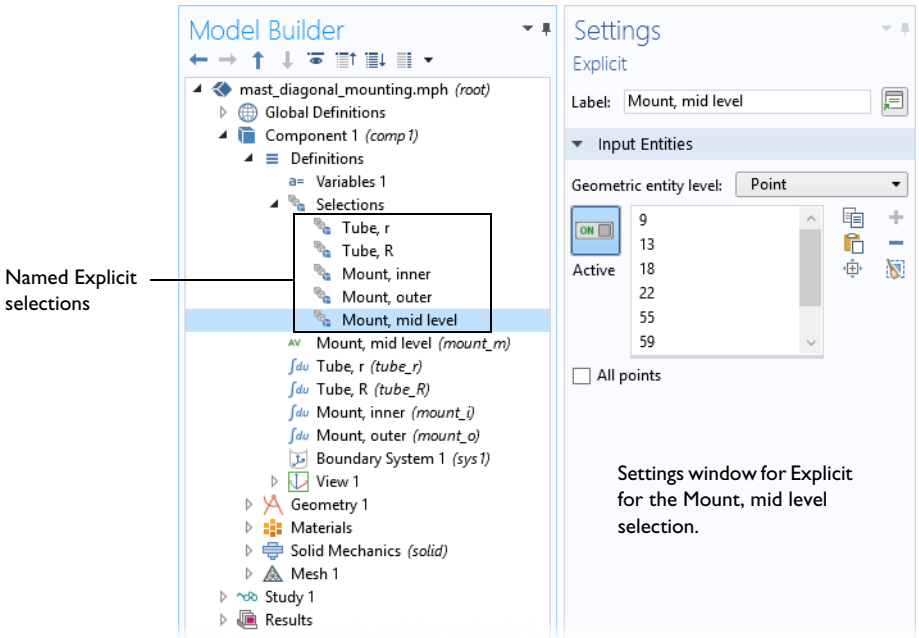

Figure 6-16: An example of an Explicit selection window for the Mount, mid level node. The Selection nodes under Definitions are renamed by the user.

THE TYPES OF NAMED SELECTIONS

TABLE 6-6: NAMED SELECTIONS BY TYPE

ICON	TYPE	DESCRIPTION
	Adjacent	Use the Adjacent node to create the selection as the adjacent geometric entities (boundaries, for example) to one of more selections.
	Ball	Use the Ball node to create the selection by enclosing part of the 3D geometry by a bounding ball (sphere) to select geometric entities that are partially or completely inside the ball.
	Box	Use the Box node to create the selection by enclosing part of the 3D geometry by a bounding box to select geometric entities that are partially or completely inside the box.
	Cylinder	Use the Cylinder node to create the selection by enclosing part of the 3D geometry by a bounding solid or hollow cylinder or cylinder segment to select geometric entities that are partially or completely inside the cylinder.
	Disk	Use the Disk node to create the selection by enclosing part of the 2D geometry by a bounding solid or hollow disk or disk segment to select geometric entities that are partially or completely inside the disk.
	Explicit	Use an Explicit node to create the selection using the normal selection tools for individual geometric entities (boundaries, for example) on the geometric entity level chosen.
Union, Intersection, Difference, and Complement		
	Union	Use the Union node to create the selection as the union (addition) of two or more selections.
	Intersection	Use the Intersection node to create the selection as the intersection of two or more selections.
	Difference	Use the Difference node to create the selection as the difference between a set of one or more selections and another set of one or more selections.
	Complement	Use the Complement node to create the selection as the complement (inverse) of one or more selections.

- Grouping Nodes by Space Dimension and Type
- Creating Named Selections in the Geometry Sequence
- Working with Geometric Entities

Creating Named Selections

There are several ways to create named selections. Toolbar buttons are available on **Settings** windows and The Selection List Window (see Table 6-2) to help group the geometric entities into manageable and easily identifiable selections that can be chosen from the **Selection** list on a **Settings** window, for example.

- Create a Selection using the Definitions Node
- Create an Explicit Selection from a Settings Window
- Copying and Pasting Selection Lists
- Create an Explicit Selection from the Selection List Window

CREATE A SELECTION USING THE DEFINITIONS NODE

There are several types of selections that can be created. For each type, choose to add it from the **Definitions>Selections** submenu. In the **Settings** window that opens, define the selection for that particular selection type. See The Types of Named Selections (Table 6-6) for a list and links to more information about the settings.

CREATE AN EXPLICIT SELECTION FROM A SETTINGS WINDOW

1 At any time during model creation, click a node that has the option to add a geometric entity to a selection, for example, under the **Materials** node or for the **Fixed Constraint** node for a **Solid Mechanics** interface as in Figure 6-17.

2 In the **Settings** window that opens, select an option from the **Selection** list, for example, **Manual** or **All boundaries**.

3 Click the **Create Selection** button ( ) and enter a **Selection name** in the **Create Selection** window, for example, `Fixed Constraint Boundaries`. Click **OK** or press enter.

4 In the **Model Builder** the new **Explicit** node (now named `Fixed Constraint boundaries`) is added under **Definitions**. After creating these named selections, the **Selection** list displays the name in the list as in Figure 6-18.

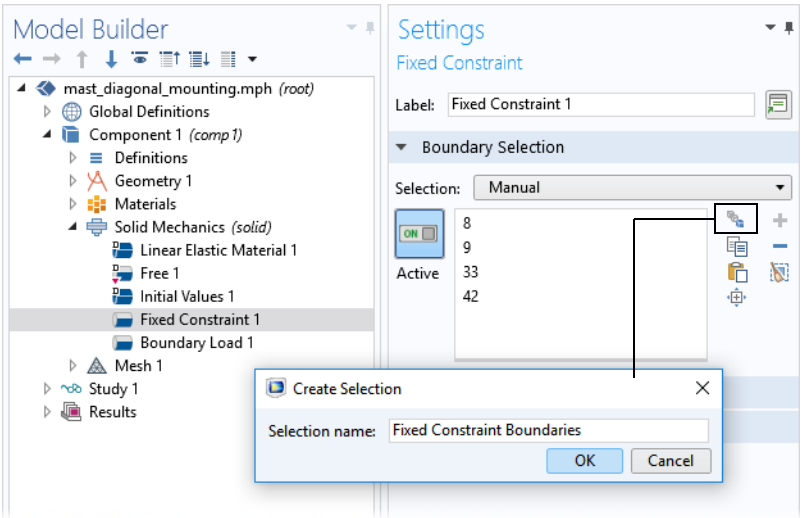

Figure 6-17: Creating a selection from the Settings window for a Fixed Constraint node.

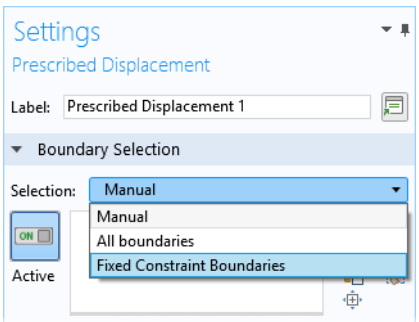

Figure 6-18: After creating these named selections, the Selection list displays the new name in the list, making it simple to choose it when adding additional boundary conditions such as a Prescribed Displacement node.

CREATE AN EXPLICIT SELECTION FROM THE SELECTION LIST WINDOW

Continue using the same model for this example, which demonstrates how to identify specific boundaries to add to a new Explicit selection:

1 In the **Model Builder**, click the **Component 1** node.

2 Open The Selection List Window. Right-click and select **Float** to detach the window from the COMSOL Desktop.

	The COMSOL Multiphysics software displays the geometric entities in the **Selection List** based on where in the model you are working. Other nodes can be clicked to display the list of geometric entities. For example, the **Materials**, **Solid Mechanics** (in this example), **Mesh**, and **Geometry** nodes. Experiment in the COMSOL Desktop by clicking on different nodes and observing the changes in the **Selection List** and **Graphics** windows.

3 In the **Graphics** window toolbar, click the **Select Boundaries** button ( ). The **Selection List** displays a list of all boundaries in the geometry. Click the **Select Domains**, **Select Edges**, or **Select Points** buttons in the **Graphics** window and observe how the list and the geometry changes based on the geometric entity level.

4 In the **Selection List** window, click to pick the boundaries you want to add to an **Explicit** selection:

- Click any individual boundary number in the list.
- Shift-click to select adjacent items in the list.
- Ctrl+click to select more than one boundary at a time.

To help you identify the boundary, the boundaries that you picked are highlighted in red in the **Graphics** window.

5 Once the boundaries are chosen, click the **Create Selection** button ( ) and enter a **Selection name** in the **Create Selection** window, for example, `Tube boundaries`. Click **OK** or press enter.

6 Go to the **Model Builder**. The new **Explicit** node (now named `Tube boundaries`) is added under **Definitions**.

HIDING THE SELECTED GEOMETRIC ENTITIES

To hide the selected geometric entities in the named selection nodes, right-click the node and choose **Hide Selection** ( ). To show the hidden selection again, right-click the node and select **Show Selection** ( ).

Copying and Pasting Selection Lists

Another way to create selections is to copy and paste existing lists of geometry objects or geometric entities. If, for example, you have a list of geometric entities (boundaries, for example) in a file or document, you can copy it to the clipboard and then use Ctrl+V to directly paste that list into a selection list in a **Settings** window. An example of this is a list of geometric entity numbers described as a step in a modeling instruction. In geometry sequences, you can also copy and paste selections that include geometry object and geometric entities that are part of such geometry objects.

You can also use the **Copy Selection** button ( ) and **Paste Selection** button ( ) if you have a list of geometric entities that you want to paste into a selection list. Clicking **Copy Selection** ( ) copies the current selection in that **Settings** window so that you can paste it into some other selection (for a compatibly geometry object or geometric entity level) in another **Settings** window. These buttons are available on many **Settings** windows as in Figure 6-16 and Figure 6-17 and in the **Selection List** window (except when in Geometry mode).

COPYING AND PASTING GEOMETRIC ENTITY INFORMATION INTO A SELECTION LIST

1 Prepare or copy the information to insert into the selection list. For example, copy a list of numbers from a text file or PDF file such as COMSOL model documentation (highlight and press Ctrl+C). Also copy a selection on any **Settings** window, (for example, the Fixed Constraint boundaries). Click the **Copy Selection** button ( ) and go to the next step.

2 Click the **Paste Selection** button ( ).

3 In the **Paste Selection** window, paste (press Ctrl+V) or enter the list of geometric entities into the **Selection** field. Data in the list or entered in the field can include commas, semicolons, colons, tabs, and spaces as separators (1,

3), ranges (10–34), and words (*and*). For geometry objects, you can also use colons to separate the object and its entities. For example, in a boundary selection, typing `cone1 1 4 arr1(2,1) 3 4 7` or, alternatively, `cone1: 1, 4; arr1(2,1): 3, 4, and 7`, both select boundaries 1 and 4 for the cone with the name `cone1` and boundaries 3, 4, and 7 for the array object `arr1(2,1)`. Click **OK** to paste the selection into the selection list.

Adjacent

An **Adjacent** ( ) selection outputs selections adjacent to specified geometric entities or selections. For example, select all domains adjacent to some boundaries or all boundaries adjacent to some domains.

	Two geometric entities that belong to different objects or different parts of an assembly are never adjacent.

The adjacent geometric entities can be of any type (domains, boundaries, edges, or points) regardless of the geometric entity level for the input selections. To add this node, right-click the **Definitions** node and choose **Selections>Adjacent**.

INPUT ENTITIES

Based on space dimension, select a **Geometric entity level** — **Domain**, **Boundary**, **Edge** (3D only), or **Point** for the selections to add or remove from the **Input selections** list and to create a selection of adjacent geometric entities. Click the **Add** button ( ) to open an **Add** dialog box that contains selections of the chosen geometric entity level that appear earlier in the geometry sequence. Use the **Move Up** ( ), **Move Down** ( ), and **Delete** ( ) buttons to organize the list.

OUTPUT ENTITIES

In the **Geometric entity level** list, choose the type of output entities: **Adjacent domains**, **Adjacent boundaries**, **Adjacent edges** (3D only), or **Adjacent points**. If the output entities have a lower dimension that the input entities, there are also two check boxes that you can use to select exterior and interior entities of the union of the input selections.

By default, only exterior entities are selected. For example, if the input selections are domains selections, and the output is adjacent boundaries, the **Exterior boundaries** (selected by default) and **Interior boundaries** check boxes display.

COLOR

In this section, choose a color from the **Color** list for use with this selection. See Selection Colors.

	• Creating Named Selections in the Geometry Sequence • Adjacent Selection (Geometry Sequences)

Ball

Another way to select 3D geometric entities is to define an enclosing **Ball** ( ) to select geometric entities that are completely or partially inside the ball. To add this node, right-click the **Definitions** node and choose **Selections>Ball**.

GEOMETRIC ENTITY LEVEL

Select the **Level** for the geometric entities: **Domain**, **Boundary**, **Edge**, or **Point**.

If **Boundary** or **Edge** is selected, also select the **Group by continuous tangent** check box to extend the selection to all adjacent faces or edges that have continuous tangents (an angle less than the value in the **Angular tolerance** field) at their junctions (to select all faces that make up a continuous sheet, for example).

When the **Group by continuous tangent** check box is selected, set the tolerance on the continuity condition in the **Angular tolerance** field as the maximum angle between two faces or edges that are considered as having continuous tangents (a value between 0 and 180 degrees; the default value is 5 degrees).

See **Output Entities** for details about how the behavior depends on the condition for which the selection considers the group of entities to be enclosed.

INPUT ENTITIES

The **Entities** list defaults to **All**, which bases the selection on all entities of the selected type.

Select **From selections** to base the selection on other defined selections. Then, in the **Selections** list, add the selections for which you want to create a selection of geometric entities from those selections that are located within the ball that you define for the resulting selection. Click the **Add** button ( ) to open an **Add** dialog box that contains selections of the chosen geometric entity level that appear earlier in the geometry sequence. Use the **Move Up** ( ), **Move Down** ( ), and **Delete** ( ) buttons to organize the list.

BALL CENTER

Position the center of the ball by entering the center position in the **x**, **y**, and **z** fields (the unit is the length unit for the geometry).

BALL RADIUS

Enter the radius for the ball in the **Radius** field. The default is 0.

OUTPUT ENTITIES

For the selections made under **Input Entities**, define the dimension of the ball and select the condition for the geometric entities to be selected. Choose an option from the **Include entity if** list: **Entity intersects ball** (the default), **Entity inside ball**, **Some vertex inside ball**, or **All vertices inside ball**.

- If **Entity intersects ball** is kept as the default, it includes all geometric entities that intersect the enclosing ball; that is, the selection includes all entities that are partially or completely inside the ball. If in addition the **Group by continuous tangent** check box is selected for a boundary or edge under the **Geometric Entity Level** section, all entities in each group are selected if any entity in the group intersects the ball.
- For **Entity inside ball** it includes all geometric entities that are completely inside the enclosing ball. If in addition the **Group by continuous tangent** check box is selected for a boundary or edge under the **Geometric Entity Level** section, the entities in each group are selected only if all entities in the group are completely inside the ball.
- For **Some vertex inside ball** it includes all geometric entities where at least some vertex is inside the enclosing ball. If in addition the **Group by continuous tangent** check box is selected for a boundary or edge under the **Geometric Entity Level** section, all entities in each group are selected if any entity in the group has at least some vertex inside the ball.
- For **All vertices inside ball** it includes all geometric entities where all vertices are inside the enclosing ball. If the **Group by continuous tangent** check box is selected for a boundary or edge under the **Geometric Entity Level** section, the entities in each group are selected only if all entities in the group have all vertices inside the ball. This

selection might differ slightly compared to when selecting **Entity inside ball** if the geometric entity is outside the ball at some points between the vertices.

	The Ball, Box, Cylinder, and `Disk` selections use the rendering mesh to determine which entities fit the selection condition. You can control the detail for the rendering in the **Preferences** dialog box (select **Graphics and Plot Windows** and then use the **Detail** list under **Visualization**).

COLOR

In this section, choose a color from the **Color** list for use with this selection. See Selection Colors.

	• Creating Named Selections in the Geometry Sequence • Ball Selection (Geometry Sequences)

Box

Another way to select geometric entities is to define an enclosing **Box** ( ) to select geometric entities that are completely or partially inside the box. To add this node, right-click the **Definitions** node and choose **Selections>Box**.

See Ball for the **Geometric Entity Level** and **Input Entities** settings.

BOX LIMITS

Define the dimensions of the box by entering the maximum and minimum values in all directions in the **x minimum**, **x maximum**, **y minimum**, **y maximum**, and (for 3D) **z minimum** and **z maximum** fields. The unit is the length unit for the geometry. The default is `–Inf` and `Inf` for the minimum and maximum values, respectively; that is, the box encloses the entire geometry. Use `–Inf` or `Inf` in some of these settings to make the box only partially bounded.

OUTPUT ENTITIES

For the selections made under **Input Entities**, define the dimension of the box and select the condition for the geometric entities to be selected. Choose an option from the **Include entity if** list: **Entity intersects box** (the default), **Entity inside box**, **Some vertex inside box**, or **All vertices inside box**.

See Ball for the settings. The only difference is that the settings are for a **Box** instead of a **Ball**.

COLOR

In this section, choose a color from the **Color** list for use with this selection. See Selection Colors.

	• Creating Named Selections in the Geometry Sequence • Box Selection (Geometry Sequences)

Cylinder

Another way to select 3D geometric entities is to define an enclosing solid or hollow **Cylinder** ( ) to select geometric entities that are completely or partially inside the cylinder. To add this node, right-click the **Definitions** node and choose **Selections>Cylinder**.

See Ball for the **Geometric Entity Level** and **Input Entities** settings.

SIZE AND SHAPE

Define the dimensions of the cylinder by entering the outer and inner radius and the positions of the upper and lower faces on the cylinder axis in the **Outer radius**, **Inner radius**, **Top distance**, and **Bottom distance** fields. The unit is the length unit for the geometry. The default is 0, 0, `Inf`, and `-Inf` for these settings, respectively. For a solid cylinder, leave the inner radius at 0. Making the inner and outer radius equal corresponds to a cylindrical surface. To define a sector of a full cylinder, use the **Start angle** (default: 0) and **End angle** (default: 360 degrees) fields. The selection includes entities that intersect or are contained in the cylinder sector (depending on the settings under **Output Entities** below).

POSITION

Position the cylinder by entering the center position in the **x**, **y**, and (for 3D) **z** fields. The default is 0 for all coordinates.

AXIS

Set the cylinder axis by choosing an **Axis type**: **z-axis** (the default), **x-axis**, **y-axis**, **Cartesian**, or **Spherical**. If **Cartesian** is selected, enter coordinates for **x**, **y**, and **z**. If **Spherical** is selected, enter angles for **theta** and **phi** (unit: deg).

OUTPUT ENTITIES

For the selections made under **Input Entities**, define the dimension of the cylinder and select the condition for the geometric entities to be selected. Choose an option from the **Include entity if** list: **Entity intersects cylinder** (the default), **Entity inside cylinder**, **Some vertex inside cylinder**, or **All vertices inside cylinder**.

See Ball for the settings. The only difference is that the settings are for a **Cylinder** instead of a **Ball**.

COLOR

In this section, choose a color from the **Color** list for use with this selection. See Selection Colors.

- Creating Named Selections in the Geometry Sequence
- Cylinder Selection (Geometry Sequences)

Disk

Another way to select 2D geometric entities is to define an enclosing **Disk** ( ) to select geometric entities that are completely or partially inside the disk. To add this node, right-click the **Definitions** node and choose **Selections>Disk**.

GEOMETRIC ENTITY LEVEL

Select the **Level** for the geometric entities: **Domain**, **Boundary**, or **Point**.

If **Boundary** is selected, also select the **Group by continuous tangent** check box to extend the selection to all adjacent boundaries that have continuous tangents (an angle less than the value in the **Angular tolerance** field) at their junctions.

When the **Group by continuous tangent** check box is selected, set the tolerance on the continuity condition in the **Angular tolerance** field as the maximum angle between two boundaries that are considered as having continuous tangents (a value between 0 and 180 degrees; the default value is 5 degrees).

See **Output Entities** for details about how the behavior depends on the condition for which the selection considers the group of entities to be enclosed.

INPUT ENTITIES

The **Entities** list defaults to **All**, which bases the selection on all entities of the selected type.

Select **From selections** to base the selection on other defined selections. Then, in the **Selections** list, add the selections for which you want to create a selection of geometric entities from those selections that are located within the disk that you define for the resulting selection. Click the **Add** button ( ) to open an **Add** dialog box that contains selections of the chosen geometric entity level that appear earlier in the geometry sequence. Use the **Move Up** ( ), **Move Down** ( ), and **Delete** ( ) buttons to organize the list.

DISK CENTER

Position the center of the disk by entering the center position in the **x**, and **y** fields (the unit is the length unit for the geometry).

SIZE AND SHAPE

Define the dimensions of the disk by entering the outer and inner radius in the **Outer radius** and **Inner radius** fields. The unit is the length unit for the geometry. For a solid disk, leave the inner radius at 0. To define a sector of a full disk, use the **Start angle** (default: 0) and **End angle** (default: 360 degrees) fields. The selection includes entities that intersect or are contained in the disk sector (depending on the settings under **Output Entities** below).

OUTPUT ENTITIES

For the selections made under **Input Entities**, define the dimension of the disk and select the condition for the geometric entities to be selected. Choose an option from the **Include entity if** list: **Entity intersects disk** (the default), **Entity inside disk**, **Some vertex inside disk**, or **All vertices inside disk**.

- If **Entity intersects disk** is kept as the default, it includes all geometric entities that intersect the enclosing disk; that is, the selection includes all entities that are partially or completely inside the disk. If in addition the **Group by continuous tangent** check box is selected for a boundary under the **Geometric Entity Level** section, all entities in each group are selected if any entity in the group intersects the disk.
- For **Entity inside disk** it includes all geometric entities that are completely inside the enclosing disk. If in addition the **Group by continuous tangent** check box is selected for a boundary under the **Geometric Entity Level** section, the entities in each group are selected only if all entities in the group are completely inside the disk.
- For **Some vertex inside disk** it includes all geometric entities where at least some vertex is inside the enclosing disk. If in addition the **Group by continuous tangent** check box is selected for a boundary under the **Geometric Entity Level** section, all entities in each group are selected if any entity in the group has at least some vertex inside the disk.
- For **All vertices inside disk** it includes all geometric entities where all vertices are inside the enclosing disk. If the **Group by continuous tangent** check box is selected for a boundary under the **Geometric Entity Level** section, the entities in each group are selected only if all entities in the group have all vertices inside the disk. This selection might differ slightly compared to when selecting **Entity inside disk** if the geometric entity is outside the disk at some points between the vertices.

COLOR

In this section, choose a color from the **Color** list for use with this selection. See Selection Colors.

- Creating Named Selections in the Geometry Sequence
- Disk Selection (Geometry Sequences)

Explicit

Use an **Explicit** node ( ) to create the selection using the selection tools for individual geometric entities (boundaries, for example) on the chosen geometric entity level. To add this node, right-click the **Definitions** node and choose **Selections>Explicit**.

INPUT ENTITIES

Based on space dimension, select a **Geometric entity level**: **Domain**, **Boundary**, **Edge**, or **Point** for the geometric entities to add or remove from the selection list.

Select and add geometric entities in the **Graphics** window, using other selection methods, or by selecting the **All domains**, **All boundaries**, **All edges**, or **All points** check box. The selected items are highlighted in the **Graphics** window. Selecting the check box for all geometric entities locks all entities of this type as selected even if the geometry changes.

If **Boundary** (for 2D and 3D models) or **Edge** is selected, also select the **Group by continuous tangent** check box to extend the selection to all adjacent faces or edges that have continuous tangents (an angle less than the value in the **Angular tolerance** field) at their junctions. This grouping makes it possible to select all faces that make up a continuous sheet, for example. When the **Group by continuous tangent** check box is selected, set the tolerance on the continuity condition in the **Angular tolerance** field as the maximum angle between two faces or edges that are considered as having continuous tangents (a value between 0 and 180 degrees; the default value is 5 degrees).

	To deselect one or some of the faces or edges that make up the group with continuous tangents, first clear the **Group by continuous tangent** check box.

OUTPUT ENTITIES

Define the geometry objects that the selection contains. The options available and defaults depend on the selection in the **Geometric entity level** list as well as the space dimension of the Component.

If **Domain** is the input the default output is the **Selected domains**.

- Select **Adjacent boundaries**, **Adjacent edges**, or **Adjacent points** to use the boundaries, edges, or points next to the selected domains as the selection output (available options depend on the space dimension of the Component). This makes it possible to, for example, make a selection of all boundaries around a domain by first selecting the domain.
- Depending on the selection output, choose to include **Exterior boundaries** (the default) or **Interior boundaries**; **Exterior edges** (the default) or **Interior edges**; or **Exterior points** (the default) or **Interior points**. Click to select or clear the check boxes as needed.

If **Boundary** or **Edge** are chosen as the input, the default output is the **Selected boundaries** or **Selected edges**, respectively. As with the **Domain** input, select other options as needed. The **Point** output is the same as the selection input (that is, the selected points).

	If a particular selection is used elsewhere in the model, including in other selections, it is not possible to change the output type, for example, from domains to boundaries.

COLOR

In this section, choose a color from the **Color** list for use with this selection. See Selection Colors.

	• Creating Named Selections in the Geometry Sequence • Explicit Selection (Geometry Sequences)

Union, Intersection, Difference, and Complement

Boolean selections — **Union** ( ), **Intersection** ( ), **Difference** ( ), and **Complement** ( ) — are useful to combine two or more selections (union), create a selection of overlapping geometric entities (intersection), create

selection of entities that are in one selection but not in another (difference), and to create a selection as the inverse (complement) of one or more selections (all boundaries except the inflow boundaries, for example). The complement can be convenient if a selection is needed that consists of all boundaries except one or a few. Then it is easier to first create a selection (just the one boundary, for example) and then use a **Complement** node to create its complement. All Boolean selection nodes' **Settings** windows have similar sections. To add this node, right-click the **Definitions** node and choose an option from the **Selections** menu.

GEOMETRIC ENTITY LEVEL

Based on space dimension, select a **Level** — **Domain**, **Boundary**, **Edge** (3D only), or **Point** for the selections to add or remove from the **Selections to add** (**Selections to intersect**, **Selections to subtract**, **Selections to invert**) list.

INPUT ENTITIES

Use the buttons in this section to move, add, or delete selections in the **Selections to add** (Union), **Selections to intersect** (Intersection), or **Selections to invert** (Complement) lists. For the **Difference** selection node also choose **Selections to subtract**. Click the **Add** button ( ) to open an **Add** dialog box that contains all existing selections for the same geometric entity level. Use the **Move Up** ( ), **Move Down** ( ), and **Delete** ( ) buttons to organize the list.

COLOR

In this section, choose a color from the **Color** list for use with this selection. See Selection Colors.

- Creating Named Selections in the Geometry Sequence
- Union Selection, Intersection Selection, Difference Selection, and Complement Selection (Geometry Sequences)

Creating Named Selections in the Geometry Sequence

You can also create selection nodes in the geometry sequence for user-defined named selections of all or a few of the geometric entities at a specific geometric entity level based on one or more of the nodes above the selection node in the geometry sequence. This way it is possible to make a selection that only includes a few of the geometric entities from one or more geometry objects and also create selections based on entire geometry objects. Using selections based on a geometry object makes it possible to track, for example, all boundaries in the final geometry that belong to that geometry object, even if its original boundaries are intersected by other geometry objects during a parametric sweep, for example. That is, the selection nodes in the **Geometry** branch can provide better associativity when changing or updating the geometry than the corresponding selection nodes under **Definitions**. See the following sections for details on the selection nodes in the geometry sequence, which you choose from the **Selections** submenu in the **Geometry** node's context menu.

- Working with Geometry Sequences
- Creating Named Selections

BUILDING SELECTION NODES

If the current node in the geometry sequence is before the node preceding the selection node or after the selection node, the selection is not visualized (because the selected object or entities might not be visible in this state). In this case, the **Build Preceding State** button appears instead of the selection list (this also applies for nonexplicit selections in some selection nodes if **From selections** is selected under **Input Entities**). To create a state in which the selection can be visualized, click **Build Preceding State** or click the **Build Selected** button ( ). To rebuild the entire geometry, click the **Build All Objects** button ( ).

CREATING SELECTIONS FROM GEOMETRIC PRIMITIVES AND OPERATIONS

For all geometric primitives in 3D, 2D, and 1D geometries — for example, blocks, spheres, squares, polygons, and intervals — as well as for all geometry operations — for example, union, intersection, fillet, array, and mirror — you can create selections for each type of geometric entity that the resulting geometry objects consist of. The following list shows the geometric entity types for geometry objects that are "solids":

- In 3D: domains, boundaries, edges, and points
- In 2D: domains, boundaries, and points
- In 1D: domains and points

To create these selections, click the geometry object node in the **Model Builder** and then select the **Resulting objects selection** check box in the **Settings** window's **Selections of Resulting Entities** section. The selections then become available with the name of the geometry node (**Block 1**, for example) in subsequent geometry nodes. To make the selections available in all applicable selection lists in the **Settings** windows for the physics nodes, material nodes, mesh nodes, and so on, select an option from the **Show in physics** (**Show in instances** if in a geometry part) list: **All levels**, to make the selection available for all geometric entity levels; **Domain selection** (the default for most nodes); **Boundary selection**; **Edge selection** (3D only); **Point selection**; or **Off**, if the selection should not be available outside of the geometry sequence. Not all entity levels are available for all geometric primitives and operations. There are no explicit Selection nodes for these selections. For example, for a 3D Component model with a single **Block** node, the **Selection** list contains the selection **Block 1**, which for a domain selection is the single domain, and for a boundary selection consists of the six faces of the block.

The Ball (3D and 2D), Box, and Cylinder (3D) selections are coordinate-based selections where you define the coordinates of a volume, area, or interval to create selections of entities enclosed by the part of the geometry defined by the selection.

HIDING THE SELECTED GEOMETRIC ENTITIES OR OBJECTS

To hide the selected geometric entities or geometry objects in the named selection nodes, right-click the node and choose **Hide Selection** ( ). To show the hidden selection again, right-click the node and select **Show Selection** ( ).

- Global Definitions and Geometry Parts
- Working with Geometry Sequences

TABLE 6-7: GEOMETRY NAMED SELECTIONS BY TYPE

ICON	TYPE	DESCRIPTION
	Adjacent Selection	Use this node to create the selection as the adjacent geometric entities (boundaries, for example) to one or more selections. See Adjacent Selection (Geometry Sequences).
	Ball Selection	Use this node to create the selection by enclosing part of the 3D geometry by a bounding ball (sphere) to select geometric entities that are partially or completely inside the ball. See Ball Selection (Geometry Sequences).
	Box Selection	Use this node to create the selection by enclosing part of the 3D geometry by a bounding box to select geometric entities that are partially or completely inside the box. See Box Selection (Geometry Sequences).
	Cylinder Selection	Use this node to create the selection by enclosing part of the 3D geometry by a bounding solid or hollow cylinder or cylinder section to select geometric entities that are partially or completely inside the cylinder. See Cylinder Selection (Geometry Sequences).
	Disk Selection	Use this node to create the selection by enclosing part of the 2D geometry by a bounding solid or hollow disk or disk section to select geometric entities that are partially or completely inside the disk. See Disk Selection (Geometry Sequences).

TABLE 6-7: GEOMETRY NAMED SELECTIONS BY TYPE

ICON	TYPE	DESCRIPTION
	Explicit Selection	Use this node to create the selection using the normal selection tools for individual geometric entities (boundaries, for example) on the geometric entity level chosen. See Explicit Selection (Geometry Sequences).
Union Selection, Intersection Selection, Difference Selection, and Complement Selection (Geometry Sequences)		
	Union Selection	Use this node to create the selection as the union (addition) of two or more selections.
	Intersection Selection	Use this node to create the selection as the intersection of two or more selections.
	Difference Selection	Use this node to create the selection as the difference between a set of one or more selections and another set of one or more selections.
	Complement Selection	Use this node to create the selection as the complement (inverse) of one or more selections.

Adjacent Selection (Geometry Sequences)

The **Adjacent Selection** ( ) node selects all entities of a given dimension that are adjacent to entities in a given set of selections (having another dimension). For example, it can select all boundaries adjacent to a given domain selection. To add this node, right-click the **Geometry** node and choose **Selections>Adjacent Selection**.

Two geometric entities that belong to different parts of an assembly are never adjacent.

See Adjacent for the **Input Entities** and **Output Entities** settings, which are the same.

RESULTING SELECTION

By default, the **Keep selection** check box is selected. Clear the check box if you do not want the resulting selection to be available as a named selection in other nodes in the geometry sequence or other parts of the model tree. If the **Keep selection** check box is selected, you can also determine if the selection should appear in applicable settings for physics, materials, and other parts of the model tree outside of the geometry using the **Show in physics** list (or **Show in instances** if the selection is in a geometry part; **Show in 3D** in a plane geometry under a work plane in a 3D component). If the geometric entity level is not set to **Object** (any of **Domain**, **Boundary**, **Edge**, or **Point**), choose **On** (the default) or **Off** to show the selection in physics and other settings or not. If the geometric entity level is **Object**, choose one of **All levels** (that is, all entity levels), **Object selection** (in geometry parts only), **Domain selection**, **Boundary selection**, **Edge selection** (3D only), **Point selection**, or **Off**. For **Show in physics**, **All levels** is the default; for **Show in instances**, **Object selection** is the default.

Cumulative Selection

From the **Contribute to** list, choose an option. In addition to available **Cumulative Selection** nodes, **None** is always available from the list. To create a new **Cumulative Selection**, click **New**. Enter a **Name** in the **New Cumulative Selection** window. Click **OK** or press enter. This new cumulative selection is now available from any **Contribute to** list for a geometry selection.

COLOR

In this section, choose a color from the **Color** list for use with this selection. See Selection Colors.

- Creating Named Selections
- Cumulative Selections
- Adjacent

Ball Selection (Geometry Sequences)

Another way to select geometry objects or geometric entities is to use an enclosing **Ball Selection** ( ) to select objects or entities that are completely or partially inside the ball in 3D. To add this node, right-click the **Geometry** node and choose **Selections>Ball Selection**.

See Ball for all settings. You can also choose **Object** as the **Level** under **Geometric Entity Level**.

RESULTING SELECTION

By default, the **Keep selection** check box is selected. Clear the check box if you do not want the resulting selection to be available as a named selection in other nodes in the geometry sequence or other parts of the model tree. If the **Keep selection** check box is selected, you can also determine if the selection should appear in applicable settings for physics, materials, and other parts of the model tree outside of the geometry using the **Show in physics** list (or **Show in instances** if the selection is in a geometry part; **Show in 3D** in a plane geometry under a work plane in a 3D component). If the geometric entity level is not set to **Object** (any of **Domain**, **Boundary**, **Edge**, or **Point**), choose **On** (the default) or **Off** to show the selection in physics and other settings or not. If the geometric entity level is **Object**, choose one of **All levels** (that is, all entity levels), **Object selection** (in geometry parts only), **Domain selection**, **Boundary selection**, **Edge selection** (3D only), **Point selection**, or **Off**. For **Show in physics**, **All levels** is the default; for **Show in instances**, **Object selection** is the default.

Cumulative Selection

From the **Contribute to** list, choose an option. In addition to available **Cumulative Selection** nodes, **None** is always available from the list. To create a new **Cumulative Selection**, click **New**. Enter a **Name** in the **New Cumulative Selection** window. Click **OK** or press enter. This new cumulative selection is now available from any **Contribute to** list for a geometry selection.

COLOR

In this section, choose a color from the **Color** list for use with this selection. See Selection Colors.

- Creating Named Selections
- Cumulative Selections
- Ball, Box, and Cylinder

Box Selection (Geometry Sequences)

Another way to select geometry objects or geometric entities is to use an enclosing **Box Selection** ( ) to select objects or entities that are completely or partially inside the box (in 3D), rectangle (in 2D), or interval (in 1D). To add this node, right-click the **Geometry** node and choose **Selections>Box Selection**.

See Ball for the **Geometric Entity Level**, **Input Entities** and **Output Entities** settings. See Box for the **Box Limits** settings.

- You can also choose **Object** as the **Level** under **Geometric Entity Level**.
- For the **Output Entities** settings, note that the settings are for a **Box** instead of a **Ball**.

RESULTING SELECTION

By default, the **Keep selection** check box is selected. Clear the check box if you do not want the resulting selection to be available as a named selection in other nodes in the geometry sequence or other parts of the model tree. If the **Keep selection** check box is selected, you can also determine if the selection should appear in applicable settings for physics, materials, and other parts of the model tree outside of the geometry using the **Show in physics** list (or **Show in instances** if the selection is in a geometry part; **Show in 3D** in a plane geometry under a work plane in a 3D component). If the geometric entity level is not set to **Object** (any of **Domain**, **Boundary**, **Edge**, or **Point**), choose **On** (the default) or **Off** to show the selection in physics and other settings or not. If the geometric entity level is **Object**, choose one of **All levels** (that is, all entity levels), **Object selection** (in geometry parts only), **Domain selection**, **Boundary selection**, **Edge selection** (3D only), **Point selection**, or **Off**. For **Show in physics**, **All levels** is the default; for **Show in instances**, **Object selection** is the default.

Cumulative Selection

From the **Contribute to** list, choose an option. In addition to available **Cumulative Selection** nodes, **None** is always available from the list. To create a new **Cumulative Selection**, click **New**. Enter a **Name** in the **New Cumulative Selection** window. Click **OK** or press enter. This new cumulative selection is now available from any **Contribute to** list for a geometry selection.

COLOR

In this section, choose a color from the **Color** list for use with this selection. See Selection Colors.

- Creating Named Selections
- Cumulative Selections
- Ball, Box, and Cylinder

Cylinder Selection (Geometry Sequences)

Another way to select geometry objects or geometric entities is to use an enclosing **Cylinder Selection** ( ) to select objects or entities that are completely or partially inside the cylinder (in 3D only). To add this node, right-click the **Geometry** node and choose an option from the **Selections** menu.

See Ball for the **Input Entities** and **Output Entities** settings. See Cylinder for the **Size and Shape**, **Position**, and **Axis** settings.

- You can also choose **Object** as the **Level** under **Geometric Entity Level**.
- For the **Output Entities** settings, note that the settings are for a **Cylinder** instead of a **Ball**.

GEOMETRIC ENTITY LEVEL

Select the **Level** for the geometric entities: **Domain**, **Boundary**, **Edge**, or **Point**.

RESULTING SELECTION

By default, the **Keep selection** check box is selected. Clear the check box if you do not want the resulting selection to be available as a named selection in other nodes in the geometry sequence or other parts of the model tree. If the **Keep selection** check box is selected, you can also determine if the selection should appear in applicable settings for physics, materials, and other parts of the model tree outside of the geometry using the **Show in physics** list (or **Show in instances** if the selection is in a geometry part). If the geometric entity level is not set to **Object** (any of **Domain**, **Boundary**, **Edge**, or **Point**), choose **On** (the default) or **Off** to show the selection in physics and other settings or not. If the geometric entity level is **Object**, choose one of **All levels** (that is, all entity levels), **Object selection** (in geometry parts only), **Domain selection**, **Boundary selection**, **Edge selection** (3D only), **Point selection**, or **Off**. For **Show in physics**, **All levels** is the default; for **Show in instances**, **Object selection** is the default.

Cumulative Selection

From the **Contribute to** list, choose an option. In addition to available **Cumulative Selection** nodes, **None** is always available from the list. To create a new **Cumulative Selection**, click **New**. Enter a **Name** in the **New Cumulative Selection** window. Click **OK** or press enter. This new cumulative selection is now available from any **Contribute to** list for a geometry selection.

COLOR

In this section, choose a color from the **Color** list for use with this selection. See Selection Colors.

- Creating Named Selections
- Cumulative Selections
- Cylinder

Disk Selection (Geometry Sequences)

Another way to select geometry objects or geometric entities is to use an enclosing **Disk Selection** ( ) to select objects or entities that are completely or partially inside a disk in 2D. To add this node, right-click the **Geometry** node and choose **Selections>Disk Selection**.

See Disk for all settings. You can also choose **Object** as the **Level** under **Geometric Entity Level**.

RESULTING SELECTION

By default, the **Keep selection** check box is selected. Clear the check box if you do not want the resulting selection to be available as a named selection in other nodes in the geometry sequence or other parts of the model tree. If the **Keep selection** check box is selected, you can also determine if the selection should appear in applicable settings for physics, materials, and other parts of the model tree outside of the geometry using the **Show in physics** list (or **Show in instances** if the selection is in a geometry part; **Show in 3D** in a plane geometry under a work plane in a 3D component). If the geometric entity level is not set to **Object** (any of **Domain**, **Boundary**, or **Point**), choose **On** (the default) or **Off** to show the selection in physics and other settings or not. If the geometric entity level is **Object**, choose one of **All levels** (that is, all entity levels), **Object selection** (in geometry parts only), **Domain selection**, **Boundary selection**, **Point selection**, or **Off**. For **Show in physics**, **All levels** is the default; for **Show in instances**, **Object selection** is the default.

Cumulative Selection

From the **Contribute to** list, choose an option. In addition to available **Cumulative Selection** nodes, **None** is always available from the list. To create a new **Cumulative Selection**, click **New**. Enter a **Name** in the **New Cumulative Selection** window. Click **OK** or press enter. This new cumulative selection is now available from any **Contribute to** list for a geometry selection.

- Creating Named Selections
- Cumulative Selections
- Disk, Box, and Cylinder

Explicit Selection (Geometry Sequences)

Use an **Explicit Selection** node ( ) to create the selection using the selection tools for individual geometry objects or geometric entities (boundaries, for example). To add this node, right-click the **Geometry** node and choose **Selections>Explicit Selection**.

ENTITIES TO SELECT

Based on space dimension, select a **Geometric entity level**: **Object**, **Domain**, **Boundary**, **Edge**, or **Point** for the geometry objects or entities to add to the selection list.

Select and add geometric entities in the **Graphics** window or using other selection methods. The selected items are highlighted in the **Graphics** window.

If **Boundary** (for 2D and 3D models) or **Edge** is selected, also select the **Group by continuous tangent** check box to extend the selection to all adjacent faces or edges that have continuous tangents (an angle less than the value in the **Angular tolerance** field) at their junctions to select all faces that make up a continuous sheet, for example. When the **Group by continuous tangent** check box is selected, set the tolerance on the continuity condition in the **Angular tolerance** field as the maximum angle between two faces or edges that are considered as having continuous tangents (a value between 0 and 180 degrees; the default value is 5 degrees).

!	If a particular selection is used elsewhere in the model, including in other selections, it is not possible to change the geometric entity level, for example, from domains to boundaries.

	To deselect one or some of the faces or edges that make up the group with continuous tangents, first clear the **Group by continuous tangent** check box.

RESULTING SELECTION

By default, the **Keep selection** check box is selected. Clear the check box if you do not want the resulting selection to be available as a named selection in other nodes in the geometry sequence or other parts of the model tree. If the **Keep selection** check box is selected, you can also determine if the selection should appear in applicable settings for physics, materials, and other parts of the model tree outside of the geometry using the **Show in physics** list (or **Show in instances** if the selection is in a geometry part; **Show in 3D** in a plane geometry under a work plane in a 3D component). If the geometric entity level is not set to **Object** (any of **Domain**, **Boundary**, **Edge**, or **Point**), choose **On** (the default) or **Off** to show the selection in physics and other settings or not. If the geometric entity level is **Object**, choose one of **All levels** (that is, all entity levels), **Object selection** (in geometry parts only), **Domain selection**, **Boundary selection**, **Edge selection** (3D only), **Point selection**, or **Off**. For **Show in physics**, **All levels** is the default; for **Show in instances**, **Object selection** is the default.

Cumulative Selection

From the **Contribute to** list, choose an option. In addition to available **Cumulative Selection** nodes, **None** is always available from the list. To create a new **Cumulative Selection**, click **New**. Enter a **Name** in the **New Cumulative Selection** window. Click **OK** or press enter. This new cumulative selection is now available from any **Contribute to** list for a geometry selection.

COLOR

In this section, choose a color from the **Color** list for use with this selection. See Selection Colors.

	• Creating Named Selections • Cumulative Selections • Explicit

Union Selection, Intersection Selection, Difference Selection, and Complement Selection (Geometry Sequences)

Boolean selections — **Union Selection** ( ), **Intersection Selection** ( ), **Difference Selection** ( ), and **Complement Selection** ( ) — are useful to combine two or more selections (union), create a selection of entities that are common to the input selections (intersections), create selection of entities that are in one selection but not in another (difference), and to create a selection as the complement (inverse) of one or more selections (all boundaries except the inflow boundaries, for example). The complement can be convenient if a selection is needed that consists of all boundaries except one or a few. Then it is easier to first create a selection (just the one boundary, for example) and then use a **Complement** node to create its complement. All Boolean selection nodes' **Settings** windows have similar sections. To add this node, right-click the **Geometry** node and choose an option from the **Selections** menu.

GEOMETRIC ENTITY LEVEL

Based on space dimension, select a **Level** — **Object**, **Domain**, **Boundary**, **Edge** (3D only), or **Point** for the selections to add or remove from the **Selections to add** (**Selections to intersect**, **Selections to subtract**, and **Selections to invert**) list.

INPUT ENTITIES

Use the buttons in this section to move, add, or delete selections in the **Selections to add** (Union), **Selections to intersect** (Intersection), or **Selections to invert** (Complement) lists. For the **Difference** selection node, also choose **Selections to subtract**. Click the **Add** button ( ) to open an **Add** dialog box that contains all existing selections for the same geometric entity level. Use the **Move Up** ( ), **Move Down** ( ), and **Delete** ( ) buttons to organize the list.

RESULTING SELECTION

By default, the **Keep selection** check box is selected. Clear the check box if you do not want the resulting selection to be available as a named selection in other nodes in the geometry sequence or other parts of the model tree. If the **Keep selection** check box is selected, you can also determine if the selection should appear in applicable settings for physics, materials, and other parts of the model tree outside of the geometry using the **Show in physics** list (or **Show in instances** if the selection is in a geometry part; **Show in 3D** in a plane geometry under a work plane in a 3D component). If the geometric entity level is not set to **Object** (any of **Domain**, **Boundary**, **Edge**, or **Point**), choose **On** (the default) or **Off** to show the selection in physics and other settings or not. If the geometric entity level is **Object**, choose one of **All levels** (that is, all entity levels), **Object selection** (in geometry parts only), **Domain selection**, **Boundary selection**, **Edge selection** (3D only), **Point selection**, or **Off**. For **Show in physics**, **All levels** is the default; for **Show in instances**, **Object selection** is the default.

Cumulative Selection

From the **Contribute to** list, choose an option. In addition to available **Cumulative Selection** nodes, **None** is always available from the list. To create a new **Cumulative Selection**, click **New**. Enter a **Name** in the **New Cumulative Selection** window. Click **OK** or press enter. This new cumulative selection is now available from any **Contribute to** list for a geometry selection.

COLOR

In this section, choose a color from the **Color** list for use with this selection. See Selection Colors.

- Creating Named Selections
- Cumulative Selections
- Union, Intersection, Difference, and Complement

Cumulative Selections

A *cumulative selection* is a selection in the geometry sequence that is a union of contributions from other selections. Cumulative selections are especially useful to construct a selection that has different definitions in different branches of an If clause. You can also use them as an alternative to a Union Selection node. **Cumulative Selection** nodes ( ) for each cumulative selection appear under **Cumulative Selections** ( ) at the bottom of the geometry sequence under **Geometry**. For example, a Circle node creates four associated cumulative selections, which all have the same label (for example, Cumulative Selection 1). They appear with different labels under **Cumulative Selections**: **Cumulative Selection 1 (Object)**, **Cumulative Selection 1 (Domain)**, **Cumulative Selection 1 (Boundary)**, and **Cumulative Selection 1 (Point)**. However, when you use the **Contribute to** list in a selection node, for example, only one **Cumulative Selection** node is created for the geometric entity level for that selection. When you select a **Cumulative Selection** node, the corresponding geometry objects or geometric entities appear in yellow in the **Graphics** window.

In the **Settings** window for **Cumulative Selection** nodes, you can rename a cumulative selection using the **Label** field. All **Cumulative Selection** nodes except those for the **Object** level also include the following section:

RESULTING SELECTION

Select the **Show in physics** check box (the **Show in instances** check box in geometry parts; **Show in 3D** in a plane geometry under a work plane in a 3D component) to make the cumulative selection available in physics, materials, and other applicable settings outside of the geometry sequence. This check box is selected by default.

CONTRIBUTING TO CUMULATIVE SELECTIONS

For a selection geometry feature, you can let it contribute to an existing cumulative selection by choosing an existing cumulative selection in the **Contribute to** list in its **Resulting Selection** section. To let it contribute to a new cumulative selection, click the **New** button.

For a geometry feature that has a **Selections of Resulting Entities** section in its **Settings** window, you can similarly let the resulting entities contribute to a cumulative selection by choosing an existing cumulative selection in the **Contribute to** list or clicking the **New** button.

You can also create a new cumulative selection by right-clicking the **Cumulative Selections** node and select **Cumulative Selection**. New **Cumulative Selection** nodes then appear.

To remove a contribution to a cumulative selection, select **None** in the **Contribute to** list.

To remove a cumulative selection, right-click any **Cumulative Selection** node that belongs to that cumulative selection and select **Delete** ( ). You can also right-click the main **Cumulative Selections** node and select **Delete Unused Selections** ( ) to delete all cumulative selections that are not used.

User-Defined Views

Views provide the camera setting, grid, rendering, arrows, lighting, and transparency in the **Graphics** window. You can create and use several user-defined views to highlight and display the geometry in different ways. By default a **View** node is added to all space dimensions, except for 0D components. For any dimension, also right-click the **View** node to add Hide for Geometry nodes.

For 1D, 1D axisymmetric, 2D, and 2D axisymmetric models, an **Axis** ( ) subnode is also added where you can set the axis coordinates and manual spacing. The **View** nodes and subnodes have information about a view, and you can also control the settings to display or hide geometry labels, direction arrows, and lock the axis. See Axis (2D and 2D Axisymmetric), Axis (1D and 1D Axisymmetric), and View (1D and 2D).

For 3D models, a **Camera** subnode ( ) and three **Directional Light** nodes ( ), including default settings, are also added. The **View** node and subnodes have information about a view. The settings include (in addition to, for example, settings for displaying geometry labels and direction arrows) transparency, lighting sources, lighting attributes, and camera settings. See View (3D).

	To display the **Views** node ( ) under **Results** ( ), click the **Show More Options** button ( ) and select **Views** in the **Show More Options** dialog box. You can then right-click that node to add extra 2D **View** ( ) and 3D **View** ( ) nodes. This can be useful, for example, when 2D axisymmetric revolved plots or 2D cut plane plots for 3D models are created or when you want to view the result plots showing the entire geometry and some zoomed-in part. The **View** node ( ) also appears when you add a new view from the plot settings in 2D or 3D plot groups.

	Right-click **Definitions** ( ) and select **View** to create additional **View** nodes and then experiment by switching views to find the best way to illustrate a model. Views can be selected from the list of views ( ) in the **Graphics** window toolbar. To reset the **View** node settings and its subnodes to the defaults, right-click **View** and select **Reset to Default** ( ).

View (1D and 2D)

For 1D, 1D axisymmetric, 2D, and 2D axisymmetric components, the **View** node ( ) controls the settings to display or hide labels, grid, and other parts of the view and to lock the axis. An **Axis** node is added by default. You can add this **View** node by right-clicking **Definitions** in a 1D or 2D component and also by right-clicking **Views** under **Results** to add a **View 2D** node.

Also right-click the **View** node in the component to add Hide for Geometry, Hide for Physics, or Hide for Mesh Import, depending on your current view, to hide some parts of the geometry in the view. You can also right-click any selection node to hide or show its selected geometric entities. To add additional **View** nodes, in the **Model Builder**, right-click **Definitions** and select **View**. You can also right-click a **View** node to copy or duplicate it. Right-click the **Definitions** or **Views** container node above the **View** nodes to paste a copied **View** node.

VIEW

Select the **Show geometry labels** check box to display the geometry object labels and the geometric entity labels (numbering) in the **Graphics** window. The labels appear for geometry objects or geometric entities (domain, boundary, edge, or point numbers), depending on what part of the model tree you display and the selection mode you are using.

Select the **Show edge direction arrows** check box to display the direction arrows on boundaries (edges) in the **Graphics** window. The direction arrows indicate the directions in which the boundary parameterization's value increases.

The **Show grid** check box (available in 2D) is selected by default. Clear it to remove the grid for the view in the Graphics window.

The **Mesh rendering** check box (available in 2D) is selected by default. Clear it to not plot the mesh in the mesh mode only, so there may not be an immediate effect when you select or clear this check box. This check box is not available in work-plane views, geometry part views, and result views.

Clear the **Show axis units** check box if you do not want to include units for the plot axes.

Select the **Lock axis** check box to store the current axis limits so that, for example, the zoom tools can be temporarily used. By revisiting the **View** node you can then restore the axis limits to the values in the view at the time the **Lock axis** check box is selected.

COLORS (2D ONLY)

Clear the **Show selection colors** check box if you do not want to include colors indicating user-defined selections.

Select the **Show material colors and texture** check box if you want to include colors and texture indicating the material used in the geometry.

	• View Toolbar • Axis (2D and 2D Axisymmetric) • Axis (1D and 1D Axisymmetric) • View (3D)

Axis (2D and 2D Axisymmetric)

For 2D and 2D axisymmetric components, the **View** node has an **Axis** ( ) subnode where you specify axis limits and grid spacing, and control the view scale (aspect ratio) for the plots.

	• View Toolbar • View (1D and 2D) • View (3D) • Axis (1D and 1D Axisymmetric)

AXIS

Enter **x minimum**, **x maximum**, **y minimum**, and **y maximum** values for the axis limits.

The default setting in the **View scale** list is **None**, which makes the increments equal in the *x* and *y* directions. Select **Automatic** to make the geometry fill the graphics window with unequal increments. This can be useful when working with thin and slender geometries. Select **Manual** to specify the view scale in the **x scale** and **y scale** text fields. Equal values, such as 1, make the geometries appear with the correct aspect ratio. The default values represent the view scale of the previous setting in the **View scale** list.

GRID

Select the **Manual spacing** check box and enter **x spacing** and **y spacing** values to control the grid spacing manually. Enter **Extra x** and **Extra y** values directly or click the **Range** button ( ) as needed.

	The default precision for the 2D grid axes labels is four digits. You can change the precision in The Preferences Dialog Box, using the **2D axis** field under **Display format (maximum number of digits)** on the **Graphics and Plot Windows** page.

Axis (1D and 1D Axisymmetric)

For 1D and 1D axisymmetric, the **View** node has an **Axis** ( ) subnode where you specify axis limits and grid spacing, and control the view scale (aspect ratio) for the plots.

AXIS

Enter **x minimum** and **x maximum** values for the axis limits.

GRID

Select the **Manual spacing** check box and enter an **x spacing** value to control the grid spacing manually. Enter an **Extra x** value directly or click the **Range** button ( ) as needed.

	• View Toolbar • View (1D and 2D) • View (3D) • Axis (2D and 2D Axisymmetric)

View (3D)

The **View** node ( ) for 3D components has many options to add light sources and define the light attributes. Other functions include displaying or hiding geometry labels, transparency, wireframe rendering, a numbered grid, and axis orientation in the **Graphics** window. See Figure 6-19. You can add this **View** node by right-clicking **Definitions** in a 3D component and also by right-clicking **Views** under **Results** to add a **View 3D** node.

Also right-click the **View** node in the component to add Hide for Geometry, Hide for Physics, or Hide for Mesh Import, depending on your current view.

	• View Toolbar • User-Defined Views • View (1D and 2D) • About the 3D View Light Sources and Attributes

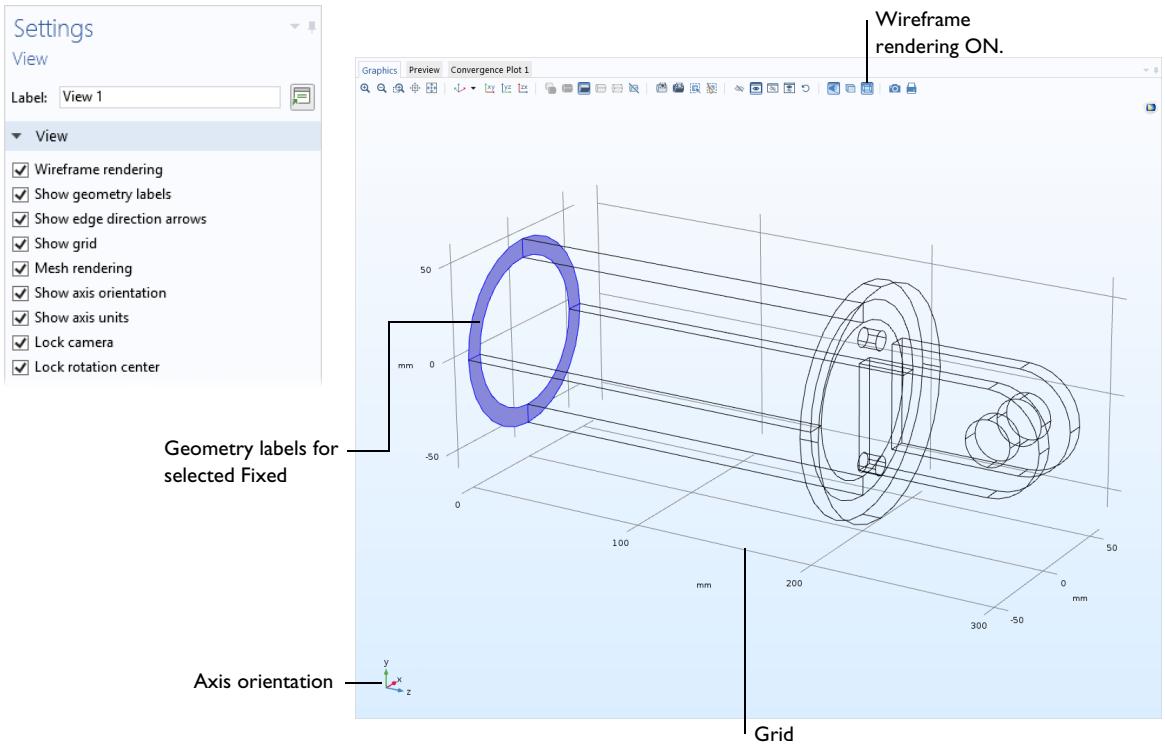

Figure 6-19: An example of the top of the 3D Settings window for View with all View option check boxes selected. The Graphics window shows what the check boxes represent. In this example, using the Diagonal Mounting Detail of a Communication Mast model, the Fixed Constraint node is clicked in the Model Builder, which then displays the numbers associated to the boundaries (8, 9, 33, and 42). Compare to the boundary numbers shown in Figure 6-17*, which is for the same node. The edge direction arrows are not displayed in this view.*

Also right-click the **View** node in the component to add Hide for Geometry, Hide for Physics, or Hide for Mesh Import, depending on your current view.

The **View** node ( ) for 3D models has the following sections:

VIEW

Select the **Wireframe rendering** check box to view the edges of the object as solid lines. The **Wireframe Rendering** button ( ) is turned on or off in the **Graphics** window at the same time. Wireframe rendering only has effect when mesh rendering is turned off (for a view that normally shows the mesh).

Select the **Show geometry labels** check box to display the geometry object names in the **Graphics** window. The labels appear for geometry objects or geometric entities (boundary, edge, or point numbers, but not domain numbers), depending on what part of the model tree you display and the selection mode you are using. If you use wireframe rendering, no labels appear.

Select the **Show edge direction arrows** check box to display direction arrows on edges in the **Graphics** window. The direction arrows indicate the directions for which the edge parameterization values increase.

By default, the **Show grid** check box is selected and displays a numbered grid in the **Graphics** window around the object. Click to clear the check box to hide the grid.

By default, the **Mesh rendering** check box is selected. Clear it to not render the mesh, where the mesh normally appears, which can be useful, for example, to get a better view of the inside of complex meshed 3D geometries. This check box is not available in geometry part views and result views.

By default, the **Show axis orientation** check box is selected and the axis orientation indicator for the global Cartesian coordinate directions is displayed in the lower-left corner of the **Graphics** window. Click to clear the check box to hide the axis orientation indicator.

By default, the **Show axis units** check box is selected. Click to clear the **Show axis units** check box if you do not want to include units for the plot axes.

Select the **Lock camera** check box to store the current camera settings so that the zoom tools can temporarily be used, for example, but then revisiting the **View** node restores the camera settings to the values in the view at the time the **Lock camera** check box was selected.

Select the **Lock rotation center** check box to lock the rotation center and turn off the automatic or manual rotation center modes. See Moving Around and Rotating a 3D Geometry.

LIGHT

The **Scene light** setting is a default that always displays and is based on the geometry. The **Scene light**, **Diffuse light**, **Specular light**, and **Ambient light** check boxes are selected by default. To hide and disable all light sources, click to clear the **Scene light** check box. The **Scene Light** button ( ) is turned on or off in the **Graphics** window at the same time.

- Click to clear the **Diffuse light**, **Specular light**, and **Ambient light** check boxes as needed.
- Enter a value between 0 and 1 for the **Ambient intensity** (default value: 0.3) or use the slider to select a level. Watch the changes in the **Graphics** window at the same time to help choose a level.
- Select a **Color** from the list: **Custom**, **Black**, **Blue**, **Cyan**, **Gray**, **Green**, **Magenta**, **Red**, **White** (default), or **Yellow**. The color is only applied to ambient light. If you select **Custom**, click the **Color** button to choose a color from the **Custom color** palette.

TRANSPARENCY

Select the **Transparency** check box to turn on transparency. The **Transparency** button ( ) is activated in the **Graphics** window at the same time. Enter a value between 0 and 1 in the **Alpha** field for the alpha blending, where 0 means a fully transparent color and 1 means a fully opaque color, or use the slider to select a transparency level. Watch the changes in the **Graphics** window at the same time to help choose a level.

COLORS

Clear the **Show selection colors** check box if you do not want to include colors indicating user-defined selections.

Select the **Show material colors and texture** check box if you want to include colors and texture indicating the material used in the geometry.

Camera

Use the **Camera** node ( ) to orient the camera view in 3D models. In the **Model Builder**, under **Definitions** click to expand the **View** node where you want to define the camera position. A **Camera** node is added by default.

	Units wherever applicable (in the settings for position, target, and center of rotation, for example) follow the unit system specified in the root node's settings.

CAMERA

From the **Projection** list, select **Perspective** (the default) or **Orthographic** (parallel) as needed. The perspective projection shows distant objects as smaller to provide a realistic 3D projection, whereas the orthographic projection

shows all objects using their actual size regardless of the distance. You can also control the projection using the **Orthographic Projection** button ( ) on the **Graphics** window toolbar.

Enter a **Zoom angle** (in degrees) or use the **Zoom** buttons in the **Graphics** window toolbar.

The default setting in the **View scale** list is **None**, which makes the increments equal in all directions.

Select **Automatic** to make the geometry fill the graphics window with unequal increments. This can be useful when working with thin and slender geometries. By default, the automatic scaling is isotropic (a cube), which corresponds to **Isotropic** selected in the **Automatic** list. Select **Anisotropic** to define an anisotropic automatic scaling (a block) using different relative weights in the x, y, and z directions, which you enter in the **x weight**, **y weight**, and **z weight** fields. If you want the view scale to update every time the view changes, select the **Automatic update** check box.

Select **Manual** to specify the view scale in the **x scale**, **y scale**, and **z scale** text fields. Equal values, such as 1, make the geometries appear with the correct aspect ratio. The default values represent the view scale of the previous setting in the **View scale** list.

POSITION

In the **Graphics** window, click and hold the mouse to orient the geometry on the axes, or enter **x, y**, and **z** coordinates.

TARGET

In the **Graphics** window, click and hold the mouse to orient the geometry on the axes. The corresponding coordinates are displayed in the **Settings** window under the **Position**, **Target**, and **Up Vector** sections, or enter **x, y**, and **z** coordinates for the camera target location.

The **Position** is the location of the camera and the **Target** default is 1 length unit in front of the camera position.

UP VECTOR

In the **Graphics** window (or other plot windows), click and hold the mouse to orient the geometry on the axes, or enter **x, y**, and **z** coordinates for the camera's up vector, which determines which direction is up in the plot window.

CENTER OF ROTATION

By default, the values in the **Center of Rotation** section define the center of the geometry in the view. To control the center of rotation explicitly, enter a center location in the **x**, **y**, and **z** fields and then click the **Update** button ( ) at the top of the **Settings** window.

VIEW OFFSET

Right-click the mouse and move the geometry left, right, up, or down as needed. This shift operation moves the currently visible frame on the image plane. The corresponding dimensionless values that display in the **Settings** window under **View Offset** are relative to the image width and height, respectively. For example, an offset of $x = 0.5$ moves the projection 0.5 screen widths to the left. Alternatively, enter **x** and **y** values for the view offset.

The value in the **Orthographic scale** field defines the size in scene length of the viewing block along the longest side of the canvas. If the view's camera setting uses orthotropic projection, zoom in or out by increasing or decreasing the value of the orthographic scale. For a perspective projection this setting has no effect.

GRID

Select the **Manual spacing** check box and enter **x spacing**, **y spacing**, and **z spacing** values to control the grid spacing manually. Enter **Extra x**, **Extra y**, and **Extra z** values directly or click the **Range** button ( ) as needed.

	The default precision for the 3D grid axes labels is three digits. You can change the precision in The Preferences Dialog Box, using the **3D axis** field under **Display format (maximum number of digits)** on the **Graphics and Plot Windows** page.

About the 3D View Light Sources and Attributes

Light sources are the **Directional Light**, **Point Light**, **Spotlight**, or **Headlight** nodes. *Light attributes* are the scene light components, which include diffuse, specular, and ambient light (see Figure 6-20). Combined, these attribute and source settings enable the software to render the 3D model to look realistic.

LIGHT ATTRIBUTES

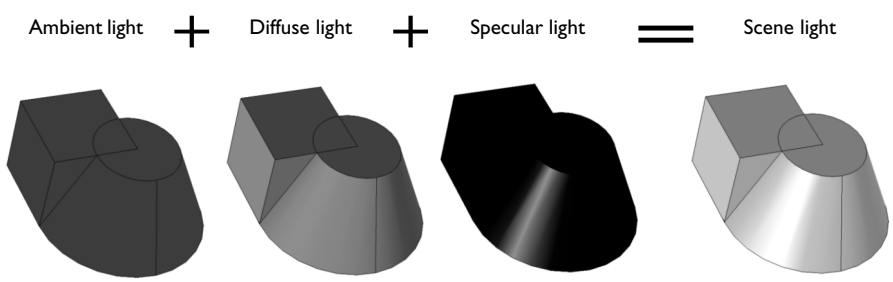

Figure 6-20: Scene light is a combination of ambient, diffuse, and specular light attributes. The default Scene light color is white and in this example the attributes display as different shades of black and gray. The Scene light is further enhanced using the various light source nodes.

Scene Light

For all geometry, scene light is applied by default and is a combination of the different light attributes. The light intensity and ambient intensity levels are also attributes of the scene light. The diffuse, specular, and ambient light attributes can be turned on or off by selecting or clearing the corresponding check boxes (see View (3D)). The intensity levels are adjusted either with a slider or by entering a number between 0 and 1.

Think of **Scene light** as ambient light, the base amount of light, plus specular light to add depth to curves and diffuse light to soften the lighting and add contrast. See Figure 6-20 for examples of the attributes:

- **Ambient light** is the available light surrounding the geometry. By itself, ambient light makes a 3D object look like a 2D object. The addition of diffuse and specular light adds the contrast and depth needed to define 3D geometry.
- **Diffuse light** is directional and spreads out over the object, like a flashlight shining on a sphere. This generally adds contrast and depth of field to 3D objects.
- **Specular light** is directional and reflects off the surface of a sphere or curve in a geometry. It is based on the angle between the viewer and the light source.

Apply the different sources of light (**Directional Light**, **Point Light**, **Spotlight**, or **Headlight** nodes) to further enhance how the geometry displays.

	For 3D models, you can also add these light source nodes — **Directional Light** ( ), **Point Light** ( ), **Spotlight** ( ), and **Headlight** ( ) — to adjust how the color and shading displays in the Graphics window. Each View can have a maximum of eight light sources (nodes) in any combination. See Directional Light, Point Light, Spotlight, and Headlight below.

Each light source has a unique light marker displayed in the Graphics window. Figure 6-22 shows three directional light settings and markers displayed in the Graphics window. The light markers are placed at the user-defined x, y, and z coordinates and are used to adjust the light and specular intensities on the object. You can show or hide the markers and change the color. The color of the marker corresponds to the light hitting the object. A wireframe around a light marker indicates that its node is selected in the Model Builder. When adjusting the light intensity, the light marker changes in length as the corresponding intensity is changed on the object. When adjusting the spread angle for a spotlight, the arrow increases and decreases in width as the angle value increases and decreases.

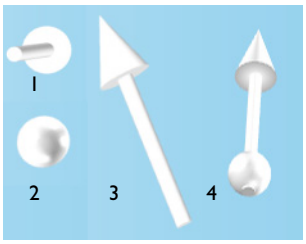

Figure 6-21: The light markers for each type of light source: (1) Headlight, (2) Point light, (3) Direction light, and (4) Spotlight.

Directional Light

By default, a **View** contains three **Directional Light** ( ) nodes. To add additional directional lights:

- In the **Model Builder** under **Definitions** click **View**. In the **View** toolbar click **Directional Light**, or
- Right-click the **View** node and select **Directional Light**.

It is also possible to convert an added a **Headlight** node to a **Directional Light**.

A directional light represents light that falls from a direction on all objects in the scene, like sunlight where all the light rays are parallel. Directional lights therefore have no position. You can adjust the direction of the light, the light and specular intensity levels, and the color as needed.

Figure 6-22 is an example of three **Directional Light** nodes where the color is changed and the light intensity adjusted for Directional Light 3. The markers are labeled 1, 2, and 3 to correspond to the nodes. The **Directional Light 3** node's light intensity setting is changed from 0.24 to 1 — the change in arrow size corresponds to the increase in

light intensity. The wireframe around a light marker means that the corresponding node is selected in the **Model Builder**. Adjust the direction of the light, the light and specular intensity levels, and the color as needed.

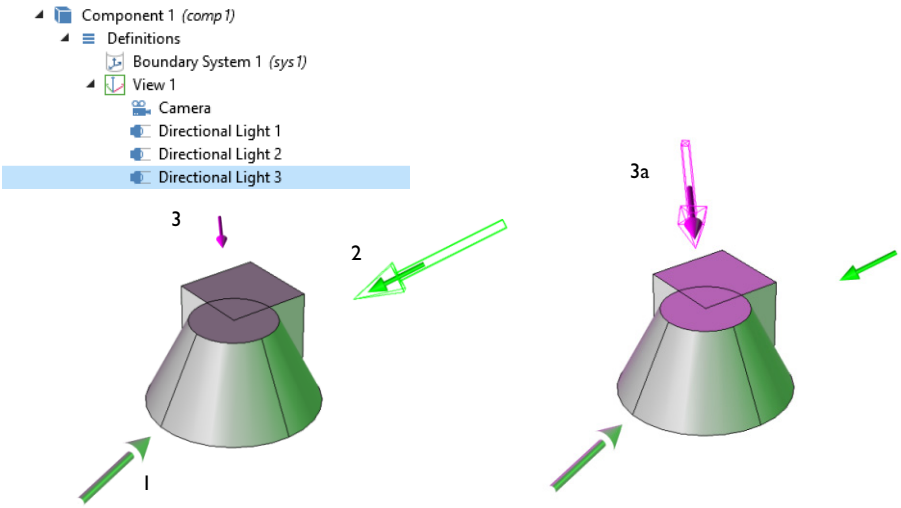

Figure 6-22: Examples of directional light markers and the location of each directional light. The markers and light can be color coded to see which areas need adjustment. The markers indicate which node is selected in the Model Builder (a wireframe around the arrow in 2 and 3a), and the level of light intensity applied (the size of the arrow; compare 3 and 3a).

DIRECTION

The **x**, **y**, and **z** coordinates define the direction in which the light falls on the objects in the scene. The arrow is a visualization of that direction with a placement that is calculated automatically depending of the scene's bounding box. The arrow points in the direction of the light.

	Change the color to something other than white to observe where the light hits the object.

SETTINGS

Adjust some of the settings such as the intensity and color of the directional light.

- Enter a **Light Intensity** or use the slider to select values. Watch the changes in the **Graphics** window at the same time to help choose a level. When adjusting the light intensity, the light marker changes in length as the corresponding intensity is changed on the object.
- Enter a **Specular intensity** (the intensity of the light that reflects off the surface of the geometry and used to define spheres and curves). This setting is turned ON and OFF on the View page (the default is ON), and the levels are adjusted for each **Specular intensity** using the field or the slider to select values between 0 and 1 (default value: 1). Watch the changes in the **Graphics** window at the same time to help choose a level. See Figure 6-20 for an example of specular light.
- Select a **Color**: **White** (default), **Custom**, **Black**, **Blue**, **Cyan**, **Green**, **Magenta**, **Red**, or **Yellow**. If you select **Custom**, click the **Color** button to choose a color from the **Custom color** palette.

- By default, the **Lock to camera coordinate system** check box is selected to make the light rotate together with the camera. Click to clear as needed; the light then follows the geometry.

	To lock the camera settings, see Camera.

- By default, the **Show light marker** is selected. The light marker is associated to the type of light applied to the object. See Figure 6-21 for examples. Click to clear the check box as needed and remove the marker from the **Graphics** window.

Point Light

The **Point Light** ( ) has a position and emits the light equally in all directions; it is like a light bulb. To add a **Point Light** node:

- In the **Model Builder** under **Definitions** click **View**. In the **View** toolbar click **Point Light**, or
- Right-click the **View** node and select **Point Light**.

Point lights therefore have no direction. The position of the light, the light and specular intensity levels, and the color can be adjusted as needed. Figure 6-23 is an example of two **Point Light** nodes added to the **View** and all other nodes disabled.

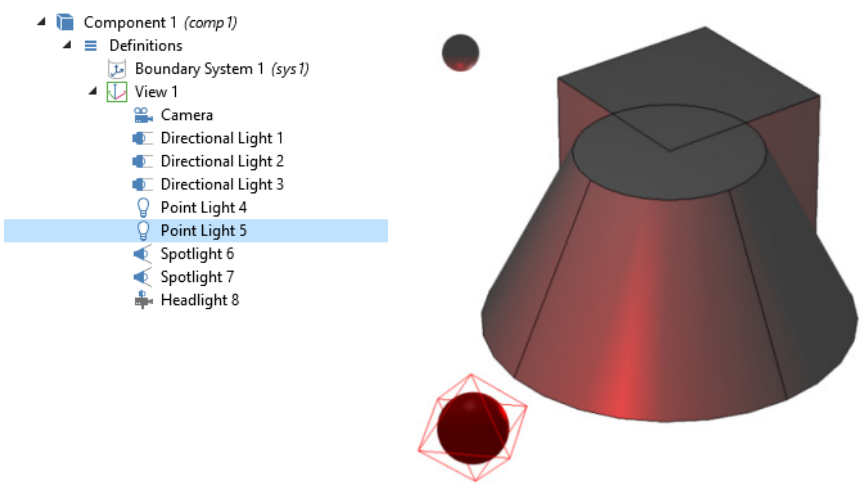

Figure 6-23: An example of two Point Light nodes added to a View. All other light nodes are disabled to show only the Point Light effects to the geometry. Point Light 5 is selected in the Model Builder as indicated by the wireframe around the light marker.

POSITION

Enter **x**, **y**, and **z** coordinates for the point light's position.

SETTINGS

Adjust some of the settings such as the intensity and color of the point light.

- Enter a **Light Intensity** or use the slider to select values. Watch the changes in the **Graphics** window at the same time to help choose a level. When adjusting the light intensity, the light marker changes in length as the corresponding intensity is changed on the object.

- Enter a **Specular intensity** (the intensity of the light that reflects off the surface of the geometry and used to define spheres and curves). This setting is turned on and off on the View page (the default is on), and the levels are adjusted for each **Specular intensity** using the field or the slider to select values between 0 and 1 (default value: 1). Watch the changes in the **Graphics** window at the same time to help choose a level. See Figure 6-20 for an example of specular light.
- Select a **Color**: **White** (default), **Custom**, **Black**, **Blue**, **Cyan**, **Green**, **Magenta**, **Red**, or **Yellow**. If you select **Custom**, click the **Color** button to choose a color from the **Custom color** palette.
- By default, the **Lock to camera coordinate system** check box is selected to make the light rotate together with the camera. Click to clear as needed; the light then follows the geometry.

To lock the camera settings, see Camera.

- By default, the **Show light marker** is selected. The light marker is associated to the type of light applied to the object. See Figure 6-21 for examples. Click to clear the check box as needed and remove the marker from the **Graphics** window.

Spotlight

The **Spotlight** ( ) acts like a flashlight and has both a position and a direction. To add a **Spotlight** node:

- In the **Model Builder**, under **Definitions** click **View**. In the **View** toolbar, click **Spotlight**, or
- Right-click the **View** node and select **Spotlight**.

Figure 6-24 is an example of two **Spotlight** nodes added to a **View** with all other nodes disabled. You can adjust the position and direction of the light, the light and specular intensity levels, and the color as needed. In addition, the spread angle can be adjusted as shown in the figure. The width of the light marker corresponds to the spread angle.

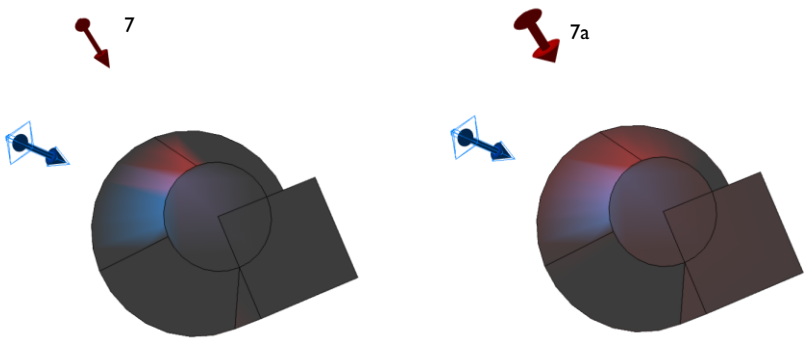

Figure 6-24: Two Spotlight nodes displayed with all other nodes disabled showing where the Spotlight is focused. When the spread angle is changed from 20 to 100 for Spotlight 7 (as indicated by the change in marker width between 7 and 7a), a corresponding change is made to the model.

POSITION

Enter **x**, **y**, and **z** coordinates for the position of the spotlight.

DIRECTION

The **x**, **y**, and **z** coordinates define the direction in which the spotlight falls on the objects in the scene. The arrow points in the direction of the light.

	Change the color to something other than white to observe where the light hits the object.

SETTINGS

Adjust some of the settings such as the spread, intensity, and color of the spotlight.

- Enter a **Spread angle** (in degrees). Also watch the changes in the **Graphics** window at the same time to help choose an angle. When adjusting the spread angle, the arrow increases and decreases in width as the angle value increases and decreases. The default is 20 degrees. See Figure 6-24 for an example.
- Enter a **Light Intensity** or use the slider to select values. Watch the changes in the **Graphics** window at the same time to help choose a level. The light marker's length changes as the corresponding light intensity changes.
- Enter a **Specular intensity** (the intensity of the light that reflects off the surface of the geometry and used to define spheres and curves). You can turn specular light on and off in the **Settings** window for **View** (default: on), and the levels are adjusted for each **Specular intensity** using the field or the slider to select values between 0 and 1 (default value: 1). Watch the changes in the **Graphics** window at the same time to help choose a level. See Figure 6-20 for an example of specular light.
- Select a **Color**: **White** (default), **Custom**, **Black**, **Blue**, **Cyan**, **Green**, **Magenta**, **Red**, or **Yellow**. If you select **Custom**, click the **Color** button to choose a color from the **Custom color** palette.
- By default, the **Lock to camera coordinate system** check box is selected to make the light rotate together with the camera. Click to clear as needed; the light then follows the geometry.

	To lock the camera settings, see Camera.

- By default, the **Show light marker** is selected. The light marker is associated to the type of light applied to the object. See Figure 6-21 for examples. Click to clear the check box as needed and remove the marker from the **Graphics** window.

Headlight

A headlight is a directional light that points to the scene from the camera position. The **Headlight** ( ) is similar to the **Directional Light** with the only difference being that it is always locked to the camera's coordinate system and a direction pointing from the camera is used. To add a **Headlight** node:

- In the **Model Builder**, under **Definitions** click **View**. In the **View** toolbar, click **Headlight**, or
- Right-click the **View** node and select **Headlight**.

Figure 6-25 is an example of one **Headlight** node added to a **View** with the **Directional Light** nodes enabled. The headlight's position and direction cannot be changed; it is based on the **Directional Light** node's (or nodes') x, y, and z coordinates. You can adjust the light and specular intensity levels and the color as needed.

You can convert a headlight to a directional light by right-clicking the **Headlight** node and select **Convert to Directional Light**.

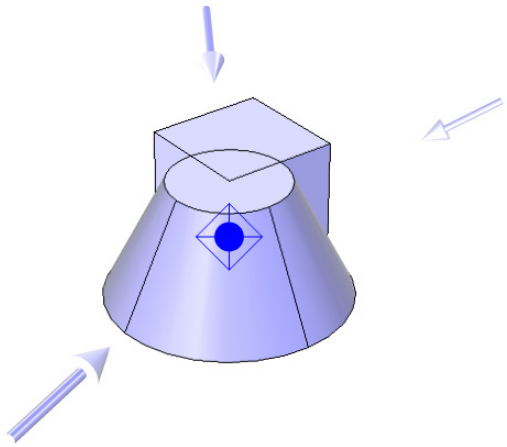

Figure 6-25: An example of a blue Headlight source with three Directional light sources set to white. If the geometry is rotated, you can adjust and view the effects of the Headlight source on the geometry based on the shades of blue and white.

SETTINGS

Adjust the settings such as the intensity and color of the headlight.

- Enter a **Light Intensity** or use the slider to select values. Watch the changes in the **Graphics** window at the same time to help choose a level. When adjusting the light intensity, the light marker changes in length as the corresponding intensity is changed on the object.
- Enter a **Specular intensity** (the intensity of the light that reflects off the surface of the geometry and used to define spheres and curves). This setting is turned ON and OFF on the View page (the default is ON), and the levels are adjusted for each **Specular intensity** using the field or the slider to select values between 0 and 1 (default value: 1). Watch the changes in the **Graphics** window at the same time to help choose a level. See Figure 6-20 for an example of specular light.
- Select a **Color**: **White** (default), **Custom**, **Black**, **Blue**, **Cyan**, **Green**, **Magenta**, **Red**, or **Yellow**. If you select **Custom**, click the **Color** button to choose a color from the **Custom color** palette.
- By default, the **Show light marker** is selected. The light marker is associated to the type of light applied to the object. See Figure 6-21 for examples. Click to clear the check box as needed and remove the marker from the **Graphics** window.

Hide for Geometry

Use the **Hide for Geometry** (feature to hide a set of geometry objects or some of their geometric entities in the created or imported geometry.

To add **Hide for Geometry** nodes:

- In the **Model Builder**, under **Definitions** click **View**. In the **View** toolbar, click **Hide**, or
- Right-click the **View** node and select **Hide Geometry Objects**.

	The **Hide for Geometry** node hides geometry objects or parts of such objects and affects the view in the Geometry branch as well as the view in the Materials, physics interface, Mesh, studies, and Results branches. The Hide for Physics node hides geometric entities (domains, boundaries, edges, or points) in the finalized geometry and affects the view in the Materials, physics interface, Mesh, studies, and Results branches but not in the Geometry branch.

The **Settings** window for **Hide for Geometry** contains the following section:

SELECTION

Hide a set of geometry objects at a specific **Geometric entity level**: **Object** (the default), **Domain**, **Boundary**, **Edge** (3D only), or **Point**. Then select the geometry objects or some of their geometric entities in the **Graphics** window. The list under the **Geometric entity level** list contains the selected objects or entities to hide in the **Geometry** branch. For example, hide a geometry object, or hide a boundary of a 3D geometry object to make it possible to view the inside of the object. Use the **Add to Selection** ( ), **Remove from Selection** ( ), **Clear Selection** ( ), and **Zoom to Selection** ( ) buttons as needed. Click the **Show Objects in Selection** button ( ) at the top of the **Settings** window to show or hide the selected geometry objects or geometric entities in the **Graphics** window.

Hide for Physics

Use the **Hide for Physics** ( ) to hide geometric entities (boundaries, for example) in the analyzed (finalized) geometry used for modeling at a specific geometric entity level for any View. Use it to hide parts of the geometry from the view in the Materials, physics interface, Mesh, studies, and Results branches. You can also use named selection to define the entities to hide.

To add **Hide for Physics** nodes:

- In the **Model Builder**, under **Definitions** click **View**. In the **View** toolbar, click **Hide**, or
- Right-click the **View** node and select **Hide for Physics**.

	The Hide for Geometry node hides geometry objects or parts of such objects and affects the view in the Geometry branch as well.

The **Settings** window for **Hide for Physics** contains the following section:

GEOMETRIC ENTITY SELECTION

Hide a set of geometric entities at a specific **Geometric entity level**: **Domain** (the default), **Boundary**, **Edge** (3D only), or **Point**. From the **Selection** list, select **Manual** (the default) or **All domains**, **All boundaries**, **All edges** (3D only), or **All points**. The **Selection** list also contains any named selections if available for the selected geometric entity level. If **Manual** is selected, go to the **Graphics** window and select the geometric entities that you want to hide. The selected entities appear in the list under the **Selection** list. For example, hide some domains that are not of interest in the model, or some boundaries only on a specific domain to get a clearer view of some of the model. You can include the hidden entities in a plot by selecting the **Show hidden entities** check box under **Plot Settings** in the corresponding plot group's **Settings** window. Use the **Add to Selection** ( ), **Remove from Selection** ( ), **Clear Selection** ( ), and **Zoom to Selection** ( ) buttons as needed. Click the **Show Objects in Selection** button ( ) at the top of the **Settings** window to show or hide the selected geometry objects or geometric entities in the **Graphics** window.

Hide for Mesh Import

Use the **Hide for Mesh Import** ( ) to hide geometric entities (boundaries, for example) in the analyzed (finalized) geometry, when based on an imported mesh, used for modeling at a specific geometric entity level for any View. It is also available from a View for a mesh part. Use it to hide parts of the geometry, created from an imported mesh or a mesh part, from the view in the Materials, physics interface, Mesh, studies, and Results branches.

To add **Hide for Mesh Import** nodes:

- In the **Model Builder**, under **Definitions** click **View**. In the **View** toolbar, click **Hide for Mesh Import**, or
- Right-click the **View** node and select **Hide for Mesh Import**.

	The **Hide for Mesh Import** node is available if you have imported a mesh as an **Import** node under **Mesh** and use as the model geometry.

The **Settings** window for **Hide for Mesh Import** contains the following section:

GEOMETRIC ENTITY SELECTION

Hide a set of geometric entities at a specific **Geometric entity level**: **Domain** (the default), **Boundary**, **Edge** (3D only), or **Point**. From the **Selection** list, select **Manual** (the default) or **All domains**, **All boundaries**, **All edges** (3D only), or **All points**. If **Manual** is selected, go to the **Graphics** window and select the geometric entities that you want to hide. The selected entities appear in the list under the **Selection** list. For example, hide some domains that are not of interest in the model, or some boundaries only on a specific domain to get a clearer view of some of the model. You can include the hidden entities in a plot by selecting the **Show hidden entities** check box under **Plot Settings** in the corresponding plot group's **Settings** window. Use the **Add to Selection** ( ), **Remove from Selection** ( ), **Clear Selection** ( ), and **Zoom to Selection** ( ) buttons as needed. Click the **Show Objects in Selection** button ( ) at the top of the **Settings** window to show or hide the selected geometry objects or geometric entities in the **Graphics** window.

7

Geometry Modeling and CAD Tools

The CAD tools in COMSOL Multiphysics® include many geometric primitives and operations for modeling the geometry using solid modeling and boundary modeling. This chapter covers geometry modeling in 1D, 2D, and 3D with examples of solid modeling, boundary modeling, Boolean operations, and other CAD tools. In addition, it shows how to use the tools for exploring geometric properties, such as volumes and surfaces. There is also information about using external CAD data and about adding and using geometries from the Part Libraries.

In this chapter:

- Creating a Geometry for Analysis
- Working with Geometry Sequences
- Part Libraries
- Geometric Primitives
- Geometry Operations
- Virtual Geometry and Mesh Control Operations
- Geometry Modeling Examples

Creating a Geometry for Analysis

Overview of Geometry Modeling Concepts

In COMSOL Multiphysics you can use *solid modeling* or *boundary modeling* to create objects in 1D, 2D, and 3D. These can be combined in the same geometry (*hybrid modeling*).

- During solid modeling, a geometry is formed as a combination of solid objects using *Boolean operations* like union, intersection, and difference. Objects formed by combining a collection of existing solids using Boolean operations are known as *composite solid objects*.
- Boundary modeling is the process of defining a solid in terms of its boundaries — for example, using lines to create a solid hexagonal domain in 2D. You can combine such a solid with *geometric primitives* — common solid modeling shapes like blocks, cones, spheres, rectangles, and circles, which are directly available in COMSOL Multiphysics.

In 3D, you can form 3D solid objects by defining 2D solids in *work planes* and then *extrude* and *revolve* these into 3D solids. It is also possible to *embed* 2D objects into the 3D geometry.

You can also overlay additional nonsolid objects on top of solid objects to control the distribution of the mesh and to improve analysis capabilities. For example, you can add a curve object to a geometry to control the element size in the vicinity of this curve, or add a point to guarantee a mesh vertex in a specific location or to create a time-dependent or parametric-value graph at that location in the geometry.

The settings for the nodes making up a geometry sequence can be changed at any time and the whole sequence can be rerun. It is also possible to parameterize the geometry using one or more parameters that define properties of a geometric primitive, for example. The COMSOL Multiphysics software then takes the parameterization into account as part of the geometry sequence for each step in a parametric sweep. You can also insert geometry sequences from other models into your current sequence. In general, you can use an expression that contains numbers, mathematical functions, and global parameters to define the dimensions and location of the geometry objects, work planes, and other geometry nodes.

You can import 2D geometries from DXF files and 3D geometries from STL and VRML files.

See Import for details of how to import these CAD file formats.

The CAD Import Module provides an interface for the import of CAD files in Parasolid, SAT (ACIS), Inventor, Pro/E, SOLIDWORKS, STEP, and IGES formats. In addition, the CATIA V5 Import Module provides an interface for CATIA V5 files.

The optional LiveLink™ products offer bidirectional links to 3D CAD software. Using these, you can run parametric geometry sweeps driven from the COMSOL environment but operating directly on the geometries in the respective CAD package.

- Working with Geometry Sequences
- Creating a Geometry Sequence
- Geometry in the *COMSOL Multiphysics Programming Reference Manual*

The *Introduction to COMSOL Multiphysics* includes a tutorial to learn how to build the busbar geometry. See the PDF-file included with COMSOL Multiphysics.

Techniques for Creating Geometries

Several techniques can ensure that a geometry results in a good mesh and gives reasonable solution times for the analysis. They include the use of symmetry and eliminating small details, gaps, holes, and singularities.

USING SYMMETRIES

Using symmetry is one of the most effective ways to reduce the size of a model. For axially symmetric geometries, a 2D axisymmetric model is sufficient. You can easily visualize the results in a full 3D geometry using a Revolution 2D dataset. Other common cases of symmetry are sector symmetry and symmetry and antisymmetry planes, which can reduce the size of a 3D model.

MAKING THE GEOMETRY MATCH THE BOUNDARY CONDITIONS

Sometimes the modeling domain is unbounded or too large for successful analysis. For those cases a suitable boundary condition can replace the exterior of the domain.

It is important that the geometry is large enough to validate the boundary conditions.

For outflows in fluid-flow models, for example, the boundary should be perpendicular to the fully developed flow. Inspections and modifications of the solved model might be necessary to verify the validity of the boundary condition. Also, for some applications, infinite elements or perfectly matched layers (PMLs) are available for modeling diffusion or wave propagation in unbounded domains.

AVOIDING EXCESSIVELY SMALL DETAILS, HOLES, AND GAPS

Many geometries, especially those designed using a CAD system, contain small holes, details, and gaps. These small features can make the domain unbounded and must be removed before analysis. Small details and holes can lead to large meshes or even failure during mesh generation. Make sure the snapping feature is activated to avoid small gaps and mismatches between the geometry objects.

The CAD Import Module contains tools for automatic and interactive repair and defeaturing of 3D CAD data. For a 2D or 3D model you can also remove small details and prepare the geometry for efficient meshing using virtual geometry operations (see Virtual Geometry Operations).

AVOIDING SINGULARITIES AND DEGENERACIES IN THE GEOMETRY

A singularity in a geometry is a sharp corner or angle that can create problems during meshing and analysis. In reality, a sharp reentrant corner leads to infinite stress values in a stress analysis of a perfectly elastic material. The stress value for a sharp corner is finite in the stress analysis, but refinement of the mesh increases the stresses in the corner without limit. To avoid a singularity, round sharp corners using fillets.

A degeneracy in the geometry can occur during solid modeling. For example, fillet areas that taper to a point and the apex of a cone can become degenerate points. These degeneracies might cause problems for the mesh generator and during the analysis. A common degeneracy in the geometry occurs when a 3D solid is created (for example, a cylinder) by rotation about an axis that touches the rotation area. It is then better to create the solid object by extruding a cross section or to use geometric 3D primitives.

Associative Geometry and Selections of Geometry Objects

Associative geometry is a concept for the automatic updating of applied physical properties, such as boundary conditions and equation coefficients, under geometric transformations. Thus, once you have defined the physical properties of a model and return to the Geometry branch to modify the geometric model, COMSOL Multiphysics updates the physical properties according to the geometry modifications. The associative geometry functionality uses geometry-mapping information between the groups of geometric entities (points, edges, boundaries, and domains) in the *finalized geometry* and the corresponding groups in the geometric model.

This geometry mapping is not always without ambiguities. COMSOL Multiphysics makes some heuristic decisions when mapping the physical properties between the finalized geometry (the object on which the physical properties are imposed) and the geometric model. In some cases, the resulting updated physical properties might not be the ones that are expected.

User-defined named *selection nodes* in the geometry sequence are useful to improve associativity compared to other selection nodes (see Creating Named Selections in the Geometry Sequence). You can refer to such selections defined in following geometry nodes (for example, as input objects). This applies both to selections of resulting entities in previous geometry nodes and selections created by selection nodes.

Choosing the Right Space Dimension

Most of the problems solved with COMSOL Multiphysics are three-dimensional (3D) in the real world. In many cases it is sufficient to solve a two-dimensional (2D) or one-dimensional (1D) problem that is close, or equivalent, to the real 3D problem. 2D models are easier to modify and generally solve much faster, so modeling mistakes are easier to find when working in 2D. Once the 2D model is verified, you are in a better position to build a 3D model.

	Not all physics interfaces are available in all space dimensions. See the documentation for the physics interfaces in COMSOL and its modules for the supported space dimensions.

1D MODELS

The following is a guide for some of the common approximations made for 1D models. Remember that modeling in 1D usually represents some 2D or 3D geometry under the assumption that nothing changes in the other dimensions.

Cartesian Coordinates

In a 1D model you view a single straight line that represents the only space dimension where there is spatial (or other) variation.

Axial Symmetry (Cylindrical Coordinates)

In an axially symmetric 1D model you view a straight line that represents the radial direction in an axially symmetric geometry.

2D MODELS

Cartesian Coordinate Systems

In this case you view a cross section in the xy-plane of the actual 3D geometry. The geometry is mathematically extended to infinity in both directions along the z-axis, assuming no variation along that axis. All the total flows in and out of boundaries are per unit length along the z-axis. A simplified way of looking at this is to assume that the geometry is extruded one unit length from the cross section along the z-axis. The total flow out of each boundary is then from the face created by the extruded boundary (a boundary in 2D is a line).

There are usually two approaches that lead to a 2D cross-sectional view of a model:

- When there is no variation of the solution in one particular dimension.
- When there is a problem where the influence of the finite extension in the third dimension can be neglected.

In some applications there are special 2D assumptions, such as the *plane strain* and *plane stress* conditions for 2D stress analysis in solid mechanics.

In addition to the unit-depth assumption, some physics interfaces (for solid mechanics and heat transfer, for example) provide the thickness as a user-defined property in 2D models. For heat transfer, the thickness is used when including out-of-plane heat transfer in the model.

Axial Symmetry (Cylindrical Coordinates)

If the 3D geometry can be constructed by revolving a cross section about an axis, and no variations in any variable occur when going around the axis of revolution, an axisymmetric physics interface can be used.

The spatial coordinates are called r and z, where r is the radius. The flow at the boundaries is given per unit length along the third dimension. Because this dimension is a revolution, you have to multiply all flows with αr, where α is the revolution angle (for example, 2π for a full turn). COMSOL Multiphysics provides this as an option during postprocessing.

Geometric Variables, Mesh Variables, and Variables Created by Frames

3D MODELS

This section discusses 3D geometry modeling practices.

Although COMSOL fully supports arbitrary 3D geometries, it is important to simplify the problem. This is because 3D models easily get large and require more computer power, memory, and time to solve. The extra time spent on simplifying a problem is probably well spent when solving it.

Is it possible to solve the problem in 2D? Given that the necessary approximations are small, the solution is more accurate in 2D because a much denser mesh can be used. See 2D Models if this is applicable.

Are there symmetries in the geometry and model? Many problems have planes where the solution on either side of the plane looks the same. A good way to check this is to flip the geometry around the plane by, for example, turning it upside down around the horizontal plane. You can then remove the geometry below the plane if you do not see any differences between the two cases regarding geometry, materials, and sources. Boundaries created by the cross section between the geometry and this plane need a symmetry boundary condition, which is available in all 3D physics interfaces.

Do you know the dependence in one direction so it can be replaced by an analytical function? You can use this approach either to convert 3D to 2D or to convert a layer to a boundary condition.

THE COORDINATE SYSTEMS AND THE SPACE DIMENSION

COMSOL Multiphysics uses a global Cartesian or cylindrical (axisymmetric) coordinate system as the basic coordinate system for the geometry. You select the geometry dimension and coordinate system when creating a new model. The default variable names for the spatial coordinates are x, y, and z for Cartesian coordinates and r, φ, and z for cylindrical coordinates. These coordinate variables (together with the variable t for the time in time-dependent models) make up the *independent variables* in COMSOL Multiphysics models.

The labels assigned to the coordinate system variables vary according to the space dimension:

- Models that are opened using the space dimensions 1D, 2D, and 3D use the Cartesian coordinate independent variable labels x, y (2D and 3D), and z (3D).
- In 2D axisymmetric geometries, the x-axis represents the r label, which is the radial coordinate, while the y-axis represents the z label, the height coordinate.
- In 1D axisymmetric geometries, the default radial coordinate is labeled r, and represented by the x-axis.

For axisymmetric cases the geometry model must fall in the positive half plane ($r \geq 0$).

- Creating a New Model
- Coordinate Systems
- Cylindrical System

Removing Interior Boundaries

Removing interior boundaries is good practice if the interior boundary is an effect of the geometry modeling and does not represent a border between different materials or between domains with different properties. When you remove the interior boundaries, the resulting geometry consists of fewer domains and puts fewer constraints on the mesh generation.

To remove interior boundaries, clear the **Keep interior boundaries** check box in a Boolean operations such as Union or Compose.

It is sometimes useful to keep interior boundaries for controlling the mesh. In such cases, use virtual operations such as Ignore Edges and Ignore Faces but keep the original interior boundaries for mesh control. The interior boundaries are then not part of the geometry for defining physics nodes but are present during meshing to define areas where you want to use a finer mesh, for example. See Mesh Control Entities for more information.

Working with Geometry Sequences

The Geometry Nodes

Once you have added a Component, The Geometry Node, representing the *geometry sequence* of the model component, is added under the Component node. Initially, a geometry sequence only contains a **Form Union** node. The Component's geometry is created by adding nodes to the sequence and building them.

- To add features to a geometry sequence, use the buttons in The Geometry Toolbar or right-click The Geometry Node in the **Model Builder** and then select one of the available options. Then see Geometric Primitives, Geometry Operations, and Virtual Geometry and Mesh Control Operations for descriptions of the geometry features. The tables in each section link to the individual feature **Settings** window descriptions.
- In 2D, also use the buttons on The Sketch Toolbar for interactive 2D drawing when you have selected the Sketch mode. Also, if your license includes the Design Module, you have access to features for adding dimensions and constraints to the 2D drawing.
- Learn about Creating a Geometry Sequence where you can use the buttons on the toolbars, right-click the **Geometry** node to add items from the context menu, copy and paste geometry features, insert an existing geometry sequence from another MPH file, or import a geometry. Sometimes Exporting a Geometry is useful.
- Once a geometry sequence is in place, you need to understand about Editing and Building Geometry Nodes, Measuring Geometry Objects, and The Form Union/Assembly Node — Uniting the Geometry.

	• Creating a New Model • The Component Node • Working with Nodes in the Model Builder • Global Definitions and Geometry Parts • Creating Named Selections in the Geometry Sequence

If you add Work Plane nodes in a 3D geometry, a Plane Geometry appears under the Work Plane node, and you can add 2D geometry objects and features under that node to create the 2D geometry sequence that defines the work plane's geometry. You can then extrude, revolve, or embed the work plane's 2D geometry in the 3D geometry. You can also use a work plane to define a coordinate system for defining a 3D geometry object's or feature's position.

The Geometry Toolbar

After a **Component** node is added to the model, the **Geometry** ribbon toolbar (Windows) or the **Geometry** contextual toolbar (macOS and Linux) is made accessible (Geometry Toolbar). Click the **Geometry** toolbar to display the options.

	Geometric Primitives and Geometry Operations for example, can be added using these toolbars. You can also right-click The Geometry Node in the **Model Builder** and select any one of the available options. You can also use some drawing tools as listed in Geometry Drawing Toolbar Buttons.

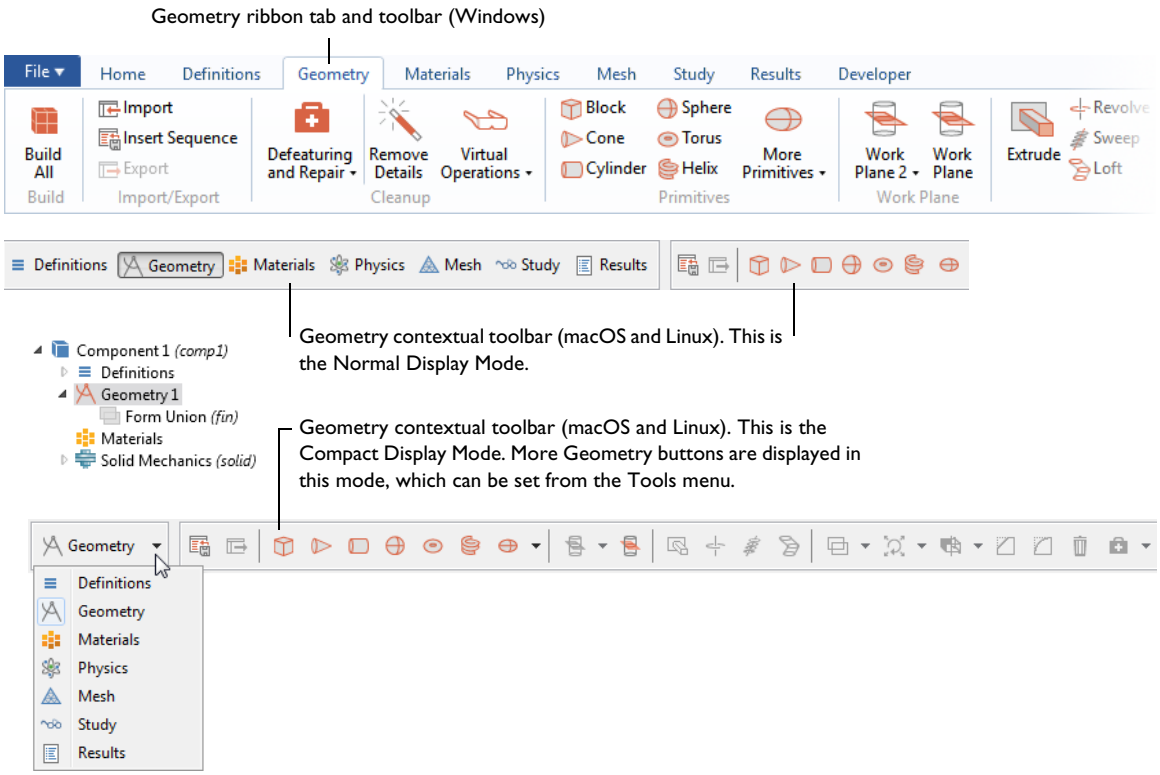

Figure 7-1: Click the Geometry ribbon toolbar (Windows users, top) or Geometry contextual toolbar (macOS and Linux users, bottom) to display the options of the Geometry toolbar. This example is the 3D toolbar. Only some of the available buttons are shown in these images, and some features are not available yet, which is indicated by a grayed out button or icon. The contextual toolbar for cross platform users can also have a Normal or Compact display mode. This changes the number of geometry buttons available.

Options become available based on where in the geometry you are working. As in Figure 7-1, the **Geometry** toolbar has some options grayed out because these are not yet available. As a geometry sequence is built, and you select geometry objects in the **Graphics** window, the applicable options become available.

When one of the buttons is clicked, COMSOL Multiphysics performs the associated operation on the selected objects and creates the resulting objects, often adding a node to the geometry sequence. If you want to modify the operation, you can edit and rebuild this node. See About Highlighted Geometric Entities in the Graphics Window for details.

DRAWING GEOMETRIC PRIMITIVES IN THE GRAPHICS WINDOW

In 1D, there are buttons for drawing Geometric Primitives using the mouse. In all space dimensions, buttons are available to create geometric primitives, but you cannot draw these using the mouse. See Geometry Toolbar and Table 2-9 for a list of the buttons and links to the individual features.

EDITING 2D GEOMETRY OBJECTS

Normally, you use the Sketch visualization to edit geometry objects in the graphics; see Editing Geometry Objects in the Graphics Window. The **Edit Object** functionality can be used to modify objects for which the Sketch visualization does not admit editing — for example, for an imported object. Using the **Edit Object** ( ) node you can adjust the edges and vertices for a 2D geometry object or to add or delete edges and vertices in the object. In the **Model Builder**, right-click a 2D **Geometry** and select **Edit Object**.

The **Edit Object** function can also be started using the **Edit Object** button ( ) in the Geometry toolbar:

1 In the **Model Builder** click the **Geometry** node. Make sure that the **Sketch** toolbar button is not selected.

2 Select a single geometry object in the **Graphics** window.

3 Click the **Edit Object** button ( ). The **Graphics** window displays handles for vertices and edge control points in the selected object.

4 Use the mouse to drag vertices and control points to new locations. The image is updated in the **Graphics** window to show the effect on the object being edited.

5 Right-click to exit the object editing mode and save the changes. A new **Edit Object** node is added in the **Model Builder**. Alternatively, if the object being edited is an **Edit Object** feature, the changes are incorporated in the existing feature and no new node is added in the **Model Builder**.

6 Click the left mouse button outside the object being edited to cancel the editing operation.

See Edit Object for details.

The Sketch Toolbar

The **Sketch** toolbar is visible when the graphics displays a 2D geometry.

THE SKETCH VISUALIZATION

Use the **Sketch** button ( ) to toggle the sketch visualization in the Graphics window on and off. The sketch visualization differs from the usual geometry visualization in the following ways:

- Domains are not shown.
- There are extra vertices (brown) and edges (dashed, brown) in some primitive objects that can be used to control the object (see the table below).
- There are no self-intersection vertices in Polygon and Composite Curve features.
- A Circle or Ellipse sector has no intermediate vertices on the circumference.
- The following view settings have no effect: Show geometry labels, Show edge direction arrows, Show selection colors, and Show material color and texture.

The following table lists extra vertices and edges that appear in the Sketch mode:

TABLE 7-1: EXTRA VERTICES AND EDGES IN THE SKETCH MODE

PRIMITIVE FEATURE	EXTRA VERTICES AND EDGES
Circular Arc	Center vertex and radial edges
Interpolation Curve	Interpolation points
Quadratic/Cubic Bézier	Control points
Rectangle, Square, Circle, Ellipse	Center vertex

When the sketch visualization is enabled, the **Graphics** toolbar is modified as follows:

- Instead of the **Select Objects** menu button, the **Select Edges** ( ) and **Select Vertices** ( ) buttons are available. Use them to enable or disable selection of edges and vertices, respectively.
- If you have the Design Module, there is also a **Select Constraints and Dimensions** button ( ) that enables or disables selection of symbols that corresponding to constraints and dimensions.
- The buttons that control hiding are not present.
- The buttons that control coloring of selections are not present.

DRAWING GEOMETRY PRIMITIVES IN THE GRAPHICS WINDOW

Use the buttons in the **Draw** group to draw geometric primitives in the Graphics window (see the table in The Sketch Toolbar section). For example, use the **Polygon**, **Circular Arc**, **Interpolation Curve**, **Quadratic**, and **Cubic** buttons to draw a sequence of curve segments. When drawing, you control snapping to the grid or the geometry using the **Snap to Grid** and **Snap to Geometry** buttons, respectively. If the **Solid** button is selected and you draw a closed curve, it will result in a solid geometry object when you deselect the **Sketch** button.

DISPLAYING COORDINATES AND GEOMETRIC PRIMITIVE DIMENSIONS

For Windows users, the COMSOL Desktop displays the current x and y coordinates at the bottom of the desktop when you move the cursor in the Graphics window when working with the geometry. Also, when you interactively create 2D geometric primitives, the display shows the current dimensions for the following geometric primitives:

- Rectangle: The width and height; for example. **w=3.345, h=2.335**
- Square: The side length; for example, **s=1.353**
- Circle: The radius; for example, **r=1.352**
- Ellipse: The semiaxes; for example, **a=3.525, b=5.134**

If you do not want to display this information, you can clear the **Show mouse coordinates when drawing** check box on the **Graphics and Plot Windows** page in the **Preferences** dialog box.

SELECTING ENTITIES IN THE GRAPHICS WINDOW

When you hover over a vertex or edge, it is usually highlighted in red. If you hold down the Ctrl key and the entity is already selected, it will instead be green to indicate that the entity will become deselected when you click it. If you hold down the Shift key, the other entities of the object will be highlighted in a weaker red color, or in a weaker green color if you also hold down the Ctrl key and the entity is already selected. You can use the scroll wheel to cycle through all entities at the cursor position.

When you click a vertex or edge, it becomes the only selected entity (shown in blue). If you hold down the Ctrl key, the entity is instead added to the selection or removed from the selection. If you hold down the Shift key, the other entities of the object will also become selected or deselected.

When you double-click a vertex or edge, the corresponding geometry feature will become selected in the **Model Builder** tree.

If you have the Design Module, you can select symbols for constraints and dimensions similarly.

EDITING GEOMETRY OBJECTS IN THE GRAPHICS WINDOW

You can edit a primitive geometry object by hovering an unselected vertex or edge, pressing the left mouse button, and dragging the cursor to the desired position. Pressing the Ctrl or Shift key has a special meaning for some primitives.

TABLE 7-2: BEHAVIOR WHEN DRAGGING GEOMETRIC PRIMITIVES

PRIMITIVE FEATURE	SPECIAL BEHAVIOR WHEN DRAGGING
Circular Arc	By default, the center is kept fixed (except when dragging the center). Ctrl keeps the endpoints fixed instead, except when dragging an endpoint — in this case, the other endpoint and its tangent direction are fixed instead.
Rectangle, Square	Ctrl keeps the center fixed.
Rectangle, Ellipse	Shift keeps the aspect ratio.

If you drag a selected vertex or edge, all the selected entities will instead be moved by translation.

The following primitives do not support dragging:

- Polygon primitives where the **Data source** list is not set to **Table**.

- Interpolation Curve primitives where the **Data source** list is not set to **Table** or **Relative tolerance** is not 0.
- Rectangle, Square, Circle, and Ellipse primitives using layers.
- Parametric Curve primitives.

If you have the Design Module and the geometry setting **Use constraints and dimensions** is **On**, then constraints and dimensions will be maintained while dragging. In addition, it is then possible to drag entities of geometry objects created by operation features.

COMPOSITE CURVES

A **Composite Curve** feature node has a sequence of subnodes of type **Polygon**, **Circular Arc**, **Interpolation Curve**, **Quadratic Bézier**, and **Cubic Bézier**. The subnodes (child features) always form a connected curve chain (open or closed). You can create a **Composite Curve** in the following ways:

- Draw a sequence of curve segments using the **Polygon**, **Circular Arc**, **Interpolation Curve**, **Quadratic**, and **Cubic** toolbar buttons.
- Select a number of edges in the Graphics window and then click the **Composite Curves** toolbar button ( ).
- Select a number of curve features in the model tree, right-click, and select **Composite Curves** from the context menu.

Using **Composite Curves** on polygons gives a single polygon.

FILLETS

Click the **Fillet** toolbar button ( ) to create fillets (rounded corners) by optionally selecting vertices and then dragging a vertex to the desired fillet shape.

DELETING GEOMETRIC ENTITIES IN THE GRAPHICS WINDOW

To delete geometric entities, select some vertices and edges in the Graphics window. Then click the **Delete** button or press the Del key. This will delete the selected entities using a combination of the following methods:

- Removing geometry feature nodes from the model tree.
- Removing points from the **Polygon** features.
- Splitting **Polygon** and **Composite Curve** features into several features.
- Adding **Delete Entities** feature nodes.

This process will not delete selected vertices that are adjacent to an edge that is not selected.

If you have the Design Module, you can also select symbols for constraint and dimension features and then delete them by clicking **Delete** or pressing Del.

The Geometry Node

Under a **Geometry** node ( ) you define and create the geometry sequence for the model component. The **Geometry** node also contains some general settings for the geometry such as the length unit.

Adding a Component Geometry

To add a new Component, which includes a Geometry node, right-click the root node of the **Model Builder**, and select **Add Component** (or use the **Model Wizard** to create a new sequence as described in Creating a New Model). A

Component node is added to the **Model Builder** containing a **Geometry 1** (if it is the first Component) feature node with the start of a geometry sequence containing only a **Form Union** node (see Figure 7-1 for an example).

	See Geometric Primitives, Geometry Operations and Virtual Geometry and Mesh Control Operations for descriptions of the geometry features. The tables in each section link to the individual feature **Settings** window descriptions. To add features to a geometry sequence, use the buttons in The Geometry Toolbar or right-click the **Geometry** node ( ) in the **Model Builder** and then select one of the available options.

To open the **Settings** window for a geometry, click the **Geometry** node in the Model Builder and adjust the following settings sections.

UNITS

Select the **Scale values when changing units** check box to scale the values for the geometric dimensions so that the geometric objects keep their physical size. The default setting is to not scale the values when changing units; the program then interprets the values for the geometric dimensions using the new units for length and angle. The values themselves do not change.

From the **Length unit** list select the length unit to use in fields for lengths and for visualization of the geometry. You can override the unit using the unit syntax to specify the length unit (for example, `13[mm]`). When solving the model, all lengths are converted to the base unit for length. If you change the unit, COMSOL Multiphysics converts all pure numeric values in fields for lengths to the new unit, if you have selected the **Scale values when changing units** check box (see above).

	For information about available length units and prefixes, see Specifying Model Equation Settings.

Angular Unit

From the **Angular unit** list choose to use radians or degrees as the angular unit to use in fields for angles. You can override the unit by entering, for example, `0.3[rad]`. The program assumes that numeric inputs and outputs of trigonometric functions are in radians. If you change the unit, all pure numeric values in fields for angles are converted to the new unit, if you have selected the **Scale values when changing units** check box (see above).

CONSTRAINTS AND DIMENSIONS.

	This section is only visible in 2D and 2D Axisymmetric components and if your license includes the Design Module.

Use the **Use constraints and dimensions** list to enable or disable the use of geometric constraints and dimensions. The default for this setting is determined by a preference settings on the **Geometry** page in the **Preferences** dialog box: Select or clear the **In new models** check box under **Use constraints and dimensions**. This preference setting is On by default. In the **Preferences** dialog box, you can also specify the **Maximum number of entities in the constraints and dimensions solver** (the default value is 10,000 geometric entities). You can use this limit to prevent lengthy computations for very complex 2D geometries when using the constraints and dimensions solver.

If you have selected **On**, the **Constraint and dimension features to build** list determines what constraint and dimension features to include when building the geometry:

- **All** (the default). This means that all constraints and dimension features are used.

- **None**. This means that no constraint and dimension feature are used. Note that there can be other constraints and dimensions, generated by the primitive features.
- **Up to build target**. This means that only the constraint and dimension features up to the feature you are building up to are used.

The Status message informs you whether the constraints and dimensions define the geometry uniquely.

ADVANCED

Geometry Representation (3D Only)

This list is only visible if you have a license for the CAD Import Module. The **Geometry representation** list controls which kernel (geometric modeler) that COMSOL uses to represent and operate on the geometry objects: the CAD Import Module's kernel (Parasolid) or COMSOL's own kernel.

- If you choose **CAD kernel** (requires the CAD Import Module), all objects and operations that support the CAD Import Module's kernel use it. For example, Work Plane, Extrude, and Revolve operations do not support this kernel. You need to choose the CAD kernel to use the defeaturing and repair tools, such as the Cap Faces feature, as well as to import 3D geometries using various 3D CAD file formats.
- If you choose **COMSOL kernel**, all objects are represented using COMSOL's kernel.

When you change the **Geometry representation** setting, all nodes that support the CAD kernel are marked as edited with an asterisk (*) in the upper-right corner of the node's icon. To rebuild the geometry using the new kernel, click the **Build All** button ( ). To avoid re-solving an already solved model, you can click the **Update Solution** button ( ) on the **Study** toolbar to map the solutions from the geometry represented by the CAD kernel to the new geometry represented by the COMSOL kernel.

	If you solve a model using the CAD kernel, it is not possible to view and postprocess the solution if you open it in a COMSOL Multiphysics session where a license for the CAD Import Module is not available, unless, before saving the model, you change the geometry representation to COMSOL kernel and update the solution.

When you create a new model, its default geometry representation is controlled by the preference setting **Geometry>Geometry representation>In new models**.

When you open an existing model, you normally use the geometry representation used in the model. To always get the possibility to convert the geometry to the COMSOL kernel, change the preference setting **Geometry>Geometry representation>When opening an existing model** to **Convert to COMSOL kernel**.

Default Repair Tolerance

This is the default value that is used when you add a feature that has a **Repair tolerance** list (for example, Boolean operations and conversions):

- The default value in the **Default repair tolerance** list is **Automatic**, which for the COMSOL kernel is a relative repair tolerance of 10^{-6}. For the CAD kernel, the automatic setting changes the representation of the input objects so they get a common scale factor, which is the maximum of the scale factors of the input objects; if the operation fails, the automatic setting uses the COMSOL kernel instead.
- Choose **Relative** to enter a value for the **Default relative repair tolerance** field (the default is 10^{-6}). This value is relative to the largest absolute value of the coordinates of all input objects.
- Choose **Absolute** to enter a value for the **Default absolute repair tolerance** field (the default is 10^{-6}; SI unit: m). This value uses the same unit as the geometry sequence's length unit.

Automatic Rebuild

The **Automatic rebuild** check box controls if the geometry sequence is automatically rebuilt when clicking on a node in the model tree outside the geometry sequence. The default value is controlled by the preference setting **Geometry>Automatic rebuild>Default in new geometries**. Select the **Automatic rebuild** check box to always rebuild the geometry, or clear it to prevent any automatic rebuilding of the geometry.

Plane Geometry

Under a **Plane Geometry** node ( ) you define and create the geometry sequence for a work plane. The **Plane Geometry** node also contains some settings for the visualization of the work plane's geometry.

Click the **Plane Geometry** node to open the Work Plane Modal Toolbar.

	In the settings for the 2D geometry objects under a **Plane Geometry** nodes, the **Selections of Resulting Entities** section is only applicable in the geometry sequence, and the **Show in physics** list is therefore not available.

VISUALIZATION

Select the **View work plane geometry in 3D** check box to create the work plane geometry on the work plane in a 3D view (see Drawing on a 2D Work Plane in 3D). The default setting is to display the work plane in the **Graphics** window as a separate 2D geometry.

Under **In-plane visualization of 3D geometry**, specify how to visualize 3D objects in the work plane (as blue curves and points) by selecting one or more of the following check boxes (all of them are selected by default):

- **Coincident entities (blue)** — Show edges and points (in a pure blue color) that lie in the work plane.
- **Intersection (cyan)** — Show the intersection of 3D geometry and the work plane (in cyan).
- **Projection (light blue)** — Show the projection of all edges and points onto the work plane (in light blue).

Geometry objects created in the work plane's plane geometry (and are embedded in the 3D geometry) are not visualized using blue curves or points.

To update the visualization, click the **Build Preceding 3D State** button to show the effect of the 3D state preceding this work plane. Then, any in-plane visualization of other 3D objects, built using an extrusion from the work plane, for example, that appear below the work plane no longer appears.

CONSTRAINTS AND DIMENSIONS

	This section is only visible if your license includes the Design Module.

Use the **Use constraints and dimensions** list to enable or disable the use of geometric constraints and dimensions (default: **Off**).

If you have selected **On**, the **Constraint and dimension features to build** list determines what constraint and dimension features to include when building the geometry:

- **All** (the default). This means that all constraints and dimension features are used.
- **None**. This means that no constraint and dimension feature are used. Note that there can be other constraints and dimensions, generated by the primitive features.
- **Up to build target**. This means that only the constraint and dimension features up to the feature you are building up to are used.

The Status message informs you whether the constraints and dimensions define the geometry uniquely.

Creating a Geometry Sequence

There are a variety of ways to add and build geometry nodes: use the buttons on the toolbars, right-click the Geometry node to add items from the context menu, copy and paste geometry features, insert an existing geometry sequence from another MPH file, or import a geometry.

	The *Introduction to COMSOL Multiphysics* includes a tutorial to learn how to build the busbar geometry. See *Appendix A — Building a Geometry* in that book or the printed copy included with COMSOL Multiphysics.

USING THE TOOLBARS AND CONTEXT MENUS

Use the buttons in The Geometry Toolbar. You have buttons for geometric primitives as well as operations and conversions acting on geometry objects. See also The Sketch Toolbar.

You can also select objects or geometric entities in the Graphics window and then click a button or choose a context menu item. The selected objects or entities are then an input to the created geometry operation feature. To access all the features from the context menu, right-click The Geometry Node in the Model Builder and then select one of the available options.

However the geometry is added to the sequence, define the node properties in the **Settings** window. In numerical fields you can enter expressions that contain parameters defined in **Parameters** under **Global Definitions** in the model tree to parameterize the geometry. Click the **Build Selected** button ( ) in the **Settings** window to see the geometry objects that result.

COPYING AND PASTING GEOMETRY OBJECTS

When using the copy/paste functionality, the copy initially contains the same data as the copied node, but there is no future connection between the two nodes. For example, if the original node is changed, it has no effect on the second node that was copied. To keep a link between nodes, use the Transforms Copy feature instead.

With the standard copy and paste method, a copy of the geometry object (a rectangle or sphere, for example) is inserted into the same geometry sequence, or another geometry sequence in the same Component, and is added after the current feature of the selected geometry sequence. The copy feature can also be used for Work Plane geometry sequences.

	The copied object must be pasted under a Component with the same space dimension. For example, a Sphere can only be pasted into a 3D Component model.

	Copying, Pasting, and Duplicating Nodes

INSERTING A SEQUENCE

To insert a geometry sequence from an MPH-file:

- In the **Geometry** toolbar, click **Insert Sequence** ( ), or
- Right-click the **Geometry** node and select **Insert Sequence** ( ) from the context menu.

Then browse to a filename and click **Open**. The file is scanned for geometry sequences having the right space dimension. If there is just one such sequence, its nodes are inserted into the geometry sequence after the current

node. If the file contains more than one such sequence, a dialog box opens. Select the geometry sequence from the list of available sequences. Finally click **OK**. The nodes in the selected sequence are inserted into the geometry sequence after the current node.

If the geometry sequence contains references to user-defined functions or parameters, those functions and parameters are also inserted in the model under **Global Definitions**, or in case of nonglobal functions, under **Definitions** in the same Component the geometry sequence is located.

	Functions and parameters are inserted even if a function or parameter with the same name already exists in the model. You have to manually resolve any conflicts before the geometry sequence can be built.

IMPORTING A GEOMETRY

To import an existing geometry:

- In the **Geometry** toolbar, click **Import** ( ), or
- Right-click the **Geometry** node and select **Import** ( ) from the context menu.

Then in the **Settings** window for **Import** click **Browse**. Navigate to the geometry file and double-click it. Then click **Import**.

	If the geometry import fails to analyze the face topology (for a geometry based on mesh, for example), **Error** nodes ( ) appear under the **Import** node. If the **Error** node contains details with coordinates for the location where it failed to analyze the topology, the Graphics window indicates that location using red circles. Click the **Center at Coordinates** button to center the camera so that you can zoom into that location by clicking the **Zoom In** button ( ) one or more times.

You could also export an existing geometry from another model and then import it. See Exporting a Geometry for information.

	For example, in the COMSOL installation directory navigate to the folder `applications/COMSOL_Multiphysics/Tutorials` and double-click `virtualgeom_demo_2.mphbin`. The location of the file varies based on the installation. For example, if the installation is on your hard drive, the file path might be similar to `C:\Program Files\COMSOL\COMSOL55\Multiphysics\applications` (in Windows).

	• Import • Exporting a Geometry

Editing and Building Geometry Nodes

THE CURRENT NODE IN GEOMETRY SEQUENCES

Once a geometry node is added, it is inserted in the sequence after the *current node*. To indicate the current node, it displays with a quadratic frame around its icon. When you have added a node, it becomes the current node, but COMSOL Multiphysics does not build it automatically. If you select a node and build it, this node becomes current. The frame is green ( ) to show that the current node is built. If the current node needs to be rebuilt, the frame

is yellow ( ). See Dynamic Nodes in the Model Builder for examples that show these icon additions for visual feedback about a node's status.

Adding a Node at an Arbitrary Position in a Sequence

To add a node after an existing node, first select the existing node and then click **Build Selected** ( ), or right-click the existing node and select **Build Selected**. The selected node then becomes current. Then add the new node.

To add a node before an existing node, first select the existing node, right-click the existing node, and select **Build Preceding** ( ) (or press F6). Then add the node.

EDITING A NODE

To edit a node, select it in the model tree and make changes in the **Settings** window. Nodes that you have edited display with an asterisk (*) at the upper-right corner of their icons in the **Model Builder** window. Nodes that depend on the edited node display with a yellow triangle at the lower-right corner of the node's icon to indicate that they need to be rebuilt. To see the result of your edits in the **Graphics** window, you need to build the node. You can do this in two ways:

- Click the **Build Selected** button ( ) in the **Settings** window, or right-click the node in the tree and select **Build Selected**. This builds all nodes (if needed) from the first up to the selected node.
- Click the **Build All Objects** button ( ) in the **Settings** window. This builds all nodes in the geometry sequence above the **Form Union/Assembly** node (if needed).
- Click the **Build All** button ( ) in the **Settings** window or the toolbar, or right-click the **Geometry** node in the tree and select **Build All**. This builds all nodes in the geometry sequence (if needed).

HIGHLIGHTING THE RESULTING GEOMETRY OBJECTS

To highlight the result of a node in the geometry sequence, click the **Highlight Result** button ( ) in the **Settings** window. If that button is pressed, the resulting geometry objects are highlighted using a yellow color in the **Graphics** window. Click the **Highlight Result** button ( ) again to turn off the highlighting. The state of the button is common for all nodes in the geometry sequence.

AUTOMATIC BUILDING OF GEOMETRY NODES

In some situations, COMSOL Multiphysics builds geometry nodes directly, such as when you:

- Add a node, the software builds the current node (and all its preceding nodes) before showing the **Settings** window for the new node.
- Generate a mesh or solve the model, the software builds the finalized geometry; that is, it builds all nodes if needed.
- Select a node that uses the finalized geometry, like physics nodes and mesh nodes, the software builds the finalized geometry if **Automatic rebuild** is selected in the geometry node settings.
- Open a CAD Defeaturing tools settings, the software builds the current node (and all its preceding nodes).

DELETING NODES

- To delete selected nodes, right-click the nodes and select **Delete** ( ) or press Del (the Delete key). Confirm the deletion of nodes for it to take effect.
- To delete a geometry right-click the **Geometry** node in the **Model Builder** and select **Delete Sequence** ( ).
- To delete geometry objects or entities, in the **Model Builder**, right-click **Geometry** and select **Delete Entities** ( ). Or select objects in the **Graphics** window, and press Del (the Delete key) or click the **Delete** button ( ) in the Graphics toolbar.

If you use the Delete key or the **Delete** button to delete objects, COMSOL Multiphysics deletes the selected objects that correspond to primitive features by deleting their nodes from the geometry sequence. If you delete objects that

do not correspond to primitive features or if you delete geometric entities, a **Delete Entities** node appears in the sequence.

Exporting a Geometry

You can export geometry objects to a COMSOL Multiphysics binary file (`.mphbin`) or text file (`.mphtxt`).

	2D geometry objects can also be exported to a DXF file.

	• 3D geometry objects can also be exported to a STL file in binary or text format (*.stl). • If you have a license for the CAD Import Module, the Design Module, or a LiveLink product for CAD software, 3D geometry objects can also be exported to Parasolid files (*.x_t or *.xmt_txt; *.x_b or *.xmt_bin), ACIS files (*.sat, or *.sab), IGES files (*.igs or *.iges), and STEP files (*.step or *.stp). For details on exporting to these 3D CAD formats see the user's guide of one of the mentioned products.

To export an existing geometry to file:

- In the **Geometry** toolbar, click **Export** ( ), or
- Right-click the **Geometry** node and select **Export** ( ) from the context menu.

Then, in the **Export** window, select a file type among the available formats in the **File type** list and enter a filename including the path in the **Filename** field (or click **Browse** to specify the filename).

For STL file export you can select objects, domains, or boundaries to export. For the other file types you select the objects to export by first clicking the **Export selected objects** button and then adding the objects to export to the **Selected object** list, or click the **Export Entire Finalized Geometry** button to export the result of the finalize operation.

	For a geometry part and for a Plane Geometry of a work plane, the **Export Entire Finalized Geometry** option does not exist, so that button and the **Export selected objects** button are not available. Instead, just add objects to export to the **Selected object** list.

Click **Export** to export the selected geometry to the specified file. A confirmation message appears in The Messages Window.

	The `.mphbin` and `.mphtxt` formats do not contain unit information. When the exported file is imported into a geometry with a different length unit, you can use a Scale feature to scale the imported objects to the correct size.

	To export a geometry to use in an earlier version of COMSOL Multiphysics in the COMSOL format, select a version from the **Compatible with version** list.

	• Also see Import for details of how to import CAD file formats. • Creating a Geometry Sequence

Measuring Geometry Objects

To measure a set of geometric objects or entities selected in the **Graphics** window, click the **Measure** button ( ) in the **Geometry** toolbar (this button is also available in the **Mesh** toolbar). The result appears in The Messages Window:

- If objects are selected, the number of entities and objects is displayed.
- If domains are selected, the total volume/area/length and boundary area/length is displayed.
- If faces/edges are selected, the total area/length is displayed.
- If a single vertex (point) is selected, its coordinates are displayed.
- If two vertices (points) are selected, the distance between those vertices is displayed.
- If two or more vertices (points) are selected, the average coordinates for the selected points are displayed.

In all cases above, except for a single vertex (point), the maximum and minimum coordinate values for the selected objects' or entities' bounding box are displayed under **Bounding box**.

	For most measured quantities, the precision is the one set in the **Output display precision** field in the **Preferences** dialog box. For straight edges and for the coordinates of and distances between vertices, the precision is at least 10 digits.

Another way to measure geometry objects, is to right-click the **Geometry** node and select **Measure** ( ) from the context menu. This opens the **Measure** window, which has the following contents:

The **Measure** window is a tool to measure geometry objects and entities. You can, for example, measure the volume, area, or length of a selected domain, face, or edge. Also view the coordinates of a vertex, the distance between two vertices, or the number of entities and the geometry representation (requires a license for the CAD Import Module) of an object.

GEOMETRY TYPE

From the **Type of geometry** list, select to measure geometry objects (the default) or the finalized geometry.

SELECTION

From the **Geometric entity level** list, select **Object**, **Domain**, **Boundary**, **Edge**, or **Point**. Then select some objects or entities of the selected type to add to the list.

MEASUREMENTS

Under **Measurements** you find information about these objects or entities. For objects, this section contains the total number of domains, boundaries, edges, and points, and the geometry representation. For domains, boundaries, and edges, their total volume, area, or length appears. If you select a point (vertex), its coordinates are shown. If you select two points (vertices), the distance is shown. If you select two or more points, the average coordinates for the selected points are shown. In all cases except for a single point, maximum and minimum values of the bounding box are also shown.

	You can add a **Mass Properties** node to define variables for mass properties such as the total volume, total mass, and the center of mass.

The Form Union/Assembly Node — Uniting the Geometry

To unite the geometry, COMSOL Multiphysics evaluates the geometry sequence from the top down. The final node in the geometry sequence (before any virtual operations, if present), the **Form Union/Assembly** node,

determines how to form the geometry that is used for meshing and analysis (possibly after also applying virtual operations). There are two methods to form the geometry, which also determine the name of the node: **Form Union** or **Form Assembly** ( ). There are some differences and aspects to consider when choosing a method:

- The default method is to form a *union*. The software then forms a union from all geometry objects that the geometry sequence contains or creates. The union is divided into domains separated by boundaries according to the participating geometry objects. You can mesh the entire geometry and model the physics by assigning material properties, boundary conditions, and other data for the model. It is also possible but often not necessary to specify boundary conditions on interior boundaries between domains in the geometry. By default, COMSOL Multiphysics ensures continuity in the physics interface fields across interior boundaries. See also Removing Interior Boundaries.
- The alternative method is to form an *assembly*. The software then treats the geometry as a collection of the geometry objects instead of uniting them. This means that you must use pairs to connect boundaries where a field is continuous, but it also makes it possible to use special pair conditions for applications such as contact modeling, where you can add contact pairs to model contact between geometric parts (requires the Structural Mechanics Module or the MEMS Module). Forming an assembly is also required to model geometry domains that slide or move relative to each other. By default, identity pairs are created automatically when forming an assembly. An assembly can also be useful for meshing each geometry object independently in, for example, thin and slender geometries with high aspect ratios. Another case where you need to use an assembly is when the geometry is too complex for forming a union, which might be the case when importing an assembly geometry from CAD data.

When forming a union or an assembly for axisymmetric models, COMSOL Multiphysics removes all parts of the geometry from the $r<0$ half plane.

PHYSICS CONSIDERATIONS

The physical implication of the Form Union step is that the domains in the model cannot slide or move relative to each other. This is an appropriate default assumption for most modeling within COMSOL Multiphysics, but it is not valid when using any of the following physics interfaces:

- Solid Mechanics, when contact features are included
- Multibody Dynamics
- Rotating Machinery, Magnetic
- Rotating Machinery, Fluid Flow

When you use any of the above physics interfaces, or when you want to have a nonconforming mesh between adjacent domains, finalize the geometry with the Form Assembly setting instead.

The **Form Union/Assembly** node ( ) ends each geometry sequence in 1D. In 2D and 3D, it is possible to add virtual operation nodes, some partitioning nodes, and selection nodes after that node. In the Model Tree, its label is **Form Union** or **Form Assembly** depending on its settings. By default, it unites all geometry objects into a single geometry object (this is the **Form Union** variant). You cannot delete or disable the **Form Union/Assembly** node. When you leave the geometry sequence to define materials or physics nodes, the **Messages** window provides information about the method (forming a union or an assembly) and about the number of geometric entities (domain, boundaries, and so on) in the geometry.

FORM UNION/ASSEMBLY

The default method, **Form a union**, forms a union of all geometry objects. Select **Form an assembly** from the **Action** list if you do not want the geometry objects to be united. The program then forms the geometry by collecting the objects in an *assembly object*. If you form an assembly, select the **Create imprints** check box to get imprints of the

geometry objects that touch each other. An imprint of a usually smaller object's boundary on an adjacent larger object's boundary inserts points on the boundary in 2D and creates edges on the boundary in 3D. Creating imprints can be useful when you need identical matching meshes on both objects' boundaries or when you want to split the larger boundary so that it contains a segment or area that matches the smaller boundary. Select the **Create pairs** check box (selected by default) to generate pairs corresponding to the objects that touch each other. Select the **Split disconnected pairs** check box to generate one pair for each connected set of boundaries. Clear the **Split disconnected pairs** check box to generate one pair for each pair of objects that touch each other. From the **Pair type** list, select **Identity pair** (the default) to generate identity pairs, which makes it possible to connect the physics fields across the objects' boundaries, or **Contact pair** to generate contact pairs. Contact pairs are only useful for contact modeling in structural mechanics and require a license for the Structural Mechanics Module or the MEMS Module.

You can change the settings for the **Repair tolerance** list if you experience problems with the Form Union/Assembly operation.

- The default value in the **Repair tolerance** list is **Automatic**, which for 3D objects represented using the CAD kernel determines the repair tolerance internally. For 3D objects represented using the COMSOL kernel, and for 2D and 1D objects, **Automatic** means a relative repair tolerance of 10^{-6}.
- Choose **Relative** to enter a value for the **Relative repair tolerance** field (the default is determined by the main **Geometry** node's setting). This value is relative to the largest absolute value of the coordinates of all input objects.
- Choose **Absolute** to enter a value for the **Absolute repair tolerance** field (the default is determined by the main **Geometry** node's setting; SI unit: m). This value uses the same unit as the geometry sequence's length unit.

MESHING ASPECTS

The options for creating meshes depend on whether you form a union or form an assembly, with or without imprints. The following figure shows a comparison of the meshes created with Form Union, Form Assembly with imprints, and Form Assembly without imprints.

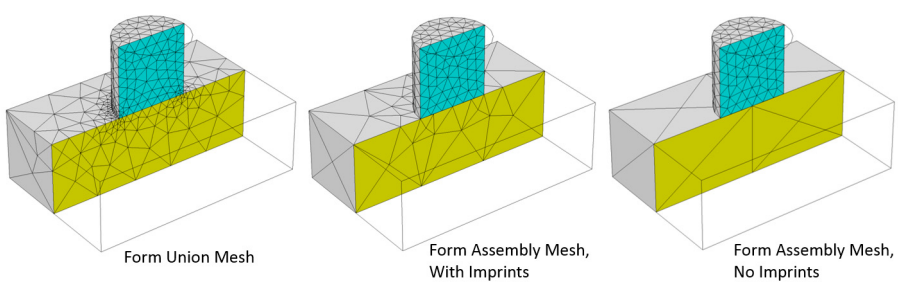

The Form Union mesh is a conforming mesh across the mating face. That is, the mesh elements on either side of the boundaries share the same nodes and faces. With such a mesh, the continuity of the fields and fluxes is naturally satisfied via the finite element method. The Form Assembly mesh makes it possible to create nonconforming meshes. The element faces at that boundary will share nodes. With imprints enabled, the element boundaries line up. The elements on either side have nonconforming nodes, but the software adds constraint equations to approximately enforce continuity of the fields and fluxes. With imprints disabled, the element boundaries between objects do not line up. The constraint equations that approximately enforce continuity of the fields and fluxes between the domains will be more approximate. The Form Union mesh will be the most accurate but require the most memory to solve. The Form Assembly without imprints will be the least accurate and require relatively less memory to solve.

In 2D and 3D, virtual operation nodes and selection nodes can appear after the **Form Union/Assembly** node.

Using Geometry Parts

If you consider the geometry sequence as a computer program, a *geometry part* corresponds to a subroutine, function, method, or procedure in a programming language. In other words, a geometry part is a geometry sequence whose input is a set of input parameters (having numerical values) and whose output is a set of geometry objects, making it possible to create instances of these parts using different input parameter values and different orientation and position in the overall geometry.

You can call the geometry part (that is, create an instance of the part) with new values of the input parameters (arguments). You can call it several times, and the calls can be nested. You can also include several variants of a part in an MPH-file, which makes it possible to choose from those part variants when loading the part.

CREATING A GEOMETRY PART

The geometry parts appear under the **Geometry Parts** node ( ), located under **Global Definitions** ( ) in the model tree, so they are not attached to a specific model component. To create a part, right-click the **Global Definitions** node, and then, from the **Geometry Parts** submenu, select **3D Part**, **2D Part**, or **1D Part**. If a **Geometry Parts** node ( ) exists, you can also right-click it to add a **3D Part**, **2D Part**, or **1D Part**. To parameterize the geometry part you can use global parameters and input parameters (arguments), which you add in the **Part** node's **Settings** window (see Geometry Part Settings). You can also add local parameters using a **Local Parameters** subnode (see Local Parameters).

Within the part you can use parameters in expressions, just like you use global parameters in a geometry sequence. If an input parameter or a local parameter has the same name as a global parameter, the input parameter or local parameter is used; that is, the global parameter is shadowed within the part. You add geometry features to the part as usual. There is also a **View** node with view settings (see User-Defined Views) below the geometry feature nodes. When defining a geometry part, you can specify colors for the selections in the same way as for other geometry sequences. These color settings will then be transferred to the part instances selections.

LOADING GEOMETRY PARTS

You can load one or more geometry parts from a Model MPH-file, which can contain a number of parts and serve as a part library (see Part Libraries):

- In the **Geometry** ribbon toolbar, **Parts** menu, click **Load Parts** ( ), or
- Right-click the **Global Definitions** node, and then, from the **Geometry Parts** submenu, select **Load Parts** ( ) (or, if it exists, right-click the global **Geometry Parts** node ( ) and select **Load Parts** ( ) from the context menu).

Then, in the **Load Part** window that opens, browse to a filename and click **Open**. The file is scanned for geometry parts. It is not possible to load a part that is linked into the MPH-file. Such a part should be linked directly from the MPH-file where it is defined. If there is just one linkable part, it is added under the **Geometry Parts** node. If the file contains more than one linkable parts, a **Load Part** dialog box opens. Select one or more parts from the list of available parts. Finally click **OK**. The selected parts are added under the **Geometry Parts** node. For information about the settings for these loaded geometry parts, see Loaded Part Settings.

If the parts contain references to global user-defined functions or parameters, those functions and parameters are also inserted in the model under the **Global Definitions** node. If a function or parameter with the same name already exists in the model, that function or parameter is not copied from the MPH-file.

You cannot modify loaded parts, and their definitions are not displayed in the model tree. If you want to modify a loaded part or see its definitions, open the MPH-file in which the part is defined.

To update a loaded part that has been modified in the MPH-file, click the **Reload** button in the **Settings** window's **File** section. If the name or the location of the MPH-file has been changed, you can modify the path directly using the **Filename** field or set the new filename using the **Browse** button. Click the **Replace from Library** button to replace the loaded part with one that is a part in the Part Libraries.

You can call loaded parts from geometry sequences in the same way as ordinary parts.

CREATING AN INSTANCE OF A GEOMETRY PART

In a geometry sequence or part, you can create an instance of a geometry part by right-clicking the **Geometry** node and selecting a part from the **Geometry Parts** menu. This adds a **Part Instance** node ( ), whose purpose is to build an instance of the part with new values of its input parameters (arguments). You can also change the position and orientation of the resulting part instances. See Part Instance for details.

A **Part Instance** node can optionally make an instance of a local part instead of a part under **Global Definitions>Geometry Parts**. To use a local part, select **Local part** from the **Part** list in the **Settings** window for a **Part Instance** node. In this case, the local part appears beneath the **Part Instance** node as a **Local Part** subnode.

DEBUGGING A GEOMETRY PART

Sometimes you want to inspect what happens when you build an instance of a part. To do so, right-click the **Part Instance** node ( ), and select **Step Into** ( ). This builds all preceding features and shows a copy of the called part beneath the **Part Instance** node. The copy is identical to the part, except that the input parameters have different values. You can now build features in the copy. You can also try out modifications in the copy. You can then apply the modifications in the part.

	When you build the Part Instance, you lose the changes you have made in the copy. If you want to keep your changes, switch to using a local sequence by selecting **Local part** in the **Part** list.

If an error occurs when you build the Part Instance, a copy of the called part appears automatically so that you can locate the error.

Geometry Part Settings

Under a **Part** node or **Local Part** node you define and create a geometry sequence with geometric primitives and features as subnodes. The **Settings** window for a **Part** node is identical to the **Settings** window for a corresponding **Geometry** node of the same dimension, except that there is an **Input Parameters** section and no **Automatic rebuild** check box (see The Geometry Node). There is also a special setting for part variants in the **Advanced** section (see below).

INPUT PARAMETERS

Enter the names of the input parameters (arguments) in the **Name** column. In the **Default expression** column, enter their default values as expressions in terms of global parameters and numerical values. The corresponding values appear in the **Value** column. Optionally, enter descriptions for the input parameters in the **Description** column. Use the **Move Up** ( ), **Move Down** ( ), and **Delete** ( ) buttons to organize the list. Click the **Save to File** button ( ) and the **Load from File** button ( ) to save and load parameters to and from a text file. When saving to Excel, an **Excel Save** dialog box appears where you can specify the sheet and range and whether to overwrite existing data, include a header, use a separate column for units, or include the calculated values for the parameters. Click the **Insert Expression** button ( ) or press Ctrl+Space to insert an available or applicable expression such as a global parameter.

	Parameters that are used within the part but should not be specified by users of the part, should instead be entered in the Local Parameters node, which you can add by right-clicking the part node and choosing **Local Parameters**.

ADVANCED

Select the **Show as variant in part library** check box to create a part variant; that is, the part is one of two or more variants of the same geometry part. You can use this functionality to make it possible to choose variants of a part instead of different separate geometry parts. Parts in the same MPH-file that are not variants are not visible for users of the part library. It can be a part that creates the basic part for which the part variants provide transformation of the input parameters, for example. When you add a part from an MPH-file that includes variants, a **Select Part Variant** window appears, where you can choose the variant that you want to use.

Loaded Part Settings

A loaded **Part** node contains a link to a geometry part in another MPH-file and has no subnodes. The **Settings** window for a loaded **Part** node includes the following sections:

FILE

In the **File** section you specify the location of the part that you load:

- A **Filename** field where you specify the path and filename to the Model MPH-file with the part that you are loading. Click **Browse** to search for a Model MPH-file with at least one part on the file system. The part that you load is displayed under **Part**. This **Filename** field is set to the Model MPH-file that you selected with the **Load Part** command.
- Click **Reload** to load the current version of the part in the other Model MPH-file if necessary.
- Click **Replace from Library** to open the **Part Libraries** window and choose a compatible geometry part that you then link to instead, replacing the current link.

PART

This section includes the label and tag of the part that you link to.

DESCRIPTION

This section contains a description of the part, if available.

THUMBNAIL

For parts loaded from a part library shipped with COMSOL Multiphysics or any of the add-on modules, or other parts that include a thumbnail image, that associated descriptive image of the part appears here.

VERSION

This section contains version information for the part at the time when it was linked in the model: a version number and the date and time for when it was last modified.

Local Parameters

You can right-click a **Part** node to add a **Local Parameters** subnode (P_i). There can be at most one such subnode for each **Part** node. In the **Local Parameters** subnode you can add parameters that are locally available for that particular geometry part (in addition to global parameters, which are also available). The **Settings** window is identical to the one for a global **Parameters** node (see Parameters).

Part Libraries

Introduction

The *Part Libraries* contain collections of geometry parts, which serve as extended geometric primitives or parameterized geometry sequences specially created for an application area. These parts are stored as *part models*, which are COMSOL MPH files that contain only the following:

- One or several geometry parts. The first part is the *main part*, and it is the only one that the user of the part model will see. Other parts can exist for the sole purpose to be called from the main sequence.
- Optionally, a number of global functions that are used by the part.

A part model does not contain materials, mesh, or physics.

Some specialized part libraries ship with the COMSOL products, but you can also add your own part libraries. In COMSOL Multiphysics, you have access to a library with parts for creating any of the five Platonic solids (cube, tetrahedron, octahedron, dodecahedron, or icosahedron), a bent or a straight pipe, a propeller with constant pitch, or a random flat surface. Input parameters make it possible to create instances of these parts with varying dimensions and layout.

Using Part Libraries

THE PART LIBRARIES

The **Part Libraries** window ( ) (Figure 7-2) contains sets of parts that you can use as custom geometric parts representing common parts or components within an application area. Some of the add-on modules include their own part libraries with parts adapted for use within their respective application areas. The location of the corresponding MPH-files is, for the Ray Optics Module, for example,
`C:\Program Files\COMSOL\COMSOL55\Multiphysics\parts\Ray_Optics_Module`

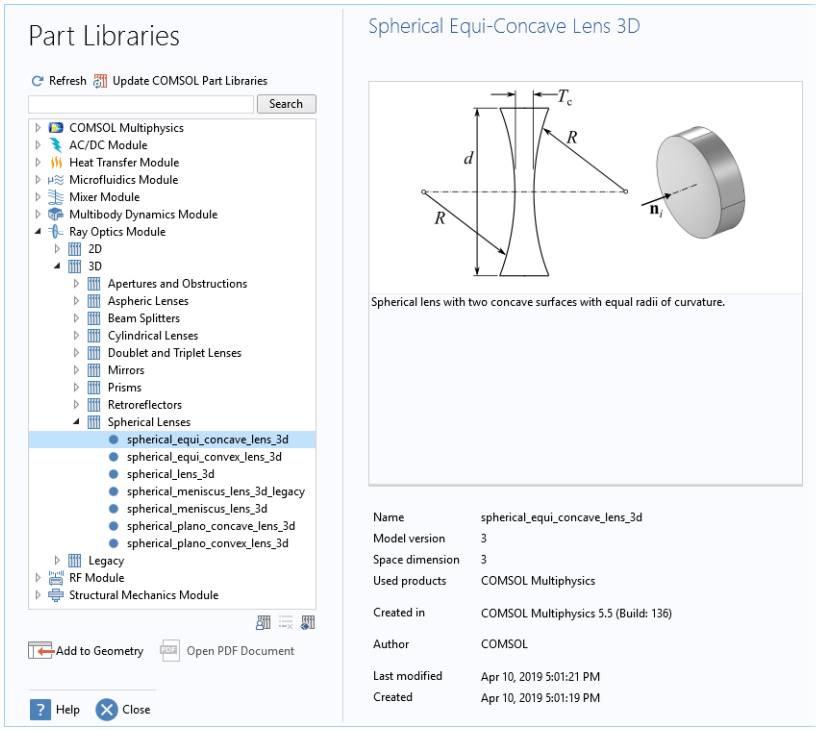

Figure 7-2: The Part Libraries window with a Spherical Equi-Concave Lens 3D part from the Ray Optics Module selected.

Browse through the **Part Libraries** tree to see what parts are available for your license. Click to highlight the part in the tree and show a schematic and some information about it to the right, or search for a specific model.

Some parts have an associated documentation file in PDF format. For those parts, you can access this document as follows:

- Click to highlight the name in the tree, then click **Open PDF Document**.
- Right-click the name, then from the context menu select **Open PDF Document**.

!	You can enable the **Open PDF Document** button for a user-library part by placing a PDF-file with the same name as the MPH-file in the same folder.

Opening the Part Libraries Window

You can open the **Part Libraries** window ( ) in the following ways:

- By right-clicking the **Geometry** node ( ) and choosing **Parts>Part Libraries**.
- By right-clicking the **Global Definitions** node ( ) and choosing **Geometry Parts>Part Libraries**.
- By right-clicking the **Geometry Parts** node ( ) and choosing **Part Libraries**.
- By choosing **Part Libraries** from the **Parts** menu in the **Other** section in the **Geometry** toolbar.
- By choosing **Part Libraries** from the **Windows** menu in the **Home** toolbar.
- By clicking **Choose from Library** in a **Part Instance** node's **Settings** window.
- If you have added a linked part, by clicking **Replace from Library** in a **Linked Part** node's **Settings** window.

You can set the root directory and create and remove a user-defined part library using The Preferences Dialog Box as described next.

PART LIBRARIES PREFERENCES

The following settings can be modified using the buttons at the bottom of the **Part Libraries** tree on the **Part Libraries** page in The Preferences Dialog Box and — if the **Allow managing libraries in the Part Libraries window** check box on that page is selected (the default) — also in the **Part Libraries** window itself.

Adding a User Part Library

To create a user part library, create the part under **Global Definitions>Geometry Parts** and then save the MPH file in the intended **User Part Library** folder. The parts in the user part library can then be added from that library when it is added to the **Part Libraries** window.

Click the **Add User Library** button ( ) to add customized folders. In the **User Part Library** tree in the **Browse for Folder** dialog box, navigate to a location on your computer where you want to create a custom part library folder. Or click **Make New Folder**. Click **OK** to save the changes and exit, or **Cancel** to exit without saving.

	It is not possible to add a library identical to, containing, or being contained in, any already used library.

Optionally, you can replace the standard folder icon ( ) with custom icons of your choice that reflect the content of your library folders. To use a custom icon for a folder, create a PNG-file with an image size of 16-by-16 pixels and save it in the folder under the name folder.png.

Set the Part Library Root

Click the **Set Library Root** button ( ) to edit or set the root folder. This redirects COMSOL Multiphysics to a different folder where customized geometry models can be stored.

In the **Part Library Root** tree in the **Browse for Folder** dialog box, navigate to the new root folder location or click **Make New Folder**. Click **OK** to save the changes and exit, or **Cancel** to exit without saving.

Remove Selected Part Library

This button is enabled after a User Part Library folder is created. Click any folder corresponding to a user part library, and then the click **Remove Selected** ( ) button to remove it from the part libraries.

OPENING AND ADDING A PART IN COMSOL MULTIPHYSICS

Once you have located the part you want to add to the geometry — for example, you used a search and it was successful (see Searching the Part Libraries), or you browsed the Part Libraries tree — then to use the part:

- Double-click the part in the tree.
- Select the part, then click ( ) **Add to Geometry** if opened from the **Geometry** branch or **Add to Model** if opened from the **Global Definitions** branch.
- Right-click the part, then from the context menu select **Add to Geometry** if opened from the **Geometry** branch or **Add to Model** if opened from the **Global Definitions** branch.

The part then appears as a **Loaded Part** node under **Parts** ( ) and also, if added to a geometry, in a **Part Instance** node ( ) under the **Geometry** node in the **Component**. That **Part Instance** node calls the loaded part to create an instance of the part with the input parameters that you define under **Input Parameters** in the **Part Instance** node's **Settings** window, when you build that node or all objects in the geometry.

When you replace a part in a loaded part, you click or select **Replace in Model** instead.

	The part is added to the current component (the one that appears in the Graphics window). The part can only be added if it has the same space dimension as the current component.

When using a part in 3D, you can position it by matching a work plane in the part with a work plane in your model using the settings in under **Position and Orientation of Output** in the **Part Instance** node's **Settings** window (see Part Instance).

SEARCHING THE PART LIBRARIES

You can **Search** the part libraries to find parts. For example, enter all or part of the part name or any other phrase or words and click **Search**.

By default, the search includes all words in the **Search** field.

	COMSOL Multiphysics part models are named using an underscore between words (for example, *straight_pipe*) because the part model name is also the name of the corresponding MPH-file. The underscore is required to form a valid filename, so it is recommended that you, if you are not sure of the full name, enter only the first word in the **Search** field when searching for a part name.

SEARCH PARAMETERS

- To search for part models by filename only, use the prefix "@name:", for example `@name:straight_pipe`. You can also use the wildcard character '*' at the beginning and the end of the search expression, for example `@name:*pipe`.
- To search for a specific built-in geometric primitive or feature, use the scoping syntax `@geom:`*<name>*. For example, enter `@geom:rot` to find all part models that include rotations. Note, however, that the geometry features for a geometry model are part of the implementation and not directly visible.
- To search for a phrase, enclose it in quotation marks (for example, `"bent pipe"`). The words can be part of the part model's name or description.

If the search does not return any results, the Part Libraries window contains the message **No Matching Model Found**. Click the **Refresh** button ( ) under the tree to return to the root **Part Libraries** folder list.

Creating a Part

Following these steps to create a part that you can store in a part library and use as a part or specialized geometric primitive:

1. Start the COMSOL Desktop with a blank model.
2. Right-click the **Global Definitions** node, and from the **Geometry Parts** submenu, choose **3D Part**, **2D Part**, or **1D Part** to add a **Part** node for a 3D, 2D, or 1D geometry. You can also choose **Create Part** from the **Parts** menu in the **Other** section of the **Geometry** toolbar to create a **Part** node of the same space dimension as the current component in the model.
3. In the **Part** node's **Settings** window, give it an appropriate label. Also choose an appropriate length unit. If you want the part model to be available to users without a license for the CAD Import Module, make sure to choose **COMSOL kernel** from the **Geometry representation** list under **Advanced**.
4. In the **Input Parameters** table, add input parameters with appropriate names, default values, and descriptions. Use standardized input parameter names for all parts in a part library. This makes automatic matching work when a user substitutes one part for another; that is, the values of input parameters with the same name are kept. In the **Default expression** column, prefer to indicate the unit because this helps the user to understand what is expected. The default expression then also determines what unit to use if the user just enters a number when calling the part.
5. If you need to use local parameters (having a fixed value or depending on the input parameters), add a **Local Parameters** node under the **Part** node and add the local parameters in its **Settings** window.

6 Add geometry features for the part and build all of them. This geometry sequence can result in one or several geometry objects. If there is no specific reason to have several objects, make sure that there is just one object — for example, using a Union feature. Using a Union feature also has the advantage that the numbering of the entities in the resulting object is canonized (basically, the numbering increases from left to right in the x-coordinate).

7 Add selection features (typically Explicit Selection nodes) in the part for selections of boundaries that are relevant to users of the geometry model. Preferably, the boundary selections should be a partition of the boundaries; that is, they should not intersect and they should together cover all boundaries. In some cases, domain, edge, and point selections are also relevant. Make sure to give each selection an appropriate label. Use standardized labels in all parts in a part library (for example, Inflow, Outflow, and Wall). Doing so makes automatic matching of selections work when a user substitutes one part for another.

8 In 3D, add Work Plane features (with empty Plane Geometry subnodes) for important planes. Users can then use these to position the resulting objects when calling the part. Usually, you use face parallel work planes with the local coordinate system's origin at the center of the face (and outward normal vectors). You can control the position of the work plane's coordinate system in the **Local Coordinate System** section:

- For inflow boundaries, use an inward-pointing normal vector.
- For outflow boundaries, use an outward-pointing normal.
- For boundaries that can be both inflow or outflow boundaries, use an outward-pointing normal.

Give each work plane feature an appropriate label. Use standardized labels in all parts in a part library. Doing so makes automatic matching of work planes work when a user substitutes one part for another.

9 Click the **Build All** button.

10 Run a **Compact History** command (from the **File** menu) to save some space in the MPH-file.

11 Set the model thumbnail image by clicking the **Set from Graphics Window** button in the root node's **Settings** window. If you want to use an image processor to, for example, add dimension arrows showing the meaning of the input parameters, then use the **Load from File** button instead to choose a file with the image to use as the thumbnail.

12 Open the root node's **Properties** window and set **Application version** to 1. You might also add an **Author**.

13 Save the model using an appropriate filename.

Geometric Primitives

The geometric primitives provide building blocks of basic geometric shapes for creating geometries in 1D, 2D, and 3D. The features in Table 7-3 are also available as buttons on The Geometry Toolbar, sometimes from the **More Primitives** (3D, 2D, or 1D) menu. You can combine and operate on all geometric primitives using Boolean operations and other Geometry Operations.

TABLE 7-3: 1D, 2D, AND 3D GEOMETRY PRIMITIVES AND GEOMETRY TOOLBAR BUTTONS

BUTTON	NAME	SPACE DIMENSION	BUTTON	NAME	SPACE DIMENSION
	Bézier Polygon	2D, 3D		Interval	1D
	Block	3D		Line Segment	2D, 3D
	Circle	2D		Parametric Curve	2D, 3D
	Circular Arc	2D		Parametric Surface	3D
	Composite Curve	2D		Point	1D, 2D, 3D
	Cone	3D		Polygon	2D, 3D
	Cubic Bézier	2D, 3D		Pyramid	3D
	Cylinder	3D		Quadratic Bézier	2D, 3D
	Eccentric Cone	3D		Rectangle	2D
	Ellipse	2D		Sphere	3D
	Ellipsoid	3D		Square	2D
	Helix	3D		Tetrahedron	3D
	Hexahedron	3D		Torus	3D
	Interpolation Curve	2D, 3D			

If you want to refer to the domains, boundaries, edges, or points (geometric entities) in the Component, COMSOL Multiphysics can create selections for all geometric entities that a geometric primitive consists of. It is also possible to create selections in the geometry nodes for the resulting geometry objects from such operations. See Creating Selections From Geometric Primitives and Operations. For some geometric primitives (blocks and spheres, for example) you can add layers for creating, for example, sandwich structures or layers of concentric spheres. For many properties, press Ctrl+Space to access global parameters and built-in constants that you can use, for example, to define the dimensions of a geometric primitive. Also see Part Libraries for information about geometry models that can serve as specialized geometric primitives.

The **Selections of Resulting Entities** section in the settings for 2D geometry objects under a **Plane Geometry** node in a work plane is different from the section as described below. See Plane Geometry.

Bézier Polygon

A **Bézier Polygon** ( ) consists of a sequence of connected line segments, quadratic Bézier curves (for example, circular arcs), and cubic Bézier curves. See About Rational Bézier Curves below for some information about Bézier curves in general.

	It is no longer possible to create a Bézier Polygon feature from the user interface. You can get it by loading a model created in a version older than 5.5 or by using the API.

GENERAL

From the **Type** list, select **Solid**, **Closed curve**, or **Open curve** to specify if the Bézier polygon is a solid object (only available in 2D) or a closed or open curve object. If you choose **Solid** or **Closed curve**, the software automatically adds a line segment if needed to close the polygon.

	When using the Geometry toolbar, the **Solid** button ( ) is available to toggle between drawing a solid object or an outline (or curve) instead of selecting a **Type**. See Geometry Drawing Toolbar Buttons for other drawing toolbar buttons.

POLYGON SEGMENTS

Define the Bézier polygon by adding curve segments to the list of segments. Choose linear segments, quadratic segments, or cubic segments. Delete segments by selecting them and clicking **Delete**. To edit a segment, select it in the list. When editing the last segment, click **Close Curve** to make the last control point coincide with the first control point of the first segment.

Linear Segments

To add a linear segment, click **Add Linear**. Specify the start of the linear segment on the first row of coordinates under **Control points**. Specify the end of the linear segment on the second row of coordinates.

Quadratic Segments

To add a quadratic segment, click **Add Quadratic**. Specify the coordinates of the three control points on rows under **Control points**. Add the weights of the control points under **Weights**. The default weights — 1, $1/(\sqrt{2})$, and 1 — correspond to a circular arc if the control points are three corners of a square.

Cubic Segments

To add a cubic segment, click **Add Cubic**. Specify the coordinates of the four control points on each row under **Control points**. Add the weights of the four control points under **Weights**. Cubic segments with self-intersections might look correct when displayed but are not handled correctly by other geometry and meshing operations.

COORDINATE SYSTEM

The coordinate system in which the segment coordinates above are interpreted. From the **Work plane** list, select **xy-plane** (the default, for a standard global Cartesian coordinate system) or select any work plane defined above this node in the geometry sequence. If you choose a work plane, the work plane and its coordinate system appear in the Graphics window, using an extra coordinate triad with the directions **xw**, **yw**, and **zw** (which are then used to specify the control points' location).

SELECTIONS OF RESULTING ENTITIES

Select the **Resulting objects selection** check box to create predefined selections (for all levels — objects, domains, boundaries, edges, and points — that are applicable) in subsequent nodes in the geometry sequence. To also make all or one of the types of resulting entities (domains, boundaries, edges, and points) that the Bézier polygon consists of available as selections in all applicable selection lists (in physics and materials settings, for example), choose an

option from the **Show in physics** (**Show in instances** if in a geometry part; **Show in 3D** in a plane geometry under a work plane in a 3D component) list: **All levels**, **Domain selection** (2D only), **Boundary selection** (2D only), **Edge selection** (3D only), or **Point selection**. The default is **Domain selection** in 2D and **Edge selection** in 3D. These selections do not appear as separate selection nodes in the model tree. Select **Off** to not make any selection available outside of the geometry sequence. From the **Color** list, choose a color for highlighting the resulting objects selection. See Selection Colors.

Cumulative Selection

If you want to make the resulting entities contribute to a cumulative selection, select a cumulative selection from the **Contribute to** list (the default, **None**, gives no contribution), or click the **New** button to create a new cumulative selection (see Cumulative Selections).

ABOUT RATIONAL BÉZIER CURVES

A rational Bézier curve is a parameterized curve of the form

$$\mathbf{b}(t) = \frac{\sum_{i=0}^{p} \mathbf{b}_i w_i B_i^p(t)}{\sum_{i=0}^{p} w_i B_i^p(t)}, 0 \le t \le 1$$

where the functions

$$B_i^p(t) = \binom{p}{i} t^i (1-t)^{p-i}$$

are the *Bernstein basis* functions of *degree* p; $\mathbf{b}_i = (x_1, \ldots, x_n)$ are the control points of the n-dimensional space; and w_i are the weights, which should always be nonnegative numbers. The endpoint interpolation property corresponds to $\mathbf{b}(0) = \mathbf{b}_0$ and $\mathbf{b}(1) = \mathbf{b}_p$. Another useful property of the rational Bézier curves is that the direction of the tangent vector at $t = 0$ and $t = 1$ is determined by the vectors $\mathbf{b}_1 - \mathbf{b}_0$ and $\mathbf{b}_p - \mathbf{b}_{p-1}$, respectively. That is, the curve is always tangent to the line connecting the control points $\mathbf{b}_0$ and $\mathbf{b}_1$ and the line connecting $\mathbf{b}_{p-1}$ and $\mathbf{b}_p$. When joining curves at endpoints, aligning the (nonzero) tangent vectors assures tangential continuity. This technique produces visually smooth transitions between adjacent curves.

Quadratic Curves (Conic Sections)

Rational Bézier curves of degree 2 can represent all conic sections: circles, ellipses, parabolas, and hyperbolas. Elliptical or circular curve segments are often called arcs. The conic sections are also called quadric curves or *quadrics*. Because the parameter t is constrained to be in the interval [0, 1], only a segment of the conic section is represented. A 2nd degree curve consists of three control points and three weights. There is a simple rule for classifying a 2nd degree curve if the endpoint weights are set to 1, only allowing the central weight w_1 to vary: if $w_0 = w_2 = 1$, then $0 < w_1 < 1$ gives ellipses, $w_1 = 1$ gives parabolas, and $w_1 > 1$ gives hyperbolas. For a fixed control polygon, at most one value of w_1 (among the ellipses generated by letting $0 < w_1 < 1$) gives a circle segment. For example, a quarter of a full circle is generated by a control polygon with a right angle and with a central weight of $1/\sqrt{2}$.

Cubic Curves

Rational Bézier curves of degree 3 (cubic curves) have more dynamic properties than conic section curves. A cubic curve has four control points and four weights, making it possible to create a self-intersecting control polygon or a zigzag control polygon. A self-intersecting polygon can give rise to a self-intersecting curve (loop). Self-intersecting curves and cusps are not supported.

A zigzag control polygon generates an S-shaped curve containing a point of inflection where the tangent line lies on both sides of the curve.

Block

To create a block (box), on the 3D **Geometry** toolbar, click **Block** ( ). You can also right-click the **Geometry** node to add this node from the context menu. Then enter the properties of the block using the following sections:

OBJECT TYPE

From the **Type** list, select **Solid** or **Surface** to specify if the block is a solid object or a (hollow) surface object.

SIZE AND SHAPE

Define the edge lengths in the **Width**, **Depth**, and **Height** fields. With the default axis (representing the z-axis) and no rotation, the width, depth, and height correspond to the dimensions in the x, y, and z directions, respectively.

POSITION

Enter the position of the block using the **x**, **y**, and **z** fields. From the **Base** list, choose **Center** if the block is centered about the position, or choose **Corner** if the block has one corner in this position.

AXIS

Specify the direction of the block's third axis — that is, the direction of the edges corresponding to the height. From the **Axis type** list, choose **x-axis**, **y-axis**, or **z-axis** (the default) to obtain an axis aligned with the specified coordinate axis. Choose **Cartesian** to enter a direction vector in the **x**, **y**, and **z** fields. Choose **Spherical** to enter the direction using the angles **theta** (polar, zenith) and **phi** (azimuth).

ROTATION ANGLE

Specify the rotational angle about the block's third axis in the **Rotation** field. When this angle is zero (the default), the block's second axis is parallel to the xy-plane.

COORDINATE SYSTEM

The coordinate system in which the position, axis, and rotation angles above are interpreted. From the **Work plane** list, select **xy-plane** (the default, for a standard global Cartesian coordinate system) or select any work plane defined above this node in the geometry sequence. If you choose a work plane, the work plane and its coordinate system appear in the Graphics window, using an extra coordinate triad with the directions **xw**, **yw**, and **zw** (which are then used to specify the block's position).

LAYERS

Layers can be used to create sandwich primitives by adding layers on one or more sides. Specify the thicknesses of layers in the **Layers** table, and optionally a name for each layer. The outermost layer comes first. Select the check boxes under **Layer position** to specify where to apply the layers (see the graphics to the right of the check boxes to see the definitions of the left, right, front, back, bottom, and top sides of the block). Each layer must have a minimal thickness (depending on the size of the geometry).

SELECTIONS OF RESULTING ENTITIES

Select the **Resulting objects selection** check box to create predefined selections (for all levels — objects, domains, boundaries, edges, and points — that are applicable) in subsequent nodes in the geometry sequence. To also make all or one of the types of resulting entities (domains, boundaries, edges, and points) that the block consists of available as selections in all applicable selection lists (in physics and materials settings, for example), choose an option from the **Show in physics** (**Show in instances** if in a geometry part) list: **All levels**, **Domain selection**, **Boundary selection**, **Edge selection**, or **Point selection**. The default is **Domain selection**, which is suitable for use with materials and physics defined in domains. For use with a boundary condition, for example, choose **Boundary selection**. These

selections do not appear as separate selection nodes in the model tree. Select **Off** to not make any selection available outside of the geometry sequence. From the **Color** list, choose a color for highlighting the resulting objects selection. See Selection Colors.

Cumulative Selection

If you want to make the resulting entities contribute to a cumulative selection, select a cumulative selection from the **Contribute to** list (the default, **None**, gives no contribution), or click the **New** button to create a new cumulative selection (see Cumulative Selections).

Circle

To create a circle or disk, you can:

- Right-click the 2D **Geometry** node and add a **Circle** node to the sequence, then define it in the **Settings** window, or
- On the 2D **Geometry** toolbar **Draw** group, from the **Circle** ( ) menu, select **Circle** ( ) or **Circle (Corner)** ( ). Then draw the circle in the Graphics window. Also see Drawing Geometric Primitives in the Graphics Window.

	To draw a circle for a 2D model, click Circle or Circle (Corner). Then, click the circle's center (or one corner of the circle's bounding box) in the Graphics window. Drag the mouse to the desired position of a corner of the circle's bounding box. When you release the mouse button, a solid circle appears, and a Circle node appears in the geometry sequence.

When you have added a node or finished drawing the circle in the Graphics window, you can use the following section to define it or fine tune it.

OBJECT TYPE

From the **Type** list, select **Solid** or **Curve** to specify if the circle is a solid object (disk) or a curve object.

	When using the geometry toolbar, the **Solid** button ( ) is available to toggle between drawing a solid object or an outline (or curve) instead of selecting an **Object Type**. See Geometry Drawing Toolbar Buttons for other drawing toolbar buttons.

SIZE AND SHAPE

Define the circle's radius in the **Radius** field. Enter a sector angle (in degree) for a circle sector in the **Sector angle** field. The default value is 360 degrees for a full circle.

POSITION

Enter the position of the circle using the **x** and **y** fields (**r** and **z** in 2D axial symmetry, **xw** and **yw** in work planes). From the **Base** list, choose **Center** if the circle is centered about the position, or choose **Corner** if a surrounding box has a corner at the position.

ROTATION ANGLE

Specify the counterclockwise rotational angle about the position in the **Rotation** field. The default angle is 0 degrees.

LAYERS

Layers can be used to create sandwich primitives by adding several concentric circles. You specify the thicknesses of layers in the **Layers** table, and optionally a name for each layer. The outermost layer comes first. Each layer must have a minimal thickness (depending on the size of the geometry).

SELECTIONS OF RESULTING ENTITIES

Select the **Resulting objects selection** check box to create predefined selections (for all levels — objects, domains, boundaries, and points — that are applicable) in subsequent nodes in the geometry sequence. To also make all or one of the types of resulting entities (domains, boundaries, edges, and points) that the circle consists of available as selections in all applicable selection lists (in physics and materials settings, for example), choose an option from the **Show in physics** (**Show in instances** if in a geometry part; **Show in 3D** in a plane geometry under a work plane in a 3D component) list: **All levels**, **Domain selection**, **Boundary selection**, or **Point selection**. The default is **Domain selection**, which is suitable for use with materials and physics defined in domains. For use with a boundary condition, for example, choose **Boundary selection**. These selections do not appear as separate selection nodes in the model tree. Select **Off** to not make any selection available outside of the geometry sequence. From the **Color** list, choose a color for highlighting the resulting objects selection. See Selection Colors.

Cumulative Selection

If you want to make the resulting entities contribute to a cumulative selection, select a cumulative selection from the **Contribute to** list (the default, **None**, gives no contribution), or click the **New** button to create a new cumulative selection (see Cumulative Selections).

Circular Arc

A circular arc is a curve object in 2D having a single circular edge. To create a circular arc, you can:

- Right-click the 2D **Geometry** node and add a **Circular Arc** node ( ) to the sequence, then define it in the **Settings** window, or
- On the 2D **Sketch** toolbar **Draw** group, from the **Circular Arc** ( ) menu, select **Start, Center, Angle** ( ); **Start, Tangent, End** ( ); or **Start, Middle, End** ( ). Then draw the circle in the Graphics window by defining points according to the selected properties for a circular arc. Also see Drawing Geometric Primitives in the Graphics Window.

If desired, enter the properties of the circular arc using the following sections:

PROPERTIES

For flexibility, the **Settings** window contains more properties than needed, and these properties are automatically kept consistent when you change a property. The **Specify** list determines a set of independent properties that are sufficient to specify:

TABLE 7-4: PRINCIPAL PROPERTIES TO SPECIFY FOR A CIRCULAR ARC

VALUE	PRINCIPAL PROPERTIES
Center, radius, angles	Center, Radius, Start angle, End angle, Clockwise
Endpoints and radius	Starting Point, Endpoint, Radius, Clockwise, Short arc
Endpoints and start angle	Starting Point, Endpoint, Start angle, Clockwise
Endpoints and end angle	Starting Point, Endpoint, End angle, Clockwise

CENTER

Enter the center coordinates for the circular arc in the **x** and **y** fields (SI unit: m).

STARTING POINT

Enter the starting point for the circular arc in the **x** and **y** fields (SI unit: m).

ENDPOINT

Enter the endpoint for the circular arc in the **x** and **y** fields (SI unit: m).

RADIUS

Enter the radius of the circular arc in the **x** and **y** fields (SI unit: m).

ANGLES

Enter the start and end angles for the circular arc in the **Start angle** and **End angle** fields, respectively (unit: deg).

By default, the angles are counted clockwise. Clear the **Clockwise** check box to make the angles count in a counterclockwise direction.

The **Short arc** check box is enabled when **Principal properties** is set to **Endpoints and radius**. When selected, the arc will span at most 180 degrees.

SELECTIONS OF RESULTING ENTITIES

	This section is not available if the **Circular Arc** node is a subnode under a **Composite Curve** node.

Select the **Resulting objects selection** check box to create predefined selections (for all levels — objects, domains, boundaries, edges, and points — that are applicable) in subsequent nodes in the geometry sequence. To also make all or one of the types of resulting entities (domains, boundaries, edges, and points) that the cone consists of available as selections in all applicable selection lists (in physics and materials settings, for example), choose an option from the **Show in physics** (**Show in instances** if in a geometry part) list: **All levels**, **Domain selection**, **Boundary selection**, **Edge selection**, or **Point selection**. The default is **Domain selection**, which is suitable for use with materials and physics defined in domains. For use with a boundary condition, for example, choose **Boundary selection**. These selections do not appear as separate selection nodes in the model tree. Select **Off** to not make any selection available outside of the geometry sequence. From the **Color** list, choose a color for highlighting the resulting objects selection. See Selection Colors.

Cumulative Selection

If you want to make the resulting entities contribute to a cumulative selection, select a cumulative selection from the **Contribute to** list (the default, **None**, gives no contribution), or click the **New** button to create a new cumulative selection (see Cumulative Selections).

Composite Curve

A **Composite Curve** feature defines a 2D curve object having several edges of different types. It has a sequence of subnodes (child features) of the **Polygon**, **Circular Arc**, **Interpolation Curve**, **Quadratic Bézier**, and **Cubic Bézier** types. The child features always form a connected curve chain (open or closed). You can create a **Composite Curve** feature node ( ) in the following ways:

- Draw a sequence of curve segments in the Graphics window using the **Polygon**, **Circular Arc**, **Interpolation Curve**, **Quadratic**, and **Cubic** toolbar buttons on the **Sketch** toolbar.
- Select a number of edges in the Graphics window and click the **Composite Curves** toolbar button ( ) on the **Sketch** toolbar.
- Select a number of curve features in the model tree, right-click, and select **Composite Curves** from the context menu.

OBJECT TYPE

By default, the **Object type** list is set to **Curve**. If you choose **Solid** from the **Object type** list, a closed composite curve will give a solid geometry object.

SELECTIONS OF RESULTING ENTITIES

Select the **Resulting objects selection** check box to create predefined selections (for all levels — objects, domains, boundaries, edges, and points — that are applicable) in subsequent nodes in the geometry sequence. To also make all or one of the types of resulting entities (domains, boundaries, edges, and points) that the cone consists of available as selections in all applicable selection lists (in physics and materials settings, for example), choose an option from the **Show in physics** (**Show in instances** if in a geometry part) list: **All levels**, **Domain selection**, **Boundary selection**, **Edge selection**, or **Point selection**. The default is **Domain selection**, which is suitable for use with materials and physics defined in domains. For use with a boundary condition, for example, choose **Boundary selection**. These selections do not appear as separate selection nodes in the model tree. Select **Off** to not make any selection available outside of the geometry sequence. From the **Color** list, choose a color for highlighting the resulting objects selection. See Selection Colors.

Cumulative Selection

If you want to make the resulting entities contribute to a cumulative selection, select a cumulative selection from the **Contribute to** list (the default, **None**, gives no contribution), or click the **New** button to create a new cumulative selection (see Cumulative Selections).

Cone

To create a right circular cone or cone frustum (conical frustum, truncated cone), on the 3D **Geometry** toolbar, click **Cone** ( ). By adding a **Cone** feature you can create the part of a cone contained between two circular bases without going through an apex. You can also right-click the **Geometry** node to add this node from the context menu. Enter the properties of the cone using the following sections:

OBJECT TYPE

From the **Type** list, select **Solid** or **Surface** to specify if the cone is a solid object or a (hollow) surface object.

SIZE AND SHAPE

Define the size and shape of the cone in the **Bottom radius**, **Height**, **Specify top size using**, and **Top radius** or **Semiangle** fields.

From the **Specify top size using** list select **Radius** (the default setting) to specify the cone top size using the **Top radius** field. The top radius must be a positive value or 0 for a cone with a sharp apex. Alternatively, from the **Specify top size using** list select **Angle** to specify the cone top size using the **Semiangle** field. The semiangle is the angle a cone makes with the vertical axis. The default semiangle is roughly 26.565 degrees (that is, arctan(1/2)), which for the default cone with a bottom radius and height of 1 makes the radius of the top base 0.5. For the default radius and height the maximum semiangle is 45 degrees (for a cone with a sharp apex). The maximum semiangle depends on the values for the radius and height. The semiangle must be larger than –90 degrees. Setting the semiangle to 0 makes the cone into a cylinder.

POSITION

Enter the position of the cone using the **x**, **y**, and **z** fields. This is the center of the bottom circle.

AXIS

Specify the direction of the cone's axis. From the **Axis type** list, choose **x-axis**, **y-axis**, or **z-axis** (the default) to obtain an axis aligned with the specified coordinate axis. Choose **Cartesian** to enter a direction vector using the **x**, **y**, and **z** fields. Choose **Spherical** to enter the direction using the angles **theta** (polar, zenith) and **phi** (azimuth).

ROTATION ANGLE

Specify the rotational angle about the axis in the **Rotation** field. When this angle is zero (the default), the second axis of the cone's local coordinate system is parallel to the *xy*-plane.

COORDINATE SYSTEM

The coordinate system in which the position, axis, and rotation angles above are interpreted. From the **Work plane** list, select **xy-plane** (the default, for a standard global Cartesian coordinate system) or select any work plane defined above this node in the geometry sequence. If you choose a work plane, the work plane and its coordinate system appear in the Graphics window, using an extra coordinate triad with the directions **xw**, **yw**, and **zw** (which are then used to specify the cone's position).

LAYERS

Layers can be used to create sandwich primitives by adding layers to one or more sides of the cone. You specify the thicknesses of layers in the **Layers** table, and optionally a name for each layer. The outermost layer comes first. Select the check boxes to specify where to apply the layers. Each layer must have a minimal thickness (depending on the size of the geometry).

SELECTIONS OF RESULTING ENTITIES

Select the **Resulting objects selection** check box to create predefined selections (for all levels — objects, domains, boundaries, edges, and points — that are applicable) in subsequent nodes in the geometry sequence. To also make all or one of the types of resulting entities (domains, boundaries, edges, and points) that the cone consists of available as selections in all applicable selection lists (in physics and materials settings, for example), choose an option from the **Show in physics** (**Show in instances** if in a geometry part) list: **All levels**, **Domain selection**, **Boundary selection**, **Edge selection**, or **Point selection**. The default is **Domain selection**, which is suitable for use with materials and physics defined in domains. For use with a boundary condition, for example, choose **Boundary selection**. These selections do not appear as separate selection nodes in the model tree. Select **Off** to not make any selection available outside of the geometry sequence. From the **Color** list, choose a color for highlighting the resulting objects selection. See Selection Colors.

Cumulative Selection

If you want to make the resulting entities contribute to a cumulative selection, select a cumulative selection from the **Contribute to** list (the default, **None**, gives no contribution), or click the **New** button to create a new cumulative selection (see Cumulative Selections).

Cubic Bézier

A cubic Bézier curve is a curve object in 2D or 3D having a single edge defined by a rational function of degree 3. The edge must not intersect itself. To create a cubic Bézier curve, you can:

- Right-click the 2D or 3D **Geometry** node and add a **Cubic Bézier** node ( ) (in 3D from the **More Primitives** submenu) to the sequence, then define it in the **Settings** window, or
- Select **Cubic Bézier** from the **More Primitives** menu on the **Geometry** toolbar **Primitives** group to add a **Cubic Bézier** node ( )the sequence, then define it in the **Settings** window, or
- On the 2D **Sketch** toolbar **Draw** group, select **Cubic**. Then draw the cubic curve segments of a Bézier curve in the Graphics window. Also see Drawing Geometric Primitives in the Graphics Window.

If desired, enter the properties of the cubic Bézier curve using the following sections:

CONTROL POINTS

Specify the coordinates for the four control points. The first and fourth control points are the endpoints of the Bézier curve. The second and third control points determine the tangent directions at the endpoints.

WEIGHTS

Specify the weights for each control point. The weights are used in the denominator of the rational function. The default is that all weights are 1, which means that the function is a polynomial.

COORDINATE SYSTEM

	This section is only available in 3D geometries.

The coordinate system in which the Bézier curve coordinates above are interpreted. From the **Work plane** list, select **xy-plane** (the default, for a standard global Cartesian coordinate system) or select any work plane defined above this node in the geometry sequence. If you choose a work plane, the work plane and its coordinate system appear in the Graphics window, using an extra coordinate triad with the directions **xw**, **yw**, and **zw** (which are then used to specify the curve's position).

SELECTIONS OF RESULTING ENTITIES

	This section is not available if the **Cubic Bézier** node is a subnode under a **Composite Curve** node.

Select the **Resulting objects selection** check box to create predefined selections (for all levels — objects, domains, boundaries, edges, and points — that are applicable) in subsequent nodes in the geometry sequence. To also make all or one of the types of resulting entities (domains, boundaries, edges, and points) that the cone consists of available as selections in all applicable selection lists (in physics and materials settings, for example), choose an option from the **Show in physics** (**Show in instances** if in a geometry part) list: **All levels**, **Domain selection**, **Boundary selection**, **Edge selection**, or **Point selection**. The default is **Domain selection**, which is suitable for use with materials and physics defined in domains. For use with a boundary condition, for example, choose **Boundary selection**. These selections do not appear as separate selection nodes in the model tree. Select **Off** to not make any selection available outside of the geometry sequence. From the **Color** list, choose a color for highlighting the resulting objects selection. See Selection Colors.

Cumulative Selection

If you want to make the resulting entities contribute to a cumulative selection, select a cumulative selection from the **Contribute to** list (the default, **None**, gives no contribution), or click the **New** button to create a new cumulative selection (see Cumulative Selections).

Cylinder

To create a solid or hollow (surface) cylinder, in the **Geometry** toolbar, click **Cylinder** ( ). The cylinder is a right circular cylinder — that is, a cylinder that has circles as bases aligned one directly above the other. You can also right-click the **Geometry** node to add this node from the context menu. Then enter the properties of the cylinder using the following sections:

OBJECT TYPE

From the **Type** list, select **Solid** or **Surface** to specify if the cylinder is a solid object or a (hollow) surface object.

SIZE AND SHAPE

Define the size and shape of the cylinder in the **Radius** and **Height** fields.

POSITION

Enter the position of the cylinder using the **x**, **y**, and **z** fields. This is the center of the bottom circle.

AXIS

Specify the direction of the cylinder's axis. From the **Axis type** list, choose **x-axis**, **y-axis**, or **z-axis** (the default) to obtain an axis aligned with the specified coordinate axis. Choose **Cartesian** to enter a direction vector using the **x**, **y**, and **z** fields. Choose **Spherical** to enter the direction using the angles **theta** (polar, zenith) and **phi** (azimuth).

ROTATION ANGLE

Specify the rotational angle about the axis in the **Rotation** field. When this angle is zero (the default), the second axis of the cylinder's local coordinate system is parallel to the *xy*-plane.

COORDINATE SYSTEM

The coordinate system in which the position, axis, and rotation angles above are interpreted. From the **Work plane** list, select **xy-plane** (the default, for a standard global Cartesian coordinate system) or select any work plane defined above this node in the geometry sequence. If you choose a work plane, the work plane and its coordinate system appear in the Graphics window, using an extra coordinate triad with the directions **xw**, **yw**, and **zw** (which are then used to specify the cylinder's position).

LAYERS

Layers can be used to create sandwich primitives by adding layers on one or more sides. You specify the thicknesses of layers in the **Layers** table, and optionally a name for each layer. The outermost layer comes first. Select the check boxes to specify where to apply the layers. Each layer must have a minimal thickness (depending on the size of the geometry).

SELECTIONS OF RESULTING ENTITIES

Select the **Resulting objects selection** check box to create predefined selections (for all levels — objects, domains, boundaries, edges, and points — that are applicable) in subsequent nodes in the geometry sequence. To also make all or one of the types of resulting entities (domains, boundaries, edges, and points) that the cylinder consists of available as selections in all applicable selection lists (in physics and materials settings, for example), choose an option from the **Show in physics** (**Show in instances** if in a geometry part) list: **All levels**, **Domain selection**, **Boundary selection**, **Edge selection**, or **Point selection**. The default is **Domain selection**, which is suitable for use with materials and physics defined in domains. For use with a boundary condition, for example, choose **Boundary selection**. These selections do not appear as separate selection nodes in the model tree. Select **Off** to not make any selection available outside of the geometry sequence. From the **Color** list, choose a color for highlighting the resulting objects selection. See Selection Colors.

Cumulative Selection

If you want to make the resulting entities contribute to a cumulative selection, select a cumulative selection from the **Contribute to** list (the default, **None**, gives no contribution), or click the **New** button to create a new cumulative selection (see Cumulative Selections).

Eccentric Cone

To create an eccentric (oblique) cone or cone frustum with an elliptic base, in the **Geometry** toolbar, from the **More Primitives** ( ) menu, select **Eccentric Cone** ( ). You can also right-click the **Geometry** node to add this node from the context menu. Then enter the properties of the eccentric cone using the following sections:

OBJECT TYPE

From the **Type** list, select **Solid** or **Surface** to specify if the eccentric cone is a solid object or a (hollow) surface object.

SIZE AND SHAPE

Define the size and shape of the eccentric cone in the **a-semiaxis**, **b-semiaxis**, **Height**, **Ratio**, **Top displacement 1**, and **Top displacement 2** fields. The bottom of the cone is an ellipse with semiaxes given in the **a-semiaxis** and **b-semiaxis**

fields. The **Height** field determines the height of the cone frustum. The **Ratio** field controls the ratio between the perimeters of the top and bottom ellipses. To get an oblique cone, use the **Top displacement** fields to specify the displacement of the top ellipse's center relative to the bottom ellipse's center, in the cone's local coordinate system.

POSITION

Enter the position of the eccentric cone using the **x**, **y**, and **z** fields. This is the center of the bottom ellipse.

AXIS

Specify the direction of the third axis of the cone's local coordinate system — that is, the normal to the base ellipse. From the **Axis type** list, choose **x-axis**, **y-axis**, or **z-axis** (the default) to obtain an axis aligned with the specified coordinate axis. Choose **Cartesian** to enter a direction vector using the **x**, **y**, and **z** fields. Choose **Spherical** to enter the direction using the angles **theta** (polar, zenith) and **phi** (azimuth).

ROTATION ANGLE

Specify the rotational angle about the axis in the **Rotation** field. When this angle is zero (the default), the second axis of the cone's local coordinate system is parallel to the *xy*-plane.

COORDINATE SYSTEM

The coordinate system in which the position, axis, and rotation angles above are interpreted. From the **Work plane** list, select **xy-plane** (the default, for a standard global Cartesian coordinate system) or select any work plane defined above this node in the geometry sequence. If you choose a work plane, the work plane and its coordinate system appear in the Graphics window, using an extra coordinate triad with the directions **xw**, **yw**, and **zw** (which are then used to specify the cone's position).

SELECTIONS OF RESULTING ENTITIES

Select the **Resulting objects selection** check box to create predefined selections (for all levels — objects, domains, boundaries, edges, and points — that are applicable) in subsequent nodes in the geometry sequence. To also make all or one of the types of resulting entities (domains, boundaries, edges, and points) that the eccentric cone consists of available as selections in all applicable selection lists (in physics and materials settings, for example), choose an option from the **Show in physics** (**Show in instances** if in a geometry part) list: **All levels**, **Domain selection**, **Boundary selection**, **Edge selection**, or **Point selection**. The default is **Domain selection**, which is suitable for use with materials and physics defined in domains. For use with a boundary condition, for example, choose **Boundary selection**. These selections do not appear as separate selection nodes in the model tree. Select **Off** to not make any selection available outside of the geometry sequence. From the **Color** list, choose a color for highlighting the resulting objects selection. See Selection Colors.

Cumulative Selection

If you want to make the resulting entities contribute to a cumulative selection, select a cumulative selection from the **Contribute to** list (the default, **None**, gives no contribution), or click the **New** button to create a new cumulative selection (see Cumulative Selections).

Ellipse

To create a ellipse, you can:

- Right-click the **Geometry** node and add an **Ellipse** node to the sequence then define it in the **Settings** window, or
- On the 2D **Geometry** toolbar **Draw** group, from the **Circle** ( ) menu, select **Ellipse** ( ) or **Ellipse (Corner)**( ).Then draw the ellipse in the Graphics window. Also see Drawing Geometric Primitives in the Graphics Window.

	To draw an ellipse for a 2D model, click Ellipse or Ellipse (Corner). Then, click the ellipse's center (or one corner of the ellipse's bounding box) in the Graphics window. Drag the mouse to the desired position of a corner of the ellipse's bounding box. When you release the mouse button, a solid ellipse appears, and an Ellipse node appears in the geometry sequence.

When you have added a node or finished drawing the ellipse in the Graphics window, you can use the following section to define it or fine tune it:

OBJECT TYPE

From the **Type** list, select **Solid** or **Curve** to specify if the ellipse is a solid object or a curve object.

	When using the geometry toolbar, the **Solid** button ( ) is available to toggle between drawing a solid object or an outline (or curve) instead of selecting an **Object Type**. See Geometry Drawing Toolbar Buttons for other drawing toolbar buttons.

SIZE AND SHAPE

Define the ellipse's semiaxes in the **a-semiaxis** and **b-semiaxis** fields. Enter a sector angle (in degree) for an ellipse sector in the **Sector angle** field. The default value is 360 degrees for a full ellipse.

POSITION

Enter the position of the ellipse using the **x** and **y** fields (**r** and **z** in 2D axial symmetry, **xw** and **yw** in work planes). From the **Base** list, choose **Center** if the ellipse is centered about the position, or choose **Corner** if a surrounding box has one corner at the position.

ROTATION ANGLE

Specify the counterclockwise rotational angle about the base point in the **Rotation** field. The default angle is 0 degrees.

LAYERS

Layers can be used to create sandwich primitives by adding several concentric ellipses. You specify the thicknesses of layers in the **Layers** table, and optionally a name for each layer. The outermost layer comes first. Each layer must have a minimal thickness (depending on the size of the geometry).

SELECTIONS OF RESULTING ENTITIES

Select the **Resulting objects selection** check box to create predefined selections (for all levels — objects, domains, boundaries, and points — that are applicable) in subsequent nodes in the geometry sequence. To also make all or one of the types of resulting entities (domains, boundaries, edges, and points) that the ellipse consists of available as selections in all applicable selection lists (in physics and materials settings, for example), choose an option from the **Show in physics** (**Show in instances** if in a geometry part; **Show in 3D** in a plane geometry under a work plane in a 3D component) list: **All levels**, **Domain selection**, **Boundary selection**, or **Point selection**. The default is **Domain**

selection, which is suitable for use with materials and physics defined in domains. For use with a boundary condition, for example, choose **Boundary selection**. These selections do not appear as separate selection nodes in the model tree. Select **Off** to not make any selection available outside of the geometry sequence. From the **Color** list, choose a color for highlighting the resulting objects selection. See Selection Colors.

Cumulative Selection

If you want to make the resulting entities contribute to a cumulative selection, select a cumulative selection from the **Contribute to** list (the default, **None**, gives no contribution), or click the **New** button to create a new cumulative selection (see Cumulative Selections).

Ellipsoid

To create an ellipsoid, in the **Geometry** toolbar, from the **More Primitives** ( ) menu, select **Ellipsoid** ( ). You can also right-click the **Geometry** node to add this node from the context menu. Then enter the properties of the ellipsoid using the following sections:

OBJECT TYPE

From the **Type** list, select **Solid** or **Surface** to specify if the ellipsoid is a solid object or a (hollow) surface object.

SIZE AND SHAPE

Define the semiaxes of the ellipsoid in the **a-semiaxis**, **b-semiaxis**, and **c-semiaxis** fields.

POSITION

Enter the position of the ellipsoid's center using the **x**, **y**, and **z** fields.

AXIS

Specify the direction of the ellipsoid's third axis — that is, the principal axis corresponding to **c-semiaxis**. From the **Axis type** list, choose **x-axis**, **y-axis**, or **z-axis** (the default) to obtain an axis aligned with the specified coordinate axis. Choose **Cartesian** to enter a direction vector in the **x**, **y**, and **z** fields. Choose **Spherical** to enter the direction using the angles **theta** (polar, zenith) and **phi** (azimuth).

ROTATION ANGLE

Specify the rotational angle about the ellipsoid's third axis in the **Rotation** field. When this angle is zero (the default), the ellipsoid's second axis is parallel to the *xy*-plane.

COORDINATE SYSTEM

The coordinate system in which the position, axis, and rotation angles above are interpreted. From the **Work plane** list, select **xy-plane** (the default, for a standard global Cartesian coordinate system) or select any work plane defined above this node in the geometry sequence. If you choose a work plane, the work plane and its coordinate system appear in the Graphics window, using an extra coordinate triad with the directions **xw**, **yw**, and **zw** (which are then used to specify the ellipsoid's position).

LAYERS

Layers can be used to create sandwich primitives by adding several concentric ellipsoids. You specify the thicknesses of layers in the **Layers** table, and optionally a name for each layer. The outermost layer comes first. Each layer must have a minimal thickness (depending on the size of the geometry).

SELECTIONS OF RESULTING ENTITIES

Select the **Resulting objects selection** check box to create predefined selections (for all levels — objects, domains, boundaries, edges, and points — that are applicable) in subsequent nodes in the geometry sequence. To also make all or one of the types of resulting entities (domains, boundaries, edges, and points) that the ellipsoid consists of

available as selections in all applicable selection lists (in physics and materials settings, for example), choose an option from the **Show in physics** (**Show in instances** if in a geometry part) list: **All levels**, **Domain selection**, **Boundary selection**, **Edge selection**, or **Point selection**. The default is **Domain selection**, which is suitable for use with materials and physics defined in domains. For use with a boundary condition, for example, choose **Boundary selection**. These selections do not appear as separate selection nodes in the model tree. Select **Off** to not make any selection available outside of the geometry sequence. From the **Color** list, choose a color for highlighting the resulting objects selection. See Selection Colors.

Cumulative Selection

If you want to make the resulting entities contribute to a cumulative selection, select a cumulative selection from the **Contribute to** list (the default, **None**, gives no contribution), or click the **New** button to create a new cumulative selection (see Cumulative Selections).

Helix

To create a helix (coil) with a circular cross section, in the **Geometry** toolbar click **Helix** ( ). You can also right-click the **Geometry** node to add this node from the context menu. Then enter the properties of the helix using the sections in the **Settings** window.

	To create a helix with a noncircular cross section, define the cross section using a work plane. Define the helix centerpoint as a 3D curve using a **Helix** node with a minor radius = 0 or a **Parametric Curve** node, and then use a **Sweep** node to sweep the cross section from the work plane along the curve to create the helix.

OBJECT TYPE

From the **Type** list, select **Solid** (the default) to create a solid helix, or select **Surface** to create a hollow helix that consists of surfaces only.

SIZE AND SHAPE

This section contains a number of properties that determine the size and shape of the helix.

The **Number of turns** field contains a positive number. The default value is 3 turns.

There are two radii:

- The **Major radius** (SI unit: m) field is the radius from the center of the helix (the default is 1 m).
- The **Minor radius** field (SI unit: m) is the radius of the cross section (the default is 0.1 m). The **Minor radius** can be zero, in which case a curve object is created. You can use this together with the **Sweep** feature to create helices with noncircular cross sections.

There are two pitches:

- The **Axial pitch** field (SI unit: m) determines the axial distance between similar positions on two consecutive turns of the helix (the default is 0.3 m).
- The **Radial pitch** field (SI unit: m) determines the radial distance between similar positions on two consecutive turns of the helix (the default is 0, which means that each turn has the same radius).

Select **Right handed** or **Left handed** from the **Chirality** list. The *chirality* or handedness of the helix can be either right handed (the default) or left handed. For a right handed helix, a clockwise screwing motion moves the helix away from the observer; for a left handed helix, a clockwise screwing motion moves it toward the observer.

From the **End caps** list, select an option to create the end caps of the helix:

- Select **Parallel to axis** (the default) to create end caps that are parallel to the helix axis.

- Select **Perpendicular to axis** to create end caps that are perpendicular to the helix axis.
- Select **Parallel to spine** to create end caps that are parallel to the spine of the helix.

The **Parallel to axis** and **Perpendicular to axis** options modify the helix in the vicinity of the end caps. They only give a valid geometry if the axial pitch is relatively small or large, respectively.

POSITION

This is the center position for the starting turn of the helix. Enter the coordinates in the **x**, **y**, and **z** fields. The default position is the origin.

AXIS

Select the **Axis type**: **x-axis**, **y-axis**, **z-axis**, **Cartesian**, or **Spherical**.

- Select **x-axis**, **y-axis**, or **z-axis** (the default) to define the axis direction parallel to one of the coordinate axes.
- Select **Cartesian** to define the axis direction using Cartesian coordinates in the **x**, **y**, and **z** fields. The default axis is in the z direction (0, 0, 1).
- Select **Spherical** to define the axis direction using spherical coordinates θ and φ (angles of inclination and azimuth, respectively) in the **theta** and **phi** fields. The default angles are 0.

ROTATION ANGLE

Rotate the helix around its axis by entering an angle in the **Rotation** field. The default value is 0 degrees.

COORDINATE SYSTEM

The coordinate system in which the position, axis, and rotation angles above are interpreted. From the **Work plane** list, select **xy-plane** (the default, for a standard global Cartesian coordinate system) or select any work plane defined above this node in the geometry sequence. If you choose a work plane, the work plane and its coordinate system appear in the Graphics window, using an extra coordinate triad with the directions **xw**, **yw**, and **zw** (which are then used to specify the position of the helix).

ADVANCED SETTINGS

By default, the **Twist compensation** check box is selected, which prevents the twisting that would otherwise occur due to nonzero torsion for curves that do not belong to a fixed plane. Twist compensation rotates the base circle during the sweep along the helix curve by an amount equal to the integral of the curve torsion.

Twist compensation affects the position of the vertices on the top side of the helix. Clear the **Twist compensation** check box to turn it off. See Figure 7-3 below.

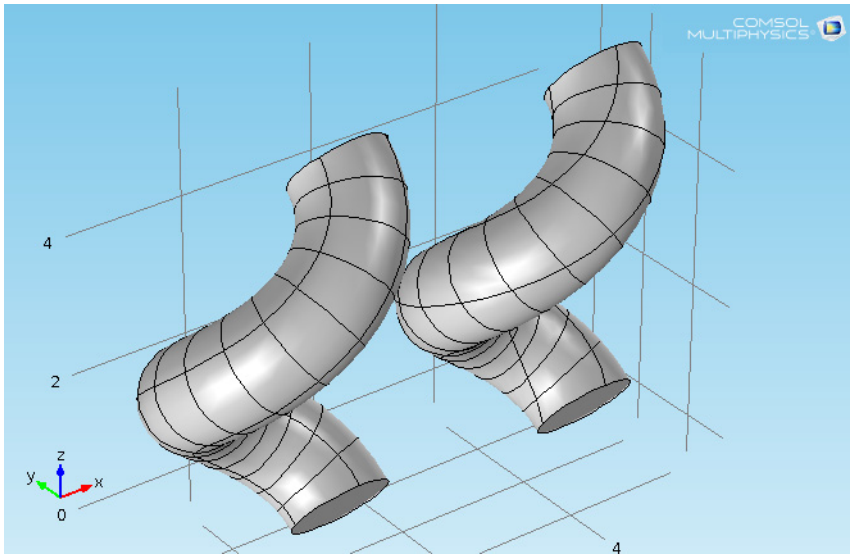

Figure 7-3: The helix on the left has twist compensation (the default). For the helix on the right, twist compensation has been turned off.

From the **Geometry representation** list, select **Spline** (the default) to represent the helix using splines, or **Bézier**, to represent the helix using Bézier curves. The difference is that using Bézier curves, the intersections between the surfaces that form the helix are visible edges, whereas they are hidden when using splines.

The value in the **Relative tolerance** field is a relative tolerance that controls the accuracy of the geometric representation of the helix. The geometric representation is an approximation, which is necessary because it is not possible to exactly represent a helix using NURBS (nonuniform rational basis splines). The default value is 10^{-4} (or 0.01%).

SELECTIONS OF RESULTING ENTITIES

Select the **Resulting objects selection** check box to create predefined selections (for all levels — objects, domains, boundaries, edges, and points — that are applicable) in subsequent nodes in the geometry sequence. To also make all or one of the types of resulting entities (domains, boundaries, edges, and points) that the helix consists of available as selections in all applicable selection lists (in physics and materials settings, for example), choose an option from the **Show in physics** (**Show in instances** if in a geometry part) list: **All levels**, **Domain selection**, **Boundary selection**, **Edge selection**, or **Point selection**. The default is **Domain selection**, which is suitable for use with materials and physics defined in domains. For use with a boundary condition, for example, choose **Boundary selection**. These selections do not appear as separate selection nodes in the model tree. Select **Off** to not make any selection available outside of the geometry sequence. From the **Color** list, choose a color for highlighting the resulting objects selection. See Selection Colors.

Cumulative Selection

If you want to make the resulting entities contribute to a cumulative selection, select a cumulative selection from the **Contribute to** list (the default, **None**, gives no contribution), or click the **New** button to create a new cumulative selection (see Cumulative Selections).

Hexahedron

To create a hexahedron bounded by bilinear faces, in the **Geometry** toolbar, click **More Primitives>Hexahedron** ( ). You can also right-click the **Geometry** node to add this node from the context menu. Then enter the properties of the hexahedron using the following sections:

OBJECT TYPE

From the **Type** list, select **Solid** or **Surface** to specify if the hexahedron is a solid object or a (hollow) surface object.

VERTICES

Define the position, size, and shape of the hexahedron by specifying the coordinates of its vertices. Vertices 1–4 are the vertices of the bottom face in clockwise order. Vertices 5–8 are the vertices of the top face in clockwise order.

COORDINATE SYSTEM

The coordinate system in which the coordinates of the vertices above are interpreted. From the **Work plane** list, select **xy-plane** (the default, for a standard global Cartesian coordinate system) or select any work plane defined above this node in the geometry sequence. If you choose a work plane, the work plane and its coordinate system appear in the Graphics window, using an extra coordinate triad with the directions **xw**, **yw**, and **zw** (which are then used to specify the hexahedron's position).

SELECTIONS OF RESULTING ENTITIES

Select the **Resulting objects selection** check box to create predefined selections (for all levels — objects, domains, boundaries, edges, and points — that are applicable) in subsequent nodes in the geometry sequence. To also make all or one of the types of resulting entities (domains, boundaries, edges, and points) that the hexahedron consists of available as selections in all applicable selection lists (in physics and materials settings, for example), choose an option from the **Show in physics** (**Show in instances** if in a geometry part) list: **All levels**, **Domain selection**, **Boundary selection**, **Edge selection**, or **Point selection**. The default is **Domain selection**, which is suitable for use with materials and physics defined in domains. For use with a boundary condition, for example, choose **Boundary selection**. These selections do not appear as separate selection nodes in the model tree. Select **Off** to not make any selection available outside of the geometry sequence. From the **Color** list, choose a color for highlighting the resulting objects selection. See Selection Colors.

Cumulative Selection

If you want to make the resulting entities contribute to a cumulative selection, select a cumulative selection from the **Contribute to** list (the default, **None**, gives no contribution), or click the **New** button to create a new cumulative selection (see Cumulative Selections).

Interpolation Curve

An interpolation curve consists of a curve that interpolates or approximates a sequence of points. To create an interpolation curve, in the **Geometry** toolbar, from the **More Primitives** (3D or 2D) menu, select **Interpolation Curve** ( ). You can also right-click the **Geometry** node to add this node from the context menu. It is also possible to create an interpolation curve interactively by choose **Interpolation Points** ( ) or **Start, Tangent, Other** ( ) from the **Interpolation Curve** menu on the **Sketch** toolbar.

Enter the properties of the interpolation curve using the following sections:

OBJECT TYPE

From the **Type** list, select **Solid**, **Closed curve**, or **Open curve** to specify if the interpolation curve is a solid object (only available in 2D) or a closed or open curve object. If **Solid** or **Closed curve** is selected, a point is automatically added if needed to close the curve, and the curve has continuous first and second derivatives everywhere.

INTERPOLATION POINTS

From the **Data source** list, select **Table** to specify the points to interpolate in a table in the **Settings** window. This is the default data source. You can move rows up and down in the table, remove a row from the table, and clear the table using the buttons underneath the table. You can also load table data from file and save the table data to a file.

From the **Data source** list, select **Vectors** to specify the points to interpolate as vectors (lists) in the fields **x**, **y**, and (3D only) **z**; **r** and **z** in 2D axial symmetry; **xw** and **yw** in work planes. Each field can contain a list of numbers or expressions containing parameters, separated with commas or spaces. Click the **Range** button ( ) to use the **Range** dialog box for specifying the vector of values for each coordinate.

From the **Data source** list, select **File** to read the points to interpolate from a text file. Specify the filename in the **Filename** field or click the **Browse** button. If **Data format** is **Spreadsheet**, the file must be a text file with the number of columns equal to the dimension of the geometry sequence, and one row for each data point. The columns can be separated by a space, tab, comma, or semicolon character. If **Data format** is **Sectionwise**, the file must be in the sectionwise COMSOL Multiphysics postprocessing data format (see About the Sectionwise Data Format for Data Export). The entries in the file should be numerical. In general, nonnumerical tokens and header lines are ignored. Click the **Import to Table** button to copy the file contents into the data point table and change the **Data source** to **Table**.

If **Data source** is **File**, changes in the file do not automatically cause the interpolation curve feature to be rebuilt. To rebuild the feature after a change in the file, click the **Rebuild with Current File** button.

In the **Relative tolerance** field, enter the maximum allowed distance between the generated curve and the sequence of points. The default value 0 implies that the curve interpolates all points. If the relative tolerance is larger than 0, the curve does not necessarily interpolate all points, but the first and last points are interpolated.

Curves with self intersections might look correct when displayed but are not handled correctly by other geometry and meshing operations. This also applies if two different parts of the curve touch, even if they do not intersect.

END CONDITIONS

This section is visible only when the object type is **Open curve** and the **Relative tolerance** is 0. Also, this section is not visible if **Data source** is **File** ad **Data format** is **Sectionwise**.

From the **Condition at starting point** list, choose **None** (the default) to have no extra condition, choose **Tangent direction** to specify a tangent in the **x**, **y**, and **z** (3D) fields, or choose **Zero curvature**.

From the **Condition at endpoint** list, choose **None** (the default) to have no extra condition, choose **Tangent direction** to specify a tangent in the **x**, **y**, and **z** (3D) fields, or choose **Zero curvature**.

For the end conditions, the zero curvature is also called *natural spline*. The tangent direction is also called a *clamped spline*. Only the direction of the tangent vector matters; the magnitude is not used.

COORDINATE SYSTEM

This section is available in 3D geometries only.

The coordinate system in which the curve coordinates above are interpreted. From the **Work plane** list, select **xy-plane** (the default, for a standard global Cartesian coordinate system) or select any work plane defined above this node in the geometry sequence. If you choose a work plane, the work plane and its coordinate system appear in the Graphics window, using an extra coordinate triad with the directions **xw**, **yw**, and **zw** (which are then used to specify the curve's position).

SELECTIONS OF RESULTING ENTITIES

Select the **Resulting objects selection** check box to create predefined selections (for all levels — objects, domains, boundaries, edges, and points — that are applicable) in subsequent nodes in the geometry sequence. To also make all or one of the types of resulting entities (domains, boundaries, edges, and points) that the interpolation curve consists of available as selections in all applicable selection lists (in physics and materials settings, for example), choose an option from the **Show in physics** (**Show in instances** if in a geometry part; **Show in 3D** in a plane geometry under a work plane in a 3D component) list: **All levels**, **Domain selection**, **Boundary selection**, **Edge selection** (3D only), or **Point selection**. The default is **Domain selection**, which is suitable for use with materials and physics defined in domains. For use with a boundary condition, for example, choose **Boundary selection**. These selections do not appear as separate selection nodes in the model tree. Select **Off** to not make any selection available outside of the geometry sequence. From the **Color** list, choose a color for highlighting the resulting objects selection. See Selection Colors.

Cumulative Selection

If you want to make the resulting entities contribute to a cumulative selection, select a cumulative selection from the **Contribute to** list (the default, **None**, gives no contribution), or click the **New** button to create a new cumulative selection (see Cumulative Selections).

Interval

To create one or several intervals for a 1D geometry:

- Right-click the **Geometry** node and add an **Interval** node to the sequence then define it in the **Settings** window, or
- On the 1D **Geometry** toolbar **Primitives** group, click **Interval** ( ). Or from the **Draw** group, click **Interval** and create an interval by clicking in the **Graphics** window. Also see Drawing Geometric Primitives in the Graphics Window.

When you have added a node or finished drawing intervals in the **Graphics** window, use the following section to define or fine tune them.

INTERVAL

From the **Specify** list, choose **Coordinates** (the default) to specify intervals using coordinates for the points that define the beginning and end of each interval, or choose **Interval lengths** to specify a left endpoint (starting point) and one or more interval lengths.

For **Coordinates**, choose a source from the **Coordinate source** list: The default is **Table**, for adding coordinates in a table of values below (the default is a single interval from 0 to 1). Alternatively, choose **Vector** to enter a vector of comma-separated or space-separated coordinates for the intervals' starting points and endpoints. Click the **Range** button ( ) to use the **Range** dialog box for specifying the vector of values for each coordinate.

For **Interval lengths**, first enter the coordinate of the starting point for the intervals in the **Left endpoint** field. Then choose a source from the **Length source** list: The default is **Table**, for adding interval lengths in a table of values below (the default is a single interval of length 1). Alternatively, choose **Vector** to enter a vector of comma-separated or space-separated lengths of the intervals. Click the **Range** button ( ) to use the **Range** dialog box for specifying the vector of values for each length.

SELECTIONS OF RESULTING ENTITIES

Select the **Resulting objects selection** check box to create predefined selections (for all levels — objects, domains, and boundaries — that are applicable) in subsequent nodes in the geometry sequence. To also make all or one of the types of resulting entities (domains and boundaries) that the interval consists of available as selections in all applicable selection lists (in physics and materials settings, for example), choose an option from the **Show in physics** (**Show in instances** if in a geometry part) list: **All levels**, **Domain selection**, or **Boundary selection**. The default is **Domain**

selection, which is suitable for use with materials and physics defined in domains. For use with a boundary condition, for example, choose **Boundary selection**. These selections do not appear as separate selection nodes in the model tree. Select **Off** to not make any selection available outside of the geometry sequence. From the **Color** list, choose a color for highlighting the resulting objects selection. See Selection Colors.

Cumulative Selection

If you want to make the resulting entities contribute to a cumulative selection, select a cumulative selection from the **Contribute to** list (the default, **None**, gives no contribution), or click the **New** button to create a new cumulative selection (see Cumulative Selections).

Line Segment

A line segment is a line between a starting point or vertex and endpoint or vertex in 2D and 3D. In 2D, add a **Line Segmen**t node ( ) by right-clicking the **Geometry** node and select it from the context menu in 2D or from the **More Primitives** submenu in 3D., In the **Geometry** ribbon, you can choose **Line Segment** from the **Primitives** menu in 2D and the **More Primitives** menu in 3D.

STARTING POINT

Define the starting point for the line segment. From the **Specify** list, choose **Vertex** (the default) to specify a start vertex by selecting a vertex from the geometry or using an applicable selection in the **Start vertex** list. Click the **Active** button to toggle between turning ON and OFF the start vertex selection. Alternatively, select **Coordinates** to specify the **x**, **y**, and (3D only) **z** coordinates for the starting point.

ENDPOINT

Define the endpoint for the line segment. From the **Specify** list, choose **Vertex** (the default) to specify an end vertex by selecting a vertex from the geometry or using an applicable selection in the **End vertex** list. Click the **Active** button to toggle between turning ON and OFF the end vertex selection. Alternatively, select **Coordinates** to specify the **x**, **y**, and (3D only) **z** coordinates for the endpoint.

COORDINATE SYSTEM

The coordinate system in which the coordinates above are interpreted (in 3D only, and if at least one of the **Specify** lists is set to **Coordinates**). From the **Work plane** list, select **xy-plane** (the default, for a standard global Cartesian coordinate system) or select any work plane defined above this node in the geometry sequence. If you choose a work plane, the work plane and its coordinate system appear in the Graphics window, using an extra coordinate triad with the directions **xw**, **yw**, and **zw** (which are then used to specify the line's position).

SELECTIONS OF RESULTING ENTITIES

Select the **Resulting objects selection** check box to create predefined selections (for all levels — objects, domains, and boundaries — that are applicable) in subsequent nodes in the geometry sequence. To also make all or one of the types of resulting entities (domains and boundaries) that the interval consists of available as selections in all applicable selection lists (in physics and materials settings, for example), choose an option from the **Show in physics** (**Show in instances** if in a geometry part) list: **All levels**, **Boundary selection** (2D or **Edge selection** (3D), or **Point selection**. The default is **Boundary selection** (2D) or **Edge selection** (3D). These selections do not appear as separate selection nodes in the model tree. Select **Off** to not make any selection available outside of the geometry sequence. From the **Color** list, choose a color for highlighting the resulting objects selection. See Selection Colors.

Cumulative Selection

If you want to make the resulting entities contribute to a cumulative selection, select a cumulative selection from the **Contribute to** list (the default, **None**, gives no contribution), or click the **New** button to create a new cumulative selection (see Cumulative Selections).

Parametric Curve

A parametric curve is a curve in 2D and 3D where you use a parameter to define the coordinates of the curve. For example, the coordinates (s·cos(s), s·sin(s)) for a parameter s that runs from 0 to 10π defines a spiral in 2D. To create a parametric curve, in the **Geometry** toolbar, from the **More Primitives** (3D or 2D) menu, select **Parametric Curve** ( ). You can also right-click the **Geometry** node to add this node from the context menu. Then enter the properties of the parametric curve using the following sections:

PARAMETER

Define the parameter name in the **Name** field (default name: `s`). Also define the interval for the parameter values in the **Minimum** (default: 0) and **Maximum** (default: 1) fields.

EXPRESSIONS

Enter the expressions that define the functions of the parameter for each spatial coordinate in the **x**, **y** (**r** and **z** in 2D axial symmetry, **xw** and **yw** in work planes), and (3D only) **z** fields. To create the spiral described earlier with the parameter s, type `s*cos(s)` in the **x** field and `s*sin(s)` in the **y** field.

> Self-intersecting curves are not supported, except for closed curves (that is, when the starting point and endpoint coincide).

By default, the **x**, **y** (**r** and **z** in 2D axial symmetry, **xw** and **yw** in work planes), and (in 3D) **z** expressions define the coordinates of points on the curve in the standard coordinate system. It is, however, possible to change this using the settings in the **Position**, **Axis** (3D only), and **Rotation Angle** sections. This is useful if you have created a parametric curve with the right shape but want to move it to another position or orientation. These settings can be thought of as defining a local coordinate system in which the parametric curve is defined.

Curves with self intersections might look correct when displayed but are not handled correctly by other geometry and meshing operations. This also applies if two different parts of the curve touch, even if they do not intersect. Simple closed curves are allowed, though.

POSITION

Enter the position of the local coordinate system origin using the **x**, **y** (**r** and **z** in 2D axial symmetry, **xw** and **yw** in work planes), and (3D only) **z** fields.

AXIS

In 3D, enter the axis that you want to rotate the local coordinate system about. The axis can be chosen parallel to one of the coordinate axes or entered in Cartesian or spherical coordinates. The z-axis of the local coordinate system is parallel to this axis.

ROTATION ANGLE

Enter the angle you want the local coordinate system to be rotated (default: 0 degrees). In 2D the local coordinate system is rotated about its origin. In 3D, the local coordinate system is rotated about its z-axis, which is parallel to the axis defined in the previous section.

COORDINATE SYSTEM

The coordinate system in which the position, axis, and rotation angles above are interpreted. From the **Work plane** list, select **xy-plane** (the default, for a standard global Cartesian coordinate system) or select any work plane defined above this node in the geometry sequence. If you choose a work plane, the work plane and its coordinate system appear in the Graphics window, using an extra coordinate triad with the directions **xw**, **yw**, and **zw** (which are then used to specify the curve's position).

ADVANCED SETTINGS

Internally, the software represents the parametric curve by a B-spline, which is computed to approximate the mathematical curve defined by the **x**, **y** in 2D, **r** and **z** in 2D axial symmetry, **xw** and **yw** in work planes, and **x**, **y**, and **z** in 3D expressions. The number of knot points in the spline increases automatically until the curve approximation satisfies the tolerance specified in the **Relative tolerance** field or until it reaches the number of knots specified in the **Maximum number of knots** field. The tolerance is measured relative to the space diagonal of the bounding box of the parametric curve.

If the parameterization of the curve is uneven or includes singularities, select the **Reparameterize using arc length** check box to reparameterize the curve, possibly providing a better parameterization without singularities.

SELECTIONS OF RESULTING ENTITIES

Select the **Resulting objects selection** check box to create predefined selections (for all levels — objects, domains, boundaries, edges, and points — that are applicable) in subsequent nodes in the geometry sequence. To also make all or one of the types of resulting entities (domains, boundaries, edges, and points) that the parametric curve consists of available as selections in all applicable selection lists (in physics and materials settings, for example), choose an option from the **Show in physics** (**Show in instances** if in a geometry part; **Show in 3D** in a plane geometry under a work plane in a 3D component) list: **All levels**, **Boundary selection** (2D only), **Edge selection** (3D only), or **Point selection**. The default is **Edge selection** in 3D and **Boundary selection** in 2D. These selections do not appear as separate selection nodes in the model tree. Select **Off** to not make any selection available outside of the geometry sequence. From the **Color** list, choose a color for highlighting the resulting objects selection. See Selection Colors.

Cumulative Selection

If you want to make the resulting entities contribute to a cumulative selection, select a cumulative selection from the **Contribute to** list (the default, **None**, gives no contribution), or click the **New** button to create a new cumulative selection (see Cumulative Selections).

Parametric Surface

A parametric surface is a surface in 3D where you use two parameters to define the coordinates of the surface. For example, the coordinates $(s_1 \cdot \cos(s_2), s_1 \cdot \sin(s_2), s_2)$ for a parameter s_1 that runs from 0 to π, and a parameter s_2 that runs from -1 to 1 define a "twisted rectangle". To create a parametric surface, in the **Geometry** toolbar, from the **More Primitives** ( ) menu, select **Parametric Surface** ( ). You can also right-click the **Geometry** node to add this node from the context menu. Then enter the properties of the parametric surface using the following sections:

PARAMETERS

Define the parameter names in the **Name** fields (default names: `s1` and `s2`). Also define the intervals for the parameter values in the **Minimum** (default: 0) and **Maximum** (default: 1) fields.

EXPRESSIONS

Enter the expressions that define the functions of the parameter for each spatial coordinate in the **x**, **y**, and **z** fields. To create the twisted rectangle described earlier with the parameters s_1 and s_2, type `s1*cos(s2)` in the **x** field, `s1*sin(s2)` in the **y** field, and `s2` in the **z** field.

By default, the **x**, **y**, and **z** expressions define the coordinates of points on the surface in the standard coordinate system. It is, however, possible to change this using the settings in the **Position**, **Axis**, and **Rotation Angle** sections. This is useful if you have created a parametric surface with the right shape but want to move it to another position or orientation. These settings can be thought of as defining a local coordinate system in which the parametric surface is defined.

Surfaces with self intersections might look correct when displayed but are not handled correctly by other geometry and meshing operations. This also applies to surfaces where one edge touches the surface of another edge, and to

surfaces with singular points. If necessary, several parametric surfaces can be combined to overcome this limitation. For example, constructing a cylindrical shell by typing `cos(s1)` in the **x** field, `sin(s1)` in the **y** field, and `s2` in the **z** field, where `s1` runs from 0 to 2π, and `s2` runs from 0 to 1, is incorrect because two edges of the parametric surface touch each other. Instead, use two parametric surfaces, with the same coordinate expressions, and where `s1` runs from 0 to π in the first surface and from π to 2π in the second one.

POSITION

Enter the position of the local coordinate system origin using the **x**, **y**, and **z** fields.

AXIS

Enter the axis that you want to rotate the local coordinate system about. The axis can be chosen parallel to one of the coordinate axes or entered in Cartesian or spherical coordinates. The *z*-axis of the local coordinate system is parallel to this axis.

ROTATION ANGLE

Enter the angle you want the local coordinate system to be rotated. The local coordinate system is rotated about its *z*-axis, which is parallel to the axis defined in the previous section.

COORDINATE SYSTEM

The coordinate system in which the position, axis, and rotation angles above are interpreted. From the **Work plane** list, select **xy-plane** (the default, for a standard global Cartesian coordinate system) or select any work plane defined above this node in the geometry sequence. If you choose a work plane, the work plane and its coordinate system appear in the Graphics window, using an extra coordinate triad with the directions **xw**, **yw**, and **zw** (which are then used to specify the position).

ADVANCED SETTINGS

Internally, the software represents the parametric surface by a B-spline, which is computed to approximate the mathematical surface defined by the **x**, **y**, and **z** expressions. The number of knot points in the spline increases automatically until the surface approximation satisfies the tolerance specified in the **Relative tolerance** field or until it reaches the number of knots specified in the **Maximum number of knots** field. The tolerance is measured relative to the space diagonal of the bounding box of the parametric surface.

SELECTIONS OF RESULTING ENTITIES

Select the **Resulting objects selection** check box to create predefined selections (for all levels — objects, domains, boundaries, edges, and points — that are applicable) in subsequent nodes in the geometry sequence. To also make all or one of the types of resulting entities (domains, boundaries, edges, and points) that the parametric surface consists of available as selections in all applicable selection lists (in physics and materials settings, for example), choose an option from the **Show in physics** (**Show in instances** if in a geometry part) list: **All levels**, **Boundary selection**, **Edge selection**, or **Point selection**. The default is **Boundary selection**. These selections do not appear as separate selection nodes in the model tree. Select **Off** to not make any selection available outside of the geometry sequence. From the **Color** list, choose a color for highlighting the resulting objects selection. See Selection Colors.

Cumulative Selection

If you want to make the resulting entities contribute to a cumulative selection, select a cumulative selection from the **Contribute to** list (the default, **None**, gives no contribution), or click the **New** button to create a new cumulative selection (see Cumulative Selections).

Point

To create points, you can:

- For all space dimensions, right-click the **Geometry** node and add a **Point** node to the sequence and then define it in the **Settings** window, or
- On the 1D **Geometry** toolbar **Primitives** group, click **Point** (·). Or from the **Draw** group, click **Point** and create a point by clicking in the **Graphics** window. Also see Drawing Geometric Primitives in the Graphics Window.
- On the 2D **Geometry** toolbar, from the **Primitives** ( ) menu, select **Point**. Or from the **Draw** group, click **Point** and create a point by clicking in the **Graphics** window. Also see Drawing Geometric Primitives in the Graphics Window.
- On the 3D **Geometry** toolbar, from the **More Primitives** ( ) menu, you can also select **Point** (·), which then adds a **Point** node to the sequence. You can then define the point's location in the **Settings** window for **Point**.

When you have added a node or finished drawing the point in the Graphics window, you can use the following section to define it or fine tune it.

POINT

Define the position of the point by entering its coordinates in fields labeled **x**, **y** (2D and 3D), and **z** (3D); **r** and **z** in 2D axial symmetry; **xw** and **yw** in work planes. To get several points, enter a list of coordinates in each of these fields. Separate the coordinates with commas or blanks.

COORDINATE SYSTEM

The coordinate system in which the point coordinates above are interpreted (for points in 3D geometries only). From the **Work plane** list, select **xy-plane** (the default, for a standard global Cartesian coordinate system) or select any work plane defined above this node in the geometry sequence. If you choose a work plane, the work plane and its coordinate system appear in the Graphics window, using an extra coordinate triad with the directions **xw**, **yw**, and **zw** (which are then used to specify the point's position).

SELECTIONS OF RESULTING ENTITIES

Select the **Resulting objects selection** check box to create predefined selections (for all levels — objects, domains, boundaries, edges, and points — that are applicable) in subsequent nodes in the geometry sequence. To also make all or one of the types of resulting entities (points) that the point consists of available as selections in all applicable selection lists (in physics and materials settings, for example), choose an option from the **Show in physics** (**Show in instances** if in a geometry part; **Show in 3D** in a plane geometry under a work plane in a 3D component) list: **All levels**, or **Point selection**. The default is **Point selection**. These selections do not appear as separate selection nodes in the model tree. Select **Off** to not make any selection available outside of the geometry sequence. From the **Color** list, choose a color for highlighting the resulting objects selection. See Selection Colors.

Cumulative Selection

If you want to make the resulting entities contribute to a cumulative selection, select a cumulative selection from the **Contribute to** list (the default, **None**, gives no contribution), or click the **New** button to create a new cumulative selection (see Cumulative Selections).

Polygon

A polygon consists of a sequence of connected line segments. To create a polygon, right-click a 2D **Geometry** node and select **Polygon** ( ). For a 3D model, in the **Geometry** toolbar, from the **More Primitives** ( ) menu, select **Polygon**. You can also right-click the **Geometry** node to add this node from the context menu. It is also possible to create a polygon interactively by clicking the **Draw Polygon** button on the **Sketch** toolbar.

Enter the properties of the polygon using the following sections:

OBJECT TYPE

From the **Type** list, select **Solid**, **Closed curve**, or **Open curve** to specify if the polygon is a solid object (only available in 2D) or a closed or open curve object. If you choose **Solid** or **Closed curve**, the program adds a line segment if needed to close the polygon.

	When using The Geometry Toolbar, the **Solid** button ( ) is available to toggle between drawing a solid object or an outline (or curve) instead of selecting an **Object Type**. See Geometry Drawing Toolbar Buttons for other drawing toolbar buttons.

COORDINATES

From the **Data source list**, you can choose from three different data sources for the coordinates:

- Select **Table** (the default) to specify the coordinates of the vertices in a table directly in the **Settings** window or load them from a file. Use the buttons underneath the table to move and remove rows, clear the table, and load and save table data.
- Select **File** to read vertex coordinate data from a text file where each row represents the x, y, and (in 3D) z coordinates for a vertex in the polygon. Specify the filename in the **Filename** field, or click the **Browse** button. The file must be a text file with the number of columns equal to the dimension of the geometry sequence and one row for each data point. The columns can be separated by space, tab, comma, or semicolon characters. The entries in the file should be numerical. In general, nonnumerical tokens and header lines are ignored. Click the **Import to Table** button to copy the file contents into the data point table and change the **Data source** to **Table**. Changes in the file do not automatically cause the polygon to be rebuilt. To rebuild the node after a change in the file, click the **Rebuild with Current File** button.
- Select **Vectors** to specify the coordinates of the vertices as vectors (lists) in the fields **x**, **y**, and **z** (3D only); ***r*** and **z** in 2D axial symmetry; **xw** and **yw** in work planes. Each field can contain a list of numbers or expressions containing parameters, separated with commas or spaces. Click the **Range** button ( ) to use the **Range** dialog box for specifying the vector of values for each coordinate.

COORDINATE SYSTEM

The coordinate system in which the polygon coordinates above are interpreted (in 3D geometries only). From the **Work plane** list, select **xy-plane** (the default, for a standard global Cartesian coordinate system) or select any work plane defined above this node in the geometry sequence. If you choose a work plane, the work plane and its coordinate system appear in the Graphics window, using an extra coordinate triad with the directions **xw**, **yw**, and **zw** (which are then used to specify the position).

SELECTIONS OF RESULTING ENTITIES

Select the **Resulting objects selection** check box to create predefined selections (for all levels — objects, domains, boundaries, edges, and points — that are applicable) in subsequent nodes in the geometry sequence. To also make all or one of the types of resulting entities (domains, boundaries, and points) that the polygon consists of available as selections in all applicable selection lists (in physics and materials settings, for example), choose an option from the **Show in physics** (**Show in instances** if in a geometry part; **Show in 3D** in a plane geometry under a work plane in a 3D component) list: **All levels**, **Domain selection** (2D only), **Boundary selection** (2D only), **Edge selection** (3D only) or **Point selection**. The default is **Domain selection** in 2D and **Edge selection** in 3D. These selections do not appear as separate selection nodes in the model tree. Select **Off** to not make any selection available outside of the geometry sequence. From the **Color** list, choose a color for highlighting the resulting objects selection. See Selection Colors.

Cumulative Selection

If you want to make the resulting entities contribute to a cumulative selection, select a cumulative selection from the **Contribute to** list (the default, **None**, gives no contribution), or click the **New** button to create a new cumulative selection (see Cumulative Selections).

Pyramid

To create a rectangular pyramid or pyramid frustum, in the **Geometry** toolbar, from the **More Primitives** ( ) menu, select **Pyramid** ( ). You can also right-click the **Geometry** node to add this node from the context menu. Then enter the properties of the pyramid using the following sections:

OBJECT TYPE

From the **Type** list, select **Solid** or **Surface** to specify if the pyramid is a solid object or a (hollow) surface object.

SIZE AND SHAPE

Define the size and shape of the pyramid in the **Base length 1**, **Base length 2**, **Height**, **Ratio**, **Top displacement 1**, and **Top displacement 2** fields. The **Base length** fields determine (default: 1) the side lengths of the bottom rectangle. The **Height** field (default: 1) determines the height of the pyramid frustum. The **Ratio** field (default: 0.5) controls the ratio of the perimeters of the top and bottom rectangles. To get an oblique pyramid, use the **Top displacement** fields (default: 0) to specify the displacement of the top rectangle's center relative to the bottom rectangle's center, in the pyramid's local coordinate system.

POSITION

Enter the position of the pyramid using the **x**, **y**, and **z** fields. This is the center of the bottom rectangle.

AXIS

Specify the direction of the third axis of the pyramid's local coordinate system — that is, the normal to the base rectangle. From the **Axis type** list, choose **x-axis**, **y-axis**, or **z-axis** (the default) to obtain an axis aligned with the specified coordinate axis. Choose **Cartesian** to enter a direction vector using the **x**, **y**, and **z** fields. Choose **Spherical** to enter the direction using the angles **theta** (polar, zenith) and **phi** (azimuth).

ROTATION ANGLE

Specify the rotational angle about the axis in the **Rotation** field. When this angle is zero (the default), the second axis of the pyramid's local coordinate system (corresponding to **Base length 2**) is parallel to the *xy*-plane.

COORDINATE SYSTEM

The coordinate system in which the position, axis, and rotation angles above are interpreted. From the **Work plane** list, select **xy-plane** (the default, for a standard global Cartesian coordinate system) or select any work plane defined above this node in the geometry sequence. If you choose a work plane, the work plane and its coordinate system appear in the Graphics window, using an extra coordinate triad with the directions **xw**, **yw**, and **zw** (which are then used to specify the pyramid's position).

SELECTIONS OF RESULTING ENTITIES

Select the **Resulting objects selection** check box to create predefined selections (for all levels — objects, domains, boundaries, edges, and points — that are applicable) in subsequent nodes in the geometry sequence. To also make all or one of the types of resulting entities (domains, boundaries, edges, and points) that the pyramid consists of available as selections in all applicable selection lists (in physics and materials settings, for example), choose an option from the **Show in physics** (**Show in instances** if in a geometry part) list: **All levels**, **Domain selection**, **Boundary selection**, **Edge selection**, or **Point selection**. The default is **Domain selection**, which is suitable for use with materials and physics defined in domains. For use with a boundary condition, for example, choose **Boundary selection**. These selections do not appear as separate selection nodes in the model tree. Select **Off** to not make any selection available outside of the geometry sequence. From the **Color** list, choose a color for highlighting the resulting objects selection. See Selection Colors.

Cumulative Selection

If you want to make the resulting entities contribute to a cumulative selection, select a cumulative selection from the **Contribute to** list (the default, **None**, gives no contribution), or click the **New** button to create a new cumulative selection (see Cumulative Selections).

Quadratic Bézier

A quadratic Bézier curve is a curve object in 2D or 3D having a single edge defined by a rational function of degree 2.To create a quadratic Bézier curve, you can:

- Right-click the 2D or 3D **Geometry** node and add a **Quadratic Bézier** node ( ) (in 3D from the **More Primitives** submenu) to the sequence, then define it in the **Settings** window, or
- Select **Quadratic Bézier** from the **More Primitives** menu on the **Geometry** toolbar **Primitives** group to add a **Quadratic Bézier** node ( )the sequence, then define it in the **Settings** window, or
- On the 2D **Sketch** toolbar **Draw** group, select **Quadratic**. Then draw the quadratic curve segments of a Bézier curve in the Graphics window. Also see Drawing Geometric Primitives in the Graphics Window.

If desired, enter the properties of the quadratic Bézier curve using the following sections:

CONTROL POINTS

Specify the coordinates for the three control points. The first and third control points are the endpoints of the Bézier curve. The second control point determines the tangent directions at the endpoints.

WEIGHTS

Specify the weights for each control point. The weights are used in the denominator of the rational function. The default weights are 1, 1/sqrt(2), 1, which gives a circular arc if the control points are three corners of a square.

COORDINATE SYSTEM

	This section is only available in 3D geometries.

The coordinate system in which the Bézier curve coordinates above are interpreted. From the **Work plane** list, select **xy-plane** (the default, for a standard global Cartesian coordinate system) or select any work plane defined above this node in the geometry sequence. If you choose a work plane, the work plane and its coordinate system appear in the Graphics window, using an extra coordinate triad with the directions **xw**, **yw**, and **zw** (which are then used to specify the curve's position).

SELECTIONS OF RESULTING ENTITIES

	This section is not available if the **Cubic Bézier** node is a subnode under a **Composite Curve** node.

Select the **Resulting objects selection** check box to create predefined selections (for all levels — objects, domains, boundaries, edges, and points — that are applicable) in subsequent nodes in the geometry sequence. To also make all or one of the types of resulting entities (domains, boundaries, edges, and points) that the cone consists of available as selections in all applicable selection lists (in physics and materials settings, for example), choose an option from the **Show in physics** (**Show in instances** if in a geometry part) list: **All levels**, **Domain selection**, **Boundary selection**, **Edge selection**, or **Point selection**. The default is **Domain selection**, which is suitable for use with materials

and physics defined in domains. For use with a boundary condition, for example, choose **Boundary selection**. These selections do not appear as separate selection nodes in the model tree. Select **Off** to not make any selection available outside of the geometry sequence. From the **Color** list, choose a color for highlighting the resulting objects selection. See Selection Colors.

Cumulative Selection

If you want to make the resulting entities contribute to a cumulative selection, select a cumulative selection from the **Contribute to** list (the default, **None**, gives no contribution), or click the **New** button to create a new cumulative selection (see Cumulative Selections).

Rectangle

To create a rectangle, you can:

- Right-click the **Geometry** node and add a **Rectangle** node to the sequence then define it in the **Settings** window, or
- In the **Geometry** toolbar **Draw** group, from the **Rectangle** ( ) menu, select **Rectangle** ( ) or **Rectangle (Center)** ( ). Then draw the rectangle in the **Graphics** window. Also see Drawing Geometric Primitives in the Graphics Window.

	To draw a rectangle for a 2D model, click **Rectangle** or **Rectangle (Center)**. Then, click one corner (or the center) of the rectangle in the **Graphics** window. Drag the mouse to the desired position of a corner. When you release the mouse button, a solid rectangle appears, and a **Rectangle** node appears in the geometry sequence.

When you have added a node or finished drawing the rectangle in the **Graphics** window, you can use the following section to define it or fine tune it.

OBJECT TYPE

From the **Type** list, select **Solid** or **Curve** to specify if the rectangle is a solid object or a curve object.

	When using the geometry toolbar, the **Solid** button ( ) is available to toggle between drawing a solid object or an outline (or curve) instead of selecting an **Object Type**. See Geometry Drawing Toolbar Buttons for other drawing toolbar buttons.

SIZE AND SHAPE

Define the size and shape of the rectangle in the **Width** and **Height** fields.

POSITION

Enter the position of the rectangle using the **x** and **y** fields (**r** and **z** in 2D axial symmetry, **xw** and **yw** in work planes). From the **Base** list, choose **Center** if the rectangle is centered about the position, or choose **Corner** if the rectangle has a corner at the position.

ROTATION ANGLE

Specify the counterclockwise rotational angle (default: 0 degrees) about the position the **Rotation** field.

LAYERS

Layers can be used to create sandwich primitives by adding layers on one or more sides. You specify the thicknesses of layers in the **Layers** table, and optionally a name for each layer. The outermost layer comes first. Select the check boxes to specify where to apply the layers. Each layer must have a minimal thickness (depending on the size of the geometry).

SELECTIONS OF RESULTING ENTITIES

Select the **Resulting objects selection** check box to create predefined selections (for all levels — objects, domains, boundaries, and points — that are applicable) in subsequent nodes in the geometry sequence. To also make all or one of the types of resulting entities (domains, boundaries, edges, and points) that the rectangle consists of available as selections in all applicable selection lists (in physics and materials settings, for example), choose an option from the **Show in physics** (**Show in instances** if in a geometry part; **Show in 3D** in a plane geometry under a work plane in a 3D component) list: **All levels**, **Domain selection**, **Boundary selection**, or **Point selection**. The default is **Domain selection**, which is suitable for use with materials and physics defined in domains. For use with a boundary condition, for example, choose **Boundary selection**. These selections do not appear as separate selection nodes in the model tree. Select **Off** to not make any selection available outside of the geometry sequence. From the **Color** list, choose a color for highlighting the resulting objects selection. See Selection Colors.

Cumulative Selection

If you want to make the resulting entities contribute to a cumulative selection, select a cumulative selection from the **Contribute to** list (the default, **None**, gives no contribution), or click the **New** button to create a new cumulative selection (see Cumulative Selections).

Sphere

To create a sphere or ball, in the **Geometry** toolbar click **Sphere** ( ). You can also right-click the **Geometry** node to add this node from the context menu. Then enter the properties of the sphere using the following sections:

OBJECT TYPE

From the **Type** list, select **Solid** or **Surface** to specify if the sphere is a solid object or a (hollow) surface object.

SIZE

Define the radius of the sphere in the **Radius** field.

POSITION

Enter the position of the sphere's center using the **x**, **y**, and **z** fields.

AXIS

Specify the direction of the third axis of the sphere's local coordinate system. From the **Axis type** list, choose **x-axis**, **y-axis**, or **z-axis** (the default) to obtain an axis aligned with the specified coordinate axis. Choose **Cartesian** to enter a direction vector using the **x**, **y**, and **z** fields. Choose **Spherical** to enter the direction using the angles **theta** (polar, zenith) and **phi** (azimuth).

ROTATION ANGLE

Specify the rotational angle about the axis in the **Rotation** field. When this angle is zero (the default), the second axis of the sphere's local coordinate system is parallel to the *xy*-plane.

COORDINATE SYSTEM

The coordinate system in which the position, axis, and rotation angles above are interpreted. From the **Work plane** list, select **xy-plane** (the default, for a standard global Cartesian coordinate system) or select any work plane defined above this node in the geometry sequence. If you choose a work plane, the work plane and its coordinate system appear in the Graphics window, using an extra coordinate triad with the directions **xw**, **yw**, and **zw** (which are then used to specify the sphere's position).

LAYERS

Layers can be used to create sandwich primitives by adding several concentric spheres. You specify the thicknesses and, optionally, names of each layer in the **Layers** table. The outermost layer comes first. The layers are positioned inside the sphere's radius. Each layer must have a minimal thickness (depending on the size of the geometry).

SELECTIONS OF RESULTING ENTITIES

Select the **Resulting objects selection** check box to create predefined selections (for all levels — objects, domains, boundaries, edges, and points — that are applicable) in subsequent nodes in the geometry sequence. To also make all or one of the types of resulting entities (domains, boundaries, edges, and points) that the sphere consists of available as selections in all applicable selection lists (in physics and materials settings, for example), choose an option from the **Show in physics** (**Show in instances** if in a geometry part) list: **All levels**, **Domain selection**, **Boundary selection**, **Edge selection**, or **Point selection**. The default is **Domain selection**, which is suitable for use with materials and physics defined in domains. For use with a boundary condition, for example, choose **Boundary selection**. These selections do not appear as separate selection nodes in the model tree. Select **Off** to not make any selection available outside of the geometry sequence. From the **Color** list, choose a color for highlighting the resulting objects selection. See Selection Colors.

Cumulative Selection

If you want to make the resulting entities contribute to a cumulative selection, select a cumulative selection from the **Contribute to** list (the default, **None**, gives no contribution), or click the **New** button to create a new cumulative selection (see Cumulative Selections).

Square

To create a square, you can:

- Right-click the **Geometry** node and add a **Square** node to the sequence, then define it in the **Settings** window, or
- In the **Geometry** toolbar **Draw** group, from the **Rectangle** ( ) menu, select **Square** ( ) or **Square (Center)** ( ). Then draw the square in the Graphics window. Also see Drawing Geometric Primitives in the Graphics Window.

	To draw a square, click Square or Square (Center). Then, click one corner (or the center) of the square in the Graphics window. Drag the mouse to the desired position of a corner. When you release the mouse button, a solid square appears, and a **Square** node is added to the geometry sequence.

When you have added a node or finished drawing the square in the Graphics window, you can use the following section to define it or fine tune it.

OBJECT TYPE

From the **Type** list, select **Solid** or **Curve** to specify if the square is a solid object or a curve object.

	When using the geometry toolbar, the **Solid** button ( ) is available to toggle between drawing a solid object or an outline (or curve) instead of selecting an **Object Type**. See Geometry Drawing Toolbar Buttons for other drawing toolbar buttons.

SIZE

Define the size of the square in the **Side length** field.

POSITION

Enter the position of the square using the **x** and **y** fields (**r** and **z** in 2D axial symmetry, **xw** and **yw** in work planes). From the **Base** list, choose **Center** if the square is centered about the position, or choose **Corner** if the square has a corner at the position.

ROTATION ANGLE

Specify the counterclockwise rotational angle about the position the **Rotation** field.

LAYERS

Layers can be used to create sandwich primitives by adding layers on one or more sides. You specify the thicknesses of layers in the **Layers** table and optionally a name for each layer. The outermost layer comes first. Select the check boxes to specify where to apply the layers. Each layer must have a minimal thickness (depending on the size of the geometry).

SELECTIONS OF RESULTING ENTITIES

Select the **Resulting objects selection** check box to create predefined selections (for all levels — objects, domains, boundaries, edges, and points — that are applicable) in subsequent nodes in the geometry sequence. To also make all or one of the types of resulting entities (domains, boundaries, edges, and points) that the square consists of available as selections in all applicable selection lists (in physics and materials settings, for example), choose an option from the **Show in physics** (**Show in instances** if in a geometry part; **Show in 3D** in a plane geometry under a work plane in a 3D component) list: **All levels**, **Domain selection**, **Boundary selection**, **Edge selection**, or **Point selection**. The default is **Domain selection**, which is suitable for use with materials and physics defined in domains. For use with a boundary condition, for example, choose **Boundary selection**. These selections do not appear as separate selection nodes in the model tree. Select **Off** to not make any selection available outside of the geometry sequence. From the **Color** list, choose a color for highlighting the resulting objects selection. See Selection Colors.

Cumulative Selection

If you want to make the resulting entities contribute to a cumulative selection, select a cumulative selection from the **Contribute to** list (the default, **None**, gives no contribution), or click the **New** button to create a new cumulative selection (see Cumulative Selections).

Tetrahedron

To create a tetrahedron, in the **Geometry** toolbar, from the **More Primitives** ( ) menu, select **Tetrahedron** ( ).You can also right-click the **Geometry** node to add this node from the context menu.

OBJECT TYPE

From the **Type** list, select **Solid** or **Surface** to specify if the tetrahedron is a solid object or a (hollow) surface object.

VERTICES

Define the position, size, and shape of the tetrahedron by specifying the coordinates of its vertices. Vertices 1–3 are the vertices of the bottom face in clockwise order. Vertex 4 is the top vertex.

COORDINATE SYSTEM

The coordinate system in which the coordinates of the vertices above are interpreted. From the **Work plane** list, select **xy-plane** (the default, for a standard global Cartesian coordinate system) or select any work plane defined above this node in the geometry sequence. If you choose a work plane, the work plane and its coordinate system appear in the **Graphics** window, using an extra coordinate triad with the directions **xw**, **yw**, and **zw** (which are then used to specify the tetrahedron's position).

SELECTIONS OF RESULTING ENTITIES

Select the **Resulting objects selection** check box to create predefined selections (for all levels — objects, domains, boundaries, edges, and points — that are applicable) in subsequent nodes in the geometry sequence. To also make all or one of the types of resulting entities (domains, boundaries, edges, and points) that the tetrahedron consists of available as selections in all applicable selection lists (in physics and materials settings, for example), choose an option from the **Show in physics** (**Show in instances** if in a geometry part) list: **All levels**, **Domain selection**, **Boundary selection**, **Edge selection**, or **Point selection**. The default is **Domain selection**, which is suitable for use with materials and physics defined in domains. For use with a boundary condition, for example, choose **Boundary selection**. These selections do not appear as separate selection nodes in the model tree. Select **Off** to not make any selection available outside of the geometry sequence. From the **Color** list, choose a color for highlighting the resulting objects selection. See Selection Colors.

Cumulative Selection

If you want to make the resulting entities contribute to a cumulative selection, select a cumulative selection from the **Contribute to** list (the default, **None**, gives no contribution), or click the **New** button to create a new cumulative selection (see Cumulative Selections).

Torus

To create a torus, in the **Geometry** toolbar, from the **More Primitives** ( ) menu, select **Torus** ( ). You can also right-click the **Geometry** node to add a **Torus**.

OBJECT TYPE

From the **Type** list, select **Solid** or **Surface** to specify if the torus is a solid object or a (hollow) surface object.

SIZE AND SHAPE

Define the size and shape of the torus in the **Major radius**, **Minor radius**, **Revolution angle** and **Interior faces** fields. The **Major radius** (default: 1) field controls the distance from the center of the cross section to the center of the torus. The **Minor radius** (default: 0.5) field controls the radius of the cross section. To get less than a full revolution (360 degrees, the default), use the **Revolution angle** field. Select the **Interior faces** check box to create cross-sectional faces that partition the domain of a **Solid** torus.

POSITION

Enter the position of the torus' center using the **x**, **y**, and **z** fields.

AXIS

Specify the direction of the third axis of the torus' local coordinate system — that is, the normal to the plane of directrix circle. From the **Axis type** list, choose **x-axis**, **y-axis**, or **z-axis** (the default) to obtain an axis aligned with the specified coordinate axis. Choose **Cartesian** to enter a direction vector using the **x**, **y**, and **z** fields. Choose **Spherical** to enter the direction using the angles **theta** (polar, zenith) and **phi** (azimuth).

ROTATION ANGLE

Specify the rotational angle about the axis in the **Rotation** field. When this angle is zero, the second axis of the torus' local coordinate system is parallel to the *xy*-plane.

COORDINATE SYSTEM

The coordinate system in which the position, axis, and rotation angles above are interpreted. From the **Work plane** list, select **xy-plane** (the default, for a standard global Cartesian coordinate system) or select any work plane defined above this node in the geometry sequence. If you choose a work plane, the work plane and its coordinate system appear in the Graphics window, using an extra coordinate triad with the directions **xw**, **yw**, and **zw** (which are then used to specify the position of the torus).

SELECTIONS OF RESULTING ENTITIES

Select the **Resulting objects selection** check box to create predefined selections (for all levels — objects, domains, boundaries, edges, and points — that are applicable) in subsequent nodes in the geometry sequence. To also make all or one of the types of resulting entities (domains, boundaries, edges, and points) that the torus consists of available as selections in all applicable selection lists (in physics and materials settings, for example), choose an option from the **Show in physics** (**Show in instances** if in a geometry part) list: **All levels**, **Domain selection**, **Boundary selection**, **Edge selection**, or **Point selection**. The default is **Domain selection**, which is suitable for use with materials and physics defined in domains. For use with a boundary condition, for example, choose **Boundary selection**. These selections do not appear as separate selection nodes in the model tree. Select **Off** to not make any selection available outside of the geometry sequence. From the **Color** list, choose a color for highlighting the resulting objects selection. See Selection Colors.

Cumulative Selection

If you want to make the resulting entities contribute to a cumulative selection, select a cumulative selection from the **Contribute to** list (the default, **None**, gives no contribution), or click the **New** button to create a new cumulative selection (see Cumulative Selections).

Composite Object (Backward Compatibility)

If you open a model from an older version of COMSOL Multiphysics (versions 4.0–5.2a), and it was originally created in the 3.5a version of COMSOL Multiphysics, one **Composite Object** node ( ) appears for each nonprimitive geometry object in the model. The **Composite Object** node contains the following sections.

COMPOSITE OBJECT

If you save the model as a `.java` file, COMSOL Multiphysics uses the filename specified in the **Filename** field to determine the path to a geometry file, containing the geometry object, that appears together with the `.java` file. The software uses this geometry file when you run the resulting `.java` file. By default, the filename has the prefix $FILENAME$. If the filename starts with this prefix, COMSOL Multiphysics stores the geometry file in the same directory as the `.java` file. It is also possible to remove this prefix and specify the full path to the geometry file.

SELECTIONS OF RESULTING ENTITIES

Select the **Resulting objects selection** check box to create predefined selections (for all levels — objects, domains, boundaries, edges, and points — that are applicable) in subsequent nodes in the geometry sequence. To also make all or one of the types of resulting entities (domains, boundaries, edges, and points) that the object consists of available as selections in all applicable selection lists (in physics and materials settings, for example), choose an option from the **Show in physics** list: **All levels**, **Domain selection**, **Boundary selection**, **Edge selection**, or **Point selection**. The default is **Domain selection**, which is suitable for use with materials and physics defined in domains. For use with a boundary condition, for example, choose **Boundary selection**. These selections do not appear as separate selection nodes in the model tree. Select **Off** to not make any selection available outside of the geometry sequence. From the **Color** list, choose a color for highlighting the resulting objects selection. See Selection Colors.

Cumulative Selection

If you want to make the resulting entities contribute to a cumulative selection, select a cumulative selection from the **Contribute to** list (the default, **None**, gives no contribution), or click the **New** button to create a new cumulative selection (see Cumulative Selections).

Geometry Operations

This section describes the available geometry operations (Work Plane Operations, Boolean and Partition Operations, Transform Operations, Conversion Operations, Other Geometry Operations, and Programming). The features in Table 7-5, Table 7-6, Table 7-7, Table 7-8, and Table 7-9,are also available as buttons on The Geometry Toolbar.

	See Virtual Geometry and Mesh Control Operations for examples of how to use virtual geometry operations to remove a short edge and to ignore and collapse edges to prepare the geometry for efficient meshing. You can use several of these operations to also control the mesh.

WORK PLANE OPERATIONS

The following table lists operations available with work planes in 3D geometries:

TABLE 7-5: WORK PLANE RELATED OPERATIONS FOR 3D MODELS

ICON	NAME	DESCRIPTION
	Cross Section	Create a 2D cross section from an intersection between a 3D geometry and a work plane.
	Extrude	Extrude planar objects into 3D.
	Revolve	Revolve planar objects into 3D.
	Sweep	To sweep one or several faces along a spine curve.
	Work Plane	Create a work plane for drawing 2D objects that are embedded in 3D.

BOOLEAN AND PARTITION OPERATIONS

Use Boolean and Partition operations to create a *composite geometry object* by forming unions, set differences, and set intersections — and combinations of those operations — of existing geometry objects.

The following Boolean and Partitions operations are available in all space dimensions:

TABLE 7-6: BOOLEAN AND PARTITION OPERATIONS

ICON	NAME	SPACE DIMENSION	DESCRIPTION
	Compose	1D, 2D, 3D	Compose geometry objects by specifying Boolean operations using a set formula.
	Difference	1D, 2D, 3D	Select the objects to compose in the Graphics window and click the Difference button to take the selected object with the largest volume (area, length) and subtract the others.
	Intersection	1D, 2D, 3D	Select the objects to intersect in the Graphics window and click the Intersection button to create an intersection of the selected objects.
	Partition Objects	1D, 2D, 3D	Partition geometry objects using a work plane or other geometry objects (tool objects).
	Partition Domains	2D, 3D	Partition selected domains using lines or edges.
	Partition Edges	2D, 3D	Partition selected edges at specified locations.

TABLE 7-6: BOOLEAN AND PARTITION OPERATIONS

ICON	NAME	SPACE DIMENSION	DESCRIPTION
	Partition Faces	3D	Partition selected faces at specified locations.
	Union	1D, 2D, 3D	Select the objects to unite in the Graphics window and click the Union button to create a union of the selected objects.

TRANSFORM OPERATIONS

You can use the transforms to create rectangular and linear arrays of identical geometry objects and to move, rotate, mirror, scale, and make rigid transformations geometry objects. Mirroring, moving, rotating, and scaling are *affine transformations* applied to geometry objects. All transforms are available in all space dimensions, except Rotate, which is not applicable for 1D geometries, and Rigid Transform, which is only applicable in 3D.

TABLE 7-7: GEOMETRY TRANSFORM OPERATIONS

ICON	NAME	SPACE DIMENSION	DESCRIPTION
	Array	1D, 2D, 3D	Create an array of geometry objects.
	Copy	1D, 2D, 3D	Copy geometry objects.
	Mirror	1D, 2D, 3D	Mirror geometry objects in a plane (3D), a line (2D), or a point (1D).
	Move	1D, 2D, 3D	Move geometry objects.
	Rigid Transform	3D	Perform a rigid transformation of geometry objects.
	Rotate	2D, 3D	Rotate geometry objects about a centerpoint.
	Scale	1D, 2D, 3D	Scale geometry objects about a centerpoint.

CONVERSION OPERATIONS

The geometry conversion operations make it possible to, for example, convert a 3D solid to a surface (boundary) object for modeling a shell or other thin structure. You can perform the following geometry object conversions:

	For 2D models: • Convert a solid object into a curve or point object. • Convert a curve object defining at least one closed domain into a solid object. • Convert a curve object into a point object.

	For 3D models: • Convert a solid object into a surface, curve, or point object. • Convert a surface object defining at least one closed domain into a solid object. • Convert a surface object into a curve or point object. • Convert a curve object into a point object.

TABLE 7-8: GEOMETRY CONVERSION OPERATIONS

ICON	NAME	SPACE DIMENSION	DESCRIPTION
	Convert to Curve	2D, 3D	Select the objects to convert in the Graphics window and click to unite them and convert them to a curve object.
	Convert to Point	1D, 2D, 3D	Select the objects to convert in the Graphics window and click to unite them and convert them to a point object.
	Convert to Solid	1D, 2D, 3D	Select the objects to convert in the Graphics window and click to unite them and convert them to a solid object.
	Convert to Surface	3D	Select the objects to convert in the Graphics window and click to unite them and convert them to a surface object.
	Convert to COMSOL	3D	Available with the CAD Import Module. Select the objects to convert in the Graphics window, and then click to convert them to a COMSOL kernel representation. See the *CAD Import Module User's Guide*.
	Split	1D, 2D, 3D	Split one or several objects into their entities.

OTHER GEOMETRY OPERATIONS

For 2D geometry objects, you can use geometry operations such as fillets and tangents to construct the geometry. In all space dimensions you can delete geometry objects or geometric entities (domains, boundaries, edges, and points).

The following table provides an overview of available general geometry operations:

TABLE 7-9: OTHER GEOMETRY OPERATIONS

ICON	NAME	SPACE DIMENSION	DESCRIPTION
	Chamfer	2D	Create chamfers at a set of corners of a 2D geometry object.
	Fillet	2D	Create fillets at a set of corners of a 2D geometry object.
	Tangent	2D	Create a tangent from an edge to another edge or point in a 2D geometry.
	Delete Entities	1D, 2D, 3D	To delete geometric entities (domains, boundaries, edges, or points) from the objects they belong to, or to delete entire geometry objects, select the entities or objects and click the Delete button. If you delete objects corresponding to primitive features, these nodes are removed from the sequence. If you delete other objects or geometric entities, a Delete Entities node is added to the sequence. If instead you use the Delete Entities context menu item, a Delete Entities always displays.
	Edit Object	2D	To edit a 2D object using the Settings window, in the Model Builder, right-click the Geometry node and select Edit Object from the context menu. To edit a 2D object using the Graphics window, select the object and click the Edit Object button. See Editing 2D Geometry Objects.
	Import	1D, 2D, 3D	Import geometry objects from a file or from another geometry.

PARTS

You can use parts to simplify the geometry modeling with custom parts that can be reused and created as part instances in a geometry sequence:

TABLE 7-10: PARTS

ICON	NAME	DESCRIPTION	SEE
	Part Libraries	Open the Part Libraries window.	
	Load Parts	Load parts from another MPH-file.	Using Geometry Parts
	Part	Create a global part of the same dimension as the current component.	Using Geometry Parts
	Part Instance	Create a part instance in the current geometry or part.	Part Instance

PROGRAMMING

You can use If, Else If, Else, and End If nodes to create If statements that enable or disable other features depending on values of logical conditions in terms of parameters. The Parameter Check node makes it possible to check the value of parameters (for example, to limit the value of an input parameter).

TABLE 7-11: PROGRAMMING AND LOGICAL OPERATIONS

ICON	NAME	DESCRIPTION	SEE
	If	Begin an If statement.	If, Else If, Else, End If
	Else If	Continue an If statement.	
	Else	Last alternative in an If statement.	
	End If	End an If statement.	
	Parameter Check	Check the value of parameters.	

Array

To create a block-shaped (3D), rectangular (2D, 3D), or linear array of identical geometry objects, in the **Geometry** toolbar **Transforms** ( ) menu, select **Array** ( ). You can also right-click the **Geometry** node to add this node from the **Transforms** submenu. Then enter the properties of the array operation using the following sections:

INPUT

Select the geometry objects that you want to duplicate in the **Graphics** window. The objects appear in the **Input objects** list. If the geometry sequence includes user-defined selections above the **Array** node, choose **Manual** to select objects, or choose one of the selection nodes from the list next to **Input objects**.

Click the **Active** button to toggle between turning ON and OFF the **Input objects** selections.

SIZE

In 2D and 3D, you get a rectangular (in 2D) or three-dimensional (in 3D) array by default. Enter the number of duplicates in each coordinate direction in the **x size**, **y size**, and **z size** fields; ***r* size** and **z size** in 2D axial symmetry; **xw size** and **yw size** in work planes.

To create a linear array of objects in 2D or 3D, change **Array type** to **Linear**. Enter the number of duplicates in the **Size** field.

In 1D, enter the number of duplicates in the **Size** field.

DISPLACEMENT

Set the displacement in each coordinate direction in the **x**, **y**, and **z** fields (not all fields are available in 1D and 2D).

COORDINATE SYSTEM

The coordinate system in which the displacement coordinates above are interpreted (in 3D geometries only). From the **Work plane** list, select **xy-plane** (the default, for a standard global Cartesian coordinate system) or select any work plane defined above this node in the geometry sequence. If you choose a work plane, the work plane and its coordinate system appears in the Graphics window, using an extra coordinate triad with the directions **xw**, **yw**, and **zw** (which are then used to specify the array displacement).

SELECTIONS OF RESULTING ENTITIES

Select the **Resulting objects selection** check box to create predefined selections (for all levels — objects, domains, boundaries, edges, and points — that are applicable) in subsequent nodes in the geometry sequence. To also make all or one of the types of resulting entities (domains, boundaries, edges, and points) that the resulting objects consist of available as selections in all applicable selection lists (in physics and materials settings, for example), choose an option from the **Show in physics** (**Show in instances** if in a geometry part; **Show in 3D** in a plane geometry under a work plane in a 3D component) list: **All levels**, **Domain selection**, **Boundary selection**, **Edge selection**, or **Point selection**. The default is **Domain selection**, which is suitable for use with materials and physics defined in domains. For use with a boundary condition, for example, choose **Boundary selection**. These selections do not appear as separate selection nodes in the model tree. Select **Off** to not make any selection available outside of the geometry sequence. From the **Color** list, choose a color for highlighting the resulting objects selection. See Selection Colors.

Cumulative Selection

If you want to make the resulting entities contribute to a cumulative selection, select a cumulative selection from the **Contribute to** list (the default, **None**, gives no contribution), or click the **New** button to create a new cumulative selection (see Cumulative Selections).

Chamfer

Use a **Chamfer** ( ) node to chamfer (cut) corners in 2D geometry objects and create a chamfered (beveled) edge. Enter the properties of the chamfer operation using the following sections:

POINTS

Select the points (vertices) that you want to chamfer in the Graphics window. They then appear in the **Vertices to chamfer** list. If the geometry sequence includes user-defined selections above the **Chamfer** node, choose **Manual** to select points, or choose one of the selection nodes from the list next to **Vertices to chamfer**.

Click the **Active** button to toggle between turning ON and OFF the **Vertices to chamfer** selections.

DISTANCE

In the **Distance from vertex** field, enter the distance from the vertex to the endpoints of the chamfer segment.

SELECTIONS OF RESULTING ENTITIES

Select the **Resulting objects selection** check box to create predefined selections (for all levels — objects, domains, boundaries, edges, and points — that are applicable) in subsequent nodes in the geometry sequence. To also make all or one of the types of resulting entities (domains, boundaries, edges, and points) that the resulting objects consist of available as selections in all applicable selection lists (in physics and materials settings, for example), choose an option from the **Show in physics** (**Show in instances** if in a geometry part; **Show in 3D** in a plane geometry under a work plane in a 3D component) list: **All levels**, **Domain selection**, **Boundary selection**, **Edge selection**, or **Point selection**. The default is **Domain selection**, which is suitable for use with materials and physics defined in domains. For use with a boundary condition, for example, choose **Boundary selection**. These selections do not appear as separate selection

nodes in the model tree. Select **Off** to not make any selection available outside of the geometry sequence. From the **Color** list, choose a color for highlighting the resulting objects selection. See Selection Colors.

Cumulative Selection

If you want to make the resulting entities contribute to a cumulative selection, select a cumulative selection from the **Contribute to** list (the default, **None**, gives no contribution), or click the **New** button to create a new cumulative selection (see Cumulative Selections).

LOCATION IN USER INTERFACE

To chamfer corners in 2D geometry objects, in the **Geometry** toolbar click **Chamfer** ( ). You can also right-click the **Geometry** node to add this node from the context menu.

	The Design Module supports chamfering of corners in 3D geometries.

Compose

To create a composite geometry object from other geometry objects using Boolean operations given in a set formula, use a **Compose** ( ) node. Enter the properties of the compose operation as a set formula using the following sections:

COMPOSE

Select the geometry objects that you want to compose in the Graphics window. The objects appear in the **Input objects** list. If the geometry sequence includes user-defined selections above the **Compose** node, choose **Manual** to select objects, or choose one of the selection nodes from the list next to **Input objects**.

Click the **Active** button to toggle between turning ON and OFF the **Input objects** selections.

Select the **Keep input objects** check box to use the selected solid geometry objects for further geometry operations.

In the **Set formula** field, enter a set formula involving the names of the selected geometry objects — for example, `r1+c1*(c2-r2)` — to take the union of `r1` and the object that is the result of the intersection between `c1` and the set difference where `r2` is subtracted from `c2`. Use the binary operations `+`, `*`, and `-` for set union, set intersection, and set difference, respectively. The precedence of the operators `+` and `-` are the same. The operator `*` has higher precedence. You can override the precedence rules using parentheses. When you change the set formula, the **Input objects** selection is automatically updated.

To create a geometry object without interior boundaries, clear the **Keep interior boundaries** check box. This can be useful to simplify a geometry where the interior boundaries do not separate domains with different physics nodes or materials, for example.

You can change the settings for the **Repair tolerance** list if you experience problems with the compose operation. Geometric entities that have a distance less than the repair tolerance are merged.

- The default value in the **Repair tolerance** list is **Automatic**, which for 3D objects represented using the CAD kernel determines the repair tolerance internally. For 3D objects represented using the COMSOL kernel, and for 2D and 1D objects, **Automatic** means a relative repair tolerance of 10^{-6}.
- Choose **Relative** to enter a value for the **Relative repair tolerance** field (the default is determined by the main **Geometry** node's setting). This value is relative to the largest absolute value of the coordinates of all input objects.
- Choose **Absolute** to enter a value for the **Absolute repair tolerance** field (the default is determined by the main **Geometry** node's setting; SI unit: m). This value uses the same unit as the geometry sequence's length unit.

When you build this feature, the relative and absolute repair tolerances are set to the values that are used (with a precision of two digits), which can be useful when you have set **Repair tolerance** to **Automatic**.

SELECTIONS OF RESULTING ENTITIES

Select the **Resulting objects selection** check box to create predefined selections (for all levels — objects, domains, boundaries, edges, and points — that are applicable) in subsequent nodes in the geometry sequence. To also make all or one of the types of resulting entities (domains, boundaries, edges, and points) that the resulting objects consist of available as selections in all applicable selection lists (in physics and materials settings, for example), choose an option from the **Show in physics** (**Show in instances** if in a geometry part; **Show in 3D** in a plane geometry under a work plane in a 3D component) list: **All levels**, **Domain selection**, **Boundary selection**, **Edge selection**, or **Point selection**. The default is **Domain selection**, which is suitable for use with materials and physics defined in domains. For use with a boundary condition, for example, choose **Boundary selection**. These selections do not appear as separate selection nodes in the model tree. Select **Off** to not make any selection available outside of the geometry sequence. From the **Color** list, choose a color for highlighting the resulting objects selection. See Selection Colors.

Cumulative Selection

If you want to make the resulting entities contribute to a cumulative selection, select a cumulative selection from the **Contribute to** list (the default, **None**, gives no contribution), or click the **New** button to create a new cumulative selection (see Cumulative Selections).

LOCATION IN USER INTERFACE

In the **Geometry** toolbar, from the **Boolean and Partitions** ( ) menu, select **Compose** ( ).You can also right-click the **Geometry** node to add this node from the **Boolean and Partitions** submenu.

Convert to Curve

Use the **Convert to Curve** ( ) node to unite and convert geometry objects to a single curve object. Enter the properties of the convert operation using the following section:

INPUT

Select the geometry objects that you want to convert in the Graphics window. The objects appear in the **Input objects** list.

Click the **Active** button to toggle between turning ON and OFF the **Input objects** selections.

Select the **Keep input objects** check box to use the selected geometry objects for further geometry operations.

You can change the settings for the **Repair tolerance** list if you experience problems with the convert operation. Geometric entities that have a distance less than the repair tolerance are merged.

- The default value in the **Repair tolerance** list is **Automatic**, which for 3D objects represented using the CAD kernel determines the repair tolerance internally. For 3D objects represented using the COMSOL kernel, and for 2D and 1D objects, **Automatic** means a relative repair tolerance of 10^{-6}.
- Choose **Relative** to enter a value for the **Relative repair tolerance** field (the default is determined by the main **Geometry** node's setting). This value is relative to the largest absolute value of the coordinates of all input objects.
- Choose **Absolute** to enter a value for the **Absolute repair tolerance** field (the default is determined by the main **Geometry** node's setting; SI unit: m). This value uses the same unit as the geometry sequence's length unit.

When you build this feature, the relative and absolute repair tolerances are set to the values that are used (with a precision of two digits), which can be useful when you have set **Repair tolerance** to **Automatic**.

SELECTIONS OF RESULTING ENTITIES

Select the **Resulting objects selection** check box to create predefined selections (for all levels — objects, domains, boundaries, edges, and points — that are applicable) in subsequent nodes in the geometry sequence. To also make all or one of the types of resulting entities (domains, boundaries, edges, and points) that the resulting objects consist of available as selections in all applicable selection lists (in physics and materials settings, for example), choose an option from the **Show in physics** (**Show in instances** if in a geometry part; **Show in 3D** in a plane geometry under a work plane in a 3D component) list: **All levels**, **Boundary selection** (2D), **Edge selection** (3D), or **Point selection**. The default is **Boundary selection** in 2D and **Edge selection** in 3D. These selections do not appear as separate selection nodes in the model tree. Select **Off** to not make any selection available outside of the geometry sequence. From the **Color** list, choose a color for highlighting the resulting objects selection. See Selection Colors.

Cumulative Selection

If you want to make the resulting entities contribute to a cumulative selection, select a cumulative selection from the **Contribute to** list (the default, **None**, gives no contribution), or click the **New** button to create a new cumulative selection (see Cumulative Selections).

LOCATION IN USER INTERFACE

To unite and convert geometry objects to a single curve object, in the **Geometry** toolbar, **Conversions** menu, click **Convert to Curve** ( ). You can also right-click the **Geometry** node to add this node from the **Conversions** submenu.

Convert to Point

Use the **Convert to Point** ( ) node to unite and convert geometry objects to a single point object. Enter the properties of the convert operation using the following sections:

INPUT

Select the geometry objects that you want to convert in the Graphics window. The objects appear in the **Input objects** list.

Click the **Active** button to toggle between turning ON and OFF the **Input objects** selections.

Select the **Keep input objects** check box to use the selected geometry objects for further geometry operations.

You can change the settings for the **Repair tolerance** list if you experience problems with the convert operation. Geometric entities that have a distance less than the repair tolerance are merged.

- The default value in the **Repair tolerance** list is **Automatic**, which for 3D objects represented using the CAD kernel determines the repair tolerance internally. For 3D objects represented using the COMSOL kernel, and for 2D and 1D objects, **Automatic** means a relative repair tolerance of 10^{-6}.
- Choose **Relative** to enter a value for the **Relative repair tolerance** field (the default is determined by the main **Geometry** node's setting). This value is relative to the largest absolute value of the coordinates of all input objects.
- Choose **Absolute** to enter a value for the **Absolute repair tolerance** field (the default is determined by the main **Geometry** node's setting; SI unit: m). This value uses the same unit as the geometry sequence's length unit.

When you build this feature, the relative and absolute repair tolerances are set to the values that are used (with a precision of two digits), which can be useful when you have set **Repair tolerance** to **Automatic**.

SELECTIONS OF RESULTING ENTITIES

Select the **Resulting objects selection** check box to create predefined selections (for all levels — objects, domains, boundaries, edges, and points — that are applicable) in subsequent nodes in the geometry sequence. To also make all or one of the types of resulting entities (domains, boundaries, edges, and points) that the resulting objects consist of available as selections in all applicable selection lists (in physics and materials settings, for example), choose an option from the **Show in physics** (**Show in instances** if in a geometry part; **Show in 3D** in a plane geometry under a

work plane in a 3D component) list: **All levels** or **Point selection**. The default is **Point selection**. These selections do not appear as separate selection nodes in the model tree. Select **Off** to not make any selection available outside of the geometry sequence. From the **Color** list, choose a color for highlighting the resulting objects selection. See Selection Colors.

Cumulative Selection

If you want to make the resulting entities contribute to a cumulative selection, select a cumulative selection from the **Contribute to** list (the default, **None**, gives no contribution), or click the **New** button to create a new cumulative selection (see Cumulative Selections).

LOCATION IN USER INTERFACE

To unite and convert geometry objects to single a point object, in the **Geometry** toolbar, **Conversions** menu, click **Convert to Point** ( ). You can also right-click the **Geometry** node to add this node from the context menu.

Convert to Solid

Use the **Convert to Solid** ( ) node to unite and convert geometry objects to a single solid object. Enter the properties of the convert operation using the following sections:

INPUT

Select the geometry objects that you want to convert in the Graphics window. The objects appear in the **Input objects** list.

Click the **Active** button to toggle between turning ON and OFF the **Input objects** selections.

Select the **Keep input objects** check box to use the selected geometry objects for further geometry operations.

You can change the settings for the **Repair tolerance** list if you experience problems with the convert operation. Geometric entities that have a distance less than the repair tolerance are merged.

- The default value in the **Repair tolerance** list is **Automatic**, which for 3D objects represented using the CAD kernel determines the repair tolerance internally. For 3D objects represented using the COMSOL kernel, and for 2D and 1D objects, **Automatic** means a relative repair tolerance of 10^{-6}.
- Choose **Relative** to enter a value for the **Relative repair tolerance** field (the default is determined by the main **Geometry** node's setting). This value is relative to the largest absolute value of the coordinates of all input objects.
- Choose **Absolute** to enter a value for the **Absolute repair tolerance** field (the default is determined by the main **Geometry** node's setting; SI unit: m). This value uses the same unit as the geometry sequence's length unit.

When you build this feature, the relative and absolute repair tolerances are set to the values that are used (with a precision of two digits), which can be useful when you have set **Repair tolerance** to **Automatic**.

SELECTIONS OF RESULTING ENTITIES

Select the **Resulting objects selection** check box to create predefined selections (for all levels — objects, domains, boundaries, edges, and points — that are applicable) in subsequent nodes in the geometry sequence. To also make all or one of the types of resulting entities (domains, boundaries, edges, and points) that the resulting objects consist of available as selections in all applicable selection lists (in physics and materials settings, for example), choose an option from the **Show in physics** (**Show in instances** if in a geometry part; **Show in 3D** in a plane geometry under a work plane in a 3D component) list: **All levels**, **Domain selection**, **Boundary selection**, **Edge selection**, or **Point selection**. The default is **Domain selection**, which is suitable for use with materials and physics defined in domains. For use with a boundary condition, for example, choose **Boundary selection**. These selections do not appear as separate selection nodes in the model tree. Select **Off** to not make any selection available outside of the geometry sequence. From the **Color** list, choose a color for highlighting the resulting objects selection. See Selection Colors.

Cumulative Selection

If you want to make the resulting entities contribute to a cumulative selection, select a cumulative selection from the **Contribute to** list (the default, **None**, gives no contribution), or click the **New** button to create a new cumulative selection (see Cumulative Selections).

LOCATION IN USER INTERFACE

To unite and convert geometry objects to single a solid object, in the **Geometry** toolbar, **Conversions** menu, click **Convert to Solid** ( ). You can also right-click the **Geometry** node to add this node from the context menu.

Convert to Surface

Use the **Convert to Surface** ( ) node to unite and convert geometry objects to a single surface object in a 3D geometry. You can, for example, convert a solid geometry to a surface object for modeling some type of shell. If the input objects include edges or curves, then any parts of those edges or curves that are outside of the resulting surfaces are removed. If the conversion to a surface results in an empty surface, a **Warning** subnode appears.

	It is not possible to create a 3D surface from a set of connected curves or edges, even if they all lie in a plane and could form a planar surface. In such cases, you can instead create a work plane where you add the connected curves and then create a surface from those curves. If your license includes the CAD Import Module, you can also use a Cap Faces feature to create a surface from a set of connected curves.

Enter the properties of the convert operation using the following sections:

INPUT

Select the geometry objects that you want to convert in the Graphics window. The objects appear in the **Input objects** list.

Click the **Active** button to toggle between turning ON and OFF the **Input objects** selections.

Select the **Keep input objects** check box to use the selected geometry objects for further geometry operations.

You can change the settings for the **Repair tolerance** list if you experience problems with the convert operation. Geometric entities that have a distance less than the repair tolerance are merged.

- The default value in the **Repair tolerance** list is **Automatic**, which for 3D objects represented using the CAD kernel determines the repair tolerance internally. For 3D objects represented using the COMSOL kernel, and for 2D and 1D objects, **Automatic** means a relative repair tolerance of 10^{-6}.
- Choose **Relative** to enter a value for the **Relative repair tolerance** field (the default is determined by the main **Geometry** node's setting). This value is relative to the largest absolute value of the coordinates of all input objects.
- Choose **Absolute** to enter a value for the **Absolute repair tolerance** field (the default is determined by the main **Geometry** node's setting; SI unit: m). This value uses the same unit as the geometry sequence's length unit.

When you build this feature, the relative and absolute repair tolerances are set to the values that are used (with a precision of two digits), which can be useful when you have set **Repair tolerance** to **Automatic**.

SELECTIONS OF RESULTING ENTITIES

Select the **Resulting objects selection** check box to create predefined selections (for all levels — objects, domains, boundaries, edges, and points — that are applicable) in subsequent nodes in the geometry sequence. To also make all or one of the types of resulting entities (domains, boundaries, edges, and points) that the resulting objects consist of available as selections in all applicable selection lists (in physics and materials settings, for example), choose an option from the **Show in physics** (**Show in instances** if in a geometry part) list: **All levels**, **Boundary selection**, **Edge**

selection, or **Point selection**. The default is **Boundary selection**. These selections do not appear as separate selection nodes in the model tree. Select **Off** to not make any selection available outside of the geometry sequence. From the **Color** list, choose a color for highlighting the resulting objects selection. See Selection Colors.

Cumulative Selection

If you want to make the resulting entities contribute to a cumulative selection, select a cumulative selection from the **Contribute to** list (the default, **None**, gives no contribution), or click the **New** button to create a new cumulative selection (see Cumulative Selections).

LOCATION IN USER INTERFACE

To unite and convert geometry objects to a single surface object, in the **Geometry** toolbar, **Conversions** menu, click **Convert to Surface** ( ). You can also right-click the **Geometry** node to add this node from the context menu.

Copy

Use the **Copy** ( ) node to make a displaced copy of one or several geometry objects. This method creates a node in the model tree that contains a reference to other objects in the geometry sequence that are copied and keeps the objects linked (unlike a simple copy and paste function). Enter the properties of the copy operation using the following sections:

INPUT

Select the geometry objects that you want to copy in the Graphics window. The objects appear in the **Input objects** list. If the geometry sequence includes user-defined selections above the **Copy** node, choose **Manual** to select objects, or choose one of the selection nodes from the list next to **Input objects**.

Click the **Active** button to toggle between turning ON and OFF the **Input objects** selections.

Clear the **Keep input objects** check box to remove the input objects.

DISPLACEMENT

From the **Specify** list, choose **Displacement vector** (the default) or **Positions**.

If you choose **Displacement vector**, specify the displacement in each direction by entering **x**, **y**, and **z** (not all fields are available in 1D and 2D geometries); **r** and **z** in 2D axial symmetry; **xw** and **yw** in work planes. To create several copies, enter a comma-separated or space-separated list of displacements in these fields, or click the **Range** button ( ) to use the **Range** dialog box for specifying a range of displacements for moving multiple copies.

If you choose **Positions**, choose **Vertex** (the default) or **Coordinates** from the **Old position** list to specify the old (original) position. If you choose **Vertex**, select a vertex from some geometry object in the Graphics window; otherwise, specify the old position using coordinates. Likewise, choose **Vertices** (the default) or **Coordinates** from the **New position** list to specify the new (destination) positions. Defining the copy operation using positions can be useful in the following situations:

- To copy an object so that a given vertex gets certain coordinates. For example, make the *r*-coordinate exactly 0 in an axisymmetric model.
- To copy a geometry object so that a given vertex coincides with a vertex of another geometry object.
- To copy a geometry object so that a point with given coordinates (for example, the origin of a sphere) is moved to a vertex of another geometry object.

COORDINATE SYSTEM

The coordinate system in which the displacement coordinates above are interpreted (in 3D geometries only). From the **Work plane** list, select **xy-plane** (the default, for a standard global Cartesian coordinate system) or select any work plane defined above this node in the geometry sequence. If you choose a work plane, the work plane and its

coordinate system appears in the Graphics window, using an extra coordinate triad with the directions **xw**, **yw**, and **zw** (which are then used to specify the copy operation's displacement).

SELECTIONS OF RESULTING ENTITIES

Select the **Resulting objects selection** check box to create predefined selections (for all levels — objects, domains, boundaries, edges, and points — that are applicable) in subsequent nodes in the geometry sequence. To also make all or one of the types of resulting entities (domains, boundaries, edges, and points) that the resulting objects consist of available as selections in all applicable selection lists (in physics and materials settings, for example), choose an option from the **Show in physics** (**Show in instances** if in a geometry part; **Show in 3D** in a plane geometry under a work plane in a 3D component) list: **All levels**, **Domain selection**, **Boundary selection**, **Edge selection**, or **Point selection**. The default is **Domain selection**, which is suitable for use with materials and physics defined in domains. For use with a boundary condition, for example, choose **Boundary selection**. These selections do not appear as separate selection nodes in the model tree. Select **Off** to not make any selection available outside of the geometry sequence. From the **Color** list, choose a color for highlighting the resulting objects selection. See Selection Colors.

Cumulative Selection

If you want to make the resulting entities contribute to a cumulative selection, select a cumulative selection from the **Contribute to** list (the default, **None**, gives no contribution), or click the **New** button to create a new cumulative selection (see Cumulative Selections).

LOCATION IN USER INTERFACE

To create copies of geometry objects, in the **Geometry** toolbar **Transforms** ( ) menu, select **Copy** ( ). You can also right-click the **Geometry** node to add this node from the **Transforms** submenu.

	To copy geometry features, you can also right-click the geometry feature in the model tree (for example, **Rectangle** or **Sphere**) and select **Copy** ( ). Then right-click the **Geometry** node and select **Paste** (for example, **Paste Rectangle** or **Paste Sphere**) ( ). It is also possible to copy and duplicate nodes corresponding to operation features such as the Union node.

	• Copying, Pasting, and Duplicating Nodes • Copying and Pasting Geometry Objects

Cross Section

In a **Work Plane** node's **Plane Geometry** sequence you can add a **Cross Section** node ( ). By default, this computes the cross section of all 3D objects generated by preceding nodes in the geometry sequence. You can also select specific 3D objects to intersect with the work plane. You can also add a new 2D or 2D axisymmetric **Component** and add the **Cross Section** node there. In that case, you can select which **Work Plane** to use. For example, if you have a 3D geometry that is symmetric about an axis, you can add a work plane that contains the axis. In the axisymmetric 2D Component, you then get the cross section and can use a 2D axisymmetric component, which is computationally efficient compared to a full 3D component. A **Cross Section** node can also be useful to extract a planar surface for modeling a thin flat 3D structure using shell elements, for example. Another use for a cross section is to form a surface that you can extrude into a 3D solid from a closed curve that lie in a plane. Then also add a **Convert to Solid** node below the **Cross Section** node to make the closed curve into a 2D surface.

To add a cross section, right-click a **Plane Geometry** node under a **Work Plane** node or a 2D **Geometry** node and select **Cross Section** ( ). Then enter the properties of the cross section using the following sections:

CROSS SECTION

If you add the **Cross Section** node to a 2D or 2D axisymmetric geometry, first select the work plane to use for the cross section from the **Work plane** list.

From the **Intersect** list, choose **All objects** (the default) to intersect all 3D geometry objects with the work plane, or choose **Selected objects** to intersect only the geometry objects that you add to the **Objects to intersect** list that appears. Click the **Active** button to toggle between turning ON and OFF the **Objects to intersect** selections.

You can change the settings for the **Repair tolerance** list if you experience problems with the cross section operation. Geometric entities that have a distance less than the repair tolerance are merged.

- The default value in the **Repair tolerance** list is **Automatic**, which for 3D objects represented using the CAD kernel determines the repair tolerance internally. For 3D objects represented using the COMSOL kernel, and for 2D and 1D objects, **Automatic** means a relative repair tolerance of 10^{-6}.
- Choose **Relative** to enter a value for the **Relative repair tolerance** field (the default is determined by the main **Geometry** node's setting). This value is relative to the largest absolute value of the coordinates of all input objects.
- Choose **Absolute** to enter a value for the **Absolute repair tolerance** field (the default is determined by the main **Geometry** node's setting; SI unit: m). This value uses the same unit as the geometry sequence's length unit.

When you build this feature, the relative and absolute repair tolerances are set to the values that are used (with a precision of two digits), which can be useful when you have set **Repair tolerance** to **Automatic**.

SELECTIONS OF RESULTING ENTITIES

Select the **Resulting objects selection** check box to create predefined selections (for all levels — objects, domains, boundaries, edges, and points — that are applicable) in subsequent nodes in the geometry sequence. Use the **Show in 3D** list (for **Cross Section** nodes in a **Work Plane** node's **Plane Geometry**) or the **Show in physics** list (or **Cross Section** nodes in 2D or 2D axisymmetric geometries) to choose for which geometric entity level the selection should be created. All applicable levels, as well as **All levels** and **Off**, are available. From the **Color** list, choose a color for highlighting the resulting objects selection. See Selection Colors.

Select the **Selections from 3D** check box to create selections in 2D based on the selections from the 3D geometry. Each selection that is produced by a 3D geometry feature preceding the work plane in the 3D geometry sequence and each 3D cumulative selection are intersected with the work plane to give a selection in 2D. These selections are available if the **Cross Section** node under a Plane Geometry node in a work plane or under a 2D component's **Geometry** node. In the latter case, you can also select the **Show in physics** check box to make the selections from 3D available in physics and materials settings, for example.

Cumulative Selection

If you want to make the resulting entities contribute to a cumulative selection, select a cumulative selection from the **Contribute to** list (the default, **None**, gives no contribution), or click the **New** button to create a new cumulative selection (see Cumulative Selections).

Deformed Configuration

To create a geometry from a (deformed) mesh:

- In the **Results** toolbar, select **Attributes>Remesh Deformed Configuration** ( )
- Under **Results>Datasets**, right-click a **Solution** dataset and select **Remesh Deformed Configuration** ( ).

The new geometry is added under **Meshes** as a **Deformed Configuration** node ( ). In the **Settings** window of this node, the **Time** or **Parameter value** list controls which solution is used to generate the deformed configuration. If you change the time or parameter value, or if the solution itself has changed, update the deformed configuration by clicking the **Update** button. The meshes that belong to the deformed configuration appear as child nodes under

the deformed configuration node. Thus, to remesh the deformed configuration, right-click such a mesh node and select **Build All**.

- Remeshing a Deformed Mesh
- Solution (dataset)

Delete Entities

To delete geometry objects or geometric entities from objects, right-click a geometry and select **Delete Entities** ( ). Then enter the properties of the delete operation in the **Input** section. If you delete objects corresponding to primitive features these nodes disappear from the sequence. If you delete other objects or if you delete geometric entities a Delete Entities node appears in the sequence.

If you want to delete all objects created by a feature, it is better to right-click the feature, and select **Delete** ( ) or **Disable** ( ).

ENTITIES OR OBJECTS TO DELETE

From the **Geometric entity level** list, choose the level of the entities to delete: **Object**, **Domain**, **Boundary** (that is, faces in 3D and edges in 2D), **Edge** (3D only), or **Point**. Then select the objects or entities that you want to delete in the **Graphics** window or use the **Selection List** window. The objects appear in the **Selection** list when you have confirmed (locked) the selection in the **Graphics** window. If the geometry sequence includes user-defined selections above the **Delete Entities** node, choose **Manual** to select objects or entities, or choose one of the selection nodes from the list next to **Selection**.

SELECTIONS OF RESULTING ENTITIES

Select the **Resulting objects selection** check box to create predefined selections (for all levels — objects, domains, boundaries, edges, and points — that are applicable) in subsequent nodes in the geometry sequence. To also make all or one of the types of resulting entities (domains, boundaries, edges, and points) that the resulting objects consist of available as selections in all applicable selection lists (in physics and materials settings, for example), choose an option from the **Show in physics** (**Show in instances** if in a geometry part; **Show in 3D** in a plane geometry under a work plane in a 3D component) list: **All levels**, **Domain selection**, **Boundary selection**, **Edge selection**, or **Point selection**. The default is **Domain selection**, which is suitable for use with materials and physics defined in domains. For use with a boundary condition, for example, choose **Boundary selection**. These selections do not appear as separate selection nodes in the model tree. Select **Off** to not make any selection available outside of the geometry sequence. From the **Color** list, choose a color for highlighting the resulting objects selection. See Selection Colors.

Cumulative Selection

If you want to make the resulting entities contribute to a cumulative selection, select a cumulative selection from the **Contribute to** list (the default, **None**, gives no contribution), or click the **New** button to create a new cumulative selection (see Cumulative Selections).

Difference

To subtract geometry objects from other geometry objects to make a set difference, in the **Geometry** toolbar, from the **Boolean and Partitions** ( ) menu, select **Difference** ( ). You can also right-click the **Geometry** node to add this node from the **Boolean and Partitions** submenu. Then enter the properties of the difference operation using the following section:

DIFFERENCE

Activate the **Objects to add** list by clicking the **Active** button to toggle between turning ON and OFF selections. When set to ON, select the objects that you want to add in the **Graphics** window. If the geometry sequence includes user-defined selections above the **Difference** node, choose **Manual** to select objects, or choose one of the selection nodes from the list next to **Objects to add**.

Activate the **Objects to subtract** list by clicking the **Active** button to toggle ON and OFF. When set to ON, select the objects that you want to subtract in the **Graphics** window. If the geometry sequence includes user-defined selections above the **Difference** node, choose **Manual** to select objects, or choose one of the selection nodes from the list next to **Objects to subtract**.

Click the **Swap Objects to Add and Objects to Subtract** button ( ) to swap the objects in the two lists.

Select the **Keep input objects** check box to use the selected geometry objects for further geometry operations.

Create a geometry object without interior boundaries by clearing the **Keep interior boundaries** check box. This can be useful to simplify a geometry where the interior boundaries do not separate domains with different physics nodes or materials, for example.

You can change the settings for the **Repair tolerance** list if you experience problems with the difference operation. Geometric entities that have a distance less than the repair tolerance are merged.

- The default value in the **Repair tolerance** list is **Automatic**, which for 3D objects represented using the CAD kernel determines the repair tolerance internally. For 3D objects represented using the COMSOL kernel, and for 2D and 1D objects, **Automatic** means a relative repair tolerance of 10^{-6}.
- Choose **Relative** to enter a value for the **Relative repair tolerance** field (the default is determined by the main **Geometry** node's setting). This value is relative to the largest absolute value of the coordinates of all input objects.
- Choose **Absolute** to enter a value for the **Absolute repair tolerance** field (the default is determined by the main **Geometry** node's setting; SI unit: m). This value uses the same unit as the geometry sequence's length unit.

When you build this feature, the relative and absolute repair tolerances are set to the values that are used (with a precision of two digits), which can be useful when you have set **Repair tolerance** to **Automatic**.

SELECTIONS OF RESULTING ENTITIES

Select the **Resulting objects selection** check box to create predefined selections (for all levels — objects, domains, boundaries, edges, and points — that are applicable) in subsequent nodes in the geometry sequence. To also make all or one of the types of resulting entities (domains, boundaries, edges, and points) that the resulting objects consist of available as selections in all applicable selection lists (in physics and materials settings, for example), choose an option from the **Show in physics** (**Show in instances** if in a geometry part; **Show in 3D** in a plane geometry under a work plane in a 3D component) list: **All levels**, **Domain selection**, **Boundary selection**, **Edge selection**, or **Point selection**. The default is **Domain selection**, which is suitable for use with materials and physics defined in domains. For use with a boundary condition, for example, choose **Boundary selection**. These selections do not appear as separate selection nodes in the model tree. Select **Off** to not make any selection available outside of the geometry sequence. From the **Color** list, choose a color for highlighting the resulting objects selection. See Selection Colors.

Cumulative Selection

If you want to make the resulting entities contribute to a cumulative selection, select a cumulative selection from the **Contribute to** list (the default, **None**, gives no contribution), or click the **New** button to create a new cumulative selection (see Cumulative Selections).

Edit Object

Use the **Edit Object** ( ) feature to adjust the edges and vertices for a 2D geometry object or to add or delete edges and vertices in the object. To edit a 2D object using the **Settings** window, in the Model Builder, right-click the

Geometry node and select **Edit Object** from the context menu. To edit a 2D object using the Graphics window, select the object and click the **Edit Object** button. See Editing 2D Geometry Objects.

SELECT OBJECT

Select the **Input object** to edit in the **Graphics** window (any applicable geometry object or selection). When selected, a copy is made of the input object, and changes then operate on this copy. Changes made in the **Input object** after the copy has been made has no effect on the **Edit Object** feature. For this reason, it is not possible to change the **Input object** after it has been selected.

Click the **Active** button to toggle between turning ON and OFF the **Input object** selections.

EDIT EDGES

Click the **Active** button to toggle between turning ON and OFF the **Edge** selections.

In the **Graphics** window, select and add the **Edge** to edit (or use The Selection List Window). The parameters for the current edge are displayed in the table for **x (m)**, **y (m)**, (**xw (m)**, **yw (m)** in work planes) — where the **m** in parentheses indicates the current geometry length unit; in this case the default unit: meter — and **Weights**, and under the table for the **Degree** list and the **Start vertex** and **End vertex** fields.

If required, click **New** to create a new edge. The new edge is linear, not connected to any other edges or vertices, and has both the start and the end coordinates set to 0. Click **Delete** to delete the current edge. Deleting an edge also deletes its adjacent vertices, if these vertices are not connected to other edges.

Click in the table cells to edit the **x (m)**, **y (m)**, (**xw (m)**, **yw (m)** in work planes) and **Weights** and modify the control points of the edge. If the **x** or **y** value for the first or last control point is modified, any adjacent edges and vertices are automatically updated with the same value.

Select the **Degree** — **Linear**, **Quadratic**, or **Cubic** — to change the degree of the edge. When decreasing the degree, the control points are recalculated so as to approximate the old shape of the edge.

Under **Start vertex**, click the **Active** button to move the starting point of the edge to a different vertex. In the **Graphics** window, select and add the **Edge**. Under **End vertex**, click the **Active** button to move the endpoint of the edge to a different vertex. In the **Graphics** window, select and add the **Edge**. If required, click **Disconnect** to disconnect the start or end vertex of an edge from the rest of the object. A new vertex is created with coordinates matching the start or endpoint of the edge. This vertex can be moved without affecting the other edges that were previously connected to this edge.

When the **Edit Object** node is the current node, you can visualize the edited object by observing the edge or vertex numbers displayed in the **Graphics** window next to the edges or vertices.

EDIT VERTICES

Click the **Active** button to toggle between turning ON and OFF the **Vertex** selections.

In the **Graphics** window, select and add the **Vertex** (node) to edit (or use The Selection List Window). The parameters for the current vertex are displayed in the **x** and **y** fields under **Coordinates**, and the vertex is highlighted in the **Graphics** window.

- Click **New** to create a new vertex; the coordinates for the new vertex are set to 0.
- Click **Delete** to delete the current vertex. Only isolated vertices can be deleted. For other vertices, the **Delete** button is disabled.
- Click **Snap to Closest** to delete the current vertex. Any edges connected to the deleted vertex are modified so that the start or endpoint is moved to the closest remaining vertex.

Under **Coordinates** edit the **x** and **y** fields as needed.

SELECTIONS OF RESULTING ENTITIES

Select the **Resulting objects selection** check box to create predefined selections (for all levels — objects, domains, boundaries, edges, and points — that are applicable) in subsequent nodes in the geometry sequence. To also make all or one of the types of resulting entities (domains, boundaries, edges, and points) that the resulting objects consist of available as selections in all applicable selection lists (in physics and materials settings, for example), choose an option from the **Show in physics** (**Show in instances** if in a geometry part; **Show in 3D** in a plane geometry under a work plane in a 3D component) list: **All levels**, **Domain selection**, **Boundary selection**, or **Point selection**. The default is **Domain selection**, which is suitable for use with materials and physics defined in domains. For use with a boundary condition, for example, choose **Boundary selection**. These selections do not appear as separate selection nodes in the model tree. Select **Off** to not make any selection available outside of the geometry sequence. From the **Color** list, choose a color for highlighting the resulting objects selection. See Selection Colors.

Cumulative Selection

If you want to make the resulting entities contribute to a cumulative selection, select a cumulative selection from the **Contribute to** list (the default, **None**, gives no contribution), or click the **New** button to create a new cumulative selection (see Cumulative Selections).

Editing 2D Geometry Objects

Extrude

To extrude planar objects into 3D objects, in the **Geometry** toolbar, click **Extrude** ( ). You can also right-click the **Geometry** or a **Work Plane** feature to add this from the context menu. Then enter the properties of the extrude operation.

GENERAL

From the **Extrude from** list, select **Faces** to extrude planar faces from the 3D geometry. Select the faces that you want to extrude in the Graphics window. They appear in the **Input faces** list. All selected faces must lie in the same plane. Alternatively, from the **Extrude from** list, select **Work plane** to extrude objects from a work plane. In the **Work plane** list, select the work plane to extrude from. Select the objects that you want to extrude in the Graphics window. They appear in the **Input objects** list.

From the **Input object handling** list, select one of the following options:

- **Unite with** (the default), to unite the input objects with the extruded objects.
- **Keep**, to keep the extruded objects separate from the input objects.
- **Remove**, to avoid that the input faces appear in the **Form Union** operation. This option is useful if you extrude in both directions and have cleared the **Include input faces** check box in the **Distances** section below.

Click the **Active** button to toggle between turning ON and OFF the **Input objects** selections.

DISTANCES

From the **Specify** list, choose **Distances from plane** (the default) or **Vertices to extrude to**.

For **Distances from plane**, specify one or several distances (positive or negative) in the table. These determine the height above or below the work plane or planar faces for the top of each layer. The **Reverse direction** check box reverses the direction of the extrusion. To achieve a symmetric extrusion for a total thickness th, enter two distances: th/2 and –th/2.

For **Vertices to extrude to**, select vertices to extrude the planar objects to from the list or by selecting them in the Graphics window.

Select the **Include input faces** check box (selected by default) to also include a face of the extruded objects at their input location (the work plane). If you clear this check box, you do not get a face at the work plane, so the number of distances from the plane must be at least 2. Likewise, if you extrude to a single vertex, you need to include the input faces as a second end face for the extruded objects.

If you extrude several layers, remove the interior boundaries by clearing the **Keep cross-sectional faces** check box.

The direction arrow that appears in the Graphics window indicates the length of each extrusion distance.

SCALES

For each layer, specify a length scaling factor for the top of the layer relative to the work plane object or planar faces.

DISPLACEMENTS

For each layer, specify a displacement vector for the top of the layer in the work plane's coordinate system, or the local coordinate system defined by the first face to extrude. The first face is the face with smallest face number in the geometry object that comes first in the geometry sequence.

TWIST ANGLES

For each layer, specify a rotation angle for the top of the layer around the work plane's normal vector or the normal vector of the first face to extrude. The first face is the face with smallest face number in the geometry object that comes first in the geometry sequence.

SELECTIONS OF RESULTING ENTITIES

Select the **Resulting objects selection** check box to create predefined selections (for all levels — objects, domains, boundaries, edges, and points — that are applicable) in subsequent nodes in the geometry sequence. To also make all or one of the types of resulting entities (domains, boundaries, edges, and points) that the resulting objects consist of available as selections in all applicable selection lists (in physics and materials settings, for example), choose an option from the **Show in physics** (**Show in instances** if in a geometry part) list: **All levels**, **Domain selection**, **Boundary selection**, **Edge selection**, or **Point selection**. The default is **Domain selection**, which is suitable for use with materials and physics defined in domains. For use with a boundary condition, for example, choose **Boundary selection**. These selections do not appear as separate selection nodes in the model tree. Select **Off** to not make any selection available outside of the geometry sequence. From the **Color** list, choose a color for highlighting the resulting objects selection. See Selection Colors.

Cumulative Selection

If you want to make the resulting entities contribute to a cumulative selection, select a cumulative selection from the **Contribute to** list (the default, **None**, gives no contribution), or click the **New** button to create a new cumulative selection (see Cumulative Selections).

Fillet

To fillet (round) corners in 2D geometry objects, in the **Geometry** toolbar, click **Fillet** ( ). You can also right-click the **Geometry** node and add this node from the context menu. Then enter the properties of the fillet operation using the following sections:

POINTS

Select the points (vertices) that you want to fillet in the **Graphics** window. They then appear in the **Vertices to fillet** list. If the geometry sequence includes user-defined selections above the **Fillet** node, choose **Manual** to select points, or choose one of the selection nodes from the list next to **Vertices to fillet**.

Click the **Active** button to toggle between turning ON and OFF the **Vertices to fillet** selections.

RADIUS

Enter the **Radius** of the circular fillet arc.

SELECTIONS OF RESULTING ENTITIES

Select the **Resulting objects selection** check box to create predefined selections (for all levels — objects, domains, boundaries, edges, and points — that are applicable) in subsequent nodes in the geometry sequence. To also make all or one of the types of resulting entities (domains, boundaries, edges, and points) that the resulting objects consist of available as selections in all applicable selection lists (in physics and materials settings, for example), choose an option from the **Show in physics** (**Show in instances** if in a geometry part; **Show in 3D** in a plane geometry under a work plane in a 3D component) list: **All levels**, **Domain selection**, **Boundary selection**, or **Point selection**. The default is **Domain selection**, which is suitable for use with materials and physics defined in domains. For use with a boundary condition, for example, choose **Boundary selection**. These selections do not appear as separate selection nodes in the model tree. Select **Off** to not make any selection available outside of the geometry sequence. From the **Color** list, choose a color for highlighting the resulting objects selection. See Selection Colors.

Cumulative Selection

If you want to make the resulting entities contribute to a cumulative selection, select a cumulative selection from the **Contribute to** list (the default, **None**, gives no contribution), or click the **New** button to create a new cumulative selection (see Cumulative Selections).

	The Design Module supports fillets in 3D geometries.

If, Else If, Else, End If

To construct an If statement, in the **Geometry** toolbar, from the **Programming** menu, select **If + End If** (you can also do this by right-clicking the **Geometry** node in the model tree and opening the **Programming** submenu). This adds an **If** node ( ) and an **End If** node ( ) after the current node. You can optionally add **Else If** ( ) nodes and an **Else** node ( ) in a similar way. To add these nodes at an arbitrary position in a geometry sequence, you can right-click a geometry feature node and select **If**, **Else If**, **Else**, or **End If** on the **Add Before** or **Add After** submenu. This adds the selected type of programming feature before or after the selected node, without building the preceding feature node.

An If statement has the following structure:

```
If
  <branch1>
Else If
  <branch2>
Else If
  <branch3>
...
Else
  <last branch>
End If
```

where the **Else If** and **Else** nodes are optional. There can be an arbitrary number of geometry features in each branch, and there can be an arbitrary number of **Else If** nodes. The **Else** node must appear after all **Else If** nodes and before the **End If** node.

	The *Thermal Microactuator Simplified* model in the Multiphysics section of the COMSOL Multiphysics Application Library uses If and End If nodes in its geometry sequence to consider different geometry cases. If you have the CFD Module, the *Mixer* application's geometry sequence shows the use of If, Else If, and End If.

IF AND ELSE IF

The **Settings** windows for **If** and **Else If** have a **Condition** field, which contains a logical condition in terms of parameters (for example, `a+b>0`, where `a` and `b` are defined as parameters for the geometry sequence). In general, the condition is true if it evaluates to a nonzero value. When building the geometry sequence, the program builds the features in the first branch that has a true condition and treats the other branches as disabled. If none of the conditions are true, the program builds the **Else** branch.

If you select a feature in a branch and click **Build Selected**, the software pretends that the chosen branch has a true condition and that all other branches have false conditions. You can use this behavior to try out the different branches without having to change the parameters. If statements can be nested.

To define selections that have different definitions in different branches of an If statement, you can use cumulative selections (see Cumulative Selections).

Import

To import geometry objects from a file or from another geometry, in the **Geometry** toolbar, click **Import** ( ). You can also right-click the **Geometry** node to add this node from the context menu. Then enter the properties of the import feature in the **Import** section of the **Settings** window for the **Import** node.

IMPORT

In the **Source** list choose the type of data to import: **Any importable file** and **COMSOL Multiphysics file** are always available. If there is another geometry sequence of the same dimension in the model, the type **Geometry sequence** is available. In addition, you can choose **Mesh** in 1D; **DXF file** and **Mesh** in 2D; and **Mesh or 3D printing file (STL, 3MF, PLY)** in 3D. When choosing **Mesh** or **Mesh or 3D printing file (STL, 3MF, PLY)**, you can import the geometry defined by a mesh of any meshing sequence, of the same space dimension, or a mesh file in the COMSOL Multiphysics format. In 3D, it is also possible to import a mesh defined by an STL, 3MF, or PLY file as a geometry. These files, which represent 3D surface meshes and are often used for 3D printing and additive manufacturing, can be used as a basis for creating a volumetric mesh for a single geometry domain. In addition, files with a NASTRAN, VRML (3D only), or sectionwise format are supported.

!	Importing a COMSOL Multiphysics geometry file that contains a geometry created using the CAD kernel requires the CAD Import Module,

In 2D and 3D (but not in work planes, where virtual operations are always excluded), when **COMSOL Multiphysics file** is selected from the **Source** list, the **Include result from virtual operations** check box is selected by default. Clear that check box if you want to exclude the virtual operations in the file when importing it into another geometry.

	If you have license for the CAD Import Module, you also have **3D CAD file** in 3D (see the *CAD Import Module User's Guide* for more information about supported CAD file formats). You need to use the CAD kernel for the geometry representation, which you can specify in the **Preferences** dialog box and in the **Settings** window for **Geometry**.

	The alternative import format **ECAD file** is available in 2D and 3D with a license for the ECAD Import Module. See the *ECAD Import Module User's Guide* or go to http://www.comsol.com/ecad-import-module/ for more information.

In all cases, you need to specify the geometry sequence, mesh, or file to import. Then click **Import** to bring in the geometry or mesh to use as a part of the geometry in the geometry sequence.

For the **Any importable file** and **COMSOL Multiphysics file** source types (and the 3D CAD and ECAD file source types), specify the filename in the **Filename** field or click the **Browse** button.

For import from another geometry sequence, select the geometry sequence or meshing sequence from the **Geometry** list below.

For import of a mesh, choose one of the available meshing sequences (from other model components of the same dimension) or mesh parts from the **Mesh** list. Use the **Go to Source** button ( ) to move focus to the meshing sequence or mesh part that you selected. If you choose **None**, you can click **Browse** to locate a mesh or STL file or specify it in the **Filename** field. If you import an STL or NASTRAN file, for example, clicking **Import** also creates a **Mesh Part** node of the same dimension as the geometry component with an **Import** subnode under **Global Definitions** to make it easy to reuse the imported mesh as a geometry part. See Import for additional settings that you can make for the import in the mesh part and Using Mesh Parts for more information about mesh parts.

For DXF, mesh and 3D printing file formats, and 3D CAD import, you can change a number of properties when you have selected the file type. To import the file, click the **Import** button ( ). If you have changed some property, the software automatically re-imports the file when you click a build button. If you have changed the source file, you need to explicitly click the **Import** button to read the modified file.

Properties for Mesh or 3D Printing File (STL, 3MF, PLY) Import

When you have selected a mesh or 3D printing file, you can optionally simplify the mesh before creating the geometry. The simplification can remove small defects typically present in mesh data from measurements, such as tomography, and it can speed up geometry processing by removing unnecessary elements from all kind of meshes. Select the **Simplify mesh** check box to enable simplification.

The **Relative simplification tolerance** is relative to the dimensions of the entire geometry and specifies a global limit for how much the mesh can be modified. The **Defect removal factor** is relative to the local feature size, as estimated by the algorithm, and is combined with the global limit to produce a limit for how much the mesh can be modified at a certain location. If the mesh contains many defects that you want to remove, you could try to increase the value of the **Defect removal factor**. If the mesh describes the desired geometry with high accuracy, you may want to decrease this factor instead.

The **Form solids from surface objects** check box is selected by default to create solid geometry objects from surface mesh objects from, for example, an STL file. If you do not want or need solid geometry objects, clear this check box.

Properties for DXF Import

The repair tolerance specifies the largest distance between the endpoints of curves allowed in the imported geometry. You can specify this tolerance as an import option.

In the **Layer selection** list, select the layers to import.

Under **Import options**, select **Form solids** to unite and convert all objects in each layer to a solid object, select **Knit curves** to unite and convert all objects in each layer to a curve object, or select **Do not knit** to do nothing.

If the **Repair imported objects** check box is selected, enter a **Relative repair tolerance**. To create a geometry for mesh generation and finite element analysis, COMSOL Multiphysics requires a high degree of accuracy within the CAD drawing. Sometimes DXF geometries contain small gaps and exceedingly short edges that make it impossible to create a valid 2D solid or a valid mesh. COMSOL Multiphysics provides repair tolerance settings to remove short edges and close small gaps during DXF file import. The absolute repair tolerance is the relative repair tolerance times the maximum coordinate of the imported objects (the default value is 10^{-5}). Geometric entities that have a distance less than the absolute repair tolerance are merged.

SELECTIONS OF RESULTING ENTITIES

Select the **Resulting objects selection** check box to create predefined selections (for all levels — objects, domains, boundaries, edges, and points — that are applicable) in subsequent nodes in the geometry sequence. To also make all or one of the types of resulting entities (domains, boundaries, edges, and points) that the objects consist of available as selections in all applicable selection lists (in physics and materials settings, for example), choose an option from the **Show in physics** (**Show in instances** if in a geometry part; **Show in 3D** in a plane geometry under a work plane in a 3D component) list: **All levels**, **Domain selection**, **Boundary selection**, **Edge selection**, or **Point selection**. The default is **Domain selection**, which is suitable for use with materials and physics defined in domains. For use with a boundary condition, for example, choose **Boundary selection**. These selections do not appear as separate selection nodes in the model tree. Select **Off** to not make any selection available outside of the geometry sequence. From the **Color** list, choose a color for highlighting the resulting objects selection. See Selection Colors.

Select the **Individual objects selections** check box to create predefined selections (for all levels — objects, domains, boundaries, edges, and points — that are applicable) in subsequent nodes in the geometry sequence for each individual object in the geometry file and for each relevant entity level. To also make all or one of the types of resulting entities (domains, boundaries, edges, and points) that the objects consist of available as selections in all applicable selection lists (in physics and materials settings, for example), choose an option from the **Show in physics** (**Show in instances** if in a geometry part) list: **All levels**, **Domain selection**, **Boundary selection**, **Edge selection**, or **Point selection**. The default is **Domain selection**, if available, which is suitable for use with materials and physics defined in domains. For use with a boundary condition, for example, choose **Boundary selection**. These selections do not appear as separate selection nodes in the model tree. Select **Off** to not make any selection available outside of the geometry sequence.

Cumulative Selection

If you want to make the resulting entities contribute to a cumulative selection, select a cumulative selection from the **Contribute to** list (the default, **None**, gives no contribution), or click the **New** button to create a new cumulative selection (see Cumulative Selections).

	See the *ECAD Import Module User's Guide* or go to http://www.comsol.com/ecad-import-module/ for more information about selection settings for import of ECAD files.

	Eigenmodes of a Room: Application Library path **COMSOL_Multiphysics/Acoustics/eigenmodes_of_room**

Intersection

To create the intersection of geometry objects, in the **Geometry** toolbar, from the **Boolean and Partitions** ( ) menu, select **Intersection** ( ). You can also right-click the **Geometry** node to add this node from the **Boolean and Partitions** submenu. Then enter the properties of the intersection operation using the following section:

INTERSECTION

Select the geometry objects that you want to intersect in the **Graphics** window. The objects appear in the **Input objects** list. If the geometry sequence includes user-defined selections above the **Intersection** node, choose **Manual** to select geometry objects, or choose one of the selection nodes from the list next to **Input objects**.

Click the **Active** button to toggle between turning ON and OFF the **Input objects** selections.

Select the **Keep input objects** check box to use the selected geometry objects for further geometry operations.

To create a geometry object without interior boundaries, clear the **Keep interior boundaries** check box. This can be useful to simplify a geometry where the interior boundaries do not separate domains with different physics nodes or materials, for example.

You can change the settings for the **Repair tolerance** list if you experience problems with the intersection operation. Geometric entities that have a distance less than the repair tolerance are merged.

- The default value in the **Repair tolerance** list is **Automatic**, which for 3D objects represented using the CAD kernel determines the repair tolerance internally. For 3D objects represented using the COMSOL kernel, and for 2D and 1D objects, **Automatic** means a relative repair tolerance of 10^{-6}.
- Choose **Relative** to enter a value for the **Relative repair tolerance** field (the default is determined by the main **Geometry** node's setting). This value is relative to the largest absolute value of the coordinates of all input objects.
- Choose **Absolute** to enter a value for the **Absolute repair tolerance** field (the default is determined by the main **Geometry** node's setting; SI unit: m). This value uses the same unit as the geometry sequence's length unit.

When you build this feature, the relative and absolute repair tolerances are set to the values that are used (with a precision of two digits), which can be useful when you have set **Repair tolerance** to **Automatic**.

SELECTIONS OF RESULTING ENTITIES

Select the **Resulting objects selection** check box to create predefined selections (for all levels — objects, domains, boundaries, edges, and points — that are applicable) in subsequent nodes in the geometry sequence. To also make all or one of the types of resulting entities (domains, boundaries, edges, and points) that the resulting objects consist of available as selections in all applicable selection lists (in physics and materials settings, for example), choose an option from the **Show in physics** (**Show in instances** if in a geometry part; **Show in 3D** in a plane geometry under a work plane in a 3D component) list: **All levels**, **Domain selection**, **Boundary selection**, **Edge selection**, or **Point selection**. The default is **Domain selection**, which is suitable for use with materials and physics defined in domains. For use with a boundary condition, for example, choose **Boundary selection**. These selections do not appear as separate selection nodes in the model tree. Select **Off** to not make any selection available outside of the geometry sequence. From the **Color** list, choose a color for highlighting the resulting objects selection. See Selection Colors.

Cumulative Selection

If you want to make the resulting entities contribute to a cumulative selection, select a cumulative selection from the **Contribute to** list (the default, **None**, gives no contribution), or click the **New** button to create a new cumulative selection (see Cumulative Selections).

Mirror

To mirror (reflect) geometry objects in a plane (3D), a line (2D), or a point (1D), in the **Geometry** toolbar, from the **Transforms** ( ) menu, select **Mirror** ( ). You can also right-click the **Geometry** node to add this node from the **Transforms** submenu. Then enter the properties of the mirror operation using the following sections:

INPUT

Select the geometry objects that you want to reflect in the **Graphics** window. The objects appear in the **Input objects** list. If the geometry sequence includes user-defined selections above the **Mirror** node, choose **Manual** to select geometry objects, or choose one of the selection nodes from the list next to **Input objects**.

Click the **Active** button to toggle between turning ON and OFF the **Input objects** selections.

Select the **Keep input objects** check box to use the selected geometry objects for further geometry operations.

POINT ON PLANE/LINE OF REFLECTION

	Specify a point to be fixed during reflection by entering **x**, **y**, and **z**.

NORMAL VECTOR TO PLANE/LINE OF REFLECTION

	Specify a vector in the direction to reflect by entering **x**, **y**, and **z**.

POINT OF REFLECTION

—	For a 1D model, specify the coordinate of the point of reflection in the **x** field.

COORDINATE SYSTEM

The coordinate system in which the plane coordinates and normal vector above are interpreted (in 3D geometries only). From the **Work plane** list, select **xy-plane** (the default, for a standard global Cartesian coordinate system) or select any work plane defined above this node in the geometry sequence. If you choose a work plane, the work plane and its coordinate system appears in the Graphics window, using an extra coordinate triad with the directions **xw**, **yw**, and **zw** (which are then used to specify the mirror operation).

SELECTIONS OF RESULTING ENTITIES

Select the **Resulting objects selection** check box to create predefined selections (for all levels — objects, domains, boundaries, edges, and points — that are applicable) in subsequent nodes in the geometry sequence. To also make all or one of the types of resulting entities (domains, boundaries, edges, and points) that the resulting objects consist of available as selections in all applicable selection lists (in physics and materials settings, for example), choose an option from the **Show in physics** (**Show in instances** if in a geometry part; **Show in 3D** in a plane geometry under a work plane in a 3D component) list: **All levels**, **Domain selection**, **Boundary selection**, **Edge selection**, or **Point selection**. The default is **Domain selection**, which is suitable for use with materials and physics defined in domains. For use with

a boundary condition, for example, choose **Boundary selection**. These selections do not appear as separate selection nodes in the model tree. Select **Off** to not make any selection available outside of the geometry sequence. From the **Color** list, choose a color for highlighting the resulting objects selection. See Selection Colors.

Cumulative Selection

If you want to make the resulting entities contribute to a cumulative selection, select a cumulative selection from the **Contribute to** list (the default, **None**, gives no contribution), or click the **New** button to create a new cumulative selection (see Cumulative Selections).

Move

To move (translate) geometry objects, in the **Geometry** toolbar, from the **Transforms** ( ) menu, select **Move** ( ). You can also right-click the **Geometry** node to add this node from the **Transforms** submenu. Then enter the properties of the move operation using the following sections:

INPUT

Select the geometry objects that you want to move in the **Graphics** window. The objects appear in the **Input objects** list. If the geometry sequence includes user-defined selections above the **Move** node, choose **Manual** to select geometry objects, or choose one of the selection nodes from the list next to **Input objects**.

Click the **Active** button to toggle between turning ON and OFF the **Input objects** selections.

Select the **Keep input objects** check box to use the selected geometry objects for further geometry operations.

DISPLACEMENT

From the **Specify** list, choose **Displacement vector** (the default) or **Positions**.

If you choose **Displacement vector**, specify the displacement in each direction by entering **x**, **y**, and **z** (not all fields are available in 1D and 2D geometries); **r** and **z** in 2D axial symmetry; **xw** and **yw** in work planes. To create several identical objects moved using different displacements, enter a comma-separated or space-separated list of displacements in these fields, or click the **Range** button ( ) to use the **Range** dialog box for specifying a range of displacements for moving multiple copies.

If you choose **Positions**, choose **Vertex** (the default) or **Coordinates** from the **Old position** list to specify the old (original) position. If you choose **Vertex**, select a vertex from some geometry object in the Graphics window; otherwise, specify the old position using coordinates. Likewise, choose **Vertices** (the default) or **Coordinates** from the **New position** list to specify the new (destination) positions. Defining the move operation using positions can be useful in the following situations:

- To move an object so that a given vertex gets certain coordinates. For example, make the *r*-coordinate exactly 0 in an axisymmetric model.
- To move a geometry object so that a given vertex coincides with a vertex of another geometry object.
- To move a geometry object so that a point with given coordinates (for example, the origin of a sphere) is moved to a vertex of another geometry object.

COORDINATE SYSTEM

The coordinate system in which the displacement coordinates above are interpreted (in 3D geometries only). From the **Work plane** list, select **xy-plane** (the default, for a standard global Cartesian coordinate system) or select any work plane defined above this node in the geometry sequence. If you choose a work plane, the work plane and its coordinate system appears in the Graphics window, using an extra coordinate triad with the directions **xw**, **yw**, and **zw** (which are then used to specify the displacement).

SELECTIONS OF RESULTING ENTITIES

Select the **Resulting objects selection** check box to create predefined selections (for all levels — objects, domains, boundaries, edges, and points — that are applicable) in subsequent nodes in the geometry sequence. To also make all or one of the types of resulting entities (domains, boundaries, edges, and points) that the resulting objects consist of available as selections in all applicable selection lists (in physics and materials settings, for example), choose an option from the **Show in physics** (**Show in instances** if in a geometry part; **Show in 3D** in a plane geometry under a work plane in a 3D component) list: **All levels**, **Domain selection**, **Boundary selection**, **Edge selection**, or **Point selection**. The default is **Domain selection**, which is suitable for use with materials and physics defined in domains. For use with a boundary condition, for example, choose **Boundary selection**. These selections do not appear as separate selection nodes in the model tree. Select **Off** to not make any selection available outside of the geometry sequence. From the **Color** list, choose a color for highlighting the resulting objects selection. See Selection Colors.

Cumulative Selection

If you want to make the resulting entities contribute to a cumulative selection, select a cumulative selection from the **Contribute to** list (the default, **None**, gives no contribution), or click the **New** button to create a new cumulative selection (see Cumulative Selections).

Parameter Check

You can add a **Parameter Check** node ( ) to a geometry part or a geometry sequence to check the values of the input parameters (or local or global parameters). Such a check can be useful to make sure that a parameter value stays within a certain range, especially for input parameters to geometry s used in geometry models. The check gives an error if the condition that you provide is nonzero (true). For example, `r>30[mm]` gives an error if the value of the parameter `r` exceeds 30 mm. Put the node at a position before the use of the parameter if you want the error to appear before using the parameter that you want to check when building a geometry feature. The error appears in an **Error** window and also as an **Error** subnode under the **Parameter Check** node. You enter the condition and error message in the following section:

PARAMETER CHECK

In the **Condition** field, type an expression in terms of the parameters (global, local, and input parameters). When you build the feature, an error occurs if the expression is nonzero.

In the **Error message** field, type an error message to display if the condition for the parameter check is nonzero.

Part Instance

Use a **Part Instance** node to call and instantiate a geometry part in the model component's geometry sequence. The geometry part can be a global part defined under one **Global>Parts** of a locally defined part. To create an instance of a geometry part, right-click a geometry and select one of the global parts from the **Parts** submenu. This adds a **Part Instance** node ( ), which builds an instance of the part with new values of its input parameters (arguments). Enter the properties of the part instance using the following sections:

PART

Choose the part to create an instance of from the **Part** list. You can choose among the parts defined under **Global>Parts**. You can also choose **Local part** (the default if no other parts exist), which means that the part is defined by the **Local Part** node (in 3D) beneath the **Part Instance** node. To choose the part from the Part Libraries, click **Choose from Library**. You can then choose a part and click **Add to Geometry**. The part then also appears under **Global>Parts**.

INPUT PARAMETERS

The **Name** column of the table contains the input parameters required by the part. In the **Expression** column, enter the corresponding expressions. The expressions can contain parameters defined under **Global Definitions**. The defaults are the default expressions defined in the **Input Parameters** section for the part that you create an instance of. The values of the expressions appear in the **Value** column. The **Description** column contains the descriptions given by the part.

You can import or load data in files from a spreadsheet program, for example, with the **Load from file** button ( ) and the **Load from File** dialog box that appears. Data must be separated by spaces or tabs. If the license includes LiveLink™ *for* Excel® you can also load input parameters from a Microsoft Excel Workbook spreadsheet.

POSITION AND ORIENTATION OF OUTPUT

Use this section to specify the translation and rotation to apply to the output objects (not in 1D).

In 3D, this transformation is done in two steps:

- The first step is to transform the output objects so that a chosen coordinate system from the part matches a given coordinate system defined by some feature preceding the Part Instance. Both coordinate systems are defined as the local coordinate system of a work plane. By default, the first step does nothing.
- The second step is to transform the output objects using a displacement and a rotation.

In 2D, only the second step of the transformation is available.

Coordinate system in part

Choose the coordinate system from the part from the **Work plane in part** list. You can choose among all work planes defined in the part. You can also choose **xy-plane**, which corresponds to the global coordinate system (this is the default). The selected work plane becomes the "base plane" for the part instance's position.

Coordinate system to match

To choose the coordinate system to match, first make a choice in the **Take work plane from** list. The default is **This sequence**, which means that you can select a work plane feature from this sequence. You can also choose another **Part Instance** above this one in the geometry sequence, which means that you take the work plane from the other **Part Instance** node. In both cases, you select the work plane to match in the **Work plane** list. The default is **xy-plane**, which corresponds to the global coordinate system. The work plane to match is visualized in the graphics.

Displacement

Enter values or expressions for the **xw**, **yw**, and **zw** coordinates (SI unit: m) to add a displacement vector relative to the coordinate system to match.

Rotation

In 3D, from the **Specify** list, choose **Axis of rotation** (the default) or **Euler angles (Z-X-Z)** as the way to specify the rotation.

- For **Axis of rotation**, select an **Axis type**: **xw-axis**, **yw-axis**, **zw-axis** (the default), **Cartesian**, or **Spherical**. For any choice, enter a **Rotation angle** (SI unit: degrees; default 0) to specify the rotation. If **Cartesian** is selected, enter Cartesian coordinates values for **xw**, **yw**, and **zw** (default values 0, 0, and 1, respectively, corresponding to the global *zw*-axis) to specify the axis vector. If **Spherical** is selected, specify the axis vector using spherical angles **theta** and **phi** in degrees (default: 0).
- For **Euler angles (Z-X-Z)**, enter values for the intrinsic Z-X-Z Euler angles α, β, and γ in the corresponding text fields (in degrees; the default values are 0).

In 2D, you can specify a displacement vector in the **x-displacement** and **y-displacement** fields and a rotation angle (in degrees) in the **Rotation angle** field.

OBJECT SELECTIONS

When you have built the Part Instance feature, the table shows the names of the output object selections that are defined by the part and there set to show in instances of the part. When you click a row in the table, the corresponding selection is highlighted in the graphics. These selections are available for use as input to following geometry features if kept, and also, optionally, available in the physics and materials, for example. You can unite selections from several **Part Instance** nodes using a cumulative selection. If you want a selection to contribute to a cumulative selection, choose that cumulative selection from the corresponding list in the **Contribute to** column. To contribute to a new cumulative selection, click the selection in the table and then the **New Cumulative Selection** button. This opens a dialog box where you can specify the name of the cumulative selection. Select the **Keep** check box to keep the selection for use in other nodes in the geometry sequence below this node.

DOMAIN/BOUNDARY/EDGE/POINT SELECTIONS

These sections are similar to the **Object Selections** section. If the **Keep** check box is selected, the **Physics** (**Instances** when used in another geometry part; **3D** when used in a plane geometry for a work plane) check box, when selected (which it is by default), makes that selection also available when defining, for example, physics and materials (Physics), in the part instances (**Instances**), or in 3D (**3D**).

SELECTION SETTINGS

Select the **Keep noncontributing selections** check box to disable the **Keep** column and keep all selections that do not contribute to a cumulative selection. This setting is the default in the COMSOL API and corresponds to the behavior in earlier COMSOL versions.

Partition Objects

The **Partition Objects** node ( ) provides a way to partition geometry objects as a Boolean operation. Partitioning geometry objects can be useful to create separate domains, to introduce an interior boundary, or to cut of a part of the original geometry that is not needed for the analysis, for example. Using the **Partition Objects** node, you can partition a target object using a set of *tool objects* (geometry objects that are only used to partition — or tool — other geometry objects) or using an (infinite) plane defined by a **Work Plane** node (you do not need to draw anything in the work plane). The output of a **Partition Objects** node's partitioning operation includes the same number of objects as the input to the partitioning. To add it to a model, in the **Geometry** toolbar, from the **Boolean and Partitions** ( ) menu, select **Partition Objects**. You can also right-click the **Geometry** or a **Work Plane>Plane Geometry** node to add this from the **Boolean and Partitions** submenu. Then enter the properties of the partitioning operation using the following sections:

PARTITION OBJECTS

In the **Objects to partition** list, add the geometry objects that you want to apply a partition operation on. Click the **Active** button to toggle between turning ON and OFF the **Objects to partition** selections.

Select the **Keep objects to partition** check box to use the selected geometry objects to partition for further geometry operations.

From the **Partition with** list (3D only; for 2D, only objects can be used), select **Objects** (the default) to partition using the geometry objects that you add to the **Tool objects** list below, or select **Work plane** to partition using any of the added work planes.

- If you select **Objects**, add the geometry objects that you want to use as tool object to the **Tool objects** list. Click the **Active** button to toggle between turning ON and OFF the **Tool objects** selections. Those geometry objects are only used to partition the geometry objects in the **Objects to partition** list and are not included in the finalized

geometry used for defining materials and physics nodes. Select the **Keep tool objects** check box to use the selected tool objects for further geometry operations.

- If you select **Work plane**, select from the available work planes in the **Work plane** list. Click the **Go to Source** button ( ) to move to the **Work Plane** node for the selected work plane.

You can change the settings for the **Repair tolerance** list if you experience problems with the partition operation. Geometric entities that have a distance less than the repair tolerance are merged.

- The default value in the **Repair tolerance** list is **Automatic**, which for 3D objects represented using the CAD kernel determines the repair tolerance internally. For 3D objects represented using the COMSOL kernel, and for 2D and 1D objects, **Automatic** means a relative repair tolerance of 10^{-6}.
- Choose **Relative** to enter a value for the **Relative repair tolerance** field (the default is determined by the main **Geometry** node's setting). This value is relative to the largest absolute value of the coordinates of all input objects.
- Choose **Absolute** to enter a value for the **Absolute repair tolerance** field (the default is determined by the main **Geometry** node's setting; SI unit: m). This value uses the same unit as the geometry sequence's length unit.

When you build this feature, the relative and absolute repair tolerances are set to the values that are used (with a precision of two digits), which can be useful when you have set **Repair tolerance** to **Automatic**.

SELECTIONS OF RESULTING ENTITIES

Select the **Resulting objects selection** check box to create predefined selections (for all levels — objects, domains, boundaries, edges, and points — that are applicable) in subsequent nodes in the geometry sequence. To also make all or one of the types of resulting entities (domains, boundaries, edges, and points) that the resulting objects consist of available as selections in all applicable selection lists (in physics and materials settings, for example), choose an option from the **Show in physics** (**Show in instances** if in a geometry part; **Show in 3D** if in a work plane's plane geometry) list: **All levels**, **Domain selection**, **Boundary selection**, **Edge selection**, or **Point selection**. The default is **Domain selection**, which is suitable for use with materials and physics defined in domains. For use with a boundary condition, for example, choose **Boundary selection**. These selections do not appear as separate selection nodes in the model tree. Select **Off** to not make any selection available outside of the geometry sequence. From the **Color** list, choose a color for highlighting the resulting objects selection. See Selection Colors.

Cumulative Selection

If you want to make the resulting entities contribute to a cumulative selection, select a cumulative selection from the **Contribute to** list (the default, **None**, gives no contribution), or click the **New** button to create a new cumulative selection (see Cumulative Selections).

Partition Domains

The **Partition Domains** node ( ) provides an operation that partitions selected domains at specified locations. You can specify the curves or surfaces for the partitioning in various ways (see the **Partition with** list information under **Partition Domains** below). Partitioning domains can be useful in cases where a structured mesh would be a better choice than an unstructured mesh but the domains are not suitable for a mapped or swept mesh. A **Partition Domains** node can occur at any position in the geometry sequence; it works with output geometries before the **Form Union/Assembly** node, assembly geometries, and virtual geometries. The output of a **Partition Domains** node's partitioning operation includes the same number of geometry objects as the input to the partitioning. To add it to a 2D or 3D geometry, in the **Geometry** toolbar, from the **Boolean and Partitions** menu ( ), select **Partition Domains**. You can also right-click the **Geometry** node to add this from the **Boolean and Partitions** submenu. Then enter the properties of the partitioning operation using the following sections:

PARTITION DOMAINS

In the **Domains to partition** list, add the domains that you want to partition.

From the **Partition with** list in 2D, choose one of the following methods for defining the curves for partitioning the domains:

- Choose **Line segments between vertices** (the default) to define line segments using vertices (points) in the geometry, which you add to the **Vertices defining line segments** list.
- Choose **Lines through vertices** to define partitioning lines that pass through the vertices in the **Vertices defining lines** list. The lines through the vertices extend to the perimeters of the selected domains.
- Choose **Edges** to select edges in the geometry as the partitioning curves. Add the edges to use for partitioning to the **Edges** list.
- Choose **Extended edges** to use the lines and circles defined by straight and circular edges, respectively, as partitioning curves. Add the edges to use for partitioning to the **Straight or circular edges** list.
- Choose **Objects** to use geometry objects that you add to the **Objects** list for partitioning the domains. The objects used for partitioning remain for further geometry operations.

Using the **Vertices defining line segments** or **Vertices defining lines** list, it is possible to select any number of vertices (greater than 1). The operation automatically groups the selected vertices into pairs according to minimal distances and defines one partitioning line segment or line per pair.

From the **Partition with** list in 3D, choose one of the following methods for defining the surfaces for partitioning the domains:

- Choose **Work plane** (the default) to partition the domain using a work plane that you choose from the **Work plane** list. Click the **Go to Source** button ( ) to move to the **Work Plane** node for the selected work plane.
- Choose **Faces** to select faces in the geometry as the partitioning faces. Add the faces to use for partitioning to the **Faces** list.
- Choose **Extended faces** to use the surfaces defined by planar, cylindrical, and spherical faces as partitioning surfaces. Add the faces to use for partitioning to the **Planar, cylindrical, or spherical faces** list.
- Choose **Objects** to use geometry objects that you add to the **Objects** list for partitioning the domains. The objects used for partitioning remain for further geometry operations. When **Objects** is selected, you can clear the **Keep objects** check box (selected by default) to not keep the objects use for the partitioning in the resulting geometry.

The **Objects** option in the **Partition with** list is not available if the **Partition Domains** node appears after the **Form Union/Assembly** node.

You can change the settings for the **Repair tolerance** list if you experience problems with the partition operation. Geometric entities that have a distance less than the repair tolerance are merged.

- The default value in the **Repair tolerance** list is **Automatic**, which for 3D objects represented using the CAD kernel determines the repair tolerance internally. For 3D objects represented using the COMSOL kernel, and for 2D and 1D objects, **Automatic** means a relative repair tolerance of 10^{-6}.
- Choose **Relative** to enter a value for the **Relative repair tolerance** field (the default is determined by the main **Geometry** node's setting). This value is relative to the largest absolute value of the coordinates of all input objects.
- Choose **Absolute** to enter a value for the **Absolute repair tolerance** field (the default is determined by the main **Geometry** node's setting; SI unit: m). This value uses the same unit as the geometry sequence's length unit.

When you build this feature, the relative and absolute repair tolerances are set to the values that are used (with a precision of two digits), which can be useful when you have set **Repair tolerance** to **Automatic**.

SELECTIONS OF RESULTING ENTITIES

Select the **Resulting objects selections** check box to create predefined selections for all or some of domains, boundaries, edges, and points that the resulting objects consist of. Select **All levels**, **Domain selection** (the default), **Boundary selection**, **Edge selection** (3D only), **Point selection**, of **Off** from the **Show in physics** (**Show in instances** if in a geometry part, **Show in 3D** if in a work plane's plane geometry) list. These selections are available in all applicable selection lists under the physics, mesh, materials, and results branches but do not appear as separate selection nodes in the model tree. From the **Color** list, choose a color for highlighting the resulting objects selection. See Selection Colors.

Cumulative Selection

If you want to make the selections contribute to a cumulative selection, select a cumulative selection from the **Contribute to** list, or click the **New** button to create a new cumulative selection (see Cumulative Selections).

Partition Edges

The **Partition Edges** node ( ) provides an operation that partitions selected edges at specified locations. You can specify the positions by entering parameters based on the arc length or by selecting existing vertices whose orthogonal projections on the edges specify the positions. A **Partition Edges** node can occur at any position in the geometry sequence; it works with output geometries before the **Form Union/Assembly** node, assembly geometries, and virtual geometries. To add it to a 2D or 3D geometry, in the **Geometry** toolbar, from the **Boolean and Partitions** ( ) menu, select **Partition Edges**. You can also right-click the **Geometry** node to add this from the **Boolean and Partitions** submenu. Then enter the properties of the partitioning operation using the following sections:

EDGE SELECTION

In the **Edges to partition** list, add the edges that you want to partition. If you select multiple edges and multiple vertices, then the number of edges and the number of vertices must be the same.

POSITIONS

Specify the positions of the vertices used to project for the edge partitioning. From the **Type of specification** list, choose **Arc length** (the default) to add one or more parameters for the edge partitioning in the **Relative arc length parameters** list. The relative arc length parameters are scalar values between 0 and 1, providing relative arc length values of each edge that define the location of the partitioning vertices. Alternatively, choose **Vertex projection** to add vertices to the **Vertices to project** list. Then each edge for which the orthogonal projection of the vertex occurs in the interior is partitioned at the projection.

SELECTIONS OF RESULTING ENTITIES

Select the **Resulting objects selection** check box to create predefined selections (for all levels — objects, domains, boundaries, edges, and points — that are applicable) in subsequent nodes in the geometry sequence. To also make all or one of the types of resulting entities (domains, boundaries, edges, and points) that the resulting objects consist of available as selections in all applicable selection lists (in physics and materials settings, for example), choose an option from the **Show in physics** (**Show in instances** if in a geometry part, **Show in 3D** if in a work plane's plane geometry) list: **All levels**, **Domain selection**, **Boundary selection**, **Edge selection**, or **Point selection**. The default is **Domain selection**, which is suitable for use with materials and physics defined in domains. For use with a boundary condition, for example, choose **Boundary selection**. These selections do not appear as separate selection nodes in the model tree. Select **Off** to not make any selection available outside of the geometry sequence. From the **Color** list, choose a color for highlighting the resulting objects selection. See Selection Colors.

Cumulative Selection

If you want to make the resulting entities contribute to a cumulative selection, select a cumulative selection from the **Contribute to** list (the default, **None**, gives no contribution), or click the **New** button to create a new cumulative selection (see Cumulative Selections).

Partition Faces

The **Partition Faces** node ( ) provides an operation that partitions selected faces at specified locations. You can specify the positions using curve segments between vertices, extended edges, or a work plane. A **Partition Faces** node can occur at any position in the geometry sequence; it works with output geometries before the **Form Union/Assembly** node, assembly geometries, and virtual geometries. To add it to a 3D geometry, in the **Geometry** toolbar, from the **Boolean and Partitions** ( ) menu, select **Partition Faces**. You can also right-click the **Geometry** node to add this from the **Boolean and Partitions** submenu. Then enter the properties of the partitioning operation using the following sections:

PARTITION FACES

First select the faces to partition in the geometry. The faces appear in the list under **Faces to partition**.

From the **Partition with** list, choose one of the following methods for defining the curves for partitioning the faces:

- Choose **Curve segments between vertices** (the default) to select vertices adjacent to the faces to partition. Add the vertices to use for partitioning to the **Vertices defining curve segments** list. The faces to partition is then partitioned along the curves (lines) connecting the selected vertices.
- Choose **Work plane** to partition the faces using a work plane that you choose from the **Work plane** list. Click the **Go to Source** button ( ) to move to the **Work Plane** node for the selected work plane.
- Choose **Extended edges** to partition the selected faces with extensions of adjacent edges by adding the edges to the **Planar edges** list.

	Planar faces can only be partitioned by planar edges that are straight or circular while nonplanar faces can be partitioned by any type of planar edge.

You can change the settings for the **Repair tolerance** list if you experience problems with the partition operation. Geometric entities that have a distance less than the repair tolerance are merged.

- The default value in the **Repair tolerance** list is **Automatic**, which for 3D objects represented using the CAD kernel determines the repair tolerance internally. For 3D objects represented using the COMSOL kernel, and for 2D and 1D objects, **Automatic** means a relative repair tolerance of 10^{-6}.
- Choose **Relative** to enter a value for the **Relative repair tolerance** field (the default is determined by the main **Geometry** node's setting). This value is relative to the largest absolute value of the coordinates of all input objects.
- Choose **Absolute** to enter a value for the **Absolute repair tolerance** field (the default is determined by the main **Geometry** node's setting; SI unit: m). This value uses the same unit as the geometry sequence's length unit.

When you build this feature, the relative and absolute repair tolerances are set to the values that are used (with a precision of two digits), which can be useful when you have set **Repair tolerance** to **Automatic**.

SELECTIONS OF RESULTING ENTITIES

Select the **Resulting objects selection** check box to create predefined selections (for all levels — objects, domains, boundaries, edges, and points — that are applicable) in subsequent nodes in the geometry sequence. To also make all or one of the types of resulting entities (domains, boundaries, edges, and points) that the resulting objects consist of available as selections in all applicable selection lists (in physics and materials settings, for example), choose an

option from the **Show in physics** (**Show in instances** if in a geometry part) list: **All levels**, **Domain selection**, **Boundary selection**, **Edge selection**, or **Point selection**. The default is **Domain selection**, which is suitable for use with materials and physics defined in domains. For use with a boundary condition, for example, choose **Boundary selection**. These selections do not appear as separate selection nodes in the model tree. Select **Off** to not make any selection available outside of the geometry sequence. From the **Color** list, choose a color for highlighting the resulting objects selection. See Selection Colors.

Cumulative Selection

If you want to make the resulting entities contribute to a cumulative selection, select a cumulative selection from the **Contribute to** list (the default, **None**, gives no contribution), or click the **New** button to create a new cumulative selection (see Cumulative Selections).

Revolve

To revolve planar objects into 3D, right-click a geometry or a work plane node, and select **Revolve** ( ). Then enter the properties of the revolve operation.

GENERAL

From the **Revolve from** list, select **Faces** to revolve planar faces from the 3D geometry. Select the faces that you want to revolve in the Graphics window. These appear in the **Input faces** list. All selected faces must lie in the same plane.

Alternatively, from the **Revolve from** list, select **Work plane** to revolve objects from a work plane. In the **Work plane** list, select the work plane to revolve from. Select the objects that you want to revolve in the Graphics window. They appear in the **Input objects** list.

Click the **Active** button to toggle between turning ON and OFF the **Input objects** or **Input faces** selections.

Select the **Unite with input objects** check box to unite the input objects with the revolved objects. Clear the **Unite with input objects** check box to keep the revolved objects separate from the input objects.

REVOLUTION ANGLES

Click the **Angles** button to specify the start angle (default: 0 degrees) and end angle (default value: 360 degrees; that is, a full revolution) of the revolution. If you click the **Full revolution** button you get a full revolution. This selection also enables the **Keep original faces** check box that controls if the original faces are kept in the revolved 3D geometry. Keeping these faces is necessary if you want to create a swept mesh. By default, COMSOL keeps such faces.

REVOLUTION AXIS

Select **2D** in the **Axis type** list to specify the revolution axis in the local coordinate system. When revolving work plane objects, the local coordinate system is defined by the work plane's coordinate system. When revolving planar faces, the local coordinate system is defined by the face with the smallest face number in the first geometry object in the geometry sequence. Select **3D** in the **Axis type** list to specify the revolution axis in the 3D coordinate system.

POINT ON THE REVOLUTION AXIS

Specify a point on the revolution axis in the local coordinate system in the **xw** and **yw** fields. Alternatively, if **Axis type** is **3D**, specify a point on the revolution axis in the 3D coordinate system in the **x**, **y**, and **z** fields.

DIRECTION OF REVOLUTION AXIS

Specify a direction vector for the revolution axis in the local coordinate system in the **xw** and **yw** fields. Alternatively, if **Axis type** is **3D**, specify a direction vector for the revolution axis in the 3D coordinate system in the **x**, **y**, and **z** fields.

SELECTIONS OF RESULTING ENTITIES

Select the **Resulting objects selection** check box to create predefined selections (for all levels — objects, domains, boundaries, edges, and points — that are applicable) in subsequent nodes in the geometry sequence. To also make all or one of the types of resulting entities (domains, boundaries, edges, and points) that the resulting objects consist of available as selections in all applicable selection lists (in physics and materials settings, for example), choose an option from the **Show in physics** (**Show in instances** if in a geometry part) list: **All levels**, **Domain selection**, **Boundary selection**, **Edge selection**, or **Point selection**. The default is **Domain selection**, which is suitable for use with materials and physics defined in domains. For use with a boundary condition, for example, choose **Boundary selection**. These selections do not appear as separate selection nodes in the model tree. Select **Off** to not make any selection available outside of the geometry sequence. From the **Color** list, choose a color for highlighting the resulting objects selection. See Selection Colors.

Cumulative Selection

If you want to make the resulting entities contribute to a cumulative selection, select a cumulative selection from the **Contribute to** list (the default, **None**, gives no contribution), or click the **New** button to create a new cumulative selection (see Cumulative Selections).

Rigid Transform

Use a **Rigid Transform** node to perform a rigid transform (translation and rotation) of 3D geometry objects. You can use this feature to position and orient geometry objects by matching a coordinate system (work plane) with another coordinate system (work plane) and then optionally performing a rotation and translation in the work plane's coordinate system.

To add a rigid transformation, in the **Geometry** toolbar, from the **Transforms** ( ) menu, select **Rigid Transform** ( ). You can also right-click the **Geometry** or a **Work Plane** feature to add this from the **Transforms** submenu.

Enter the properties of the rigid transform using the following sections:

INPUT

Select the geometry objects for which you want to perform a rigid transformation in the **Graphics** window. The objects appear in the **Input objects** list. If the geometry sequence includes user-defined selections above the **Rigid Transformation** node, choose **Manual** to select objects, or choose one of the selection nodes from the list next to **Input objects**.

Click the **Active** button to toggle between turning ON and OFF the **Input objects** selections.

Select the **Keep input objects** check box to use the selected geometry objects for further geometry operations.

COORDINATE SYSTEM FOR OBJECTS

Choose the coordinate system for the geometry objects from the **Work plane for objects** list. You can choose among all work planes in the geometry. You can also choose **xy-plane**, which corresponds to the global coordinate system (this is the default).

COORDINATE SYSTEM TO MATCH

To choose the coordinate system to match, select a work plane from the **Work plane** list. The default is **xy-plane**, which corresponds to the global coordinate system. The work plane to match is visualized in the graphics.

DISPLACEMENT

Enter values or expressions for the **xw**, **yw**, and **zw** coordinates (SI unit: m) to add a displacement vector relative to the coordinate system to match.

ROTATION

From the **Specify** list, choose **Axis of rotation** (the default) or **Euler angles (Z-X-Z)** as the way to specify the rotation.

Axis of Rotation

Select an **Axis type**: **xw-axis**, **yw-axis**, **zw-axis** (the default), **Cartesian**, or **Spherical**. For any choice, enter an **Angle** (SI unit: degrees; default 0) to rotate the orientation of the output relative to the coordinate system to match.

If **Cartesian** is selected, enter Cartesian coordinates values for **xw**, **yw**, and **zw** (default values 0, 0, and 1, respectively, corresponding to the global *zw*-axis) to specify the axis vector. If **Spherical** is selected, specify the axis vector using spherical angles **theta** and **phi** in degrees (default: 0).

Euler Angles (Z-X-Z)

Enter values for the intrinsic Z-X-Z Euler angles α, β, and γ in the corresponding text fields (in degrees; the default values are 0).

SELECTIONS OF RESULTING ENTITIES

Select the **Resulting objects selection** check box to create predefined selections (for all levels — objects, domains, boundaries, edges, and points — that are applicable) in subsequent nodes in the geometry sequence. To also make all or one of the types of resulting entities (domains, boundaries, edges, and points) that the resulting objects consist of available as selections in all applicable selection lists (in physics and materials settings, for example), choose an option from the **Show in physics** (**Show in instances** if in a geometry part, **Show in 3D** if in a work plane's plane geometry) list: **All levels**, **Domain selection**, **Boundary selection**, **Edge selection**, or **Point selection**. The default is **Domain selection**, which is suitable for use with materials and physics defined in domains. For use with a boundary condition, for example, choose **Boundary selection**. These selections do not appear as separate selection nodes in the model tree. Select **Off** to not make any selection available outside of the geometry sequence. From the **Color** list, choose a color for highlighting the resulting objects selection. See Selection Colors.

Cumulative Selection

If you want to make the resulting entities contribute to a cumulative selection, select a cumulative selection from the **Contribute to** list (the default, **None**, gives no contribution), or click the **New** button to create a new cumulative selection (see Cumulative Selections).

Rotate

To rotate geometry objects, in the **Geometry** toolbar, from the **Transforms** ( ) menu, select **Rotate** ( ). You can also right-click the **Geometry** or a **Work Plane** feature to add this from the **Transforms** submenu. You can create one or multiple rotated copies with varying rotation angles. Then enter the properties of the rotate operation using the following sections:

INPUT

Select the geometry objects that you want to rotate in the **Graphics** window. The objects appear in the **Input objects** list. If the geometry sequence includes user-defined selections above the **Rotate** node, choose **Manual** to select objects, or choose one of the selection nodes from the list next to **Input objects**.

Click the **Active** button to toggle between turning ON and OFF the **Input objects** selections.

Select the **Keep input objects** check box to use the selected geometry objects for further geometry operations.

ROTATION

2D Settings

In 2D, specify an **Angle** (in degrees; default: 0) for the rotation. To get several rotated objects, enter a list of angles separated with commas or spaces or using the `range` function. Click the **Range** button ( ) to define a range of

angles using the **Range** dialog box. For example, `range(0,45,315)` creates eight objects, one at the original position and seven rotated copies at 45 degrees distance around a full 360 degrees circle.

3D Settings

In 3D, use the following settings to specify the rotation.

From the **Specify** list, choose **Axis of rotation** (the default) or **Euler angles (Z-X-Z)** as the way to specify the rotation.

- For **Axis of rotation**, select an **Axis type**: **xw-axis**, **yw-axis**, **zw-axis** (the default), **Cartesian**, or **Spherical**. For any choice, enter an **Angle** (SI unit: degrees; default 0) to specify the rotation (see *2D Settings* above). If **Cartesian** is selected, enter Cartesian coordinates values for **x**, **y**, and **z** (default values 0, 0, and 1, respectively, corresponding to the global *z*-axis) to specify the axis vector. If **Spherical** is selected, specify the axis vector using spherical angles **theta** and **phi** in degrees (default: 0).
- For **Euler angles (Z-X-Z)**, enter values for the intrinsic Z-X-Z Euler angles α, β, and γ in the corresponding text fields (in degrees; the default values are 0).

CENTER OF ROTATION

	Enter the center of the rotation in the **x** and **y** (for 2D); ***r*** and **z** (in 2D axial symmetry); and **xw** and **yw** in work plane fields.

POINT ON AXIS OF ROTATION

	Enter a point on the rotation axis in the **x**, **y**, and **z** fields.

COORDINATE SYSTEM

The coordinate system in which the point coordinates and axis of rotation above are interpreted (in 3D geometries only). From the **Work plane** list, select **xy-plane** (the default, for a standard global Cartesian coordinate system) or select any work plane defined above this node in the geometry sequence. If you choose a work plane, the work plane and its coordinate system appears in the Graphics window, using an extra coordinate triad with the directions **xw**, **yw**, and **zw** (which are then used to specify the rotation axis position).

SELECTIONS OF RESULTING ENTITIES

Select the **Resulting objects selection** check box to create predefined selections (for all levels — objects, domains, boundaries, edges, and points — that are applicable) in subsequent nodes in the geometry sequence. To also make all or one of the types of resulting entities (domains, boundaries, edges, and points) that the resulting objects consist of available as selections in all applicable selection lists (in physics and materials settings, for example), choose an option from the **Show in physics** (**Show in instances** if in a geometry part, **Show in 3D** if in a work plane's plane geometry) list: **All levels**, **Domain selection**, **Boundary selection**, **Edge selection**, or **Point selection**. The default is **Domain selection**, which is suitable for use with materials and physics defined in domains. For use with a boundary condition, for example, choose **Boundary selection**. These selections do not appear as separate selection nodes in the model tree. Select **Off** to not make any selection available outside of the geometry sequence. From the **Color** list, choose a color for highlighting the resulting objects selection. See Selection Colors.

Cumulative Selection

If you want to make the resulting entities contribute to a cumulative selection, select a cumulative selection from the **Contribute to** list (the default, **None**, gives no contribution), or click the **New** button to create a new cumulative selection (see Cumulative Selections).

Scale

To scale geometry objects, in the **Geometry** toolbar, from the **Transforms** ( ) menu, select **Scale** ( ). You can also right-click the **Geometry** or a **Work Plane** feature to add this from the **Transforms** submenu. Then enter the properties of the scale operation using the following sections:

INPUT

Select the geometry objects that you want to scale in the **Graphics** window. The objects appear in the **Input objects** list. If the geometry sequence includes user-defined selections above the **Scale** node, choose **Manual** to select objects, or choose one of the selection nodes from the list next to **Input objects**.

Click the **Active** button to toggle between turning ON and OFF the **Input objects** selections.

Select the **Keep input objects** check box to use the selected geometry objects for further geometry operations.

SCALE FACTOR

By default, you get an isotropic scaling. Specify the scaling factor in the **Factor** field.

To get an anisotropic scaling, change **Scaling** to **Anisotropic**, and specify separate scale factors for the coordinate directions in the **x**, **y**, and (3D only) **z** fields; ***r*** and **z** in 2D axial symmetry; **xw** and **yw** in work planes.

CENTER OF SCALING

Specify the centerpoint of the scaling by specifying **x**, **y**, and(3D only) **z**; ***r*** and **z** in 2D axial symmetry; **xw** and **yw** in work planes. This is the point that stays fixed during the scaling (that is, the point that the scaled geometry objects approach when the scale factor goes to zero).

COORDINATE SYSTEM

The coordinate system in which the center of scaling coordinates above are interpreted (in 3D geometries only). From the **Work plane** list, select **xy-plane** (the default, for a standard global Cartesian coordinate system) or select any work plane defined above this node in the geometry sequence. If you choose a work plane, the work plane and its coordinate system appears in the Graphics window, using an extra coordinate triad with the directions **xw**, **yw**, and **zw** (which are then used to specify the center of scaling).

SELECTIONS OF RESULTING ENTITIES

Select the **Resulting objects selection** check box to create predefined selections (for all levels — objects, domains, boundaries, edges, and points — that are applicable) in subsequent nodes in the geometry sequence. To also make all or one of the types of resulting entities (domains, boundaries, edges, and points) that the resulting objects consist of available as selections in all applicable selection lists (in physics and materials settings, for example), choose an option from the **Show in physics** (**Show in instances** if in a geometry part, **Show in 3D** if in a work plane's plane geometry) list: **All levels**, **Domain selection**, **Boundary selection**, **Edge selection**, or **Point selection**. The default is **Domain selection**, which is suitable for use with materials and physics defined in domains. For use with a boundary condition, for example, choose **Boundary selection**. These selections do not appear as separate selection nodes in the model tree. Select **Off** to not make any selection available outside of the geometry sequence. From the **Color** list, choose a color for highlighting the resulting objects selection. See Selection Colors.

Cumulative Selection

If you want to make the resulting entities contribute to a cumulative selection, select a cumulative selection from the **Contribute to** list (the default, **None**, gives no contribution), or click the **New** button to create a new cumulative selection (see Cumulative Selections).

Split

The **Split** ( ) operation splits an object into its entities:

- A solid splits into solids corresponding to its domains.
- A surface object splits into surface objects corresponding to its faces.
- A curve object splits into curve objects corresponding to its edges.
- A point object splits into point objects corresponding to its vertices.
- A general (mixed) object splits into solids (corresponding to the domains), surface objects (corresponding to faces not adjacent to a domain), curve objects (corresponding to edges not adjacent to a face or domain), and point objects (corresponding to vertices not adjacent to an edge, face, or domain).

To split geometry objects into their entities, in the **Geometry** toolbar, from the **Conversions** menu, select **Split** ( ). Then enter the properties of the split operation in the **Input** section.

INPUT

Select the geometry objects to split on in the **Graphics** window. The objects appear in the **Input objects** list. If the geometry sequence includes user-defined selections above the **Split** node, choose **Manual** to select objects, or choose one of the selection nodes from the list next to **Input objects**.

Click the **Active** button to toggle between turning ON and OFF the **Input objects** selections.

Select the **Keep input objects** check box to use the selected geometry objects for further geometry operations.

SELECTIONS OF RESULTING ENTITIES

Select the **Resulting objects selection** check box to create predefined selections (for all levels — objects, domains, boundaries, edges, and points — that are applicable) in subsequent nodes in the geometry sequence. To also make all or one of the types of resulting entities (domains, boundaries, edges, and points) that the resulting objects consist of available as selections in all applicable selection lists (in physics and materials settings, for example), choose an option from the **Show in physics** (**Show in instances** if in a geometry part; **Show in 3D** in a plane geometry under a work plane in a 3D component) list: **All levels**, **Domain selection**, **Boundary selection**, **Edge selection**, or **Point selection**. The default is **Domain selection**, which is suitable for use with materials and physics defined in domains. For use with a boundary condition, for example, choose **Boundary selection**. These selections do not appear as separate selection nodes in the model tree. Select **Off** to not make any selection available outside of the geometry sequence.

Cumulative Selection

If you want to make the resulting entities contribute to a cumulative selection, select a cumulative selection from the **Contribute to** list (the default, **None**, gives no contribution), or click the **New** button to create a new cumulative selection (see Cumulative Selections). From the **Color** list, choose a color for highlighting the resulting objects selection. See Selection Colors.

Sweep

Select **Sweep** ( ) from the **Geometry** toolbar to sweep one or several faces along a curve. Then enter the properties of the sweep operation using the following sections:

CROSS SECTION

Select the faces you want to sweep in the **Graphics** window. The faces appear in the **Faces to sweep** list. Click the **Active** button to toggle between turning ON and OFF the **Faces to sweep** selections.

Select the **Create cross-sectional faces** check box (active by default) to make the sweep operation create cross-sectional faces between the sweep sections. Such cross-sectional faces can be useful, for example, for a swept mesh where you want to specify the mesh distribution for each section of the sweep.

SPINE CURVE

Select the edges you want to sweep along in the **Graphics** window. More than one edge can be selected, but the selected edges must form a nonclosed connected chain. The edges appear in the **Edges to follow** list. Click the **Active** button to toggle between turning ON and OFF the **Edges to follow** selections.

Select the **Reverse direction** check box to sweep in the negative edge direction.

The **Smooth edge connections** check box is selected by default. Clearing this check box means that transition zones are not added, which can give a better result in cases where the original edges already connect with a continuous tangent.

From the **Parameterization** list, select one of the following options:

- **Arc length** (the default) to use a parameterization based on the arc length of the spine curve.
- **Normalized arc length** to use a similar parameterization but with a normalized arc length (values 0–1). If it is more suitable to express the scale factor and the twist angle using the original parameter, you can use the normalized arc length parameterization instead of the default arc length parameterization.
- **Internal** to use the parameterization that is stored in the geometry's data structures. This is the parameterization used in earlier versions of COMSOL Multiphysics. It can also be useful if the edge that you sweep along do not need a parameterization, or a parameterization is unsuitable for that edge.

KEEP INPUT

Select the **Keep input objects** check box to use the selected geometry objects for further geometry operations.

Select the **Include all inputs in finalize operation** check box to force the objects in the **Face to sweep** and **Edges to follow** lists to be included in the Form Union/Assembly operation. If the **Include all inputs in finalize operation** check box is not selected, these objects are not included in the Form Union/Assembly operation if the **Face to sweep** list or **Edges to follow** list contains all faces or edges in the objects.

MOTION OF CROSS SECTION

This section contains a number of properties that determine how the face is transformed when swept along the spine curve.

A curve parameter name can be defined in the **Parameter name** field. Use this parameter in the expressions defining scale factor and twist angle. The parameter is increasing along the chain of edges to follow. It is not the same as the parameter `s1` available in Results. For a single edge created by a Parametric Curve, the parameter is the same as the parameter used in the Parametric Curve.

The **Scale factor** field controls the size of the cross section face when swept along the spine curve.

The **Twist angle** field controls the rotation angle of the cross section face about the spine curve.

By default, twist compensation is active and prevents the twisting that would otherwise occur due to nonzero torsion for nonplanar curves. Clear the **Twist compensation** check box to turn off this compensation. When **Twist compensation** is active, it behaves as if a term was added to the **Twist angle** with a magnitude matching the integral of the torsion of the curve. This makes the edges in the sweep direction locally parallel to the spine curve. For a noncircular cross section, twist compensation also affects the shape of the generated object.

From the **Face-spine alignment** list, select an option to align the cross section to the spine curve:

- Select **No adjustment** (the default) to sweep the face starting from its original position. Using this setting, it is possible to create sweeps where the face is not perpendicular to the spine curve, and where the face does not contain that starting point of the spine curve.
- Select **Adjust spine** to adjust the spine curve so that it starts on the face to sweep and so that it is parallel to the face normal at the point where it touches the face. The first part of the spine curve is replaced by a cubic Bézier curve, with the length of the replaced part, measured in parameter values, controlled by the value in the **Adjustment parameter length** field.
- Select **Move face** to move the face to the start of the spine curve and orient the face perpendicularly to the spine curve. This setting is only allowed when the face is located in a work plane, and the movement is such that the work plane origin coincides with the spine curve.

ADVANCED SETTINGS

From the **Geometry representation** list, select **Spline** (the default) to represent the swept object using splines, or **Bézier**, to represent the swept object using Bézier curves. The difference is that using Bézier curves, the intersections between the surfaces that form the swept object are visible edges, whereas they are hidden when using splines.

The value in the **Relative tolerance** field is a relative tolerance that controls the accuracy of the geometric representation of the swept object. The geometric representation is an approximation, which is necessary because it is not possible to exactly represent a swept object using NURBS (nonuniform rational basis splines). The default value is 10^{-4} (0.01%).

Internally, the software represents the swept object by B-spline curves and surfaces, which are computed to approximate the mathematical definition of the swept surface. The number of knot points in the splines increases automatically until the approximation satisfies the tolerance specified in the **Relative tolerance** field or until it reaches the number of knots specified in the **Maximum number of knots** field (default value: 1000).

If more than one edge is selected in the **Edges to follow** list, the **Direction-defining edge** controls which edge is used to define the positive sweep direction. The **Direction-defining edge** is automatically set when the first edge is added to the **Edges to follow** list, so usually it does not have to be changed manually.

SELECTIONS OF RESULTING ENTITIES

Select the **Resulting objects selection** check box to create predefined selections (for all levels — objects, domains, boundaries, edges, and points — that are applicable) in subsequent nodes in the geometry sequence. To also make all or one of the types of resulting entities (domains, boundaries, edges, and points) that the resulting objects consist of available as selections in all applicable selection lists (in physics and materials settings, for example), choose an option from the **Show in physics** (**Show in instances** if in a geometry part) list: **All levels**, **Domain selection**, **Boundary selection**, **Edge selection**, or **Point selection**. The default is **Domain selection**, which is suitable for use with materials and physics defined in domains. For use with a boundary condition, for example, choose **Boundary selection**. These selections do not appear as separate selection nodes in the model tree. Select **Off** to not make any selection available outside of the geometry sequence. From the **Color** list, choose a color for highlighting the resulting objects selection. See Selection Colors.

Cumulative Selection

If you want to make the resulting entities contribute to a cumulative selection, select a cumulative selection from the **Contribute to** list (the default, **None**, gives no contribution), or click the **New** button to create a new cumulative selection (see Cumulative Selections).

Tangent

To create a tangent (that is, a line segment tangential to a specified edge), in the **Geometry** toolbar, click **Tangent** ( ). You can also right-click the **Geometry** node to add this node from the context menu. Then enter the properties of the tangent.

TANGENT

Select the edge you want to tangent in the **Graphics** window. Only one edge can be selected. The edge appears in the **Edge to tangent** list.

Click the **Active** button to toggle between turning ON and OFF the **Edge to tangent** selections.

Parameter start guess is a number between 0 and 1 that specifies where on the edge the expected point of tangency is located. The tangent returned is the first tangent found starting the search from the start guess.

Type of tangent specifies how the endpoint of the tangent is specified. There are three options: **Edge–edge**, **Edge–point**, and **Edge–coordinate**.

When the type is edge–edge, you use the **Graphics** window to select a second edge to tangent. The edge appears in the **Second edge to tangent** box. The line segment created is tangent to both edges. Use **Parameter start guess for second edge** to specify the start guess for the second edge, it is a number between 0 and 1. Click the **Active** button to toggle between turning ON and OFF the **Second edge to tangent** selections.

When the type is edge–point, you use the **Graphics** window to select a point in the geometry as a tangent's endpoint. The point appears in the **Point** list.

When the type is edge–coordinate, manually specify the coordinates of the tangent's endpoint.

SELECTIONS OF RESULTING ENTITIES

Select the **Resulting objects selection** check box to create predefined selections (for all levels — objects, domains, boundaries, edges, and points — that are applicable) in subsequent nodes in the geometry sequence. To also make all or one of the types of resulting entities (domains, boundaries, edges, and points) that the resulting objects consist of available as selections in all applicable selection lists (in physics and materials settings, for example), choose an option from the **Show in physics** (**Show in instances** if in a geometry par; **Show in 3D** in a plane geometry under a work plane in a 3D component) list: **All levels**, **Domain selection**, **Boundary selection**, or **Point selection**. The default is **Domain selection**, which is suitable for use with materials and physics defined in domains. For use with a boundary condition, for example, choose **Boundary selection**. These selections do not appear as separate selection nodes in the model tree. Select **Off** to not make any selection available outside of the geometry sequence. From the **Color** list, choose a color for highlighting the resulting objects selection. See Selection Colors.

Cumulative Selection

If you want to make the resulting entities contribute to a cumulative selection, select a cumulative selection from the **Contribute to** list (the default, **None**, gives no contribution), or click the **New** button to create a new cumulative selection (see Cumulative Selections).

Union

To create the union of geometry objects, in the **Geometry** toolbar, from the **Boolean and Partitions** ( ) menu, select **Union** ( ). You can also right-click the **Geometry** node to add this node from the **Boolean and Partitions** submenu. Then enter the properties of the union operation.

UNION

Select the geometry object that you want to unite in the **Graphics** window. The objects appear in the **Input objects** list. If the geometry sequence includes user-defined selections above the **Union** node, choose **Manual** to select geometry objects, or choose one of the selection nodes from the list next to **Input objects**.

Click the **Active** button to toggle between turning ON and OFF the **Input objects** selections.

Select the **Keep input objects** check box to use the selected geometry objects for further geometry operations.

Create a geometry object without interior boundaries by clearing the **Keep interior boundaries** check box. This can be useful to simplify a geometry where the interior boundaries do not separate domains with different physics nodes or materials, for example.

You can change the settings for the **Repair tolerance** list if you experience problems with the union operation. Geometric entities that have a distance less than the repair tolerance are merged.

- The default value in the **Repair tolerance** list is **Automatic**, which for 3D objects represented using the CAD kernel determines the repair tolerance internally. For 3D objects represented using the COMSOL kernel, and for 2D and 1D objects, **Automatic** means a relative repair tolerance of 10^{-6}.
- Choose **Relative** to enter a value for the **Relative repair tolerance** field (the default is determined by the main **Geometry** node's setting). This value is relative to the largest absolute value of the coordinates of all input objects.
- Choose **Absolute** to enter a value for the **Absolute repair tolerance** field (the default is determined by the main **Geometry** node's setting; SI unit: m). This value uses the same unit as the geometry sequence's length unit.

When you build this feature, the relative and absolute repair tolerances are set to the values that are used (with a precision of two digits), which can be useful when you have set **Repair tolerance** to **Automatic**.

SELECTIONS OF RESULTING ENTITIES

Select the **Resulting objects selection** check box to create predefined selections (for all levels — objects, domains, boundaries, edges, and points — that are applicable) in subsequent nodes in the geometry sequence. To also make all or one of the types of resulting entities (domains, boundaries, edges, and points) that the resulting objects consist of available as selections in all applicable selection lists (in physics and materials settings, for example), choose an option from the **Show in physics** (**Show in instances** if in a geometry part; **Show in 3D** in a plane geometry under a work plane in a 3D component) list: **All levels**, **Domain selection**, **Boundary selection**, **Edge selection**, or **Point selection**. The default is **Domain selection**, which is suitable for use with materials and physics defined in domains. For use with a boundary condition, for example, choose **Boundary selection**. These selections do not appear as separate selection nodes in the model tree. Select **Off** to not make any selection available outside of the geometry sequence. From the **Color** list, choose a color for highlighting the resulting objects selection. See Selection Colors.

Cumulative Selection

If you want to make the resulting entities contribute to a cumulative selection, select a cumulative selection from the **Contribute to** list (the default, **None**, gives no contribution), or click the **New** button to create a new cumulative selection (see Cumulative Selections).

Work Plane

To create a work plane for defining 2D objects in 3D (for example, for extruding a 2D object into a 3D object) or for defining the placement of the resulting objects of a Part Instance, in the **Geometry** toolbar, click **Work Plane** ( )

or right-click a 3D **Geometry** node and select **Work Plane**. Then enter the properties defining the location of the work plane in the following sections of its **Settings** window.

	Using Work Planes

PLANE DEFINITION

Plane Type

The layout of the **Work Plane** section depends on the selection in the **Plane type** list, where you select how to define the work plane. Choose one of the following types:

- Quick (the default)
- Face parallel
- Edge parallel
- Edge angle
- Circle perpendicular
- Normal vector
- Vertices
- Coordinates
- Transformed

Quick

In the **Plane** list, select one of the global coordinate planes *xy*, *yz*, *zx*, *yx*, *zy*, or *xz*, denoting the first and second axes of the work plane's local coordinate system. Specify an offset using one of the following settings in the **Offset type** list:

- **Distance** (the default) to define the distance from the coordinate plane in the third axis' direction using the **z-coordinate**, **x-coordinate**, or **y-coordinate** field (default value: 0; that is, no offset).
- **Through vertex** to define the position of the work plane in the third direction by selecting a vertex. The work plane's position then contains that vertex. Click the **Active** button to toggle between turning ON and OFF the **Offset vertex** selections.

Face parallel

Select a planar face in the **Graphics** window that is parallel to the work plane you want to create with the **Planar face** list set to **Manual**, or choose any applicable geometry object or selection. The list below then shows the selected face. Click the **Active** button to toggle between turning ON and OFF the **Planar face** selections. Specify an offset using one of the following settings in the **Offset type** list:

- **Distance** (the default) to define the distance in the **Offset in normal direction** field. You then offset the work plane along the normal of the planar face. By default, the work plane's normal is the outward normal of the face in the **Planar face** list. The default value: 0; that is, no offset.
- **Through vertex** to define the position of the work plane in the third direction by selecting a vertex. The work plane's position then includes the position of that vertex. Click the **Active** button to toggle between turning ON and OFF the **Offset vertex** selections.

To reverse the direction of the *z*-axis of the work plane's coordinate system, select the **Reverse normal direction** check box. This also swaps the coordinate axes in the work plane to preserve the positive orientation of the local coordinate system.

Edge parallel

Select a planar edge (that is not straight) in the **Graphics** window that is parallel to the work plane you want to create with the **Planar curved edge** list set to **Manual**, or choose any applicable geometry object or selection. The list below

then shows the selected edge. Click the **Active** button to toggle between turning ON and OFF the **Planar curved edge** selections.

Specify an offset using one of the following settings in the **Offset type** list:

- **Distance** (the default) to define the distance in the **Offset in normal direction** field. You then offset the work plane along the normal of the plane containing the edge. The default value: 0; that is, no offset.
- **Through vertex** to define the position of the work plane in the third direction by selecting a vertex. The work plane's position then includes the position of that vertex. Click the **Active** button to toggle between turning ON and OFF the **Offset vertex** selections.

To reverse the direction of the z-axis of the work plane's coordinate system, select the **Reverse normal direction** check box. This also swaps the coordinate axes in the work plane to preserve the positive orientation of the local coordinate system.

Edge angle

Activate the **Straight edge** list by first selecting its **Active** button and then select a straight edge with the **Straight edge** list set to **Manual**, or choose any applicable geometry object or selection. The list below then shows the selected edge. Similarly, activate the **Face adjacent to edge** list by first clicking its **Active** button and then select an adjacent face in the **Graphics** window or from the list. Also, specify a value in the **Angle between face and work plane** field (in degrees; the default value is 0). This results in a work plane through the given edge that makes the specified angle with the adjacent face.

By default, the origin of the local coordinate system coincides with the edge's start vertex, and the direction of the local x-axis coincides with the direction of the edge. If you select the **Reverse normal direction** check box, the origin instead is at the end vertex, and the normal direction of the local x-axis is reversed.

Circle perpendicular

Activate the **Circular edge** list by clicking its **Active** button. Then select a circular edge in the **Graphics** window. This results in a work plane perpendicular to the given circular edge. Use the **Point on plane** list to choose a vertex that the plane should go through:

- The edge's **Start vertex** (the default)
- The edge's **End vertex**.
- Some **Other verte**x, which you can choose from the **Vertex** list that opens.

You can then rotate the work plane around the normal direction of the circle's plane by specifying an **Angle offset** (in degrees; default value: 0 degrees). You can also reverse the work plane's normal direction using the **Reverse normal direction** check box.

The origin of the local coordinate system is at the circle's center. The local x-axis goes through the circle. Thus, if the geometry is rotationally symmetric, the symmetry axis coincides with the local y-axis. You can use this type of work plane together with a **Cross Section** node to get a 2D axisymmetric geometry corresponding to a rotationally symmetric 3D geometry.

Normal vector

Use this work plane type to orient an object so that one of its planar faces gets a prescribed normal vector.

Under **Normal vector**, in the **x**, **y**, and **z** fields (SI unit: m), enter the components of the normal vector.

Under **Point on plane**, from the **Specify** list, choose **Coordinates** (the default) or **Vertex**. For **Coordinates**, enter the coordinates for a point on the plane in the **x**, **y**, and **z** fields (SI unit: m). For **Vertex**, select a vertex in the geometry, or if available, use a user-defined vertex selection.

Vertices

In each of the lists **First vertex**, **Second vertex**, and **Third vertex**, select a vertex by first clicking the corresponding **Active** button and then selecting a vertex in the **Graphics** window. This creates a work plane parallel to a plane through the three vertices.

Specify an offset in the **Offset in normal direction** field (default value: 0; that is, no offset). The origin of the local coordinate system is located above the first vertex, and the vector to the second vertex becomes the local x-axis. Reverse the directions of the local z-axis and y-axis by selecting the **Reverse normal direction** check box.

Coordinates

This choice creates a work plane through the three points with the given coordinates. The origin of the local coordinate system coincides with **Point 1**. The x-axis of the local coordinate system is in the direction of the vector from **Point 1** to **Point 2**. The positive direction of the y-axis is determined by the condition that the vector from **Point 1** to **Point 3** has a positive y-component.

Transformed

Use the work plane type to create a work plane using a transformation of another work plane. From the **Take work plane from** list, select **This sequence** (the default) to use a work plane earlier in the same geometry sequence, or choose a geometry part that this geometry sequence calls earlier in the sequence. From the **Work plane to transform** list, select an available work plane (for example, **Work Plane 1 {wp1}**) from the selected geometry sequence or select **xy-plane** (the default).

Under **Displacement**, enter the desired displacements in the work plane's x, y, and z directions in the **xw**, **yw**, and **zw** fields, respectively. The defaults are 0 (that is, no displacement).

Under **Rotation**, from the **Specify** list, choose **Axis of rotation** (the default) or **Euler angles (Z-X-Z)** as the way to specify the rotation.

- For **Axis of rotation**, select an **Axis type**: **xw-axis**, **yw-axis**, **zw-axis** (the default), **Cartesian**, or **Spherical**. For any choice, enter a **Rotation angle** (SI unit: degrees; default 0) to specify the rotation. If **Cartesian** is selected, enter Cartesian coordinates values for **xw**, **yw**, and **zw** (default values 0, 0, and 1, respectively, corresponding to the global zw-axis) to specify the axis vector. If **Spherical** is selected, specify the axis vector using spherical angles **theta** and **phi** in degrees (default: 0).
- For **Euler angles (Z-X-Z)**, enter values for the intrinsic Z-X-Z Euler angles α, β, and γ in the corresponding text fields (in degrees; the default values are 0).

LOCAL COORDINATE SYSTEM

In this section you specify the local coordinate system in the work plane for most work plane types.

In the **Quick** work plane type:

- In the **Origin** list, choose the location of the origin of the work plane's coordinate system: **Global** (the default) or **Vertex projection**. In the latter case, also pick a vertex for the origin, which you add to the list under **Vertex for origin** (manually or by choosing an applicable geometry object or selection).
- In the **Local x-axis** list, choose how to define the local x-axis: **Natural** (the default), which means that the local x-axis corresponds to the first direction in the plane; for example, the y direction for a yz-plane. Alternatively, choose **Through vertex projection** to define the local x-axis through a vertex projection. Then choose a vertex for the local x-axis that you add to the **Vertex for axis** list (manually or by choosing an applicable geometry object or selection).

In the **Face parallel** plane type:

- In the **Origin** list, choose the location of the origin of the work plane's coordinate system: **Center of face** (the default), **Bounding box corner**, or **Vertex projection**. In the last case, choose a vertex for defining the origin that you add to the **Vertex for origin** list.
- In the **Local x-axis** list, choose how to define the local x-axis: **First parameter direction** (the default) or **Second parameter direction**, which are the local parameter directions of the face (represented by the variables `s1` and `s2`, respectively). Alternatively, choose **Through vertex projection** to define the local x-axis through a vertex projection. Then choose a vertex for the local x-axis that you add to the **Vertex for axis** list.

In the **Edge parallel** plane type:

- In the **Origin** list, choose the location of the origin of the work plane's coordinate system: The **Start vertex** (the default) or **End vertex** of the edge, or **Vertex projection**. In the last case, choose a vertex for defining the origin that you add to the **Vertex for origin** list.
- In the **Local x-axis** list, choose how to define the local x-axis: **Tangent direction** (the default), which means that the local x-axis follows the direction of the edge's tangent. Alternatively, choose **Through vertex projection** to define the local x-axis through a vertex projection. Then choose a vertex for the local x-axis that you add to the **Vertex for axis** list.

In the **Quick**, **Face parallel**, **Edge parallel**, **Edge angle**, **Circle perpendicular**, and **Vertices** work plane types:

- Enter displacements within the plane in the **xw-displacement** and **yw-displacement** fields if you want to move the origin of the local coordinate system. The displacements are specified in the original local coordinate system, before the rotation angle (below) is applied. The defaults are 0.
- Enter a rotation angle in the **Rotation** field if you want to rotate the local coordinate system. The default is 0 degrees; that is, no rotation.

UNITE OBJECTS

By default, the COMSOL Multiphysics software unites all objects in the 2D work plane, which can make it easier to, for example, extrude the 2D geometry into a 3D geometry object.

Clear the **Unite objects** check box if you do not want to unite the separate 2D geometry objects in the work plane. If the check box is selected, you can change the settings for the **Repair tolerance** list if you experience problems with the unite operation. Objects that have a distance less than the repair tolerance are merged.

- The default value in the **Repair tolerance** list is **Automatic**, which for 3D objects represented using the CAD kernel determines the repair tolerance internally. For 3D objects represented using the COMSOL kernel, and for 2D and 1D objects, **Automatic** means a relative repair tolerance of 10^{-6}.
- Choose **Relative** to enter a value for the **Relative repair tolerance** field (the default is determined by the main **Geometry** node's setting). This value is relative to the largest absolute value of the coordinates of all input objects.
- Choose **Absolute** to enter a value for the **Absolute repair tolerance** field (the default is determined by the main **Geometry** node's setting; SI unit: m). This value uses the same unit as the geometry sequence's length unit.

When you build this feature, the relative and absolute repair tolerances are set to the values that are used (with a precision of two digits), which can be useful when you have set **Repair tolerance** to **Automatic**.

PART INSTANCES

This section is only available for work planes in geometry parts.

Select the **Show work plane in instances** check box (selected by default) to make the work plane available in the **Part Instance** nodes' settings.

SELECTIONS OF RESULTING ENTITIES

Select the **Resulting objects selection** check box to create predefined selections (for all levels — objects, domains, boundaries, and points — that are applicable) in subsequent nodes in the geometry sequence. To also make all or one of the types of resulting entities (domains, boundaries, edges, and points) that the resulting objects consist of available as selections in all applicable selection lists (in physics and materials settings, for example), choose an option from the **Show in physics** (**Show in instances** if in a geometry part) list: **All levels**, **Object selection** (in geometry parts only), **Boundary selection**, **Edge selection**, or **Point selection**. The default is **Boundary selection**. These selections do not appear as separate selection nodes in the model tree. Select **Off** to not make any selection available outside of the geometry sequence. From the **Color** list, choose a color for highlighting the resulting objects selection. See Selection Colors.

Under **Selections from plane geometry**, select the **Show in physics** (**Show in instances** if in a geometry part) check box to show selections from the work plane's plane geometry in the physics or in part instances. For example, a selection in the plane geometry can be used as the boundaries for a boundary condition in the 3D physics.

Cumulative Selection

If you want to make the resulting entities that the 2D geometric objects in the work plane consist of contribute to a cumulative selection, select a cumulative selection from the **Contribute to** list (the default, **None**, gives no contribution), or click the **New** button to create a new cumulative selection (see Cumulative Selections).

DRAWING IN THE WORK PLANE

To show the work plane, click the **Show Work Plane** button ( ) in the **Settings** window's toolbar, or click the **Plane Geometry** node that appears under the **Work Plane** node. To create 2D objects in the work plane, right-click the **Plane Geometry** node and create nodes like in a 2D geometry.

EMBEDDING THE WORK PLANE IN THE 3D GEOMETRY

To embed the 2D work plane geometry in the 3D geometry, build the Work Plane feature by either right-clicking the **Work Plane** node and choosing **Build Selected** or selecting the **Work Plane** node and then clicking **Build Selected** or **Build All Objects**.

Using Work Planes

CREATING 3D GEOMETRIES FROM 2D WORK PLANES AND 3D FACES

In addition to creating 3D geometries directly using 3D geometric primitives, it is also possible to form 3D geometries based on 2D sections (2D geometries) created in work planes or faces in the existing 3D geometry. A *work plane* is a 2D plane oriented anywhere in the 3D space. Quick options make it easy to create a work plane that is parallel to any of the main Cartesian planes or to a face or edge in an existing 3D geometry.

There are several methods to create 3D solid objects from 2D sections or faces. In addition, you can use a 2D section as an "embedded" surface in the 3D geometry.

	Drawing on a work plane works just as drawing in 2D. The 3D work plane adapts its size to the drawn geometry.

	See *Electric Sensor* (Application Library path **COMSOL_Multiphysics/Electromagnetics/electric_sensor**). Use the instructions to practice building the geometry, which includes **Work Plane**, **Rectangle**, **Ellipse**, **Union**, **Compose**, **Extrude**, and **Block** features.

DRAWING ON A 2D WORK PLANE IN 3D

When using a **Work Plane** ( ) node to define 2D objects in 3D (for example, to extrude into a 3D object), the 3D projection settings enable you to draw on the work plane in 3D. These instructions provide an example. When the **View work plane geometry in 3D** check box is selected in the **Settings** window for the Plane Geometry node ( ) under the **Work Plane** node, two additional buttons are available in the **Graphics** window — the **Align with work plane** button ( ) and the **Work plane clipping** button ( ). The standard 2D geometry draw toolbar is also available for use.

	Some computer graphic cards cannot run the work plane rendering. In these cases, the work plane is rendered as a blue plane. It is possible to go to the 3D work plane but not to draw on the plane.

1 Add a 3D **Component** and then add a geometry (for example, a **Sphere**).

2 In the **Geometry** toolbar, click **Work Plane** (or right-click **Geometry 1** and select **Work Plane**.

3 Under **Work Plane** click the **Plane Geometry** node.

4 Under **Visualization**, select the **View work plane geometry in 3D** check box. See Figure 7-4 and Figure 7-5 to see what happens when the check box is selected.

5 The geometry displays in the **Graphics** window. See Figure 7-5 for an example.

- Click the **Align with work plane** button ( ) to rotate and move the camera to see the work plane from the top down.
- Click to toggle the **Work plane clipping** button ( ) on and off. When on, use it to cut away all geometries above the work plane and make it easier to draw when objects are overlapping within the work plane. The clipping is not done when looking at the work plane from the side.

6 Under **In-plane visualization of 3D geometry,** specify how to visualize 3D objects in the work plane (as blue curves and points) by selecting one or more of the following check boxes (all of them are selected by default):

- **Coincident entities (blue)** — Show edges and points (in a pure blue color) that lie in the work plane.
- **Intersection (cyan)** — Show the intersection of 3D geometry and the work plane (in cyan).
- **Projection (light blue)** — Show the projection of all edges and points onto the work plane (in light blue).

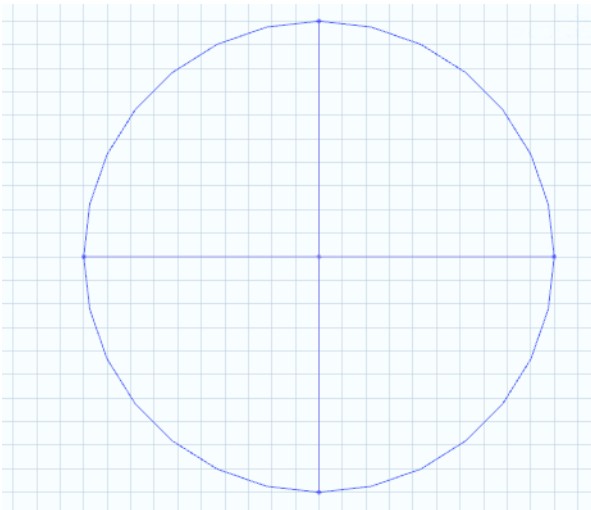

Figure 7-4: The Graphics window displaying the Work Plane Geometry when the View work plane geometry in 3D check box is not selected.

7

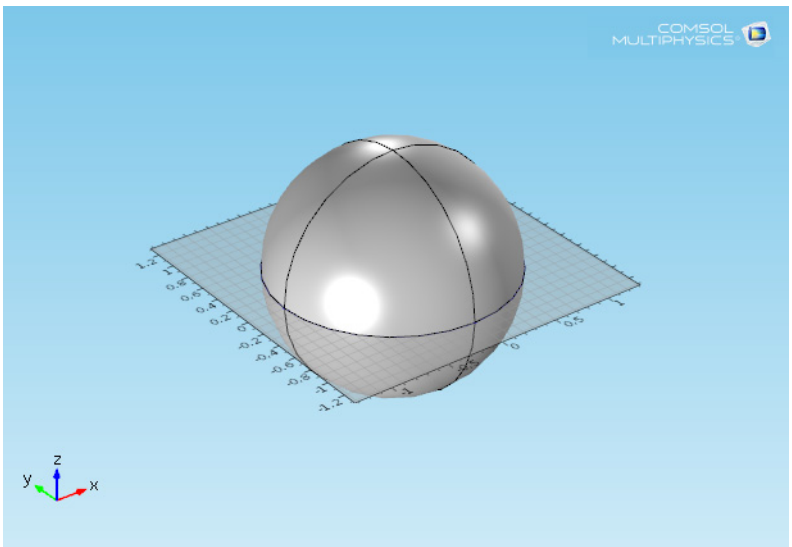

Figure 7-5: The Graphics window displaying the Work Plane Geometry with the View work plane geometry in 3D check box selected.

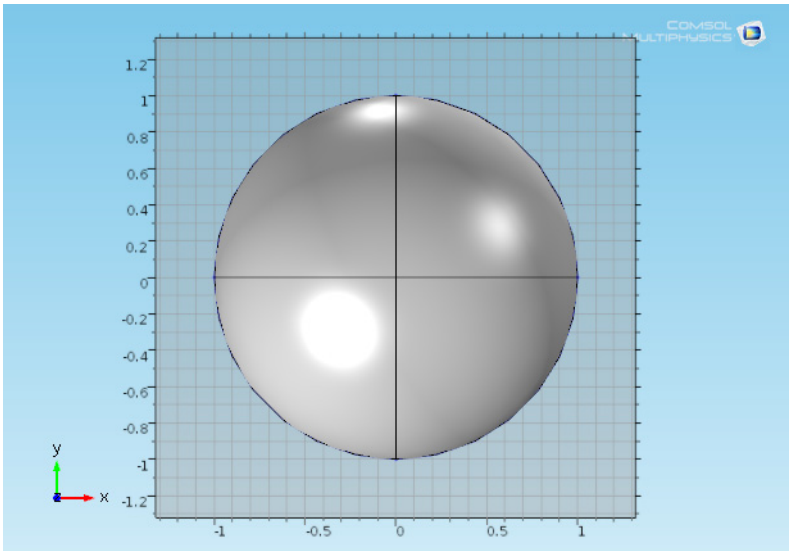

Figure 7-6: Click the Align with Work Plane button to display the geometry from the top down.

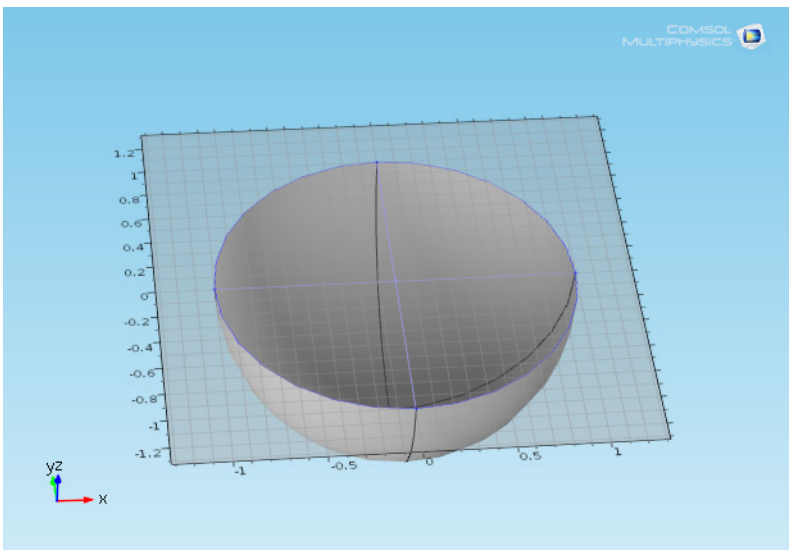

Figure 7-7: Click to turn on the Work Plane Clipping button and cut away all geometries above the work plane.

Virtual Geometry and Mesh Control Operations

	Forming Composite Edges and Faces by Ignoring Vertices and Edges and Merging Vertices by Collapsing Edges

VIRTUAL GEOMETRY OPERATIONS

For a 2D or 3D geometry you can add *virtual geometry operations* after the **Form Union/Assembly** node to, for example, remove small details from the geometry and to prepare it for efficient meshing and analysis. The geometry sequence before the **Form Union/Assembly** node defines the "real" (original) geometry. The geometry resulting from a virtual operation is referred to as a *virtual geometry*.

	Use the **Remove Details** feature to automatically remove small details from the geometry.

These virtual operations are available from the **Geometry** toolbar, **Virtual Operations** menu ( ):

TABLE 7-12: VIRTUAL OPERATIONS FOR 2D AND 3D MODELS

ICON	NAME	DESCRIPTION
	Remove Details	Removed details from the geometry automatically or by adding virtual subfeatures.
	Ignore Edges	Virtually remove isolated edges or edges adjacent to precisely two faces or between two domains
	Ignore Faces	Virtually remove isolated faces or faces between two domains (3D only)
	Ignore Vertices	Virtually remove isolated vertices or vertices adjacent to precisely two edges
or	Form Composite Domains	Form virtual composite domains from sets of connected domains by ignoring the boundaries between the domains in each set
	Form Composite Edges	Form virtual composite edges from sets of connected edges by ignoring the vertices between the edges in each set
	Form Composite Faces	Form virtual composite faces from sets of connected faces by ignoring the edges between the faces in each set (3D only)
	Collapse Edges	Virtually collapse each edge into a vertex by merging its adjacent vertices
	Collapse Faces	Virtually collapse faces into edges or vertices by merging their adjacent opposite edges or collapsing all adjacent edges
	Collapse Face Regions	Virtually detect and collapse regions of faces narrower than a specified size
	Merge Edges	Virtually merge opposite edges adjacent to a face
	Merge Vertices	Virtually merge one adjacent vertex of an edge with the other adjacent vertex

MESH CONTROL OPERATIONS

The following mesh control operations are available from the **Geometry>Virtual Operations** menu ( ) and can be used to include ignored geometric entities for mesh control purposes to, for example, make it possible to use a mapped mesh:

TABLE 7-13: MESH CONTROL OPERATIONS

ICON	NAME	DESCRIPTION
	Mesh Control Domains	To select domains for mesh control only.
	Mesh Control Edges	To use isolated edges, or edges adjacent to precisely two domains (in 2D) or two faces (in 3D), only for mesh control.
	Mesh Control Faces	To use isolated faces, or faces between two 3D domains, only for mesh control.
	Mesh Control Vertices	To use isolated vertices, or vertices adjacent to precisely two edges, only for mesh control.

Collapse Edges

To virtually collapse edges into vertices, in the **Geometry** toolbar, from the **Virtual Operations** menu ( ), select **Collapse Edges** ( ). Then enter the properties of the operation using the following sections:

INPUT

Select the edges that you want to collapse in the Graphics window. They then appear in the **Edges to collapse** list. If the geometry sequence includes user-defined selections above the **Collapse Edges** node, choose **Manual** to select edges, or choose one of the selection nodes from the list next to **Edges to collapse**.

Click the **Active** button to toggle between turning ON and OFF the **Edges to collapse** selections.

Select the **Ignore merged vertices** check box to ignore the resulting merged vertices (if possible).

The operation collapses an edge by removing it, merging its adjacent vertices to the vertex with lowest index, and reconnecting the adjacent edges to the *merged vertex*.

The operation collapses the edges in the selection where no other edge shares the same adjacent vertices (unless this is in the selection).

Collapse Faces

To virtually collapse faces into edges or vertices, in the **Geometry** toolbar, from the **Virtual Operations** menu ( ), select **Collapse Faces** ( ). Then enter the properties of the operation using the following sections:

INPUT

Select the faces that you want to collapse in the **Graphics** window. They then appear in the **Faces to collapse** list. If the geometry sequence includes user-defined selections above the **Collapse Faces** node, choose **Manual** to select faces, or choose one of the selection nodes from the list next to **Faces to collapse**.

Click the **Active** button to toggle between turning ON and OFF the **Faces to collapse** selections.

The operation collapses a face by removing it, merging its adjacent opposite edges or collapsing all adjacent edges, and reconnecting the adjacent faces to the resulting merged edges.

Select the **Ignore merged entities** check box to ignore the resulting merged edges or vertices (if possible).

By default, the **Collapse to vertex tolerance** list is set to **Automatic**. Select **Manual** to enter a value in the **Maximum face perimeter** field that appears. The default values is 0.001. This tolerance is the maximum perimeter of a face to be collapsed into a vertex.

Collapse Face Regions

To automatically detect and collapse regions of faces narrower than a specified size, in the **Geometry** toolbar, from the **Virtual Operations** menu ( ), select **Collapse Face Regions** ( ). You can also select it from the **Geometry** node's context menu's **Virtual Operations** submenu. Such narrow regions of faces can cause unwanted mesh refinement or even meshing failure. The collapse face regions operation determines narrow regions of a face and then collapses those resulting sliver faces.

Enter the properties of the operation using the following sections:

INPUT

Select the faces for which you want to collapse narrow face regions in the **Graphics** window. They then appear in the **Faces** list. If the geometry sequence includes user-defined selections above the **Collapse Face Regions** node, choose **Manual** to select faces, or choose one of the selection nodes from the list next to **Faces**.

Click the **Active** button to toggle between turning ON and OFF the **Faces** selections.

By default, the **Narrow regions tolerance** list is set to **Automatic**. Select **Manual** to enter a value in the **Maximum width** field that appears. The tolerance is the maximum width of a face region to be considered as narrow. If you build the operation with **Automatic** and then switch to **Manual**, the **Maximum width** field shows the value of the parameter that was used when the operation was built.

Form Composite Domains

To form virtual composite domains, in the **Geometry** toolbar, from the **Virtual Operations** menu ( ), select **Form Composite Domains** (or). Then enter the properties of the operation using the following sections:

INPUT

Select the domains that you want to composite in the **Graphics** window. They then appear in the **Domains to composite** list. If the geometry sequence includes user-defined selections above the **Form Composite Domains** node, choose **Manual** to select domains, or choose one of the selection nodes from the list next to **Domains to composite**.

Click the **Active** button to toggle between turning ON and OFF the **Domains to composite** selections.

Use the **Ignore adjacent vertices** (2D) or **Ignore adjacent edges and vertices** (3D) check box to specify if the operation also removes the ignorable vertices (and edges in 3D) on the boundary of each resulting composite domain.

The operation forms a composite domain for each connected domain component of the selected domains by ignoring the boundaries between the domains.

MESH CONTROL

Use the **Keep input for mesh control** check box to specify that the selected domains are composed in the geometry but are available individually when you build the mesh. This gives you more control of the meshing. A well partitioned geometry is more efficient to mesh and can, for example, make it possible to create a high quality hexahedral mesh through the sweep operations.

Form Composite Edges

To form virtual composite edges, in the **Geometry** toolbar, from the **Virtual Operations** menu ( ), select **Form Composite Edges** ( ). Then enter the properties of the operation using the following sections:

INPUT

Select the edges that you want to composite in the **Graphics** window. They then appear in the **Edges to composite** list. If the geometry sequence includes user-defined selections above the **Form Composite Edges** node, choose **Manual** to select edges, or choose one of the selection nodes from the list next to **Edges to composite**.

Click the **Active** button to toggle between turning ON and OFF the **Edges to composite** selections.

The operation forms a composite edge for each connected edge component (of manifold type) of the selected edges by ignoring the vertices between the edges. However, it does not ignore vertices when that would introduce closed or periodic composite edges.

MESH CONTROL

Use the **Keep input for mesh control** check box to specify that the selected edges are composed in the geometry but are available individually when you build the mesh.

Form Composite Faces

To form virtual composite faces, in the **Geometry** toolbar, from the **Virtual Operations** menu ( ), select **Form Composite Faces** ( ). Then enter the properties of the operation using the following sections:

INPUT

Select the faces that you want to composite in the **Graphics** window. They then appear in the **Faces to composite** list. If the geometry sequence includes user-defined selections above the **Form Composite Faces** node, choose **Manual** to select faces, or choose one of the selection nodes from the list next to **Faces to composite**.

Click the **Active** button to toggle between turning ON and OFF the **Faces to composite** selections.

Use the **Ignore adjacent vertices** check box to specify if the operation also removes the ignorable vertices on the boundary of each resulting composite face.

The operation forms a composite face for each connected face component (of manifold type) of the selected faces by ignoring the edges between the faces.

MESH CONTROL

Use the **Keep input for mesh control** check box to specify that the selected faces are composed in the geometry but are available individually when you build the mesh.

Ignore Edges

To remove isolated edges or edges adjacent to precisely two domains or two faces from the geometry, in the **Geometry** toolbar, from the **Virtual Operations** menu ( ), select **Ignore Edges** ( ). Then enter the properties of the operation using the following sections:

INPUT

Select the edges that you want to ignore in the **Graphics** window. These then appear in the **Edges to ignore** list. If the geometry sequence includes user-defined selections above the **Ignore Edges** node, choose **Manual** to select edges, or choose one of the selection nodes from the list next to **Edges to ignore**.

Click the **Active** button to toggle between turning ON and OFF the **Edges to ignore** selections.

Use the **Ignore adjacent vertices** check box to specify if the operation also removes the ignorable start and end vertices of the edges.

The operation removes the selected edges that are isolated or that are adjacent to precisely two faces or are between two domains.

MESH CONTROL

Use the **Keep input for mesh control** check box to specify that the selected edges disappear from the geometry but become available when you build the mesh. You can, for example, use *mesh control edges* to control the element size inside a domain or to partition the geometry to use a mapped mesh. See also Mesh Control Edges.

Ignore Faces

	This operation is available for 3D models only.

To remove isolated faces or faces between two domains from the geometry, in the **Geometry** toolbar, from the **Virtual Operations** menu ( ), select **Ignore Faces** ( ). Then enter the properties of the operation using the following sections:

INPUT

Select the faces that you want to ignore in the **Graphics** window. They then appear in the **Faces to ignore** list. If the geometry sequence includes user-defined selections above the **Ignore Faces** node, choose **Manual** to select faces, or choose one of the selection nodes from the list next to **Faces to ignore**.

Click the **Active** button to toggle between turning ON and OFF the **Faces to ignore** selections.

Use the **Ignore adjacent vertices and edges** check box to specify if the operation also removes the ignorable vertices and edges adjacent to the faces.

The operation removes the selected faces that are isolated or that are between two domains.

MESH CONTROL

Use the **Keep input for mesh control** check box to specify that the selected faces disappear from the geometry but become available when you build the mesh. You can, for example, use a *mesh control face* to partition the geometry to make it possible to sweep a hexahedral mesh. See also Mesh Control Faces.

Ignore Vertices

To remove isolated vertices or vertices adjacent to two edges only from the geometry, in the **Geometry** toolbar, from the **Virtual Operations** menu ( ), select **Ignore Vertices** ( ). Then enter the properties of the operation using the following sections:

INPUT

Select the vertices (points) that you want to ignore in the **Graphics** window. These then appear in the **Vertices to ignore** list. If the geometry sequence includes user-defined selections above the **Ignore Vertices** node, choose **Manual** to select vertices, or choose one of the selection nodes from the list next to **Vertices to ignore**.

Click the **Active** button to toggle between turning ON and OFF the **Vertices to ignore** selections.

The operation removes the selected vertices that are isolated or that are adjacent to precisely two edges. However, it does not remove vertices if that would introduce closed or periodic *composite edges*.

MESH CONTROL

Use the **Keep input for mesh control** check box to specify that the selected vertices disappear from the geometry but become available when you build the mesh. You can, for example, use a *mesh control vertex* to control the element size inside a domain. See also Mesh Control Vertices.

Merge Edges

To virtually merge opposite edges adjacent to a face, in the **Geometry** toolbar, from the **Virtual Operations** menu ( ), select **Merge Edges** ( ). Then enter the properties of the operation using the following sections:

EDGES TO KEEP

Select the edges that you want to keep in the **Graphics** window. They then appear in the **Edges to keep** list.

Click the **Active** button to toggle between turning ON and OFF the **Edges to keep** selections.

EDGES TO REMOVE

Select the edges that you want to remove in the **Graphics** window. They then appear in the **Edges to remove** list. Click the **Active** button to toggle between turning ON and OFF the **Edges to remove** selections.

The operation merges the opposite edges by collapsing the face between the edges and reconnecting the faces adjacent to the removed edges to the resulting merged edges.

Merge Vertices

To virtually merge one vertex adjacent to an edge with the other adjacent vertex, in the **Geometry** toolbar, from the **Virtual Operations** menu ( ), select **Merge Vertices** ( ). Then enter the properties of the operation using the following sections:

VERTEX TO KEEP

Select the vertex that you want to keep in the **Graphics** window. It then appears in the **Vertex to keep** list.

Click the **Active** button to toggle between turning ON and OFF the **Vertex to keep** selections.

VERTEX TO REMOVE

Select the vertex that you want to remove in the **Graphics** window. It then appears in the **Vertex to remove** list. Click the **Active** button to toggle between turning ON and OFF the **Vertex to remove** selections.

The operation merges the two vertices by collapsing the edge between the vertices and reconnecting the edges adjacent to the removed vertex to the resulting merged vertex.

Mesh Control Domains

To use a domain only for mesh control, in the **Geometry** toolbar, from the **Virtual Operations** menu ( ), select **Mesh Control Domains** ( ). Then enter the properties of the operation using the following sections:

INPUT

Select the domains that you want to use for mesh control in the Graphics window. They then appear in the **Domains to include** list. If the geometry sequence includes user-defined selections above the **Mesh Control Domains** node, choose **Manual** to select domains, or choose one of the selection nodes from the list next to **Domains to include**.

Click the **Active** button to toggle between turning ON and OFF the **Domains to include** selections.

The operation removes the selected domains by composing them with adjacent domains. The faces (3D only) and edges in between are removed from the geometry but become available when you build the mesh. You can, for example, use a *mesh control domain* to partition the geometry to make it possible to sweep a hexahedral mesh.

Mesh Control Edges

To use isolated edges, or edges adjacent to precisely two domains (in 2D) or two faces (in 3D), only for mesh control, in the **Geometry** toolbar, from the **Virtual Operations** menu ( ), select **Mesh Control Edges** ( ). Then enter the properties of the operation using the following sections:

INPUT

Select the edges that you want to use for mesh control in the **Graphics** window. They then appear in the **Edges to include** list. If the geometry sequence includes user-defined selections above the **Mesh Control Edges** node, choose **Manual** to select edges, or choose one of the selection nodes from the list next to **Edges to include**.

Click the **Active** button to toggle between turning ON and OFF the **Edges to include** selections.

Use the **Include adjacent vertices** check box to specify if the operation also include the ignorable start and end vertices of the edge.

The operation removes the selected edges that are isolated or that are adjacent to precisely two faces (in 3D) or two domains (in 2D). The edges are removed from the geometry but become available when you build the mesh. You can, for example, use a *mesh control edge* to control the element size inside a domain or to partition the geometry to make use of a mapped mesh.

Ignore Edges

Mesh Control Faces

To use isolated faces, or faces between two 3D domains, only for mesh control, in the **Geometry** toolbar, from the **Virtual Operations** menu ( ), select **Mesh Control Faces** ( ). Then enter the properties of the operation using the following sections:

INPUT

Select the faces that you want to use for mesh control in the **Graphics** window. They then appear in the **Face to include** list. If the geometry sequence includes user-defined selections above the **Mesh Control Faces** node, choose **Manual** to select faces, or choose one of the selection nodes from the list next to **Faces to include**.

Click the **Active** button to toggle between turning ON and OFF the **Faces to include** selections.

Use the **Include adjacent vertices and edges** check box to specify if the operation also includes the ignorable vertices and edges adjacent to of the faces.

The operation removes the selected faces that are isolated or that are between two domains. The faces are removed from the geometry but become available when you build the mesh. You can, for example, use a *mesh control face* to partition the geometry to make it possible to sweep a hexahedral mesh.

Ignore Faces

Mesh Control Vertices

To use isolated vertices, or vertices adjacent to precisely two edges, only for mesh control, in the **Geometry** toolbar, from the **Virtual Operations** menu ( ), select **Mesh Control Vertices** ( ). Then enter the properties of the operation using the following sections:

INPUT

Select the vertices (points) that you want to use for mesh control in the **Graphics** window. They then appear in the **Vertices to include** list. If the geometry sequence includes user-defined selections above the **Mesh Control Vertices** node, choose **Manual** to select vertices, or choose one of the selection nodes from the list next to **Vertices to include**.

Click the **Active** button to toggle between turning ON and OFF active **Vertices to include** selections.

The operation removes the selected vertices that are isolated or that are adjacent to precisely two edges. However, it does not remove vertices if that would introduce closed or periodic *composite edges*. The selected vertices are removed from the geometry but become available when you build the mesh. You can, for example, use a *mesh control vertex* to control the element size inside a domain.

	Ignore Vertices

Remove Details

From the **Virtual Operations** menu in the context menu when right-clicking a 3D **Geometry** node or directly from the **Geometry** ribbon toolbar, choose **Remove Details** ( ) to add a node with settings for automatically remove small details from the geometry. Small details include short edges and small and narrow (sliver) faces, which may complicate the meshing and make the model more difficult to solve. The **Settings** window contains the following sections:

AUTOMATION

The default in the **Mode of operation** list is **Automatic**. Typically, use the automatic mode first. The **Remove Details** operation generates and builds a local sequence of virtual operations. You can then switch to **Manual** if needed to inspect the added virtual operations and fine-tune and add more such operations. When you have built the **Remove Details** node and the **Mode of operation** list is set to **Manual**, the created virtual operations are available as subnodes to the **Remove Details** node. Alternatively, right-click the **Remove Details** node and choose **Edit Generated Sequence** ( ). You can also then right-click the **Remove Details** node to add more virtual operations. If you want to restore the generated sequence of virtual operations, choose **Reset to the Generated Sequence** ( ) from the **Remove Details** node's context menu.

The following sections are only available when the **Mode of operation** list is set to **Automatic**.

ENTITIES TO PROCESS

The default is to remove small details from the entire geometry. From the **Entities** list, choose **Selection** instead of **Entire geometry** to make a selection of entities for which you want to remove small details.

If you choose **Selection**, the **Geometric entity level** list appears with the options **Domain** (the default), **Boundary**, and **Edge**. If the geometry sequence includes user-defined selections, you can choose one of them from the **Selection** list; otherwise, or if you choose **Manual** from the **Selection** list, select entities from the **Graphics** window or by pasting selections into the list of selected entities.

DETAILS TO REMOVE

This section contains the following check boxes that specifies what type of repair issues to address:

- **Vertices with continuous tangent**. This check box controls whether each vertex that is adjacent to two edges with C1 continuity across the vertex, and that is not isolated in any face, is ignored.
- **Short edges**
- **Small faces**

- **Sliver faces**
- **Thin domains**. When this check box is selected, the software automatically removes domains with a thickness less than the specified detail size (see below).

	Not all types of details to remove are always applicable, depending on the chosen geometric entity level. For example, the **Thin domains** check box is only applicable if the selection is the entire geometry or a domain selection.

All check boxes are selected by default. When the remove details operation has finished, information about the number of removed details appears in the table under **Information**.

PARAMETERS

In this section you can control the parameters that determine the size of details to remove.

From the **Detail size** list, choose **Automatic** (the default), **Relative**, or **Absolute**. If you choose **Relative** the **Maximum relative size** field appears (default value: 0.001). If you select **Absolute**, the **Maximum absolute size** field appears (default value: 0.001 times the size of the geometry's bounding box). When you build this feature, the **Maximum relative size** and the **Maximum absolute size** are set to the values that are used, which can be useful when you have set **Detail size** to **Automatic**.

The values in the **Continuous tangent tolerance** field (default value: 5 degrees) specifies the maximum allowed angular tangent deviation across a vertex or edge to be ignored.

INFORMATION

This section contains information about the removed details: In the **Type of removal** column, the types of details that have been removed are listed. In the **Removed entities** column, the number of entities for each type of remove operation is listed.

Click **Build Selected** ( ) (or press F7) to build the geometry up to and including this node, click **Build Preceding** ( ) (or press F6) to build the geometry up to the node preceding this node, or click **Build All** ( ) (or press F8) to build all nodes in the geometry sequence.

Geometry Modeling Examples

Creating a 2D Geometry Model

This section describes how to build a 2D cross section of a heat sink and introduces 2D geometry operations in COMSOL Multiphysics.

Assume that you want to estimate the maximum amount of heat dissipated by a heat sink placed around a resistor for high-power applications. The heat sink consists of an extruded aluminum profile as in Figure 7-8. If the effects at the ends of the elongated heat sink are neglected, the model can be simplified and a decent estimate obtained of the heat dissipated by creating a 2D cross section.

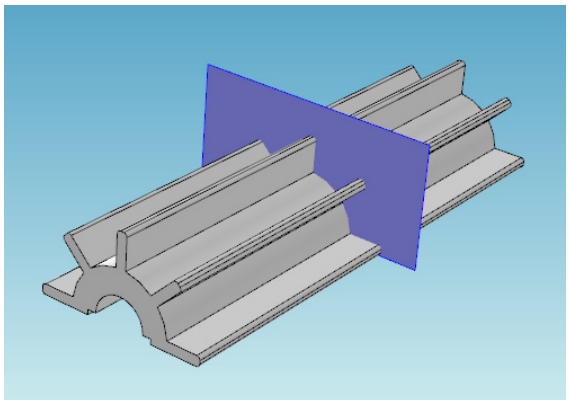

Figure 7-8: Example of a 3D heat sink model with cross section.

CREATING A BASIC 2D GEOMETRY MODEL

1 Double-click the COMSOL Multiphysics icon to launch COMSOL.

2 Add a **2D Component**, either when Creating a New Model or adding The Component Node.

CREATING PARAMETERS FOR GEOMETRY PARAMETERIZATION

The following steps explain how to create two circles to form the core of the heat sink in Figure 7-8. To investigate different dimensions of the heat sink, parameterize the geometry. Start by defining the radius of the outer arc of the heat sink, the radius of the inner arc, and the thickness and the length of the heat sink flanges.

	See Toolbars and Keyboard Shortcuts for links and information about all the available toolbars. Also see The COMSOL Desktop Menus and Toolbars. It is also useful to review Working with Geometric Entities and Creating Named Selections before continuing with these instructions.

1 In the **Home** toolbar, click **Parameters** (P_i).

2 In the **Parameters** table, enter, or copy and paste the values in the table below. The **Value** column automatically displays the **Expression** value.

NAME	EXPRESSION	DESCRIPTION
R1	5[mm]	Radius circle 1
R2	2.5[mm]	Radius circle 2

NAME	EXPRESSION	DESCRIPTION
d	1[mm]	Height
L	5[mm]	Width

ADDING TWO CIRCLES WITH PREDEFINED PARAMETERS

1 Under **Component 1**, right-click the **Geometry 1** node and choose **Circle** ( ).

2 On the **Settings** window for **Circle** under **Size and Shape**, enter R1 in the **Radius** field.

3 Click the **Build Selected** button ( ).

A circle (c1) with radius R1 displays in the **Graphics** window.

4 Add another circle. Right-click **Geometry 1** and select **Circle** ( ).

5 On the **Settings** window for **Circle** under **Size and Shape**, enter R2 in the **Radius** field.

6 Click the **Build Selected** button ( ).

A circle with radius R2 displays in the **Graphics** window. Click the **Zoom Extents** button ( ) to see both circles.

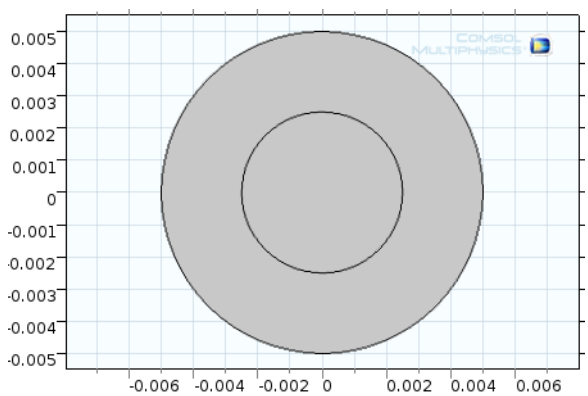

SUBTRACTING THE SMALLER CIRCLE

1 In the **Geometry** toolbar, from the **Booleans and Partitions** menu, select **Difference** ( ).

2 In the **Settings** window, under **Difference**, the **Active** button is **On** ( ) by default. It activates the **Objects to add** list for choosing objects.

3 In the **Graphics** window, click to select object **c1** (the larger circle). c1 is added to the **Objects to add** list.

4 Under **Objects to subtract** click the **Active** button to toggle and activate this section.

5 Select the object c2 (the smaller circle). This can be done by clicking it in the **Graphics** window. Or open the **Selection List** window (from the **Home** toolbar, **More Windows>Selection List**) and right-click **c2 (solid)** to **Add to Selection**.

6 Click the **Build Selected** button ( ). The object **dif1** is created by subtracting the smaller circle from the larger circle.

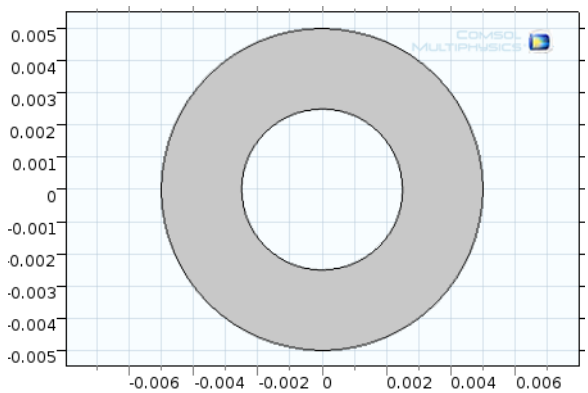

INTERSECTING WITH RECTANGLE

1 Under **Component 1**, right-click the **Geometry 1** node and choose **Rectangle** ( ).

2 On the **Settings** window for **Rectangle**, under **Size**:

   a In the **Width** field enter `2*R1`, and in the **Height** field, enter `R1`.

   b Under **Position**, enter `-R1` in the **x** field.

3 Click the **Build Selected** button ( ).

   The interaction operation creates the object `r1` (not related to the circle radius), which coincides with the intersecting area of the two input objects.

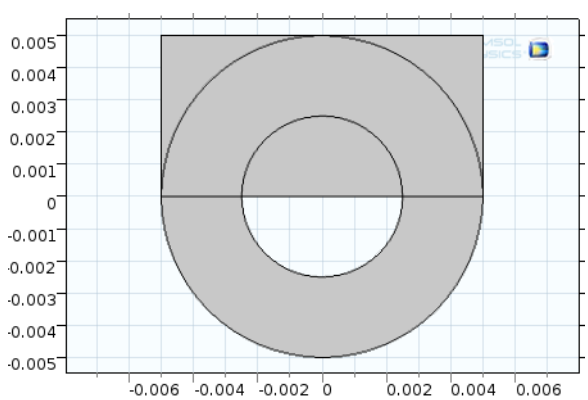

4 Click the **Geometry 1** node. In the **Geometry** toolbar, from the **Booleans and Partitions** menu, select **Intersection** ( ).

5 In the **Graphics** window click to select each object — `dif1` (the combined circle) and `r1` (the rectangle).

   After each click, the object is added to the **Input Objects** list.

6 Click the **Build Selected** button ( ) to create the object `int1`.

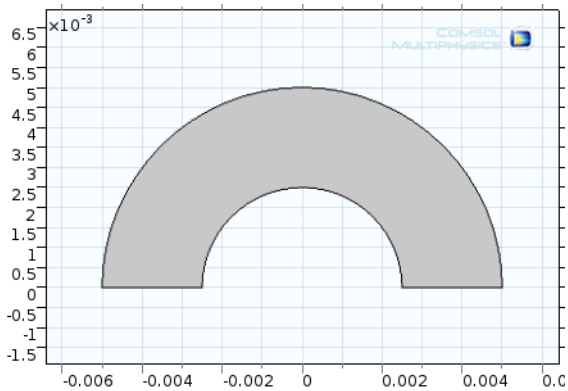

ADDING A RECTANGLE TO CREATE A FLANGE

1 Right-click the **Geometry 1** node and choose **Rectangle** ( ).

2 On the **Settings** window for **Rectangle** under **Size**:

   a In the **Width** field, enter `L`.

   b In the **Height** field, enter `d`.

3 Under **Position**, in the **x** field enter `-(2/3*R1+L)`, and in the **y** field enter `-d/2`.

4 Click the **Build Selected** button ( ). On the **Graphics** window toolbar, click the **Zoom Extents** button ( ).

   The object `r2` (not related to the circle radius) is created. Next, round the sharp edges of the flange by using fillets.

ADDING A FILLET TO ROUND THE FLANGE EDGES

1 In the **Geometry** toolbar, from the **Booleans and Partitions** menu, select **Fillet** ( ).

2 On object `r2` (the small rectangle) click each vertex (**1** and **4**, located in the left-hand corners, highlighted in blue the figure) to add these to the selection lists.

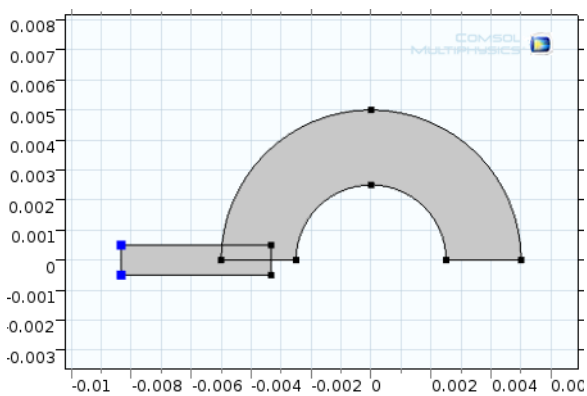

3 On the **Settings** window for **Fillet** under **Radius**, enter `d/3` in the **Radius** field.

4 Click the **Build Selected** button ( ) to create object `fil1`.

ADDING ROTATE OPERATIONS TO CREATE FIVE FLANGES

Rotate the flange 45 degrees and keep the original input object to create five flanges on top of the heat sink.

Adding Rotate 1 to Create Object Rot1

1 In the **Geometry** toolbar, from the **Transforms** menu, select **Rotate** ( ).

2 In the **Graphics** window, click to select object `fil1` (the filleted rectangle). It is added to the **Input objects** list.

3 On the **Settings** window for **Rotate** under **Input**, select the **Keep input objects** check box.

4 Under **Rotation Angle**, enter `-45 -90 -135 -180` in the **Rotation** field.

5 Click **Build Selected** ( ) to create the object `rot1`. Click **Zoom Extents**( ).

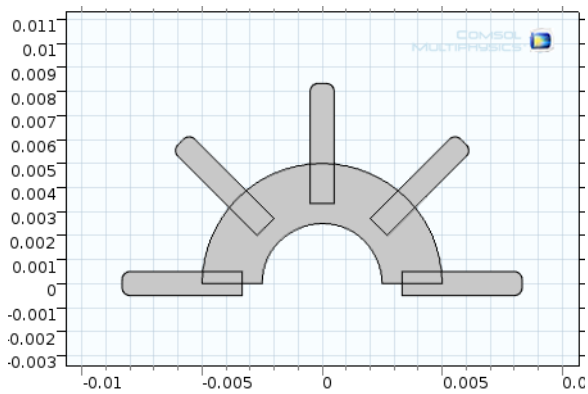

REMOVING INTERIOR BOUNDARIES IN UNION OPERATIONS

1 In the **Geometry** toolbar, from the **Booleans and Partitions** menu, select **Union** ( ).

2 In the **Graphics** window click the objects `int1`, `fil1`, `rot1(1)`, `rot1(2)`, `rot1(3)`, and `rot1(4)`. These are added to the **Input objects** section (or click the **Select All** button ( ) in the **Graphics** toolbar).

3 In the **Settings** window for **Union**, click to clear the **Keep interior boundaries** check box to remove the interior boundaries in the union operation. This is good practice if these boundaries do not define separate parts with different materials, for example.

4 Click the **Build All Objects** button ( ). Click the **Zoom Extents** button ( ). The final geometry is shown in Figure 7-9.

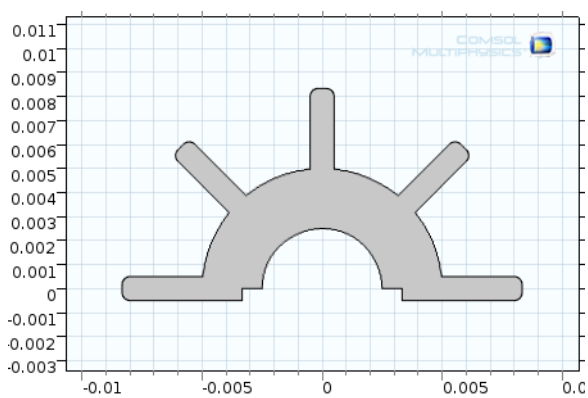

Figure 7-9: Final 2D object created in the Model Builder.

VIEWING THE GEOMETRY SEQUENCE

Figure 7-10 shows the geometry sequence used to create Figure 7-9. All primitive objects and the fillet operation are parameterized through the radius of the inner and outer heat sink arcs, the length and thickness of the flanges, and the radius of the fillets. You can change the parameter values in the **Parameters** table or for any object to create alternative heat sink geometries. The sequence still remains, and when you click the **Build All** button ( ), a new geometry is created.

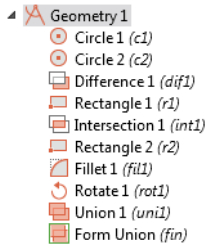

Figure 7-10: An example of a 2D geometry sequence.

RE-RUNNING THE GEOMETRY SEQUENCE WITH DIFFERENT PARAMETERS

1 In the **Home** toolbar, click **Parameters** (P_i) (or click the **Parameters** node under **Global Definitions**).

2 In the **Settings** window under **Parameters**, enter these settings in the table. Replace the previous data:.

NAME	EXPRESSION	VALUE	DESCRIPTION
R1	4[mm]	0.0040 m	Radius Circle 1
R2	2.5[mm]	0.0025 m	Radius Circle 2
d	1[mm]	0.0010 m	Height
L	7[mm]	0.0070 m	Width

3 In the **Model Builder** click **Geometry 1**.

4 Click the **Build All** button ( ). Click the **Zoom Extents** button ( ) to view the geometry as defined by the new parameters.

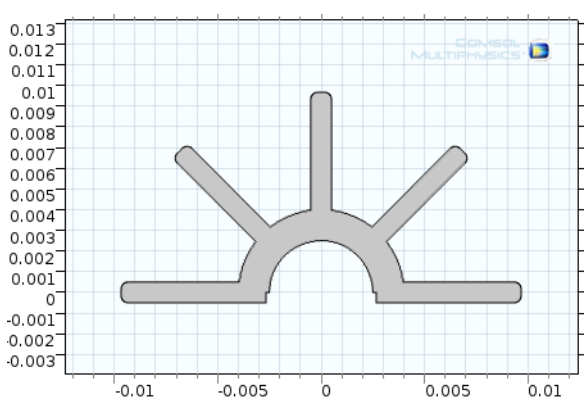

Creating a 3D Geometry Model

Figure 7-11 shows the geometry of a heat sink used for cooling microprocessors. The following sections describe the steps to create this geometry and introduces 3D drawing tools and techniques.

	See Toolbars and Keyboard Shortcuts for links and information about all the available toolbars. Also see The COMSOL Desktop Menus and Toolbars. It is also useful to review Working with Geometric Entities and Creating Named Selections before continuing with these instructions.

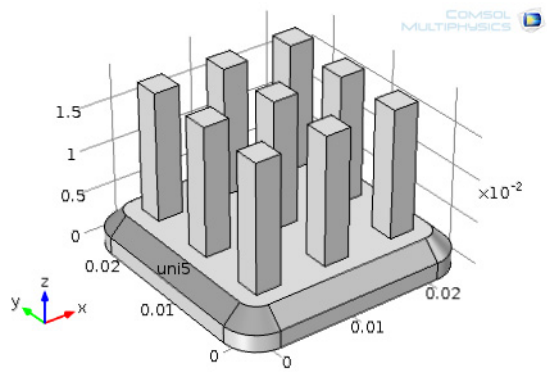

Figure 7-11: Example of a 3D heat sink geometry.

CREATING A BASIC 3D GEOMETRY COMPONENT

1 Double-click the COMSOL Multiphysics icon to launch COMSOL.

2 Add a **3D Component**, either when Creating a New Model or adding The Component Node.

CREATING PARAMETERS FOR GEOMETRY PARAMETERIZATION

1 In the **Home** toolbar click **Parameters** (P_i).

2 In the **Settings** window, in the **Parameters** table, enter these settings:

NAME	EXPRESSION	VALUE	DESCRIPTION
L1	1.5e-2	0.015	Pillar thickness (in the heat sink)
L2	3e-3	0.0030	Pillar length (in the heat sink)

USING WORK PLANES TO CREATE A BÉZIER POLYGON

Use work planes to create 2D geometries that you can extrude or revolve to create 3D objects.

Work Plane and Using Work Planes

Creating a Bézier Polygon

1 In the **Geometry** toolbar click **Work Plane** ( ).

2 In the **Settings** window for **Work Plane** under **Plane Definition**, select **xz-plane** from the **Plane** list.

3 Under the **Work Plane 1** node, right-click **Plane Geometry** and add a **Bézier Polygon** ( ) (or click **Plane Geometry** and on the **Work Plane** toolbar from the **Primitives** menu, select **Bézier Polygon**).

4 In the **Settings** window for **Bézier Polygon** under **Polygon Segments**, click **Add Linear**.

Segment 1 (linear) displays in the **Added segments** list.

5 Under **Control points**: In row **1**, enter -2e-3 in the **xw** field, and in row **2**, enter –4e-3 in the **xw** field.

6 Click **Add Linear** to add **Segment 2 (linear)** to the **Added segments** list. Some of the **Control points** are automatically filled in with values; the control points from the previous line are already filled in as the starting points for the next line.

7 Under **Control points**, in row **2**, enter 2e-3 in the **yw** field.

8 Click **Add Linear** to add **Segment 3 (linear)** to the **Added segments** list.

9 In the **xw** field for row **2**, enter -2e-3. In the **yw** field for row **2**, enter 4e-3.

10 Click **Add Linear** to add **Segment 4 (linear)** to the **Added segments** list.

11 Under **Control points** in the **yw** field for row **2**, enter `0`.

12 Click **Close Curve**, then click the **Build Selected** button ( ) and the **Zoom Extents** button ( ).

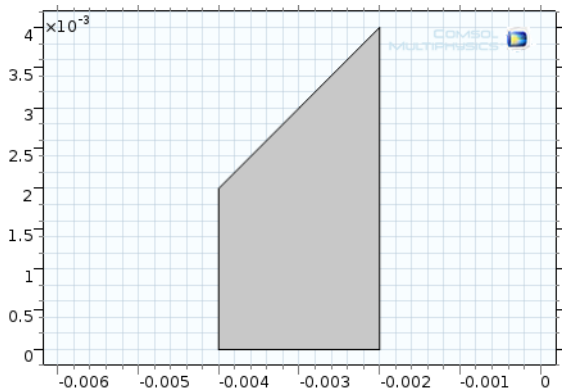

REVOLVING A 2D OBJECT TO CREATE A 3D OBJECT

1 Click the **Geometry 1** node. In the **Geometry** toolbar, click **Revolve** ( ).

The **Settings** window for **Revolve** opens and the 2D Bézier Polygon displays in the **Graphics** window.

2 In the **Settings** window for **Revolve** under **Revolution Angles**, enter `90` in the **End angle** field (replace the default).

	The **Revolution Axis** corresponds to the position of the *y*-axis in the work plane's 2D coordinate system.

3 Under **General**, click to clear the **Unite with input objects** check box. **Work Plane 1** is required for the next steps.

4 Click the **Build Selected** button ( ) and the **Zoom Extents** button ( ) to view the object **rev1**.

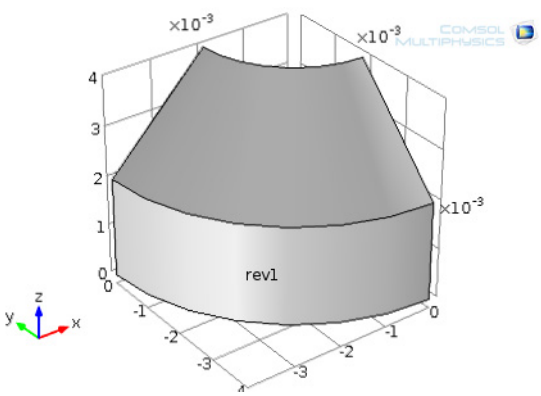

ADDING AN EXTRUSION AND UNION

1 In the **Geometry** toolbar, click **Extrude** ( ).

2 In the **Settings** window, under **Distances from Plane**, enter `-2e-2` in the **Distances** row.

3 Click the **Build Selected** button ( ) and the **Zoom Extents** button ( )to view the object **ext1**.

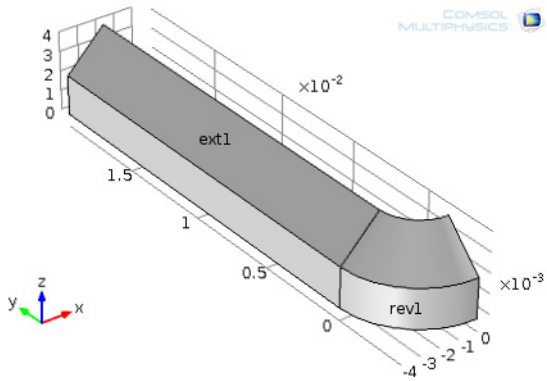

4 In the **Geometry** toolbar, from the **Booleans and Partitions** menu, select **Union** ( ).

5 In the **Graphics** window, click to select the objects **rev1** and **ext1** and add them to the **Input objects** section.

6 In the **Settings** window under **Union**, click to clear the **Keep interior boundaries** check box to remove the interior boundary between the corner section and the edge section.

7 Click the **Build Selected** button ( ). Objects **rev1** and **ext1** are combined to create object **uni1**.

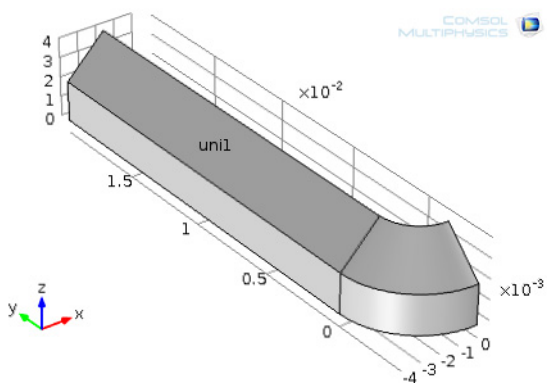

ADDING A ROTATION TO THE 3D OBJECT

1 Click **Geometry 1** and in the **Geometry** toolbar, from the **Transforms** menu, select **Rotate** ( ).

2 Select the object **uni1** and add it to the **Input objects** section under **Input**.

3 Select the **Keep input objects** check box to leave the input object intact as a rotation of the object is created.

4 Under **Rotation Angle**, enter `-90` in the **Rotation** field.

5 Under **Point on Axis of Rotation**: In the **x** field, enter `1e-2`, and in the **y** field, enter `1e-2`.

6 Click the **Build Selected** button ( ) and the **Zoom Extents** button ( ) to view the object **rot1**.

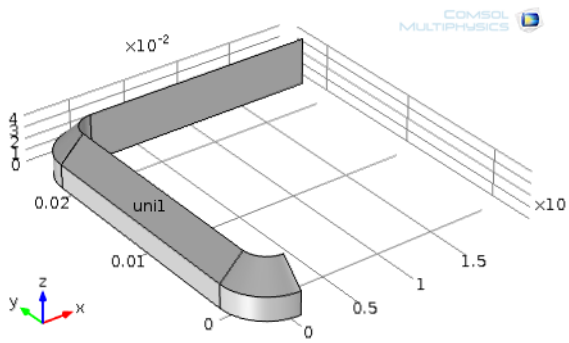

CREATING UNION 2

1 In the **Geometry** toolbar, from the **Booleans and Partitions** menu, select **Union** ( ).

2 In the **Graphics** window click to select the objects **uni1** and **rot1** and add them to the **Input objects** section under **Union**.

3 Click to clear the **Keep interior boundaries** check box.

4 Click the **Build Selected** button ( ) to create object **uni2**.

ADDING A SECOND ROTATION

1 In the **Geometry** toolbar, from the **Transforms** menu, select **Rotate** ( ).

2 In the **Graphics** window, click to select the object **uni2** and add it to the **Input objects** section under **Input**.

3 In the **Settings** window for **Rotate**, click to select the **Keep input objects** check box.

4 Under **Rotation Angle**, enter `-180` in the **Rotation** field.

5 Under **Point on Axis of Rotation**: In the **x** field, enter `1e-2`, and in the **y** field, enter `1e-2`.

6 Click the **Build Selected** button ( ).

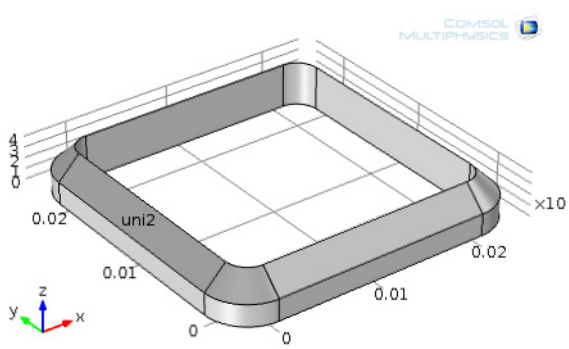

CREATING UNION 3

1 In the **Geometry** toolbar, from the **Booleans and Partitions** menu, select **Union** ( ).

2 In the **Graphics** window, click to select the objects **uni2** and **rot2** and add them to the **Input objects** section under **Union**.

3 Click to clear the **Keep interior boundaries** check box.

4 Click the **Build Selected** button ( ) to create object **uni3**.

CREATING WORK PLANE 2 AND ADDING A SQUARE

1 In the **Geometry** toolbar, click **Work Plane** ( ). A **Work Plane 2** node is added to the **Model Builder**.

2 Click the **Build Selected** button ( ).

3 In the **Settings** window for **Work Plane 2**, in the upper-left corner, click the **Show Work Plane** button ( ). Use the projection of the 3D geometry on the *xy*-plane as a guide for creating the middle section of the heat sink base.

4 In the **Model Builder**, under **Work Plane 2**, right-click **Plane Geometry** and select **Square** ( ).

5 In the **Settings** window for **Square** under **Size**, enter `2.4e-2` in the **Side length** field.

6 Under **Position**, select **Center** from the **Base** list. Then in the **xw** field, enter `1e-2`, and in the **yw** field, enter `1e-2`.

7 Click the **Build Selected** button ( ) and the **Zoom Extents** button ( ).

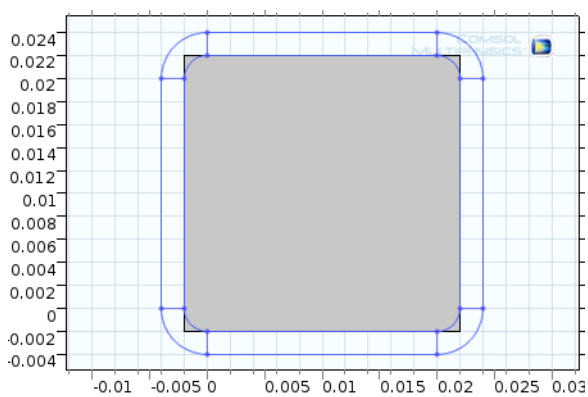

TRIMMING THE SQUARE TO FIT USING THE FILLET OPERATION

1 Under **Work Plane 2**, click the **Plane Geometry** node.

2 In the Work Plane Modal Toolbar, click **Fillet** ( ).

3 In the **Graphics** window click to add points 1, 2, 3, and 4 on the object **sq1** to the **Vertices to fillet** section under **Points**.

4 Under **Radius**, enter `2e-3` in the **Radius** field.

5 Click the **Build Selected** button.( ).

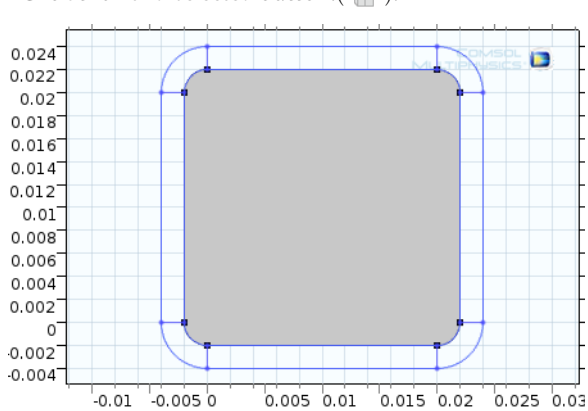

ADDING EXTRUDE 2 AND COMBINING OBJECTS TO COMPLETE THE BASE

1 Click the **Geometry 1** node. Then in the **Geometry** toolbar, click **Extrude** ( ).

2 In the **Settings** window for **Extrude** under **Distances from Plane**, enter `4e-3` in the **Distances** row.

3 Click the **Build Selected** button ( ).

4 In the **Geometry** toolbar, from the **Booleans and Partitions** menu, select **Union** ( ).

5 In the **Graphics** window, click to select the objects **uni3** and **ext2** to add to the **Input objects** section.

6 Click the **Build Selected** button ( ) to create object **uni4**. This completes the base of the heat sink.

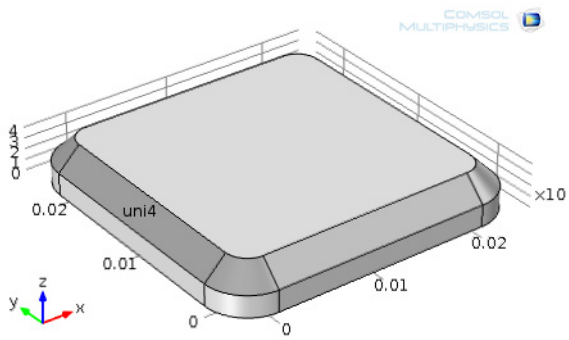

DRAWING THE UPPER PART OF THE HEAT SINK

Creating a Work Plane and a Square

1 In the **Geometry** toolbar, click **Work Plane** ( ). A **Work Plane 3** node is added to the **Model Builder**.

2 In the **Settings** window, under **Plane Definition**, enter `4e-3` in the **z-coordinate** field.

3 Click the **Plane Geometry** node under **Work Plane 3**. In the **Settings** window, the check boxes **Coincident entities**, **Intersection**, and **Projection** are selected by default. This visualizes the projected edges of the heat sink's base in the work plane.

4 In the **Settings** window for **Work Plane**, click the **Build Selected** button ( ).

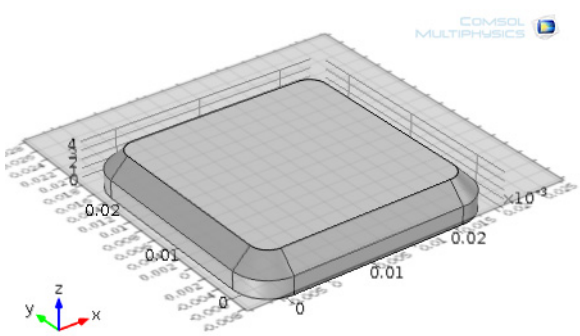

5 In the **Settings** window, click the **Show Work Plane** button ( ).

6 In the **Model Builder**, under **Work Plane 3**, right-click **Plane Geometry** and select **Square** ( ).

7 Under **Size**, enter `L2` in the **Side length** field.

8 Click the **Build Selected** button ( ) to create square **sq1** with side length L2.

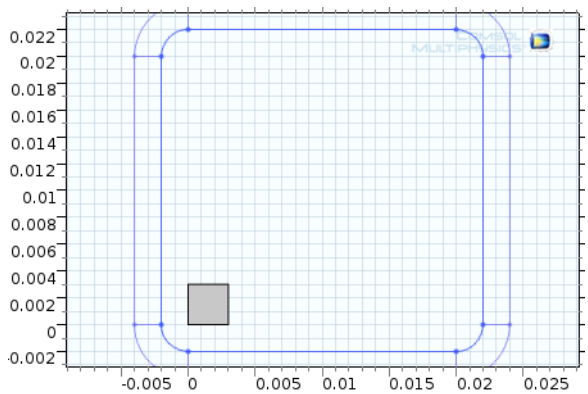

ADDING AN ARRAY OF PILLARS

1 Under **Work Plane 3** click **Plane Geometry**. On the **Work Plane** toolbar, from the **Transforms** menu, select **Array** ( ).

2 Add the object **sq1** to the **Input objects** section under **Input**.

3 Under **Size**, in the **xw size** field, enter `3`, and in the **yw size** field, enter `3`.

4 Under **Displacement**, in the **xw** field, enter `1e-2-L2/2`, and in the **yw** field, enter `1e-2-L2/2`.

5 Click the **Build Selected** button ( ).

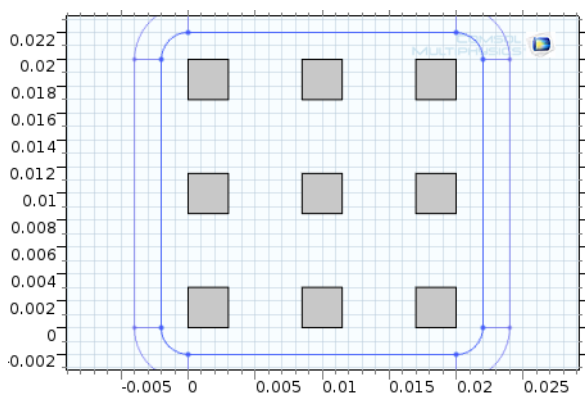

Adding Extrude 3 and Combining Objects (Union)

1 Click the **Geometry 1** node. Then in the **Geometry** toolbar, click **Extrude** ( ).

2 In the **Settings** window for **Extrude** under **Distances from Plane**, enter `L1` in the **Distances** row.

3 Click the **Build Selected** button ( ) and the **Zoom Extents** button ( ).

4 In the **Geometry** toolbar, from the **Booleans and Partitions** menu, select **Union** ( ).

5 In the **Graphics** toolbar, click the **Select All** button ( ) to add all the objects (`uni4` and all the `ext3` just built) to the **Input objects** list under **Union**.

6 Click the **Build All Objects** button ( ) to complete the heat sink geometry as in Figure 7-11.

The upper part of the heat sink is parameterized through the thickness and height of the heat sink pillars. You can edit the parameter values defined previously to change the heat sink geometry.

RE-RUNNING THE GEOMETRY SEQUENCE WITH DIFFERENT PARAMETERS

1 In the **Home** toolbar, click **Parameters** (P_i).

2 In the **Settings** window under **Parameters** enter the following settings in the table. Replace the previous data:

NAME	EXPRESSION	VALUE	DESCRIPTION
L1	1.2e-2	0.012	Pillar thickness (in the heat sink)
L2	2e-3	0.0020	Pillar length (in the heat sink)

3 In the **Model Builder**, click **Geometry 1**.

4 Click the **Build All** button ( ) and the **Zoom Extents** button ( ) to view the geometry as defined by the new parameters.

Forming Composite Edges and Faces by Ignoring Vertices and Edges

This example of how to use virtual geometry operations shows how to use the Ignore Vertices operation (or the Form Composite Edges operation) to remove a very short edge and how to use the Ignore Edges operation (or the Form Composite Faces operation) to prepare the geometry for swept meshing.

GEOMETRY 1

1 Add a **3D Component**, either when Creating a New Model or adding The Component Node.

2 In the **Home** toolbar, click **Import** ( ).

3 In the **Settings** window under **Import**, select **COMSOL Multiphysics file** from the **Geometry import** list.

4 Click **Browse**.

5 In the COMSOL installation directory navigate to the folder `applications/COMSOL_Multiphysics/Tutorials` and double-click `virtualgeom_demo_1.mphbin`.

> The location of the file varies based on the installation. For example, if the installation is on your hard drive, the file path might be similar to `C:\Program Files\COMSOL\COMSOL55\Multiphysics\applications` (in Windows).

6 Click **Import**. In the **Home** toolbar, click **Build All** ( ).

The imported geometry displays in the **Graphics** window.

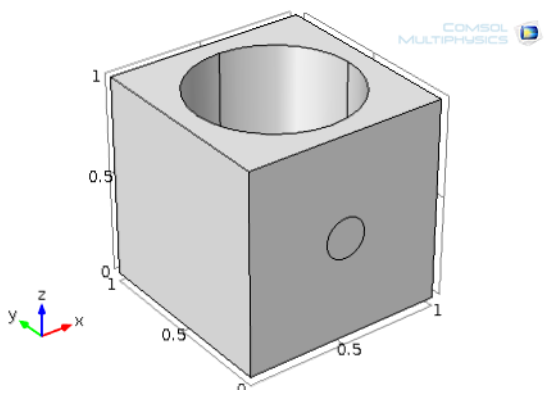

MESH 1

In the **Model Builder**, click the **Mesh** node. In the **Mesh** toolbar, click **Build All** ( ).

The resulting mesh displays in the **Graphics** window.

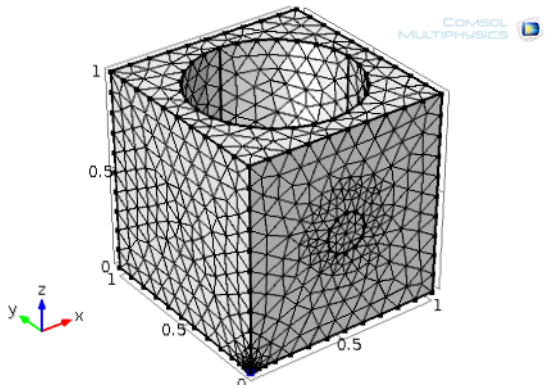

	A **Warning** node ( ) is added under **Mesh 1** indicating that there is a very short edge in the geometry. Use the **Zoom Box** button ( ) and the **Zoom to Selected** button ( ) in the **Graphics** toolbar to locate this edge.

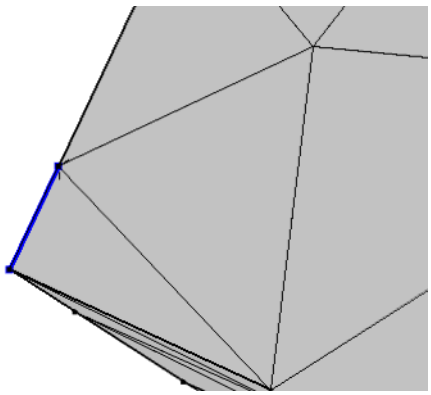

Eliminate the short edge by ignoring the vertex between this edge and its adjacent longer edge.

GEOMETRY 1

Ignore Vertices 1

1 In the **Geometry** toolbar, from the **Virtual Operations** menu, select **Ignore Vertices** ( ).

2 In the **Graphics** window click to select Point 3.

3 Click **Build Selected** ( ).

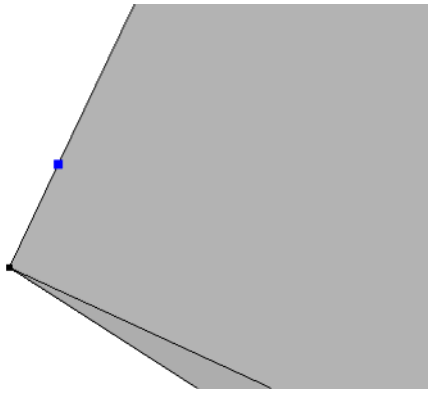

MESH 1

In the **Model Builder**, click **Mesh 1** and in the **Settings** window, click **Build All** ( ). The mesh displays in the **Graphics** window.

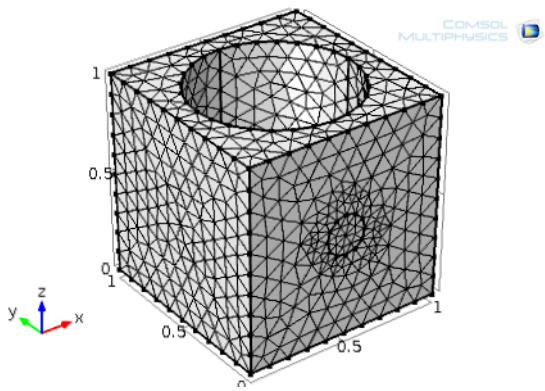

The geometry's domain is well suited for swept meshing.

Swept 1

1 In the **Mesh** toolbar, click **Swept** ( ).

2 In the **Settings** window for **Swept**, click to expand the **Source Faces** section.

3 The **Active** button is by default. In the **Graphics** window click to select Boundary 3. Or click the **Paste** button ( ) and enter 3.

4 Click to expand the **Destination Faces** section. The **Active** button is by default. Click to select Boundary 4.

Size

1 In the **Model Builder**, click the **Size** node ( ).

2 In the **Settings** window for **Size** under **Element Size**, choose **Finer** from the **Predefined** list.

3 Click the **Build All** button ( ).

4 A **COMSOL Error** window opens indicating it **Failed to create swept mesh for domain**. Click **OK** to close the window. The COMSOL Multiphysics software fails to create a swept mesh due to the circular imprint on one of the linking faces of the sweep.

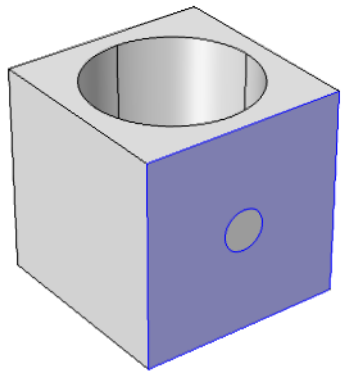

Use the Ignore Edges operation to remove this imprint.

GEOMETRY 1

Ignore Edges 1

1 In the **Geometry** toolbar, from the **Virtual Operations** menu, select **Ignore Edges** ( ).

2 In the **Graphics** window, select Edges 14 and 15. Or click the **Paste** button and enter `14,15`.

The **Ignore adjacent vertices** check box is selected by default so that the vertices of the imprint disappear as well.

3 Click the **Build Selected** button ( ).

MESH 1

Click the **Mesh 1** node and click **Build All** ( ) in the **Settings** window.

The swept mesh displays in the **Graphics** window.

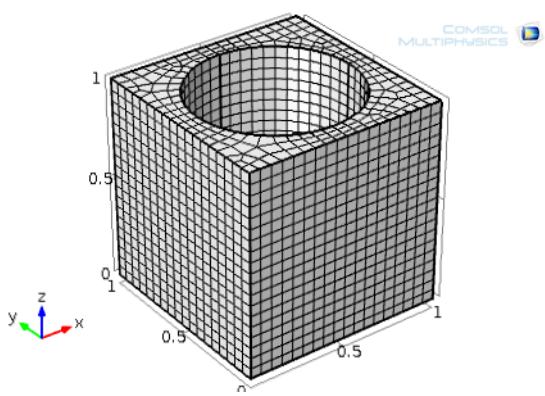

	You can achieve the same virtual geometry using Form Composite Edges and Form Composite Faces operations.

GEOMETRY 1

Disable

1 In the **Model Builder**, right-click **Ignore Edges 1** and choose **Disable** ( ).

2 Click **Ignore Vertices 1** and press F3. This also applies the **Disable** command.

Form Composite Edges 1

1 In the **Geometry** toolbar, from the **Virtual Operations** menu, select **Form Composite Edges** ( ).

2 Select Edges 2 and 6.

3 Click the **Build Selected** button ( ).

Form Composite Faces 1

1 In the **Geometry** toolbar, from the **Virtual Operations** menu, select **Form Composite Faces** ( ).

2 Select Boundaries 2 and 8.

3 Click the **Build Selected** button ( ).

MESH 1

Click the **Mesh 1** node and click **Build All** ( ) in the **Settings** window.

Merging Vertices by Collapsing Edges

This example of virtual geometry operations illustrates how you can use the Collapse Edges operation (or the Merge Vertices operation) to prepare the geometry for efficient meshing.

GEOMETRY 1

1 Add a **3D** Component, either when Creating a New Model or adding The Component Node.

2 In the **Home** toolbar, click **Import** ( ).

3 In the **Settings** window for **Import**, under the **Import** section, click **Browse**.

4 In the COMSOL installation directory, navigate to the folder `applications/COMSOL_Multiphysics/Tutorials` and double-click `virtualgeom_demo_2.mphbin`.

	The location of the file varies based on the installation. For example, if the installation is on your hard drive, the file path might be similar to `C:\Program Files\COMSOL\COMSOL55\Multiphysics\applications` (in Windows).

5 Click **Import**.

The imported geometry displays in the **Graphics** window.

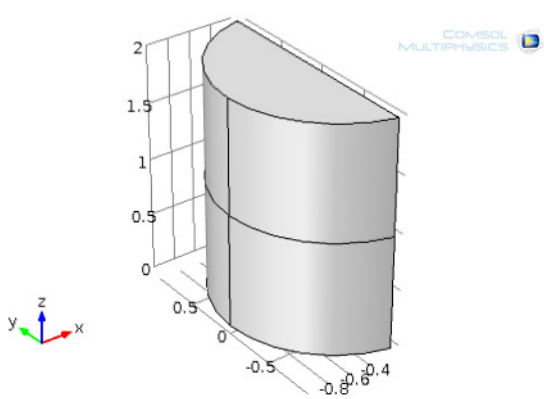

GEOMETRY 1

In the **Model Builder** click **Mesh 1**. In the **Settings** window, click **Build All** ( ).

The resulting mesh displays in the **Graphics** window.

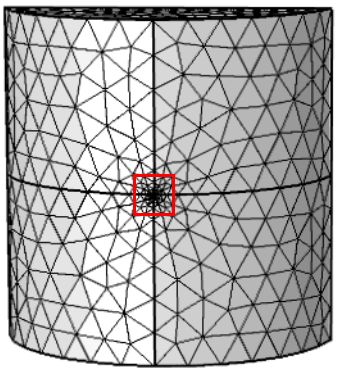

The figure shows that the mesh is very fine in the region marked by the red box. To zoom into this region, click the **Geometry 1** node in the **Model Builder**. In the **Graphics** window, click the **Zoom In** button ( ) and zoom into this region. You can then see the reason for the fine mesh. There is a very short edge at the junction of the four curved faces.

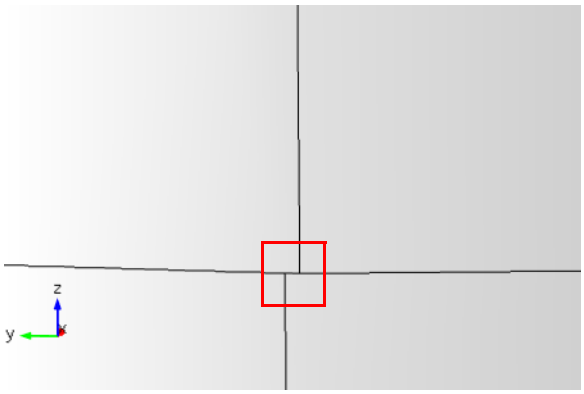

Remove this short edge by collapsing it into a vertex.

Collapse Edges 1

1 In the **Geometry** toolbar, from the **Virtual Operations** menu, select **Collapse Edges** ( ).

2 Select Edge 4.

3 Click the **Build Selected** button ( ).

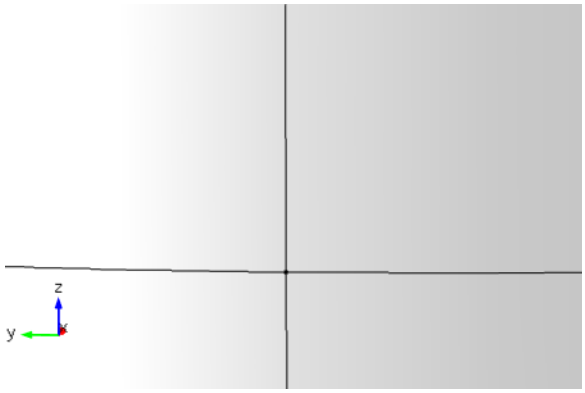

	You can also remove this short edge with an Ignore Edges operation forming a composite face of the two adjacent faces. However, then the small distance between the vertices of the ignored edge remains.

MESH 1

In the **Model Builder**, click **Mesh 1**. In the **Settings** window, click **Build All** ( ). The mesh displays in the **Graphics** window. Click the **Go to View** button ( ) in the **Graphics** window.

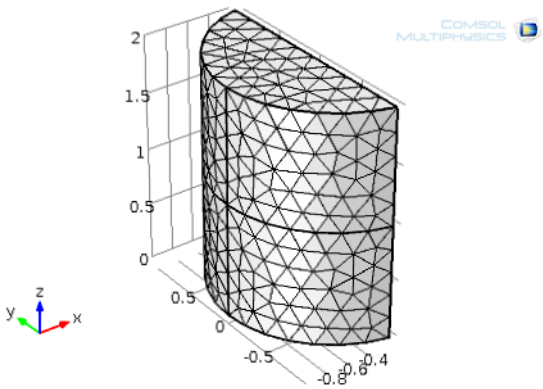

	You can achieve the same virtual geometry using a Merge Vertices operation.

GEOMETRY 1

Right-click **Collapse Edges 1** and choose **Disable** ( ).

Merge Vertices 1

1 In the **Geometry** toolbar, from the **Virtual Operations** menu, select **Merge Vertices** ( ).

2 Select Point 2.

3 Go to the **Settings** window for **Merge Vertices**. Locate the **Vertex to Remove** section and select Point 3.

4 Click the **Build Selected** button ( ).

MESH 1

In the **Model Builder** click **Mesh 1**. In the **Settings** window, click **Build All** ( ).

8

Meshing

This chapter describes meshing capabilities, meshing techniques, and meshing operations available for meshing the geometry.

In this chapter:

- Creating a Mesh for Analysis
- Meshing Techniques
- Meshing Operations and Attributes
- Importing and Exporting Meshes
- Meshing Examples

Creating a Mesh for Analysis

- Meshing Concepts
- Mesh Elements for 1D, 2D, and 3D Geometries
- Free (Unstructured) Meshing
- Structured Meshes
- About Swept Meshes
- Mesh Control Entities
- The Mesh Toolbar
- Adding, Editing, and Building Meshing Sequences
- Using Mesh Parts
- Mesh Part Settings
- Meshes Generated by Adaptation
- The Mesh Statistics Window

Meshing Concepts

The **Mesh** ( ) nodes enable the discretization of the geometry into small units of simple shapes, referred to as *mesh elements*.

A mesh is the result of building a meshing sequence. A meshing sequence corresponding to a geometry consists of Meshing Operations and Attributes. The attribute nodes store properties that are used by the operation nodes when creating the mesh.

Building an operation node creates or modifies the mesh on the part of the geometry defined by the operation node's selection. Some of the operation nodes use properties defined by attribute nodes; for example, the Free Tetrahedral node reads properties from the Distribution and Size attribute nodes. If you choose to import a mesh you have access to a different set of operations (see Creating or Modifying Entities of Imported Meshes).

For some operation nodes, you can right-click to add local attribute nodes as subnodes. Properties defined in local attribute nodes of an operation node override the corresponding properties defined in global attribute nodes (on the same selection).

GLOBAL VS. LOCAL ATTRIBUTE NODES

An attribute node contains properties defined on a selection. You can add an attribute as a node in the meshing sequence (this is referred to as a *global attribute node*) or add it as a node under an operation node (a *local attribute node*). Global attribute nodes are used by operation nodes when building the meshing sequence. Local attribute nodes are only used by the owning operation node.

VISUALIZING THE MESH

The Graphics Window shows the resulting mesh from the nodes that have been built. The result of subsequent nodes is not visible. The last built node becomes the *current node* and appears with a quadratic frame around the node's icon ( ). The frame is green if the node and all preceding nodes are built; that is, the mesh in the Graphics window is up to date. The frame is yellow if the node or some preceding node has been edited since the node was built and needs to be rebuilt ( ).

Mesh Element Numbering Conventions in the *COMSOL Multiphysics Programming Reference Manual*.

1D GEOMETRIES

The mesh generator discretizes the domains (intervals) into smaller intervals (or mesh elements). The endpoints of the mesh elements are called *mesh vertices*.

The boundaries (or vertices) defined in the geometry are represented in the mesh by *boundary elements* (or *vertex elements*).

2D GEOMETRIES

The mesh generator discretizes the domains into *triangular* or *quadrilateral* mesh elements. If the boundary is curved, these elements represent an approximation of the original geometry. The sides of the triangles and quadrilaterals are called *mesh edges*, and their corners are *mesh vertices*. A mesh edge must not contain mesh vertices in its interior.

The boundaries defined in the geometry are discretized (approximately) into mesh edges, referred to as boundary elements (or *edge elements*), which must conform with the mesh elements of the adjacent domains.

The geometry vertices are represented by vertex elements.

3D GEOMETRIES

The mesh generator discretizes the domains into *tetrahedral*, *hexahedral*, *prism*, or *pyramid* mesh elements whose faces, edges, and corners are called *mesh faces*, *mesh edges*, and *mesh vertices*, respectively.

For 3D meshing, platforms handle floating-point operations differently, which sometimes results in slight differences between identical model files that are generated on two different computers.

The boundaries in the geometry are discretized into triangular or quadrilateral boundary elements. The geometry edges are discretized into edge elements.

Similar to 2D, the geometry vertices are represented by vertex elements.

CONFORMING MESHES

Meshes generated in the COMSOL Multiphysics software are *conforming*. In a *conforming mesh*, the intersection between any two elements in the mesh is a subelement (mesh face, mesh edge, or mesh vertex) of both, or nothing. For geometries of assembly type this definition is only valid for each individual part of the assembly. A

nonconforming mesh, which can be the case for an importing mesh, typically contains “hanging nodes” (see Figure 8-1 below).

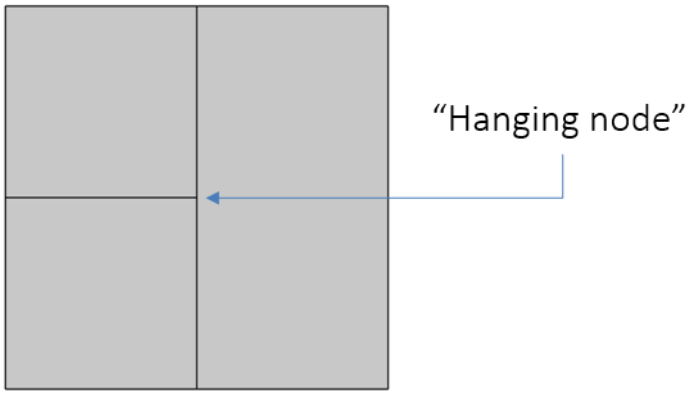

Figure 8-1: A “hanging node” in a nonconforming mesh.

Free (Unstructured) Meshing

The free mesher is available in all space dimensions, and you can use it for all types of geometries regardless of the topology or shape. If you have not defined or generated a mesh, the free mesher automatically creates an unstructured mesh and adds a corresponding node to the Model Builder when a study is computed.

When the free mesher is used:

- The number of mesh elements is determined by the shape of the geometry and various mesh parameters.
- The mesh parameters for the free mesher are controlled by Size and Distribution nodes in the meshing sequences.
- You can also control the size of the mesh elements generated by a specific Free Triangular, Free Quad, or Free Tetrahedral node by adding Size or Distribution subnodes (see Figure 8-2 for the settings in a Size subnode).

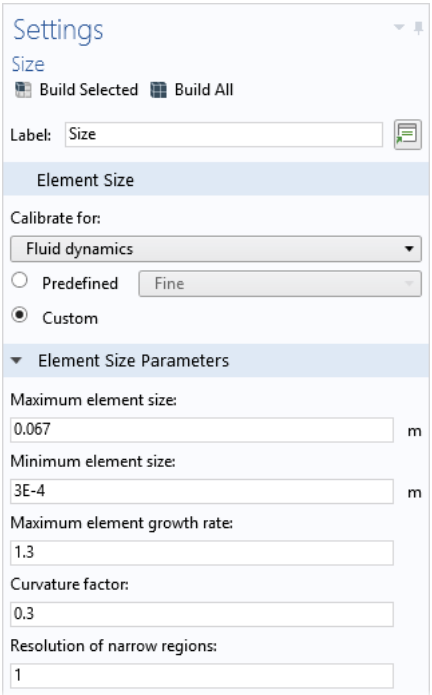

Figure 8-2: An example of custom element mesh sizes. You can also select Predefined element sizes.

	You can define mesh parameters using numerical values, globally defined parameters, and built-in mathematical and physical constants.

2D MODEL UNSTRUCTURED MESHES

Free meshing generates an unstructured mesh with triangular or quadrilateral elements. Use the free mesher in 2D to create an unstructured mesh with triangular or quadrilateral elements. You can combine triangular and quadrilateral meshes by adding domains to the Domain list in the corresponding mesh operation's settings. From here, you can define specific meshing operations to each domain in your model.

3D UNSTRUCTURED MESHES

Free meshing generates an unstructured mesh with tetrahedral elements.

Structured Meshes

2D STRUCTURED MESHES

- You can create a structured triangular mesh by using the Convert operation to introduce a diagonal edge to quadrilateral elements.
- Also see 2D and 3D Boundary Layer Meshes below.
- Mapped meshing generates a structured mesh with quadrilateral elements.

  Compared to an unstructured mesh, the interior mesh vertices in a structured mesh are adjacent to the same number of elements. If you want to use mapped meshing on a geometry, you must build the geometry so that the domains are reasonably "regular" in shape and do not contain holes.

3D STRUCTURED MESHES

- Swept meshing generates a structured mesh (at least in the direction of the sweep) with prism or hexahedral elements. See About Swept Meshes.
- Boundary Layers meshing generates structured layers of elements along specific boundaries integrating into an existing structured or unstructured mesh.

2D AND 3D BOUNDARY LAYER MESHES

The meshing type Boundary Layers is an example of a structured mesh. A boundary layer mesh is a mesh with dense element distribution in the normal direction along specific boundaries. This type of mesh is typically used for fluid flow problems in order to resolve the thin boundary layers along the no-slip boundaries.

- In 2D, a layered quadrilateral mesh is used along the specified no-slip boundaries.
- In 3D, the boundary layer mesh is a layered prism mesh or a hexahedral mesh, depending on whether the corresponding boundary-layer boundaries contain a triangular or quadrilateral mesh.

Boundary layer meshes can also resolve large temperature gradients close to heated surfaces subjected to sudden changes over time.

	If you have the CFD Module or the Heat Transfer Module, *Heat Sink* shows the introduction of a boundary layer mesh at the surfaces of the inner half-circle arc.

About Swept Meshes

A Swept mesh is an example of a semistructured mesh since it is structured in the sweep direction and can be either structured or unstructured orthogonally to the sweep direction. The swept mesher operates on a 3D domain by meshing or reusing an existing mesh on a source face, and then sweeping the resulting face mesh along the domain to an opposite destination face. The swept mesh is typically a hexahedral mesh (hex mesh) or a prism mesh.

You can use several connected faces as source faces. Also the destination can consist of several faces, as long as each destination face corresponds to at least one source face and each source face corresponds to exactly one destination face. Each face about a domain that is to be operated on by the swept mesher is classified as either a source face, a destination face, or a linking face. The linking faces are the faces linking the source and destination faces (see Figure 8-3). The swept mesher can handle domains with multiple linking faces in the sweep direction.

The linking edges are the edges, or the chains of edges, connecting the source and destination faces. For a domain to be possible to sweep, there must be at least one linking edge or chain of edges.

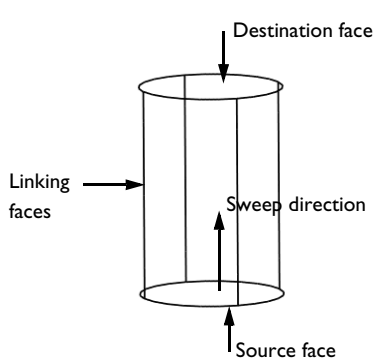

Figure 8-3: Classification of the boundaries about a domain used for swept meshing.

You can specify the source and destination faces manually, but in most cases the swept mesher can automatically identify source and destination faces from the geometry.

- If the source faces are not meshed prior to the sweeping operation, the Swept node automatically creates a quadrilateral (or triangular) mesh before sweeping it to the destination.
- If the source faces contain a triangular mesh, the resulting swept mesh consists of prism elements.
- If the source faces contain a quadrilateral mesh, the resulting swept mesh consists of hexahedral elements (hex elements).

The default is to create a quadrilateral face mesh but, depending on the source faces, that is not always possible.

For the sweeping technique to work, the geometry must satisfy these criteria:

- Each domain must be bounded by one shell; that is, a domain must not contain holes except if they penetrate both the source and destination face.
- The source and destination for a domain must be opposite each another in the domain's topology.
- Each destination face must correspond to one or more source faces.
- Each source face must correspond to precisely one destination face or a subset of it.
- The cross section along the direction of the sweep for a domain must be topologically constant.

Coincident source and destination faces are allowed.

If any of the faces about a domain is meshed prior to the sweeping operation, the following must be fulfilled.

- If the source and destination faces are meshed, these meshes must match.
- Structured quad meshes must be applied to the linking faces.

Swept and Generating a 3D Swept Mesh

Mesh Control Entities

Sometimes it is desirable to use certain geometric entities only to control the mesh. For example, you can add a curve inside a domain to control mesh element size there. If you mark this curve as a mesh control entity, it is not included in the geometry used when defining the physics interface and materials. An advantage is that the final mesh need not respect this curve exactly; it is used only to control element size.

Another situation where mesh control entities are useful is when you need precise control of the mesh in certain regions of the geometry. In these regions you typically use a structured mesh with distribution nodes to control the mesh. In other regions of the geometry you can use free (unstructured) mesh.

Suppose that you also want to insert boundary layers. If the boundaries separating the domains with structured and free mesh are ordinary geometry boundaries, the boundary layers have to respect them. This can lead to various problems, including low-quality elements or even meshing failures. If you instead mark such boundaries as mesh

control entities, the boundary layer mesh algorithm has more freedom to move mesh nodes and to construct a better mesh.

- Using Mesh Control Entities to Control Element Size
- Working with Geometric Entities
- Creating Named Selections

The Mesh Toolbar

- The COMSOL Desktop
- Clear or Delete a Mesh
- Errors and Warnings
- Meshing Operations and Attributes

After a **Mesh** has been added to the Component node, the **Mesh** ribbon toolbar (Windows) or the **Mesh** contextual toolbar (macOS and Linux) is made accessible. Click a meshing sequence node in the **Model Builder** and the **Mesh** tab or toolbar displays on the COMSOL Desktop.

In general, the instructions throughout the documentation indicate that you click a button on a **Mesh** toolbar, no matter what operating system you are running.

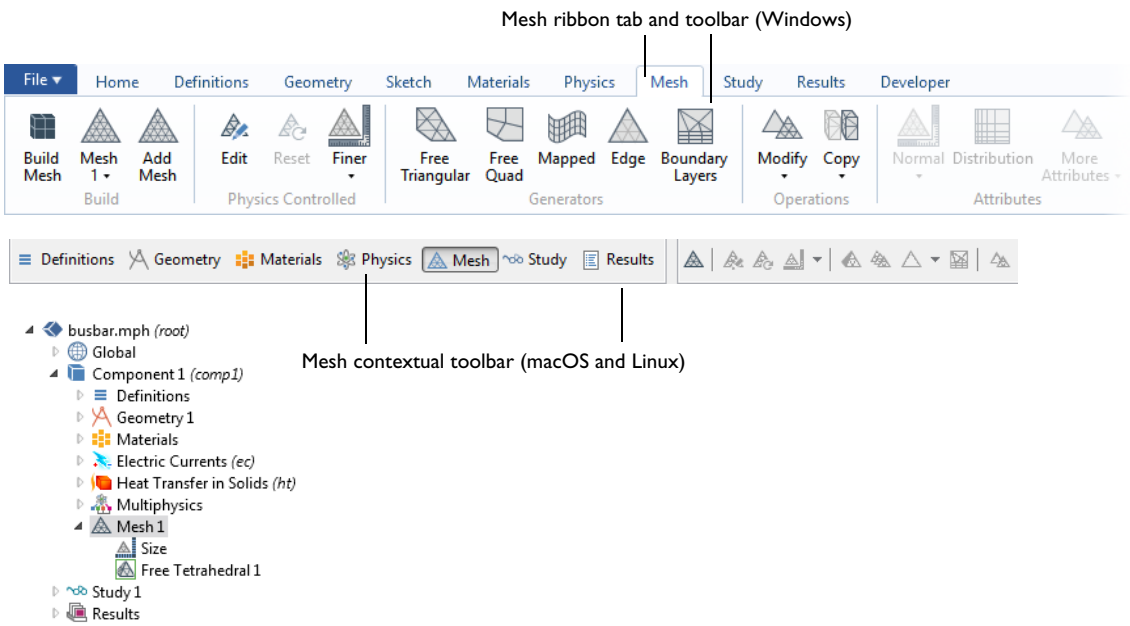

Figure 8-4: Click a Mesh node or any node under the Mesh node (Free Tetrahedral, for example) to open the Mesh ribbon toolbar (Windows users, top) or Mesh contextual toolbar (macOS and Linux users, bottom). Only some of the available buttons are shown in this image.

Click the associated menu arrow and choose the menu item corresponding to the mesh node. If you click the button associated with this menu button COMSOL Multiphysics selects the node in the **Model Builder** corresponding to the last selected item in the menu associated with the menu button.

PREDEFINED MESH ELEMENT SIZES

The following table shows the icons on the drop-down menus for selecting predefined mesh element sizes:

TABLE 8-1: PREDEFINED ELEMENT SIZE ICONS

ICON	NAME	ICON	NAME
	Extremely Fine		Normal
	Extra Fine		Coarse
	Finer		Coarser
	Fine		Extra Coarse
			Extremely Coarse

GEOMETRIC MEASUREMENTS

To measure the volume, area, or length of a selected domain, face, or edge, respectively, click the **Measure** button ( ). The result displays in The Messages Window. Using this button it is also possible to view the coordinates of a vertex, the distance between two vertices, or the number of entities and the geometry representation (only if you have license for the CAD Import Module) of a geometry object.

The Mesh Toolbar in 1D and 2D contains a subset of the tools in the 3D toolbar.

Adding, Editing, and Building Meshing Sequences

When you add a new Component to the Model Builder, a meshing sequence is added by default in the node **Mesh 1**. You can add more meshing sequences to the Component by right-clicking the **Component** node and selecting **Mesh**. When a Component has more than one meshing sequence, they are collected under a **Meshes** node. To add new meshing sequences to such a Component, you can alternatively right-click **Meshes**.

You create a mesh by building a meshing sequence, which contains a number of meshing operations as nodes in the sequence. For the default physics-controlled meshes, the software sets up the meshing sequences automatically.

For **Mesh** nodes created using adaptive mesh refinement, see Meshes Generated by Adaptation.

ADDING MESH NODES

Right-click a **Mesh** node ( ) in the Model Builder and then select an option from the context menu. Enter the properties in the **Settings** window. In numerical fields you can enter expressions that contain global parameters.

BUILDING SELECTED MESH NODES

To build all nodes (if needed) from the first up to the selected node:

- In a **Settings** window, click the **Build Selected** button ( ).
- Right-click a node under the main **Mesh** node and select **Build Selected**. Or click the node and press F7.

- Windows users: In the **Home** or **Mesh** ribbon toolbars, click **Build Mesh**.
- macOS and Linux users: In the **Model Toolbar** or the **Mesh Contextual Toolbar**, click **Build Mesh**.

BUILD ALL MESH NODES

To build all nodes in the meshing sequence (if needed):

- In a **Settings** window, click the **Build Mesh** button ( ).
- Right-click the main **Mesh** node ( ) and select **Build All**. Or click the **Mesh** node and press F8.
- Windows users: In the **Home** or **Mesh** ribbon toolbars, click **Build Mesh**.
- macOS and Linux users: In the **Model Toolbar** or the **Mesh Contextual Toolbar**, click **Build Mesh**.

EDITING MESH NODES

To edit a mesh node, select it in the tree, and make changes in the **Settings** window that appears. Nodes that you have edited display with an asterisk (*) at the upper-right corner of the icon ( ) in the **Model Builder**. The following nodes are marked with a yellow triangle at the lower-right corner of the node's icon to indicate that they need to be rebuilt. To see the result of your edits in the graphics, use the methods described above to either **Build Selected** or **Build All** nodes.

	Using Meshing Sequences: Application Library path **COMSOL_Multiphysics/Meshing_Tutorials/meshing_sequence**

Mesh (Node)

The main **Mesh** nodes ( ) are the main nodes for meshing sequences. See Adding, Editing, and Building Meshing Sequences above for more information about meshing sequences.

The **Mesh** node's **Settings** window contains the following sections:

MESH SETTINGS

From the **Sequence type** list, choose **Physics-controlled mesh** (the default) to let the physics interfaces determine meshing sequence according to the **Physics-Controlled Mesh** section below, or choose **User-controlled mesh** to control the mesh directly using subnodes to this **Mesh** node, such as **Size** nodes. See Choosing a Meshing Sequence Type for more information.

PHYSICS-CONTROLLED MESH

This section is only available when the **Sequence type** list is set to **Physics-controlled mesh**.

From the **Element size** list, choose an element size for the mesh from **Extremely coarse** to **Extremely fine** (default value: **Normal**).

In the table below, all active physics interfaces, multiphysics couplings, and moving mesh features in the model component appear in the **Contributor** column. By default, all check boxes under **Use** are selected so that all listed physics interfaces and moving mesh features contribute to the mesh control suggestions. Clear some of the check boxes if desired to control which physics interfaces and other features that contribute to the physics-controlled mesh. Some physics interfaces may have additional settings for mesh control. A separate section with these settings appears for every such physics interface if its corresponding **Use** check box is selected. See the documentation for each individual physics interface for more details.

Using Mesh Parts

You can use mesh parts for importing and preparing a mesh for use in a geometry sequence or meshing sequence. A mesh part is defined by an imported mesh from an STL, VRML, NASTRAN, MPHBIN, or MPHTXT file, or from some other meshing sequence. In addition, you can use mesh import operations to delete or partition parts of the mesh, for example, to prepare the imported mesh for use in a geometry sequence or meshing sequence, where you refer to the mesh part in an **Import** node. To insert the mesh into the new component, you can use a **Copy** node in the meshing sequence, where you use the mesh from the mesh part as the source.

When importing a NASTRAN file in the mesh part, it may include material definition, variables, and selections. All those properties are transferred to the component where you import the mesh part.

CREATING A MESH PART

You can add mesh parts from the **Global Definitions** node ( ) by right-clicking it and, from the **Mesh Parts** submenu, select **3D Part**, **2D Part**, or **1D Part**. If a **Mesh Parts** node ( ) already exists under **Global Definitions**, you can add another mesh part by right-clicking it and then select **3D Part**, **2D Part**, or **1D Part**. You can also create a mesh part by adding an **Import** node (see Import in the Geometry Modeling and CAD Tools chapter) and choosing **Mesh or STL** (in 3D) or **Mesh** (in 1D and 2D) as the source.

Within the mesh part you add an **Import** node (see Import) to import a mesh. In 2D and 3D, you can then add additional nodes for partitioning the mesh, deleting and joining entities, and creating vertices. Such operations can be useful to define additional domains, for example. There is also a **View** node with view settings (see User-Defined Views) below the mesh feature nodes.

USING A MESH PART IN A GEOMETRY SEQUENCE

In a geometry sequence or part you can create an instance of the mesh part by right-clicking the **Geometry** node and adding an **Import** node. Then choose **Mesh or STL** (in 3D) or **Mesh** (in 1D and 2D) from the **Source** list and choose the mesh part from **Mesh** list below to use the mesh part in the geometry sequence.

	From Surface Mesh to Geometry: STL Import of a Vertebra: Application Library path **COMSOL_Multiphysics/Meshing_Tutorials/stl_vertebra_import**

Mesh Part Settings

Under a **Mesh Part** node you add nodes for importing and modifying an externally generated mesh.

The **Settings** window for a **Mesh Part** node contains the following section:

UNITS

For mesh files that are unitless, the physical size of an imported mesh is independent of the length unit of the mesh part. For mesh files that define a unit, the imported mesh is scaled to match the unit of the mesh part, if the **Use units** check box is selected. You can also select this check box to use the length unit and angular unit (which you specify using the **Length unit** list and **Angular unit** list, respectively) in the nodes appearing under the **Mesh Part** node and to specify the length unit of the resulting file when exporting the mesh to a file format that supports length units.

If the mesh part and the component referring to the mesh part have different unit systems, the resulting geometry is scaled.

Meshes Generated by Adaptation

The solvers can generate adapted meshes for several problem types. See Adaptation and Error Estimates and The Adaptive Mesh Refinement Solver.

The meshes generated by the stationary or eigenvalue adaptive solver are based on the original meshing sequence and can be modified. The settings window for such a meshing sequence shows a reference to the generating study in the **Adaptation study** list. Click the **Go to Source** button ( ) to move to that generating study. Click the **Disconnect from Study and Edit** button, or right-click the **Mesh** node and select **Disconnect from Study and Edit**, to unlock the sequence and enable editing. Note that unlocking the sequence disconnects the mesh from the study that generated it; if you run the study again, this mesh is ignored and a new meshing sequence is generated. However, you can manually select this meshing sequence in the mesh selection of a study step, to run the study on the adapted and modified mesh.

Adapted meshes generated by the time-dependent adaptive solver are generated directly by the solver and cannot be further edited. If you alter the geometry, these meshes are no longer compatible with the geometry and are therefore removed.

The Mesh Statistics Window

For statistical information about the mesh element quality, right-click the **Mesh** node ( ) and select **Statistics** ( ). The **Statistics** window includes information about the minimum and average mesh element quality and a mesh element quality histogram, which shows the relative frequency of mesh elements with different quality values. The window contains the following sections:

GEOMETRIC ENTITY SELECTION

Define the geometric entities for which you want to display the statistics. Choose the level of the geometry from the **Geometric entity level** list:

- Choose **Entire geometry** to view statistics for the entire mesh.
- Choose **Domain** to specify the domains for which the statistics is displayed. Choose **Manual** in the **Selection** list to select the domains in the Graphics window or choose **All domains**.
- Choose **Boundary** to specify the boundaries for which the statistics is displayed. Choose **Manual** in the **Selection** list to select the boundaries in the Graphics window or choose **All boundaries**.
- Choose **Edge** to specify the edges for which the statistics is displayed. Choose **Manual** in the **Selection** list to select the edges in the Graphics window or choose **All edges**. This option is only available in 3D.
- Choose **Point** to specify the points for which the statistics is displayed. Choose **Manual** in the **Selection** list to select the points in the Graphics window or choose **All points**. This option is only available in 2D and 3D.

ELEMENT QUALITY

From the **Quality measure** list, choose the mesh quality measure to use for the mesh statistics:

- **Skewness**, the default quality measure
- **Maximum angle**
- **Volume versus circumradius**
- **Volume versus length**
- **Condition number**
- **Growth rate**

For more information about these mesh quality measures, see Mesh Element Quality and Size.

STATISTICS

In this section you find information on the status of the mesh: for example, if the mesh is empty, if the geometry is partially meshed, or if the geometry is completely meshed. You can select the element type for which you want to see statistics from the **Element type** list. The default is to display statistics for **All elements**. The statistics includes the

number of mesh elements of different types, such as tetrahedral elements and triangular elements. In the element statistics section below — for example, **Domain element statistics** — you find information about:

- The number of elements.
- The minimum and average element quality, based on the selected mesh quality measure. The element quality is a scalar value between 0 and 1, where a higher number indicates a higher mesh element quality.
- The element volume ratio or area ratio, which is the ratio between the volumes (areas) of the largest and smallest element.
- The mesh volume or area (the total volume or area for the mesh), or the mesh edge length when applicable.

Not all these quantities are available for all options in the **Element type** list.

ELEMENT QUALITY HISTOGRAM

This section displays a histogram plot of the mesh element quality, using the selected mesh quality measure, for the specified element type and selection. The x-axis represents the element quality, and the y-axis represents the number of elements of similar quality. The absolute value of the mesh element quality is always between 0 and 1, where 0.0 represents a degenerated element and 1.0 represents the best possible element.

You can also create a histogram plot of the mesh element quality over the total area or volume of the elements by adding a Histogram plot to a 1D Plot Group and using a variable for a mesh quality measure as the expression.

	Quality of Elements in the *COMSOL Multiphysics Programming Reference Manual*

Meshing Techniques

In this section:

- Choosing a Meshing Sequence Type
- Mesh Element Quality and Size
- Using Several Meshing Sequences of Imported Mesh Type
- Avoiding Inverted Mesh Elements
- Troubleshooting Boundary Layer Mesh Generation
- Troubleshooting Free Tetrahedral Mesh Generation

- Errors and Warnings
- Analyzing Model Convergence and Accuracy
- Achieving Convergence When Solving Nonlinear Equations
- Physics-Related Checks and Guidelines
- Geometric Variables, Mesh Variables, and Variables Created by Frames

Choosing a Meshing Sequence Type

PHYSICS-CONTROLLED MESH

If you select **Physics-controlled mesh** in the **Sequence type** list in the **Settings** window of a **Mesh** node and build the meshing sequence, COMSOL Multiphysics creates a mesh that is adapted to the current physics interface settings in the model. The default is to use physics-controlled mesh. For example, for a fluid-flow model you get a somewhat finer mesh than the default with a boundary layer mesh along the no-slip boundaries. If you want to modify the overall element size of the physics-induced mesh, select another element size from the **Element size** list in the **Settings** window of the main Mesh node and rebuild the mesh. If you change the physics interface settings in the model and rebuild the meshing sequence, COMSOL Multiphysics creates a new mesh adapted to the new physics interface settings.

A physics-induced mesh is not adapted by numerical error estimates — that type of adaptive meshing is provided by mesh adaptation in the solver sequence.

To edit a physics-induced meshing sequence, or to see the errors and warnings of a failing mesh build, select **User-controlled mesh** in the **Sequence type** list or right-click the **Mesh** node and select **Edit Physics-Induced Sequence** ( ). The program then adds the nodes under the main **Mesh** node that together form the physics-controlled mesh.

By doing this, the sequence is no longer updated according to changes that applied to the physics interface settings in the model.

If you right-click the **Mesh** node and select **Reset to the Physics-Induced Sequence** ( ), the sequence is reset to the physics-induced sequence. However, the type of the sequence is still **User-controlled mesh**. To switch back to physics-controlled meshing, select **Physics-controlled mesh** in the **Sequence type** list in the **Settings** window of the mesh node. If you add a node to the sequence, the type of the sequence automatically switches to **User-controlled mesh**.

USER-CONTROLLED MESH

Alternatively, you can use a user-controlled mesh. It is then possible to manually build and edit the meshing sequence using the meshing techniques described below for creating 2D and 3D meshes.

	If you select **User-controlled mesh** from the **Sequence type** list in the main **Settings** window for a **Mesh** node, the program adds a **Size** node and a node for the default mesher (**Free Triangular** in 2D, for example). If the **Sequence type** list is set to **Physics-controlled mesh** and you add a **Size** node, for example, the meshing sequence switches to a user-controlled mesh, but no default mesher is added.

Mesh Element Quality and Size

The mesh resolution and mesh element quality are important aspects to consider when validating a model. Low mesh resolution — in relation to the variations in the solution and the geometry — can lead to inaccurate results. A low mesh element quality — which measures the regularity of the mesh elements' shapes — can lead to inverted mesh elements (see Avoiding Inverted Mesh Elements) and to high condition numbers for the Jacobians, which in turn can cause convergence issues. The mesh element quality is a dimensionless quantity between 0 and 1, where 1 represents a perfectly regular element, in the chosen quality measure, and 0 represents a degenerated element. COMSOL Multiphysics includes the following mesh quality measures:

- **Skewness**, which is the default quality measure, is a measure of the equiangular skew is defined as the minimum of the following quantity:

$$1 - \max\left(\frac{\theta - \theta_e}{180 - \theta_e}, \frac{\theta_e - \theta}{\theta_e}\right)$$

  where θ is the angle over a vertex (2D) or edge (3D) in the element, θ_e is the angle of the corresponding edge or vertex in an ideal element, and the minimum is taken over all vertices (2D) or edges (3D) of the element.
- **Maximum angle**, which is based on the largest angle in the element. If no angle is larger than the largest angle of the corresponding optimal element, the quality is one; otherwise, the measure shows how much larger the angle is. This quality measure is insensitive to element anisotropy.
- **Volume versus circumradius**, which is based on a quotient of the element volume and the radius of the circumscribed sphere (or circle) of the element. This quality measure is sensitive to large angles, small angles, and anisotropy.
- **Volume versus length**, which is based on a quotient of element edge lengths and element volume. This quality measure is primarily sensitive to anisotropy.
- **Condition number**, which is based on the element dimension divided by the condition number (in the Frobenius norm) of the matrix transforming the element to a reference element.
- **Growth rate**, which is a measure of local (anisotropic) growth rate. Let $s_\alpha(E)$ denote the element size of an element E in a spatial direction α, and let E_α denote the element neighbor of E in the direction α. The growth rate measure is then the minimum of the quotient $\min(s_\alpha(E), s_\alpha(E_\alpha))/\max(s_\alpha(E), s_\alpha(E_\alpha))$, where α is taken over all directions.
- **Custom expression** (available in the **Mesh** plot node's Settings window), where your can enter a custom expression for the mesh quality (using the variables listed below, for example). The expression should evaluate to scalar values from 0 to 1.

The following built-in variables are available for these mesh quantities:

- `h`, the local mesh size (see also Geometric Variables and Mesh variables).
- `qualskewness`, the skewness mesh quality measure, which is the default mesh quality measure.

- `qualmaxangle`, the maximum angle mesh quality measure.
- `qual`, the volume versus circumradius quality measure.
- `qualvollength`, the volume versus length mesh quality measure.
- `qualcondition`, the condition number mesh quality measure.
- `qualgrowth`, the growth rate mesh quality measure.

All these variables are also available in variants for the various frames in a moving mesh or ALE simulation, for example. Append `_geometry`, `_mesh`, or `_spatial` to the base variable name to evaluate the quantity in the geometry frame, mesh frame, or spatial frame, respectively.

	Using `qual` without a frame suffix refers to the material frame if several frames are used.

	For quadrilateral and hexahedral elements with a large aspect ratio, which can appear in boundary layers, for example, the default mesh quality measure — skewness — and the maximum angle and growth rate quality measures report a high mesh quality, whereas the volume versus circumradius (the default and only quality measure) and the volume versus length quality measures report a low mesh quality because those measures take the aspect ratio into account. In general, if a mesh with a low mesh quality has been generated, a **Warning** node appears, indicating where the bad elements are located in the geometry. To locate the exact placement of the bad elements, use a **Mesh** plot node set to show elements of the right dimension and using an element filter like `qualskewness<0.01`.

DISPLAYING MESH ELEMENT QUALITY AND THE MESH ELEMENT SIZE

You can display the mesh element quality and the mesh element size using, for example, a surface plot in 2D or a volume plot in 3D. You can always use a Mesh dataset to display these quantities as soon as you have created a mesh. If you have a solution, you can also use a Solution dataset. For a Component with a mesh, the following steps display the mesh element quality or mesh element size:

1. Right-click the **Mesh** node and select **Plot** ( ). This creates a plot group with a **Mesh** plot node ( ).
2. By default, this plot shows the mesh element quality. You can choose the mesh quality measure to display from the **Quality measure** list. In the **Settings** window for **Mesh**, select **Size** instead of **Quality** from the **Element color** list to plot the mesh element size instead.

Alternatively, you can access the built-in variables for mesh element quality (`qual*`) and mesh element size (`h`) in a surface plot, for example:

1. Under **Results** ( ), right-click **Datasets** ( ) and select **Mesh** ( ).
2. Add a 2D or 3D Plot Group using the Mesh dataset as the group's dataset, and then add a Surface or Volume plot. For example, in a **2D Plot Group>Surface** node ( ), from the predefined quantities (under **Mesh**), select **qualskewness - Element quality** (the default mesh quality measure), **h - Element size**, or one of the other available mesh element quality quantities for another quality measure. Then click the **Plot** button ( ).

	• Mesh (Dataset) • Mesh (Plot) • Mesh (Export) • Mesh Report Node

INVERTED MESH ELEMENTS

If you have a mesh that is coarse along a curved boundary, you might encounter problems with inverted mesh elements. This means that a mesh element is wrapped inside-out or has zero area (in 2D) or volume (in 3D). More precisely, there is some coordinate for which the Jacobian matrix for the mapping from local to global coordinates has a negative or zero determinant. In most cases, the linear (straight) mesh elements that you see in a mesh plot are not inverted, but the higher-order curved mesh elements used for computing the solution might be. Studying the minimum element quality therefore does not reveal the presence of inverted mesh elements in most cases.

Inverted mesh elements in themselves do not pose any immediate threat to the overall accuracy of your solution. However, if you are using an iterative solver, it might fail to converge. If you reach convergence and the solution looks good, it likely is. It is worth bearing in mind that the faces where there are inverted elements are less than perfectly resolved. If these faces are important for your results, you might want to pursue a mesh without inverted elements or at least make sure that the mesh resolution is sufficiently fine to guarantee an accurate solution. The easiest way to get an idea of the accuracy is to try a few different meshes and see how the solution changes. If the variation does not exceed your limits of acceptance, you are fine.

The solver prints a message about inverted curved elements to the **Messages** window and corresponding warnings to the **Log** window if they appear. **Warnings** nodes ( ) also appear in the solver sequence where the inverted mesh elements appear. If you are using a **Free Tetrahedral** node to create the mesh, it is often possible to avoid inverted curved elements by selecting the **Avoid inverted curved elements** check box in the node's **Settings** window under **Element Quality Optimization**.

For a moving mesh, the mesh can become inverted, in which case an error occurs. In the **Error** node ( ), which appears in the solver sequence, information about the location of the inverted elements appears. The problematic mesh is available as a **Problematic Deformed Mesh** node ( ) under **Meshes**, so that you can inspect the mesh around the coordinates for the inverted mesh elements.

CURVED INTERIOR DOMAIN ELEMENTS

In many situations, the inverted elements can be fixed by curving elements inside the domain to match the boundary. You find the **Avoid inverted elements by curving interior domain** check box, which controls if elements inside the domain are curved, in the **Settings** window for the **Component** node. The default behavior is to curve interior domain elements when needed. In 3D, this setting also has the effect that elements inside a face can be curved to match the face edges.

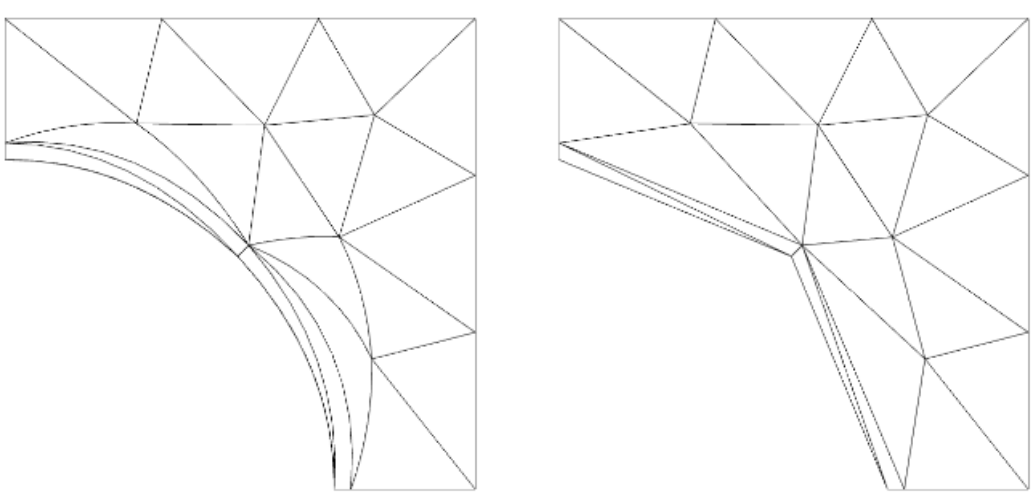

Figure 8-5: Curved interior mesh elements (left) and the corresponding linear mesh (right).

In some situations, it is impossible to avoid the inverted elements no matter how the interior mesh elements are curved. This can, for example, happen if the domain becomes infinitely thin where two circles (or cylinders in 3D) touch, or if the mesh is extremely coarse and does not approximate the true geometry shape well enough. Then the higher-order node points (that control the curving) are moved away from the geometry boundaries, typically making the elements less curved than they should be according to the geometry. When this happens, the solver will print out information indicating how many points were moved and how much in the **Log** window.

	The algorithm for avoiding inverted elements by curving interior domains does not guarantee that symmetry properties in the mesh are retained. If such symmetry properties are important, then clear **Avoid inverted elements by curving interior domain** check box.

Visualizing the Geometry Approximation

The `geomapproxdist` variable indicates, for each element, how far a node point in the element was moved from the geometry. To see the parts of the geometry that are affected, you can make a surface plot of `geomapproxdist`, or make a volume plot with an element filter set to `geomapproxdist>0`.

USING LINEAR INTERIOR DOMAIN ELEMENTS

If you disable the use of curved interior domain elements, the solver tries to avoid inverted elements by linearization. This is done by reducing the geometry shape order for the corresponding elements to first order. By default, the solver does this automatically. Alternatively, you can avoid problems with inverted mesh elements by using linear geometry shape order for all elements. You do this by choosing **Linear** from the **Geometry shape order** list in the **General** section of the **Settings** window for the main **Component** node.

Visualizing Linearized Elements

The variable `linearizedelem` is 1 in elements that are linearized and 0 elsewhere. You can use this variable to identify mesh elements with linearized elements. For example, use `linearizedelem` as the expression in a plot.

MODIFYING THE GEOMETRY OR MESH

To reduce problems with badly shaped elements or geometry approximations you can try any of the following:

- Select the **Avoid inverted curved elements** check box in the **Free Tetrahedral** node's **Settings** window under **Element Quality Optimization**.
- Create a swept 3D mesh instead of using the free mesher.
- Avoid small curved boundaries such as fillets unless they are important for the result. If they are important, they must be meshed with sufficiently small elements.
- Avoid infinitely narrow regions in domains and on faces. If two faces (or edges) of the boundary to a domain are tangent to each other along a curve or in a point, element will be inverted or nearly inverted where the domain becomes infinity thin.

VISUALIZING INVERTED MESH ELEMENTS

If the method used to avoid inverted elements fails, it may happen that inverted elements are present in the mesh you solve on, as described in the first section. You can visualize inverted mesh elements using the built-in `reldetjacmin` variable, which is the minimum (over each element) of the determinant of the Jacobian matrix for the mapping from the straight mesh element to the possibly curved mesh element used by the solver. A minimum value less than zero for an element means that the element is wrapped inside-out; that is, it is an inverted mesh element.

A typical visualization uses `reldetjacmin` as the quantity to plot as a volume plot. To display only the inverted elements, add a **Filter** subnode using the logical expression `reldetjacmin<0` to include only the inverted elements or `reldetjacmin<0.2` to include also highly curved elements.

If you experience inverted mesh elements while meshing or while importing meshes, you usually do not have a solution. In such cases, create a Mesh Plot with the logical expression `qual<eps` instead because `reldetjacmin` is not available. The plot then shows both the inverted mesh elements, for which the mesh quality is negative, and the totally degenerated elements, for which the mesh quality is zero or very close to zero.

If you use `reldetjacmin`, the plot shows the quality of higher-order elements (if any), while `qual` always uses linear elements.

- Adaptive Mesh Refinement (attribute node)
- Automatic Remeshing
- The Progress Window
- The Log Window
- Adaptive Mesh Refinement (Utility Node)
- Mesh

Troubleshooting Boundary Layer Mesh Generation

The boundary layer meshing algorithm is sensitive to the topology of the model geometry. If you get an error when trying to build a Boundary Layers node, try the following:

- Remove unnecessary interior boundaries such as boundaries (resulting from Boolean operations of geometry objects) that do not separate materials or physics. An efficient way to do this is to mark these boundaries as Mesh Control Entities in the Geometry Sequence. Once you have removed unnecessary boundaries, mesh the domains using a Free Tetrahedral or a Swept Mesh. When the domains are meshed, the control boundaries are automatically removed, and you can insert boundary layers, ignoring the interfering boundaries.
- Use boundary layer mesh trimming instead of splitting. By default, the boundary layer mesher creates a boundary layer split at each sharp corner in 2D and along each sharp edge in 3D.

To turn off boundary layer splits, see Boundary Layers.

If the mesh generator fails to generate a boundary layer mesh, **Error** nodes ( ) appear under the **Boundary Layers** node. If the **Error** node contains details with coordinates for the location where it failed to create the mesh, the Graphics window indicates that location using red circles. Click the **Center at Coordinates** button to center the camera so that you can zoom into that location by clicking the **Zoom In** button ( ) one or more times.

Troubleshooting Free Tetrahedral Mesh Generation

This section gives you some suggestions about how to solve problems that you might encounter when creating tetrahedral meshes.

BUILD A FINER MESH

As a general rule, it is easier to construct a mesh with smaller elements than a mesh with larger elements. If you get errors or low-quality elements when you try to mesh certain domains, try to decrease the element size using appropriate Size attributes on these domains.

USE AN APPROPRIATE MINIMAL ELEMENT SIZE

If your geometry contains details that are very small compared to the total volume of the mesh, you must ensure that the Minimum element size parameter in the corresponding Size attribute is at least as small as the smallest detail you want to resolve. If this parameter is too large, you get warnings when building the node. For example, the warning "Edge is much shorter than the specified minimum element size" indicates that there are edges significantly shorter than the specified minimum element size. The resulting mesh gets badly shaped elements.

	To locate small details, such as short edges and sliver faces, you can add and build a Free Tetrahedral node with normal size settings. Doing this results in warnings with selections that point you to the corresponding small entities. You can also inspect the mesh visually to locate unexpected small elements.

REMOVE UNWANTED GEOMETRY DETAILS

Sometimes, the geometry contains small features, like sliver faces and short edges, which you do not want to resolve at all. Then you can use Virtual Geometry Operations in the sequence to ignore disturbing details of the geometry.

If you have a license for the CAD Import Module, you can also use CAD defeaturing operations to simplify the geometry.

PARTITION THE GEOMETRY INTO SIMPLE DOMAINS

If the geometry includes complex domains or complex faces that you have trouble meshing, you can try to partition the geometry into less complex entities. On a philosophical level, this method could be classified as a "divide and conquer" strategy. It is often possible to use the Partition Objects geometry feature to partition a complex domain into two domains. You can use a Mesh Control Faces node to make this partitioning only when building the mesh (see Mesh Control Entities).

	To split a solid geometry object into parts using a Work Plane, place the work plane where you want to cut the domain. Then add a **Partition** node from the **Boolean Operations** submenu, and select **Work plane** from the **Partition with** list in the **Settings** window for **Partition**.

Meshing Operations and Attributes

A meshing sequence corresponding to a geometry consists of Mesh Operations and Mesh Attributes. The attribute nodes store properties that are used by the operation nodes when creating the mesh. You can also choose the Predefined Mesh Element Sizes.

MESH OPERATIONS

The following table lists the available mesh operations:

TABLE 8-2: OPERATION NODES

ICON	NAME	DESCRIPTION	GEOMETRIC ENTITY LEVEL
	Adapt	Use adaptive mesh generation based on an error estimate from a computed solution.	Entire geometry and domain
	Boundary Layers	Create a boundary layer mesh — a mesh with dense element distribution in the normal direction along specific boundaries. This mesh is typically used for fluid flow problems to resolve the thin boundary layers along the no-slip boundaries.	Domain
	Convert	Some geometries have domains that are well suited for swept meshes. If there are surrounding domains that cannot be swept, you can use this to convert faces with quadrilateral mesh between these domains to faces with triangular mesh.	Domain and boundary
2D 3D	Copy Domain	Copy a mesh between domains.	Domain
2D 3D	Copy Edge	Copy a mesh between edges. A 3D Copy Edge feature can also be used for destination edges of different shapes.	Edge
	Copy Face	To make a copy of a mesh that you can use to create an identical mesh on, for example, two boundaries in a model with periodic boundary conditions.	Boundary
	Copy	Copy a mesh from another meshing sequence, typically of imported mesh type, or mesh part into a meshing sequence corresponding to a geometry.	Entire geometry, domain, boundary, or edge
	Edge	To create an edge mesh. This menu button works in the same way as the Free Tetrahedral button.	Edge
	Free Quad	Create an unstructured quadrilateral mesh. This menu button works in the same way as the Free Tetrahedral button.	Boundary
	Free Tetrahedral	Create an unstructured tetrahedral mesh. If no selection is specified, this feature creates a mesh on the remaining domains, boundaries, edges and points.	Domain, boundary, edge, or point
	Free Triangular	Create an unstructured triangular mesh. This menu button works in the same way as the Free Tetrahedral button.	Boundary
	Mapped	To create a structured quadrilateral mesh on boundaries in 3D and domains in 2D. This menu button works in the same way as the Free Tetrahedral button.	Boundary
	Reference	To refer to another meshing sequence. Building a Reference node runs the operation nodes of the referenced sequence.	

TABLE 8-2: OPERATION NODES

ICON	NAME	DESCRIPTION	GEOMETRIC ENTITY LEVEL
	Refine	Refine a mesh by splitting elements.	
	Swept	Create a swept mesh. In domain selection mode this button works in the same way as the Free Tetrahedral button. In boundary selection mode the software creates a swept mesh on the remaining domains using the selected boundaries as source faces.	Domain

MESH ATTRIBUTES

The following table lists the mesh attributes:

TABLE 8-3: MESH ATTRIBUTE NODES

ICON	NAME	DESCRIPTION
	Boundary Layer Properties	To specify the location of the boundary layers and the properties, such as the number and thickness of the boundary layers.
	Corner Refinement	To decrease the element size at sharp corners. The node considers a vertex in 2D or an edge in 3D to be a sharp corner if the angle between the adjacent selected boundaries, with respect to the selected domain, is greater than a specified angle.
	Distribution	To specify the distribution of mesh elements along an edge, for example. It is possible to add Distribution nodes both as global nodes and as local nodes.
	Edge Groups	To specify the four groups of edges around a boundary (3D) or domain (2D) that is used to determine the Mapped mesh of the boundary/domain.
	Edge Map	Using this node, the source mesh of the Copy Face or Copy Domain operation is transformed so that the source edge of the Edge Map node is mapped onto the destination edge of the Edge Map node with the specified orientation.
	One-Point Map	To define the orientation of the source mesh on the destination for a Copy Face or Copy Domain feature by specifying how to map one point adjacent to the source to a point adjacent to the destination.
	Scale	To scale the properties of the Size, Distribution, and Boundary Layer Properties nodes.
	Size	To specify the size of mesh elements. It is possible to add Size nodes both as global nodes and as local nodes.
a=	Size Expression	To specify the size of mesh elements using an expression evaluated on the grid or on a solution.
	Two-Point Map	To define the orientation of the source mesh on the destination for a Copy Face or Copy Domain feature by specifying how to map a pair of points adjacent to the source to a pair of points adjacent to the destination.

Adapt

An **Adapt** node ( ) provides the possibility to use adaptive mesh refinement based on some error estimate from a computed solution. Adapt nodes are part of mesh sequences that the adaptive solver creates. You can also add **Adapt** nodes by right-clicking a **Mesh** node and select it from the **More Operations** submenu. An **Adapt** node modifies an existing mesh based on an expression, typically by refining the mesh based on error information from a solution.

	If you want to perform adaptive mesh refinement by manually adding an **Adapt** node, first create a new meshing sequence and copy the original mesh into that meshing sequence before adding an **Adapt** node.

The **Adapt** node's **Settings** window contains the following sections.

DOMAIN SELECTION

From the **Geometric entity** list, choose **Entire geometry** (the default) or **Domain** to select a set of domains for which the adaptation is active.

ADAPTATION

From the **Solution** list, select the solution to use for evaluation, or choose **None** to not use any solution.

From the **Solution selection** list, select which solution that should be used to evaluate error estimates:

- Select **Use last** to use the last solution.
- Select **Use first** to use the first solution.
- Select **All** (the default for Eigenvalue studies) to use all solutions from that study.
- Select **Manual** to use a specific solution number that you specify as solution indices in the **Index** field.

In the **Weights** field (only available when **Solution selection** is **Manual** or **All**), enter weights as a space-separated list of positive (relative) weights so that the error estimate is a weighted sum of the error estimates for the various solutions (eigenmodes). The default value is 1, which means that all the weight is put on the first solution (eigenmode). That is, any omitted weight components are treated as zero weight.

From the **Type of expression** list, choose **Error indicator** (the default), **Absolute size**, or **Anisotropic metric**.

Error Indicator

If you select **Error indicator**, the following settings appear:

The **Error expression** list, where you can add expressions for the error, for example, in terms of the dependent variables (including the variables for error estimation). You can use any expression, including field variables and their derivatives, defined in the domain. Use the **Move Up** ( ), **Move Down** ( ), **Add** ( )and **Delete** ( ) buttons as needed. If you use several expressions, such as one for each solution component, the error expressions are added to form the sum of all of them. Or right-click a table cell and select **Move Up**, **Move Down**, **Add**, or **Delete**.

Use the **Adaptation method** list (2D and 3D only) to control how to adaptively refine mesh elements. Select one of these methods:

- **General modification**, to use the current mesh as a starting point and modify it by refinements, coarsening, topology modification, and point smoothing. Use the **Allow coarsening** check box (selected by default) to control if mesh coarsening is used. If the mesh contains anisotropic elements (for example, a boundary layer mesh), it is best to disable mesh coarsening to preserve the anisotropic structure. If mesh coarsening is allowed, enter a **Maximum coarsening factor** (default: 5) if needed.
- **Regular refinement**, to make the solver refine elements in a regular pattern by bisecting all edges of an element that needs refinement.
- **Longest edge refinement**, to make the solver refine only the longest edge of an element by recursively bisecting the longest edge of edge elements that need refinement. This method is less suitable for models with nonsimplex elements. This is the default method.

Enter a value for the **Maximum number of refinements** (default: 5 in 2D and 3D; 16 in 1D), if needed.

Use the **Element selection** list to specify how the element refinement vector is determined from the error expression. Select:

- **Rough global minimum** to minimize the L_2 norm of the error by refining a fraction of the elements with the largest error in such a way that the total number of elements increases roughly by a factor greater than 1 specified in the accompanying **Element count growth factor** field. The default value is 1.7, which means that the number of elements increases by roughly 70%. The **Error orders** field is an array of h-exponents for the decrease of the error

expression. This array has the same indexing as the error expression's indexing. (for an error expression with two expressions such as `errexpr1`, `errexpr2` and error orders = 2, 3, it means that `errexpr1` = $O(h^2)$ and `errexpr2` = $O(h^3)$). When the adaptation method is used, these numbers are filled in automatically based on the **Residual order** and **Error estimate** settings (on the adaptation study). The shape functions can also influence this order. Note that these order numbers need to be positive to generate additional elements (element growth).

- **Fraction of worst error** to refine elements whose local error indicator is larger than a given fraction of the largest local error indicator. Use the accompanying **Element fraction** field to specify the fraction. The default value is 0.5, which means that the fraction contains the elements with more than 50% of the largest local error.
- **Fraction of elements** to refine a given fraction of the elements. Use the accompanying **Element fraction** field to specify the fraction. The default value is 0.5, which means that the solver refines about 50% of the elements with the largest local error indicator.

Absolute Size

If you select **Absolute size**, the following settings appear:

In the **Size expression** field, type an expression for the element size (in terms of variables defined by the solution).

	When you evaluate on a solution, the spatial variables (and any other length dependent variable, such as the local mesh size `h`), has the units of the component. So if your 2D geometry uses km as the length unit and is a unit square, assuming the component uses the SI unit system, the range of x and y would be 0 to 1000 (m) on the same geometry. Also note that the evaluated value of the expression is interpreted as a length in the geometry's unit system.

	Size expressions that can be evaluated on boundaries only cannot be used for geometries with domains, even if they are applied only on the boundary.

In 2D and 3D, use the **Adaption method** list to control how to refine mesh elements. Select one of the following methods:

- **General modification**, to use the current mesh as a starting point and modify it by refinements, coarsening, topology modification, and point smoothing. Use the **Allow coarsening** check box to control if mesh coarsening is used. If the mesh contains anisotropic elements (for example, a boundary layer mesh), it is best to disable mesh coarsening to preserve the anisotropic structure.

	It is not possible to coarsen hexahedral elements in the mesh.

- **Regular refinement**, to make the solver refine elements in a regular pattern by bisecting all edges of an element that needs refinement.
- **Longest edge refinement**, to make the solver refine only the longest edge of an element by recursively bisecting the longest edge of edge elements that need refinement. This method is less suitable for models with nonsimplex elements. This is the default method.

Anisotropic Metric.

	This is an advanced option, where it can be difficult to formulate a useful and nontrivial anisotropic measure.

If you select **Anisotropic metric** (2D and 3D only), the following settings appear:

In the matrix (2-by-2 in 2D; 3-by-3 in 3D) that appears, you can enter a metric in upper-triangular parts (the matrix is a positive definite symmetric matrix). The expressions for the metric can vary in space and include the local mesh element size `h`. The default value is a diagonal matrix with the diagonal elements set to `1/h`, which means "no modification" for an isotropic mesh. The interpretation of the matrix is as follows: The vector representing an edge of an element is transformed by the matrix in that point, and the length of the transformed vector is measured. If the length is shorter than 1.0, it is considered too short. If it is longer than 1.0, it is considered too long. This measure is used to control the adaptation.

External Changes

The following settings are available under **External changes** if the **Solution** list is set to **None**.

There is a caching scheme that caches various data required to compute the mesh size field. If you have changed something in the model, which has not been picked up by the code and thus invalidated the cache, you can clear the cache by clicking **Reevaluate with Updated Model**.

The selection in the **Update when parameter is changed** list provides the possibility to have the cache cleared whenever the values of the selected parameter are changed.

Boundary Layers

A **Boundary Layers** mesh ( ) is a mesh with dense element distribution in the normal direction along specific boundaries. This type of mesh is typically used for fluid flow problems to resolve the thin boundary layers along the no-slip boundaries.

	In 2D, a layered quadrilateral mesh is used along the specified no-slip boundaries.

	In 3D, the boundary layer mesh is a layered prism mesh or a hexahedral mesh depending on whether the corresponding boundary-layer boundaries contain a triangular or a quadrilateral mesh.

Additional elements of an arbitrary type can also be inserted into the layers if needed.

To create a boundary layer mesh:

- In the **Graphics** window, select the boundaries where you want to insert boundary layer elements. On The Mesh Toolbar click the **Boundary Layers** button ( ). This adds a node with the same name, as well as a default **Boundary Layer Properties** node and at the same time inserts boundary layer elements for the selected boundaries, with the meshed domains adjacent to the selected boundaries as domain selection.
- In the **Mesh** ribbon toolbar (Windows) or from the **Mesh** contextual toolbar (macOS and Linux), click the **Boundary Layers** button ( ).
- Right-click a 2D or 3D **Mesh** node and select **Boundary Layers**.

Then enter the properties for the boundary layer mesher using the following sections:

DOMAIN SELECTION

Specify the domains where you want a boundary layer mesh by first choosing an option from the **Geometric entity level** list:

- Choose **Entire geometry** to specify boundary layer mesh for the entire geometry.
- Choose **Domain** to specify the domains for which you want a boundary layer mesh. Choose **Manual** in the **Selection** list to select the domains in the Graphics window or choose **All domains** to select all domains.

CORNER SETTINGS

The following options for handling boundary layers at sharp corners are available from the **Handling of sharp corners** list (in 2D) and the **Handling of sharp edges** list (3D):

- Select **Splitting** (the default) to introduce boundary layer splits at sharp corners. In the **Minimum angle for splitting** field you specify the minimum angle between adjacent boundary layer boundaries for a split to occur. Control the maximum angle of the elements in the split region by the **Maximum angle per split** parameter.
- Select **Trimming** to trim the boundary layer mesh at sharp corners. In the **Minimum angle for trimming** and in the **Maximum angle for trimming** fields you specify the minimum angle and maximum angle, respectively, between adjacent boundary layer boundaries for trimming to occur.
- Select **None** to not use any special treatment at sharp corners.

In the **Maximum layer decrement** field you can specify the maximum difference in number of boundary layers between neighboring points on boundary layer boundaries.

TRANSITION

Select the **Smooth transition to interior mesh** check box to smooth the transition in element size from the boundary layer mesh to the interior mesh. You can specify the number of smoothing iterations in the **Number of iterations** field. In the **Maximum element depth to process** field you can specify the maximum element depth, from the boundary layer interface, for the mesh points to be smoothed.

When a **Boundary Layers** node is added, a **Boundary Layer Properties** node is automatically added as a subnode. Use this subnode to specify the boundary layers and the properties of the boundary layers. If you want to specify different boundary layer properties for more than one boundary selection, right-click the **Boundary Layers** node and add additional **Boundary Layer Properties** subnodes. However, adjacent boundaries must have the same number of boundary layers.

	• With the Batteries & Fuel Cells Module, see *Soluble Lead-Acid Redox Flow Battery* (2D): Application Library path **Batteries_and_Fuel_Cells_Module/Flow_Batteries/pb_flow_battery**. • With the CFD Module, see *Turbulent Flow over a Backward-Facing Step* (2D): Application Library path **CFD_Module/Verification_Examples/turbulent_backstep**. • With the Heat Transfer Module, see *Turbulent Flow over a Backward-Facing Step*: Application Library path **Heat_Transfer_Module/Verification_Examples/turbulent_backstep**.

	Boundary Layer Properties

Boundary Layer Properties

Add a **Boundary Layer Properties** node ( ) to specify the location of the boundary layers and the properties, such as the number and thickness of the boundary layers.

By default, one Boundary Layer Properties node is added as a subnode to a Boundary Layers node. To add additional nodes, right-click a 2D or 3D **Mesh** node and select **Boundary Layers Properties**; then enter the properties using the following sections:

BOUNDARIES

Define the boundaries where you want boundary layers. Choose **Manual** in the **Selection** list to select the boundaries in the **Graphics** window or choose **All boundaries** to select all boundaries.

BOUNDARY LAYER PROPERTIES

The default **Number of boundary layers** is 8.

The default **Boundary layer stretching factor** is 1.2. This field is used to specify the increase in thickness between two consecutive boundary layers as a scaling factor; for example, entering `1.3` means that the thickness increases by 30% from one layer to the next.

To specify the thickness of the first element layer — the layer adjacent to the corresponding boundary — choose an option from the **Thickness of first layer** list: **Automatic** (the default) or **Manual**.

- If **Automatic** is kept as the default, the thickness of the first layer is 1/20 of the local domain element height. Enter the **Thickness adjustment factor** to specify a scaling factor that multiplies this default size. The default is 1.
- If **Manual** is selected, the default **Thickness** (SI unit: m)) is 0.00118 m.

!	The boundary layer meshing algorithm shrinks the boundary layers automatically if needed (for example, due to a narrow region); however, the stretching factor is always respected. In some cases the boundary layer meshing algorithm can choose to create fewer layers than specified. If this happens, a warning is printed to the Log page of The Progress Window.

Convert

Use the **Convert** ( ) node to convert quads to triangles in 2D and hexahedra, prisms, and pyramids to tetrahedra in 3D.

GEOMETRIC ENTITY SELECTION (3D) / DOMAIN SELECTION (2D)

First define the geometric entities where you want to convert the mesh elements. You choose the level of the geometry from the **Geometric entity level** list:

- Choose **Entire geometry** to convert the mesh elements on all domains (and all boundaries in 3D).
- Choose **Domain** to specify the domains for which you want to convert mesh elements. Choose **Manual** in the **Selection** list to select the domains in the **Graphics** window, choose **All domains** to select all domains, or choose any applicable user-defined selection, if available.
- Choose **Boundary** to specify the boundaries for which you want to convert mesh elements. Choose **Manual** in the **Selection** list to select the boundaries in the **Graphics** window, choose **All boundaries** to select all boundaries, or choose any applicable user-defined selection, if available. This option is only available in 3D.

ELEMENT SPLIT METHOD

From the **Element split method** list, select **Insert diagonal edges** (the default setting) to split each quadrilateral element into two triangular elements and each hexahedral element into five tetrahedral elements, or select **Insert center points** to split each quadrilateral element into four triangular elements and each hexahedral element into 28 tetrahedral elements. The conversion also affects quadrilateral elements on the boundaries of the specified domains in 3D.

Corner Refinement

Add a **Corner Refinement** node ( ) to decrease the element size at sharp corners. The node considers a vertex in 2D or an edge in 3D to be a sharp corner if the angle between the adjacent selected boundaries, with respect to the selected domain, is greater than a specified angle.

- In the **Mesh** ribbon toolbar (Windows), from the **Operations>Modify** ( ) menu choose **Size>Corner Refinement**.
- From the **Mesh** contextual toolbar (macOS and Linux), from the **Modify** ( ) menu choose **Size>Corner Refinement**.
- To add it as a global node, right-click a **Mesh** node and select **Corner Refinement**. To add it as a subnode to a Mesh Operations node, right-click an operation node and select **Corner Refinement**. See Global vs. Local Attribute Nodes.

	If there are several Corner Refinement nodes in the sequence with a nonempty selection intersection, the mesher uses properties corresponding to the last Corner Refinement node in the sequence.

Then enter the properties using the following sections:

DOMAIN SELECTION

Specify the domains for which the node determines if the specified corners are sharp. Choose the level of the geometry from the **Geometric entity level** list:

- Choose **Entire geometry** to specify that the node should determine sharp corners with respect to all domains. The corner refinement also considers corners not adjacent to any domain.
- Choose **Domain** to specify the domains for which you want to determine sharp corners. Choose **Manual** in the **Selection** list to select the domains in the **Graphics** window or choose **All domains** to select all domains.

By default, Domain Selections are **Active** (the **Active** button is ON).

BOUNDARY SELECTION

To specify the boundaries, click the **Active** button to turn it ON and select the boundaries in the **Graphics** window for which the corner refinement should determine the sharp corners. When the boundary selection is **Active**, the **Domain Selection** section **Active** button is automatically turned OFF.

ANGLE

Use the **Minimum angle between boundaries** field to specify the minimum angle between a pair of adjacent boundaries in the boundary selection for the refinement factor to apply at the vertex in 2D and edge(s) in 3D between the two boundaries. If a boundary pair is adjacent to one domain on each side (interior boundary) the corner refinement determines the angle(s) on the side(s) corresponding to the specified domain(s).

REFINEMENT

Use the **Element size scaling factor** field to specify a refinement factor (<1) that scales the element size for the vertices in 2D and edges in 3D corresponding to the sharp corners.

Copy Domain

Add a **Copy Domain** node to 2D ( ) or 3D ( ) models to create identical meshes on domains.

Copying a mesh to a destination domain in 2D that is adjacent to a meshed domain is possible if the edges between these domains have the same number of elements as the corresponding source edges. The mesh on the destination edges is kept and the copied domain elements are modified to fit with this edge mesh.

Copying a mesh to a destination domain in 3D that is adjacent to a meshed domain is also possible if each face between these domains has a mesh isomorphic to a mesh of the corresponding source face. The mesh on the destination face is kept and the copied domain elements are modified to fit with this face mesh.

The edges around the source and destination domains in 2D are allowed to be partitioned differently but only in such a way that several edges of the source domain map to one edge of the destination edge. Not the other way around.

The faces around the source and destination domains in 3D are also allowed to be partitioned differently with exactly that same limitation (source to destination face mapping must be many-to-one).

If you copy between domains with a common boundary, the copy operation mirrors the mesh if the domains are symmetric. If the domains are symmetric but separated from each other, you can enforce a mirrored mesh by adding an **Edge Map** or a **Two-Point Map** subnode that controls the orientation of the copied mesh.

To copy a mesh between domains:

- In the **Graphics** window, select both the domains to copy the mesh from and the domains to copy the mesh to. Then on The Mesh Toolbar click the **Copy Domain** button in 2D ( ) or 3D ( ). This adds a node with the same name and copies the mesh and includes the source domains set to the selected domains with a mesh and the destination domains set to the selected domains without a mesh.
  - In the **Mesh** ribbon toolbar (Windows), from the **Operations>Copy** ( ) menu choose **Copy Domain**.
  - In the **Mesh** contextual toolbar (macOS and Linux), from the **Copy** menu ( ) choose **Copy Domain**.
- Right-click a **Mesh** node and choose **More Operations>Copy Domain**.

Then enter the properties for the copy meshing operation using the following sections:

SOURCE AND DESTINATION DOMAINS

It is possible to copy a mesh from one or several source domains onto one or several destination domains. The source (or their combination, if many-to-one is used) must be a connected set of exactly the same shape as the corresponding destination, up to a constant scaling factor. More precisely, the distance between any two geometry vertices on the destination is required to be the same, up to a constant scaling factor, as the distance between the corresponding geometry vertices on the source.

Click the **Active** button to toggle between turning ON and OFF selections. Select the domains to copy the mesh from in the **Graphics** window.

	The source domains must be connected when the **Single destination (many-to-one)** option is specified. In an assembly, an identity pair is not sufficient to connect boundaries across parts. Instead, consider forming a union of the parts or splitting the destination boundary (using imprints, for example) so that the mesh copy is a one-to-one copy operation using two or more **Copy Domain** nodes.

TYPE OF COPY

Select **Automatic** (the default) to let the software determine the proper copy method, select **Single destination (many-to-one)** to let the entire source mesh be copied onto each destination entity separately, and select **Array copy (many-to-many)** to let each single source entity mesh be copied onto a corresponding single destination entity.

> **Array copy (many-to-many)** can be used only if a bijective transformation of source to destination can be found (a transformation that sets 1-to-1 mapping between source and destination).

SWITCH SELECTIONS

Click the **Switch Source and Destination** button to switch source and destination selections. Edge map is available to be switched, if provided.

CONTROL ENTITIES

Select the **Smooth across removed control entities** check box to smooth the transition in element size across removed control entities. You can specify the number of smoothing iterations in the **Number of iterations** field. In the **Maximum element depth to process** field you can specify the maximum element depth, from the boundary layer interface, for the mesh points to be smoothed.

> To control the orientation of the source mesh on the destination when using the **Copy Domain** node, right-click and add an Edge Map, One-Point Map, or Two-Point Map node as a local attribute.

Copy Edge

Add a **Copy Edge** node to 2D ( ) and 3D ( ) models to create identical meshes on edges. A 3D **Copy Edge** feature can also be used for destination edges of different shapes.

To copy a mesh between edges:

- In the **Graphics** window, select both the edges to copy the mesh from and the edges to copy the mesh to. On The Mesh Toolbar, click the **Copy Edge** button for 2D ( ) or 3D ( ) models. This adds a node with the same name, copies the mesh, and includes the source edges set to the selected edges with a mesh and the destination edges set to the selected edges without a mesh.
  - In the **Mesh** ribbon toolbar (Windows), from the **Operations>Copy** ( ) menu choose **Copy Edge**.
  - In the **Mesh** contextual toolbar (macOS and Linux), from the **Copy** menu ( ) choose **Copy Edge**.
- Right-click a **Mesh** node and choose **More Operations>Copy Edge**.

Then enter the properties for the copy meshing operation using the following sections:

SOURCE AND DESTINATION EDGES

It is possible to copy a mesh from one or several source edges onto one or several destination edges. The source (or their combination, if many-to-one is used) must be a connected set of exactly the same shape as the corresponding destination, up to a constant scaling factor. More precisely, the distance between any two geometry vertices on the destination is required to be the same, up to a constant scaling factor, as the distance between the corresponding geometry vertices on the source.

Click the **Active** button to toggle between turning ON and OFF selections. Select the edges to copy the mesh from in the **Graphics** window.

!	The source edges must be connected when **Single destination (many-to-one)** option is specified. In an assembly, an identity pair is not sufficient to connect boundaries across parts. Instead, consider forming a union of the parts or splitting the destination boundary (using imprints, for example) so that the mesh copy is a one-to-one copy operation using two or more **Copy Face** or **Copy Edge** nodes.

TYPE OF COPY

See Copy Domain for settings information.

SWITCH SELECTIONS

See Copy Domain for settings information.

CONTROL ENTITIES

See Copy Domain for settings information.

ORIENTATION

Select **Automatic orientation** to let the software determine the orientation of the source mesh on the destination automatically (this is the default), select **Same orientation** to let the source mesh be copied to the destination according to the direction of the edges, and select **Opposite orientation** to let the source mesh be copied to the destination in the opposite direction. Use the option **Show edge direction arrows** in the **View** node under the **Definitions** node to view the arrow direction.

Copy Face

For 3D models, use a **Copy Face** node ( ) to make a copy of a mesh that you can use to create an identical mesh on, for example, two boundaries in a model with periodic boundary conditions.

Copying a mesh to a face that is adjacent to a meshed face is possible if the edges between these faces have the same number of elements as the corresponding source edges. The mesh on the destination edges is kept and the copied face elements are modified to fit with this edge mesh.

The edges around the source and destination faces are allowed to be partitioned differently, but only in such a way that several edges of the source face map to one edge of the destination edge, not the other way around.

	Copying a face mesh in 3D is only possible if the destination face is not adjacent to any meshed domain. The copy node overwrites any existing mesh on the destination face.

To copy a mesh between faces:

- In the **Graphics** window, select both the boundaries to copy the mesh from and the boundaries to copy the mesh to. On The Mesh Toolbar click the **Copy Face** ( ) button. This adds a node with the same name and copies the mesh and includes the source boundaries set to the selected boundaries with a mesh and the destination boundaries set to the selected boundaries without a mesh.
  - In the **Mesh** ribbon toolbar (Windows), from the **Operations>Copy** ( ) menu choose **Copy Face**.
  - In the **Mesh** contextual toolbar (macOS and Linux), from the **Copy** menu ( ) choose **Copy Face**.
- Right-click a **Mesh** node choose **More Operations>Copy Face**.

Then enter the properties for the copy meshing operation using the following sections:

SOURCE AND DESTINATION BOUNDARIES

It is possible to copy a mesh from one or several source boundaries onto one or several destination boundaries. The source (or their combination, if many-to-one is used) must be a connected set of exactly the same shape as the corresponding destination, up to a constant scaling factor. More precisely, the distance between any two geometry vertices on the destination is required to be the same, up to a constant scaling factor, as the distance between the corresponding geometry vertices on the source.

Click the **Active** button to toggle between turning ON and OFF selections. Select the boundaries to copy the mesh from in the **Graphics** window.

> The source boundaries must be connected when the **Single destination (many-to-one)** option is specified as the **Type of Copy**. In an assembly, an identity pair is not sufficient to connect boundaries across parts. Instead, consider forming a union of the parts or splitting the destination boundary (using imprints, for example) so that the mesh copy is a one-to-one copy operation using two or more **Copy Face** nodes.

TYPE OF COPY

See Copy Domain for settings information.

SWITCH SELECTIONS

See Copy Domain for settings information.

CONTROL ENTITIES

See Copy Domain for settings information.

> The Copy Edge feature has an orientation section. To control the orientation of the source mesh on the destination when using the **Copy Face** node, right-click and add an Edge Map, One-Point Map, or Two-Point Map node as a local attribute.

Copy

For meshing sequences that are based upon a geometry, use a **Copy** node ( ) to copy meshes within the same meshing sequence or between different meshing sequences (belonging to the same or different components). The dimension of the source meshing sequence must be less than or equal to the dimension of the destination meshing sequence. You can also copy a mesh from a mesh part.

The Copy feature can be useful if you start off with an imported mesh and then want to modify it by adding a boundary layer mesh or running a solver that modifies it, such as the adaptive solver. It also makes it possible to add geometry, such as for defining a surrounding domain, to an imported mesh while still keeping the imported mesh on the "original geometry". Use the following steps to copy an imported mesh into another component's geometry:

1. Import a mesh to an empty component or create a mesh part.
2. Add a new component in which you import the mesh as a geometry.
3. Add more geometry if desired.
4. In the new component's meshing sequence, add a Copy feature that makes it possible to copy the imported mesh into this mesh.

5 Generate mesh on the additional geometry added in Step 3 or modify the mesh inserted in Step 4.

Enter the properties for the mesh copying operation using the following sections:

SOURCE MESH

From the **Mesh** list, select the meshing sequence or mesh part to copy from (or **None**, which is the default in 1D); then (for meshing sequences only) click **Copy** to copy the updated source mesh. By default, the meshing sequence in which the **Copy** node resides is selected. When this sequence is selected, the **Copy** button is unavailable. If you have parameterized the geometry or mesh and plan to run a parametric sweep, select the **Build source mesh automatically** check box to ensure that the source mesh and geometry are updated before copying. Otherwise, you have to manually rebuild the source mesh and click the **Copy** button if you want to use an updated source mesh. Click the **Go to Source** button ( ) to move to the main **Mesh** node of the source mesh.

The sections below are available for 2D and 3D meshes only.

DIMENSION

Select the geometric entity level of the copy from the **Geometric entity level** list. The possible choices are **Entire geometry**, **Domain** (the default), **Boundary**, or **Edge** (3D only). For **Entire geometry**, the sections below are not available.

SOURCE ENTITIES

Use this section to select the entities to copy mesh from in the specified source mesh. From the **Selection** list, choose **All domains** (for example) or choose **Manual** to pick the entities from the **Graphics** window. Click the **Active** button to toggle between turning ON and OFF selections. Select the entities to copy the mesh from in the **Graphics** window. If you activate this selection, the **Graphics** window shows the mesh of the source sequence such that you can select entities in this mesh.

Click the **Swap Source and Destination** button ( ) to swap the entities in the source list above and the entities in the destination list in the **Destination Entities** section below.

DESTINATION ENTITIES

This section is similar to the **Source Entities** section above, but you use it to define the geometric entities in the destination to which you want to copy the mesh.

TYPE OF COPY

See Copy Domain for settings information.

CONTROL ENTITIES

See Copy Domain for settings information.

Distribution

Use the **Distribution** node ( ) to specify the distribution of mesh elements along an edge, for example. It is possible to add **Distribution** nodes both as global nodes and as local nodes. If there are several **Distribution** nodes in the sequence with a nonempty selection intersection, the mesher uses properties corresponding to the last **Distribution** node in the sequence. Distribution properties always override properties defined by **Size** nodes sharing the same selections.

- In the **Mesh** ribbon toolbar (Windows), from the **Operations>Modify** ( ) menu choose **Size>Distribution**.
- In the **Mesh** contextual toolbar (macOS and Linux), from the **Modify** ( ) menu choose **Size>Distribution**.
- To add it as a global node, right-click a **Mesh** node and select **Distribution**. To add it as a subnode to an operation node, right-click a Mesh Operations node and select **Distribution**. See Global vs. Local Attribute Nodes.

GEOMETRIC SCOPE (3D) / BOUNDARIES (2D) / DOMAIN SELECTION (1D)

Define the geometric entities where you want to specify a distribution. Choose the level of the geometry from the **Geometric entity level** list (only available in 3D):

- Choose **Domain** to specify the domains for the distribution. Choose **Manual** from the **Selection** list to select the domains in the **Graphics** window, or choose **All domains** to select all domains.
- Choose **Edge** to specify the edges for the distribution. Choose **Manual** from the **Selection** list to select the edges in the **Graphics** window, or choose **All edges** to select all edges.

Edge is the only option in 2D, and **Domain** is the only option in 1D.

DISTRIBUTION

There are three main types of distribution methods that you select from the **Distribution types** list:

- Select **Explicit** to use an explicit, user-defined element distribution. To define the distribution of mesh elements, enter a vector-valued expression defining a strictly increasing sequence of nonnegative numbers (using comma-separated numbers) in the **Relative placement of vertices along edge** field, specifying the relative arc length values of the mesh vertices along the edge or boundary. Select the **Reverse direction** check box to reverse the direction of the explicit distribution.
- Select **Fixed number of elements** to use a fixed number of mesh elements, which you enter into the **Number of elements** field. This is the default option.
- Select **Predefined** to specify properties of a predefined distribution method that can be a geometric sequence (exponentially increasing or decreasing element size) or an arithmetic sequence (equal distance between elements); see below for details.

Settings for the Predefined Distribution Type

In the **Number of elements** field, enter the number of elements (the default is 5 elements). To specify the ratio in size between the last element and first element in the distribution, use the **Element ratio** field (the default value is 1.0; that is, the first and the last elements have the same size). From the **Growth formula** list, select **Arithmetic sequence** for a linear element distribution or select **Geometric sequence** for an exponential element distribution. Select the **Symmetric distribution** check box to get a symmetric distribution of elements, and select the **Reverse direction** check box to switch the element distribution to the opposite direction along the edge or boundary. If you have specified several edges in the selection, the **Reverse direction** check box refers to the edge in the selection with the lowest entity number (the *master edge* in the selection). For the other edges, their direction (with respect to the distribution) is such that the rotation with respect to the master edge is minimized.

Meshing Operations and Attributes

Edge

Add an **Edge** node ( ) to mesh edges. You can control the number of elements and the distribution of elements in the edge mesh by using Size and Distribution nodes.

To create an edge mesh:

- In the **Mesh** ribbon toolbar (Windows), from the **Generators>Boundary** ( ) menu choose **Edge**.
- From the **Mesh** contextual toolbar (macOS and Linux), choose **Edge** from the **Boundary** menu ( ) (3D components) or click **Edge** (2D or 1D components).
- Right-click a **Mesh** node and choose **More Operations>Edge**.

Then enter the properties using the following sections:

EDGES (3D) / BOUNDARIES (2D) / DOMAINS (1D)

To define the edges where you want a create a mesh, first choose the level of the geometric entities from the **Geometric entity level** list:

- Choose **Entire geometry** to specify an edge mesh for the entire geometry.
- Choose **Remaining** to specify an edge mesh for remaining, unmeshed edges.
- Choose **Edge** (3D), **Boundary** (2D), or **Domain** (1D) to specify the edges for which you want to create a mesh. Choose **Manual** in the **Selection** list to select the edges in the **Graphics** window or choose **All edges** (3D), **All boundaries** (2D), or **All domains** (1D) to select all edges.

CONTROL ENTITIES

Select the **Smooth across removed control entities** check box to smooth the transition in element size across removed control entities. You can specify the number of smoothing iterations in the **Number of iterations** field. In the **Maximum element depth to process** field you can specify the maximum element depth, from the boundary layer interface, for the mesh points to be smoothed.

Edge Groups

Use an **Edge Groups** node ( ) to specify the four groups of edges around a boundary (3D) or domain (2D) that are used to determine the Mapped mesh of the boundary/domain.

For all the settings sections, click the **Active** button to toggle between turning ON and OFF selections.

To add this node, right-click Mapped and select **Edge Groups**. Then enter the properties using the following sections:

BOUNDARIES (3D) / DOMAIN SELECTION (2D)

Define the boundary/domain where you want to specify the edge groups. Choose **Manual** in the **Selection** list to select the boundary/domain in the **Graphics** window.

FIRST EDGE GROUP

Activate the **First Edge Group** list and select the edges for the first edge group in the **Graphics** window.

SECOND EDGE GROUP

Activate the **Second Edge Group** list and select the edges for the second edge group in the **Graphics** window.

THIRD EDGE GROUP

Activate the **Third Edge Group** list and select the edges for the third edge group in the **Graphics** window.

FOURTH EDGE GROUP

Activate the **Fourth Edge Group** list and select the edges for the fourth edge group in the **Graphics** window.

Edge Map

Use an **Edge Map** node ( ) to specify the orientation of the source mesh on the destination for a Copy Face or a Copy Domain node. Using this node, the source mesh of the Copy Face or Copy Domain operation is transformed so that the source edge of the Edge Map node is mapped onto the destination edge of the Edge Map node with the specified orientation.

EDGES

Click the **Active** button to toggle between turning ON and OFF selections.

- Activate the **Source edge** list and select the edge that you want to define as the source edge in the **Graphics** window.
- Activate the **Destination edge** list and select the edge that you want to define as the destination edge in the **Graphics** window.

ORIENTATION

Select **Automatic orientation** to let the software determine the orientation of the mesh of the source edge on the destination edge (this is the default), select **Same orientation** to let the mesh of the source edge be copied to the destination edge according to the directions of the edges, or select **Opposite orientation** to let the mesh of the source edge be copied to the destination edge in the opposite direction.

Free Quad

Add a **Free Quad** node ( ) to create an unstructured quadrilateral mesh on boundaries in 3D and domains in 2D. You can control the number, size, and distribution of elements by using Size and Distribution nodes.

To create an unstructured quadrilateral mesh:

- In the **Mesh** ribbon toolbar (Windows), from the **Generators>Boundary** ( ) menu choose **Free Quad**.
- From the **Mesh** contextual toolbar (macOS and Linux), choose **Free Quad** from the **Boundary** menu ( ) (3D components) or click **Free Quad** (2D components).
- Right-click a **Mesh** node and choose **Free Quad**. For 3D components, this is selected from the **More Operations>** menu.

	The quadrilateral mesh generator does not strictly create only quadrilateral elements. In places of the geometry where it judges it as necessary, it can also create triangular elements.

Then enter the properties for the quadrilateral meshing operation using the following sections:

BOUNDARIES (3D) / DOMAINS (2D)

Define the boundaries (3D) or domains (2D) where you want to create an unstructured quad mesh. Choose the level of the geometry from the **Geometric entity level** list:

- Choose **Remaining** to specify unstructured quad mesh for remaining, unmeshed domains.
- Choose **Entire geometry** to create an unstructured quad mesh in the entire geometry.
- Choose **Boundary** (3D) or **Domain** (2D) to specify the geometric entities for which you want to create an unstructured quad mesh. Choose **Manual** in the **Selection** list to select the boundaries or domains in the **Graphics** window or choose **All boundaries** (3D) or **All domains** (2D) to select all boundaries or all domains.

SCALE GEOMETRY

To scale the geometry during the meshing operation, change the x-scale, y-scale, and z-scale in 3D to positive real numbers. If any of the scale factors are not equal to one, the software scales the geometry in the x, y, and z directions before meshing; after meshing, it restores the geometry and mesh to fit the original size. The scale factors make it possible to generate meshes that are anisotropic. They are also useful if the mesh generator creates many elements due to a thin geometry or if the mesh generation fails due to large aspect ratios in the geometry.

CONTROL ENTITIES

Select the **Smooth across removed control entities** check box to smooth the transition in element size across removed control entities. You can specify the number of smoothing iterations in the **Number of iterations** field. In the **Maximum element depth to process** field you can specify the maximum element depth, from the boundary layer interface, for the mesh points to be smoothed.

TESSELLATION

From the **Method** list, choose the tessellation method to use for creating an unstructured quadrilateral mesh:

- Select **Automatic** (the default) to make the mesh generator determine the best algorithm to use for each domain.
- Select **Legacy version 5.2** to use the algorithm available in version 5.2 and earlier versions of COMSOL Multiphysics.
- Select **Legacy version 5.2a** to use the algorithm available in version 5.2a of COMSOL Multiphysics, which, in addition to earlier versions of the free quad algorithm, has support for templates.
- Select **Legacy version 5.4** to use the algorithm available in version 5.4 of COMSOL Multiphysics.

Free Tetrahedral

Add a **Free Tetrahedral** node ( ) to create an unstructured tetrahedral mesh. If no selection is specified, this feature creates a mesh on the remaining domains, boundaries, edges and points. You can control the number, size, and distribution of elements by using Size and Distribution subnodes.

To create an unstructured tetrahedral mesh for a domain selection:

- In the **Graphics** window, select the domains. In the **Mesh** ribbon toolbar (Windows) or from the **Mesh** contextual toolbar (macOS and Linux), click the **Free Tetrahedral** ( ) button.

  Then choose the menu item corresponding to the desired predefined element size, for example, Normal. The software creates the resulting tetrahedral mesh by adding and building a Free Tetrahedral node, using the selected domains with a Size node, and using the selected predefined element size added as a subnode. Alternatively, you can click the button associated with the menu button. Then COMSOL Multiphysics uses the last selected menu item (or Free Tetrahedral (Normal)), as indicated by the tooltip. If you use this menu button with an empty selection, the software meshes the remaining, unmeshed geometry.
- Right-click a **Mesh** node and choose **Free Tetrahedral**.

Then define the properties for the tetrahedral meshing operation using the following sections:

DOMAIN SELECTION

Define the domains where you want to create an unstructured tetrahedral mesh. Choose the level of the geometry from the **Geometric entity level** list:

- Choose **Remaining** to specify unstructured tetrahedral mesh for remaining, unmeshed domains.
- Choose **Entire geometry** to create an unstructured tetrahedral mesh in the entire geometry.
- Choose **Domain** to specify the domains for which you want to create an unstructured tetrahedral mesh. Choose **Manual** in the **Selection** list to select the domains in the Graphics window or choose **All domains** to select all domains.

SCALE GEOMETRY

To scale the geometry during the meshing operation, change the x-scale, y-scale, and z-scale to positive real numbers. If any of the scale factors are not equal to one (1), the software scales the geometry in the x, y, and z directions before meshing. After meshing, it restores the geometry and mesh to fit the original size. The scale

factors make it possible to generate meshes that are anisotropic, and they are useful if the mesh generator creates many elements due to a thin geometry or if the mesh generation fails due to large aspect ratios in the geometry.

CONTROL ENTITIES

Select the **Smooth across removed control entities** check box to smooth the transition in element size across removed control entities. You can specify the number of smoothing iterations in the **Number of iterations** field. In the **Maximum element depth to process** field you can specify the maximum element depth, from the boundary layer interface, for the mesh points to be smoothed.

TESSELLATION

From the **Method** list, choose the Delaunay tessellation method to use for creating a tetrahedral mesh:

- Select **Automatic** (the default) to make the mesh generator determine the best algorithm to use for each domain.
- Select **Delaunay** to use a version of the Delaunay algorithm that under some conditions can modify the boundary mesh to simplify the meshing.
- Select **Delaunay (legacy version)** to use the Delaunay algorithm available in earlier versions of COMSOL Multiphysics. This is also the method that will be used if you open a model created using an earlier version of COMSOL Multiphysics.

ELEMENT QUALITY OPTIMIZATION

In this section, you can control how much effort COMSOL Multiphysics puts into optimizing the element quality and tuning the optimization for certain situations. From the **Optimization level** list, choose one of the following levels:

- **Basic** (the default), which makes basic optimizations aiming at a minimal element quality of 0.2.
- **Medium**, which makes more optimization and aims at a minimal element quality of 0.35,
- **High**, which attempts all available optimization operations. If the quality of the surface mesh is low (typically due to small details or narrow corners in the geometry), this setting can take a significant amount of time.

There are additional settings under **Accept lower element quality to** that you can use if you then accept a lower mesh element quality:

- If the geometry includes fillets or other curved regions with a relatively coarse mesh, and you solve with a geometry shape order higher than one, you can select the **Avoid inverted curved elements** check box. This setting makes the optimization try to reduce the number of mesh elements that become inverted when they are curved. The cost of this optimization is longer meshing time and often a slightly higher number of mesh elements and a lower element quality.

	If curved mesh elements become inverted, the following message appears in the **Messages** window: **Used linear geometry shape in N mesh elements to avoid inverted curved elements** (where N is the number of inverted elements).

- If the computation is sensitive to too large mesh elements, you can select the **Avoid too large elements** check box. For each mesh element, there is a desired element size (h), specified by the mesh size parameters, and if the element is larger than that, COMSOL Multiphysics tries to make it smaller. The cost for this option is longer meshing time and a lower element quality. If you evaluate the maximum of h on a sufficiently large mesh of uniform size, this value is typically decreased by 10 percent if you have selected this option.
- Select the **Avoid too small elements** check box to optimize the mesh so that the diameter of the inscribed sphere of each element is maximized while still trying to respect the desired local element size. Optimizing this

parameter can improve performance when solving problems using the discontinuous Galerkin method. The optimization level controls how much effort is put into this optimization.

	For a tutorial about free meshing and mesh sizing, see *Free Tetrahedral Meshing of a Piston Geometry*, Application Library path: **COMSOL_Multiphysics/Meshing_Tutorials/piston_mesh**.

Free Triangular

Add a **Free Triangular** node ( ) to create an unstructured triangular mesh on boundaries in 3D and domains in 2D. You can control the number, size, and distribution of elements by using Size and Distribution nodes.

To create an unstructured triangular mesh:

- In the **Mesh** ribbon toolbar (Windows), from the **Generators>Boundary** ( ) menu choose **Free Triangular**.
- From the **Mesh** contextual toolbar (macOS and Linux), choose **Free Triangular** from the **Boundary** menu ( ) (3D components) or click **Free Triangular** for 2D components.
- Right-click a **Mesh** node and choose **Free Triangular**. For 3D components, this is selected from the **More Operations>** menu.

Then enter the properties for the triangular meshing operation using the following sections:

BOUNDARIES (3D) / DOMAIN SELECTION (2D)

Define the boundaries (3D) or domains (2D) where you want to create an unstructured triangular mesh. Choose the level of the geometry from the **Geometric entity level** list:

- Choose **Remaining** to specify unstructured triangular mesh for remaining, unmeshed domains.
- Choose **Entire geometry** to create an unstructured triangular mesh in the entire geometry.
- Choose **Boundary** (3D) or **Domain** (2D) to specify the geometric entities for which you want to create an unstructured triangular mesh. Choose **Manual** in the **Selection** list to select the boundaries or domains in the **Graphics** window or choose **All boundaries** (3D) or **All domains** (2D) to select all boundaries or all domains.

SCALE GEOMETRY

To scale the geometry during the meshing operation, change the x-scale, y-scale, and z-scale in 3D to positive real numbers. If any of the scale factors are not equal to one (1), the software scales the geometry in the x, y, and z directions before meshing. After meshing, it restores the geometry and mesh to fit the original size. The scale factors make it possible to generate meshes that are anisotropic, and they are useful if the mesh generator creates many elements due to a thin geometry or if the mesh generation fails due to large aspect ratios in the geometry.

CONTROL ENTITIES

Select the **Smooth across removed control entities** check box to smooth the transition in element size across removed control entities. You can specify the number of smoothing iterations in the **Number of iterations** field. In the **Maximum element depth to process** field you can specify the maximum element depth, from the boundary layer interface, for the mesh points to be smoothed.

TESSELLATION

Here you can specify the triangulation method used when creating the triangular mesh. Select **Automatic** (default) to let the software use the method that is best suited for the geometry, select **Delaunay** to use a method based on a Delaunay algorithm, or select **Advancing front** to use a method based on an advancing front algorithm.

Mapped

Add a **Mapped** node ( ) to create a structured quadrilateral mesh on boundaries in 3D and domains in 2D. You can control the number, size, and distribution of elements using Size (only the Maximum element size parameter is used) and Distribution subnodes.

To create a mapped quadrilateral mesh for each domain, the mapped mesher maps a regular grid defined on a logical unit square onto each domain. The mapping method is based on transfinite interpolation. The settings in the Size and Distribution nodes used by a Mapped node determine the density of the logical meshes. For the mapping technique to work, the opposite sides of each logical unit square must be discretized by the same number of edge elements.

By default, the relationship between the four sides of the logical unit square and the boundaries around a domain is based on a criterion related to the sharpest angle between boundaries. If you want to control this relationship, right-click the **Mapped** node to add an Edge Groups subnode.

2D Mapped Mesh Geometry

For the 2D mapped meshing technique to work properly, the geometry must be reasonably regular. The following conditions must be satisfied:

- Each domain must be bounded by at least four boundary segments.
- Each domain must be bounded by only one connected boundary component (that is, no holes are allowed).
- The domains must not contain isolated or embedded vertices or boundary segments.
- The shape of each domain must not differ significantly from a rectangle.

For a geometry model that does not initially meet these criteria, it is usually possible to modify it so that a mapped mesh is generated, for example, by splitting it into simpler domains.

To create a mapped quadrilateral mesh:

- In the **Mesh** ribbon toolbar (Windows), from the **Generators>Boundary** ( ) menu choose **Mapped**.
- From the **Mesh** contextual toolbar (macOS and Linux), choose **Mapped** from the **Boundary** menu ( ) (3D components) or click **Mapped** (2D components).
- Right-click a **Mesh** node and choose **Mapped**. For 3D models, this is selected from the **More Operations>** menu.

Then enter the properties for the mapped meshing operation using the following sections:

BOUNDARIES (3D) / DOMAIN SELECTION (2D)

Define the boundaries (3D) or domains (2D) where you want to create a mapped quad mesh. Choose the level of the geometry from the **Geometric entity level** list:

- Choose **Remaining** to specify mapped quad mesh for remaining, unmeshed domains.
- Choose **Entire geometry** to create a mapped quad mesh in the entire geometry.
- Choose **Boundary** (3D) or **Domain** (2D) to specify the geometric entities for which you want to create a mesh. Choose **Manual** from the **Selection** list to select the boundaries or domains in the **Graphics** window or choose **All boundaries** (3D) or **All domains** (2D) to select all boundaries or all domains.

CONTROL ENTITIES

Select the **Smooth across removed control entities** check box to smooth the transition in element size across removed control entities. You can specify the number of smoothing iterations in the **Number of iterations** field. In the **Maximum element depth to process** field you can specify the maximum element depth, from the boundary layer interface, for the mesh points to be smoothed.

REDUCE ELEMENT SKEWNESS

Select the **Adjust edge mesh** check box to allow the mapped mesher to adjust the mesh on edges that are not already meshed and where no explicit distribution is applied in order to reduce the element skewness.

ADVANCED SETTINGS

Available in 3D only, in this section you can choose between two different interpolation methods in the **Interpolation method** list. This specifies how the mapped meshing operation determines the positions of the interior mesh points. If you select **Transfinite in 2D**, the positions of the interior mesh points are determined by transfinite interpolation in the 2D parameter space of the corresponding surface, and if you select **Transfinite in 3D**, transfinite interpolation is done in 3D to determine these positions. Select **Automatic** to let the mapped meshing operation determine a suitable interpolation method automatically.

	For an example of a 2D mapped mesh, see *Tubular Reactor with Nonisothermal Cooling Jacket*: Application Library path **COMSOL_Multiphysics/Chemical_Engineering/tubular_reactor**.

One-Point Map

Use a **One-Point Map** node ( ) to specify the orientation of the source mesh on the destination for a Copy Face or a Copy Domain node.

To add this subnode, right-click the Copy Face or Copy Domain node and select **One-Point Map** from the context menu. Then enter the properties using the following sections:

POINT SELECTION

Click the **Active** button to toggle between turning ON and OFF selections.

- Activate the **Point on source** list and select the point that you want to define as source point in the **Graphics** window.
- Activate the **Point on destination** list and select the point that you want to define as destination point in the **Graphics** window.

Reference

Use a **Reference** node ( ) to refer to another meshing sequence. Building a **Reference** node runs the operation nodes of the referenced sequence. If you have a Scale node before a **Reference** node, or as a subnode to a **Reference** node, you can create a finer or coarser version of the mesh generated by the referenced sequence.

To refer to another meshing sequence:

- In the **Mesh** toolbar from the **Modify** menu, select **Reference** ( ).
- Right-click a **Mesh** node and select **Reference** in the **More Operations** submenu.

Then use the following section to specify the sequence to reference:

REFERENCE

Select the meshing sequence to reference.

It is possible to *expand* a reference (that is, replacing the reference with a copy of the referred sequence). If the reference node has a **Scale** subnode, the attribute nodes in the expanded sequence are scaled accordingly. In some cases, such scaling of attributes cannot be done explicitly, and additional scale nodes are created instead.

To expand a reference, right-click a reference node and select **Expand** ( ).

Refine

Use a **Refine** ( ) node to refine a mesh by splitting elements.

To refine a mesh:

- In the **Mesh** ribbon toolbar (Windows), from the **Operations>Modify** ( ) menu choose **Elements>Refine** ( ).
- In the **Mesh** contextual toolbar (macOS and Linux), from the **Modify>Elements** menu choose **Refine** ( ).
- Right-click a 2D or 3D **Mesh** node and from the **More Operations** submenu select **Refine**. In 1D, select **Refine** directly from the context menu.

Then use the following sections to specify the parts of the mesh to refine and the method used to refine the elements:

DOMAIN SELECTION

Define the domains where you want to refine the mesh. Choose the level of the geometry from the **Geometric entity level** list:

- Choose **Entire geometry** to refine the entire mesh.
- Choose **Domain**, **Boundary** (2D and 3D), or **Edge** (3D only) to specify the domains, boundaries, or edges for which you want to refine the mesh. Choose **Manual** from the **Selection** list to select the domains, boundaries, or edges in the **Graphics** window; choose **All domains**, **All boundaries**, or **All edges** to select all domains, all boundaries, or all edges, respectively; or choose any applicable user-defined selection available in the list.

REFINE OPTIONS

Refinement Method

From the **Refinement method** list, select **Regular refinement** or **Split longest side**. The regular refinement method bisects each edge of the element. The result is (with one exception) 2^(element dimension) new elements of the same type. For example, a triangle is split into four triangles; a prism element is split into eight prisms. The pyramid element is the exception: It is split into six pyramids and four tetrahedra. The longest side refinement method bisects the longest edge of each element. This method is generally not suitable for nonsimplex meshes because the refinement destroys the structured nature of such meshes; if you bisect one edge of a regular quad element, you get a triangle and a rather skewed quad element. For 1D elements, these methods are equivalent. For 1D models, this option is excluded.

Number of Refinements

Choose the number of consecutive mesh refinements from the **Number of refinements** list (the default is one refinement).

	If you want to control the refinement by an element size expression rather than a fixed factor, you can use the **Adapt** node (see Adapt).

REFINE ELEMENTS IN BOX

Check **Specify bounding box** to refine the mesh only within a box. If you refine the mesh only on certain domains, the mesh is refined only in the intersection between the box and the domains.

Specify the box either by entering the coordinates of the lower-left corner and upper-right corner of the box or click **Draw box** to interactively specify the box (only available in 2D).

Scale

Use a **Scale** node ( ) to scale the properties of the Size, Distribution, and Boundary Layer Properties nodes. It is possible to add Scale nodes both as global nodes and as local nodes to Reference nodes. A Scale node that exists as a global node affects the size of the mesh elements generated by the subsequent operation nodes. A Scale node that exists as a subnode to a Reference node affects the size of the mesh elements generated by the Reference node only.

If two or more Scale nodes exist on the same selection, the resulting scale factor on that selection is the product of the given scale factors.

- To add this as a global node, in the **Mesh** toolbar from the **Modify** menu, select **Scale** ( ).
- To add this as a subnode, right-click a Reference node and select **Scale**. See also Global vs. Local Attribute Nodes.

GEOMETRIC SCOPE

In this section you define the geometric entities where you want to specify a scale. Choose the level of the geometry from the **Geometric entity level** list.

- Choose **Entire geometry** to specify the scale for the entire geometry.
- Choose **Domain** to specify the domains for the scale specification. Choose **Manual** from the **Selection** list to select the domains in the **Graphics** window or choose **All domains** to select all domains.
- Choose **Boundary** to specify the boundaries for the scale specification. Choose **Manual** from the **Selection** list to select the boundaries in the **Graphics** window or choose **All boundaries** to select all boundaries.
- Choose **Edge** to specify the edges for the scale specification. Choose **Manual** from the **Selection** list to select the edges in the **Graphics** window or choose **All edges** to select all edges. This option is only available in 3D.
- Choose **Point** to specify the points for the scale specification. Choose **Manual** from the **Selection** list to select the points in the **Graphics** window or choose **All points** to select all points. This option is only available in 2D and 3D.

SCALE

Specify the scale factor in the **Element size scale** field.

A scale factor less than 1 gives smaller (more) elements; a scale greater than 1 gives larger (fewer) elements.

	It is not possible to use a coarser mesh size setting on a geometric entity adjacent to a higher dimensional entity with a finer mesh size setting; the finer setting on a geometric entity overrides the coarser setting on its boundary. Therefore a scale factor larger than 1 might have no effect if the dimensional level of the selection is less than the space dimension.

Size

Use a **Size** node ( ) to specify the size of mesh elements. It is possible to add Size nodes both as global nodes and as local nodes. If there are several Size nodes in the sequence with a nonempty selection intersection, the mesher uses properties corresponding to the last Size node in the sequence.

A meshing sequence corresponding to a nonempty geometry contains a Size node at the first position in the sequence. This Size node, referred to as the *default Size node*, is defined for the entire geometry and cannot be removed. To override the mesh size settings defined by this Size node, add another Size node to the sequence.

To add this node as a global node, right-click a **Mesh** node and select **Size**. To add this as a subnode, right-click a Mesh Operations node and select **Size**. Also see Global vs. Local Attribute Nodes.

GEOMETRIC ENTITY SELECTION

This section is not available for the default Size node.

In this section you define the geometric entities where you want to specify a size. Choose the level of the geometry from the **Geometric entity level** list:

- Choose **Entire geometry** to specify the size for the entire geometry.
- Choose **Domain** to specify the domains for the size specification. Choose **Manual** from the **Selection** list to select the domains in the **Graphics** window or choose **All domains** to select all domains.
- Choose **Boundary** to specify the boundaries for the size specification. Choose **Manual** from the **Selection** list to select the boundaries in the **Graphics** window or choose **All boundaries** to select all boundaries.
- Choose **Edge** (3D only) to specify the edges for the size specification. Choose **Manual** from the **Selection** list to select the edges in the **Graphics** window or choose **All edges** to select all edges. This option is only available in 3D.
- Choose **Point** to specify the points for the size specification. Choose **Manual** from the **Selection** list to select the points in the **Graphics** window or choose **All points** to select all points. This option is only available in 2D and 3D.

ELEMENT SIZE

In the **Calibrate for** list, select the physics node for which the element size is calibrated. The options available in some cases require module-dependent physics interfaces as indicated. In all cases, the default values for the **Element Size Parameters** are adjusted for the type of problem being solved.

- For any module, **General physics** and **Fluid dynamics** are options.
- If you have the Plasma Module and are using one of its plasma interfaces, choose **Plasma** from the **Calibrate for** list.
- If you have the Semiconductor Module and are using the Semiconductor interface, choose **Semiconductor** from the **Calibrate for** list.

The default element size is **Predefined** and set as **Normal**. See Mesh Element Quality and Size and Predefined Mesh Element Sizes for details about the options. This automatically determines the parameters that you can otherwise customize under **Element Size Parameters**.

Select **Custom** if you want to change the value for any parameters in the **Element Size Parameters** section.

ELEMENT SIZE PARAMETERS

This section is available when **Custom** is selected as the **Element Size**. Specify all element size parameters using numerical values or user-defined parameters.

Except for the default **Size** node, if you select a **Custom** element size above, the check boxes are automatically added next to each field. Click to select a check box to activate, and edit, the corresponding parameter.

The following parameters control the mesh element size (the parameters where you define a size use the geometry's length unit). Defaults vary based on whether it is a default node or not. Edit the default values as required for the following fields:

- **Maximum element size**: Use this parameter to limit the allowed element size, for example, if you want to limit the maximum element size to a fraction of the wavelength to make sure that the wave propagation is fully resolved.

By using a parametric sweep to vary the maximum element size, you can solve the model using meshes with different mesh density to study how it affects the solution.

- **Minimum element size**: Use this parameter to specify the minimum allowed element size. You can use this value to, for example, prevent the generation of many elements around small curved parts of the geometry. If some details of the geometry are smaller than the minimum element size, the mesh will contain elements of a smaller size in order to resolve the geometry. This parameter is not available in 1D.
- **Maximum element growth rate**: Use this parameter to determine the maximum rate at which the element size can grow from a region with small elements to a region with larger elements. The value must be greater or equal to one. For example, with a maximum element growth rate of 1.5, the element size can grow by at most 50% (approximately) from one element to another.
- **Curvature factor**. Use this parameter to determine the size of boundary elements compared to the curvature of the geometric boundary (that is, the ratio between the boundary element size and the curvature radius). The curvature radius multiplied by the *curvature factor*, which must be a positive scalar, gives the maximum allowed element size along the boundary. A smaller curvature factor gives a finer mesh along curved boundaries. This parameter is not available in 1D.

Resolution of narrow regions: Use this parameter to control the number of layers of elements that are created in narrow regions (approximately). The value must be a nonnegative scalar. A higher value gives a finer mesh in narrow regions. If the value of this parameter is less than one, the mesh generator might create elements that are anisotropic in size in narrow regions.

There is no guarantee that all mesh elements in the generated mesh strictly fulfill the size constraints given by the specified element size parameters.

It is not possible to use a coarser mesh size setting on a geometric entity adjacent to a higher dimensional entity with a finer mesh size setting; the finer setting on a geometric entity overrides the coarser setting on its boundary. A warning is given when coarser settings are overridden.

Meshing Operations and Attributes

Size Expression

Use a **Size Expression** node ( ) to specify the size of mesh elements as an expression evaluated on a grid, a computed solution, or a temporary solution corresponding to the initial value of a study step. It is possible to add a **Size Expression** node both as a global node and as a local node. Free triangular, tetrahedral, and quadrilateral mesh operations that follow below the **Size Expression** node in the meshing sequence take the size expression into account.

For some types of adaptation and error estimation in the study settings (using mesh initialization), the adaptive solver add a **Size Expression** node to the meshing sequences that represent the adaptive mesh generation, but you can also add a **Size Expression** node to set up a mesh size expression of your choice. Right-click a **Mesh** node to add a **Size Expression** node from the context menu.

Only one **Size Expression** node per meshing sequence is supported.

To add this node as a global node, right-click a **Mesh** node and select **Size Expression**. To add this as a subnode, right-click a Mesh Operations node and select **Size Expression**. Also see Global vs. Local Attribute Nodes.

GEOMETRIC ENTITY SELECTION

In this section you define the geometric entities where you want to specify a size expression. Choose the level of the geometry from the **Geometric entity level** list:

- Choose **Entire geometry** to specify the size expression for the entire geometry.
- Choose **Domain** to specify the domains for the specification of the size expression. Choose **Manual** from the **Selection** list to select the domains in the **Graphics** window or choose **All domains** to select all domains.
- Choose **Boundary** to specify the boundaries for the specification of the size expression. Choose **Manual** from the **Selection** list to select the boundaries in the **Graphics** window or choose **All boundaries** to select all boundaries.
- Choose **Edge** (3D only) to specify the edges for the specification of the size expression. Choose **Manual** from the **Selection** list to select the edges in the **Graphics** window or choose **All edges** to select all edges. This option is only available in 3D.
- Choose **Point** to specify the points for the specification of the size expression. Choose **Manual** from the **Selection** list to select the points in the **Graphics** window or choose **All points** to select all points. This option is only available in 2D and 3D.

ELEMENT SIZE EXPRESSION

From the **Evaluate on** list, choose **Grid** (the default), **Solution,** or **Initial expression** to specify whether the evaluation is done on a grid, a solution, or an expression evaluated using initial values.

Evaluation on a Grid

Use the **Size expression** field to enter an expression for the absolute element size as a function of x, y, and z (depending on the space dimension). You can also use parameters and global functions, variables, and materials in the expression, but no features from the component are available. The actual size used in a coordinate is the minimum of the specified size expression and the result of the other size parameters (such as the maximum element size and the curvature factor), but this minimum is cut off by the specified minimum element size on a given entity, which acts as a lower bound. If the expression evaluates to something smaller than the minimum element size, you get a warning that the value was cut off.

	The **Size expression** field uses the unit system defined by the component. The evaluated value of the expression is interpreted as a length in the geometry's unit system.

	Size expressions that can be evaluated on boundaries only cannot be used for geometries with domains, even if they are applied only on the boundary.

To control the grid, you can specify the **Grid type**, which can be **Resolution**, where you specify the number of isotropic cells per dimension in the grid in the **Number of cells per dimension** field, or **Cell size**, where you specify the side length of a grid cell in the **Side length** field.

Evaluation on a Solution

From the **Solution** list, select the solution to use for evaluation.

From the **Solution selection** list, select which solution that should be used to evaluate error estimates:

- Select **Use last** to use the last solution.
- Select **Use first** to use the first solution.

- Select **All** (the default for Eigenvalue studies) to use all solutions from that study.
- Select **Manual** to use a specific solution number that you specify as solution indices in the **Index** field.

In the **Weights** field (only available when **Solution selection** is **Manual** or **All**), enter weights as a space-separated list of positive (relative) weights so that the error estimate is a weighted sum of the error estimates for the various solutions (eigenmodes). The default value is 1, which means that all the weight is put on the first solution (eigenmode). That is, any omitted weight components are treated as zero weight.

From the **Type of expression** list, choose **Error indicator** (the default) or **Absolute size**.

Error Indicator

If you select **Error indicator**, the following settings appear:

The **Error expression** list, where you can add expressions for the error, for example, in terms of the dependent variables (including the variables for error estimation). You can use any expression, including field variables and their derivatives, defined in the domain. Use the **Move Up** ( ), **Move Down** ( ), **Add** ( )and **Delete** ( ) buttons as needed. If you use several expressions, such as one for each solution component, the error expressions are added to form the sum of all of them. Or right-click a table cell and select **Move Up**, **Move Down**, **Add**, or **Delete**.

In 2D, use the **Refinement method** list to control how to refine mesh elements. Select:

- **Longest** to make the solver refine only the longest edge of an element.
- **Regular** to make the solver refine elements in a regular pattern.

Use the **Element selection** list to specify how the element refinement vector is determined from the error expression. Select:

- **Rough global minimum** to minimize the L_2 norm of the error by refining a fraction of the elements with the largest error in such a way that the total number of elements increases roughly by a factor greater than 1 specified in the accompanying **Element growth rate** field. The default value is 1.7, which means that the number of elements increases by roughly 70%. The **Error orders** field is an array of h-exponents for the decrease of the error expression. This array has the same indexing as the error expression's indexing. (for an error expression with two expressions such as `errexpr1`, `errexpr2` and error orders = 2, 3, it means that `errexpr1` = $O(h^2)$ and `errexpr2` = $O(h^3)$). When the adaptation method is used, these numbers are filled in automatically based on the **Residual order** and **Error estimate** settings (on the adaptation study). The shape functions can also influence this order. Note that these order numbers need to be positive to generate additional elements (element growth).
- **Fraction of worst error** to refine elements whose local error indicator is larger than a given fraction of the largest local error indicator. Use the accompanying **Element fraction** field to specify the fraction. The default value is 0.5, which means that the fraction contains the elements with more than 50% of the largest local error.
- **Fraction of elements** to refine a given fraction of the elements. Use the accompanying **Element fraction** field to specify the fraction. The default value is 0.5, which means that the solver refines about 50% of the elements with the largest local error indicator.

Absolute Size

If you select **Absolute size**, the following setting appears:

In the **Size expression** field, type an expression for the element size (in terms of variables defined by the solution).

	The **Size expression** field uses the unit system defined by the component. The evaluated value of the expression is interpreted as a length in the geometry's unit system.

	Size expressions that can be evaluated on boundaries only cannot be used for geometries with domains, even if they are applied only on the boundary.

Evaluation Using an Initial Expression

With this option, you can use a size expression that contains variable values in physics, material data, and settings made in the study (such as a frequency), with the same evaluation as you get when running **Get Initial Value for Step** on a study step. A typical application could be to adapt the mesh size to a (nonconstant) wavelength.

From the **Mesh** list, select a mesh (on the same geometry as the **Size Expression** node) on which the interpolation should be done. If **Automatic** (the default) is chosen, a mesh will be created automatically.

From the **Study step** list, choose a study step (for which **Get Initial Value for Step** will be run). If you choose **None** (the default), an empty study is created. The mesh that was specified above is used in the referenced or empty study step that you choose. These actions take place in a copy of the model and are therefore not visible in the **Model Builder** tree.

Use the **Size expression** field to enter an expression for the absolute element size as a function of x, y, and z (depending on the space dimension). You can also use variables and materials from the physics, parameters, and global functions and materials in the expression. The actual size used in a coordinate is the minimum of the specified size expression and the result of the other size parameters (such as the maximum element size and the curvature factor), but this minimum is cut off by the specified minimum element size on a given entity, which acts as a lower bound. If the expression evaluates to something smaller than the minimum element size, you get a warning that the value was cut off.

	The **Size expression** field uses the unit system defined by the component. The evaluated value of the expression is interpreted as a length in the geometry's unit system.

	Size expressions that can be evaluated on boundaries only cannot be used for geometries with domains, even if they are applied only on the boundary.

The following settings are available under **External changes**:

There is a caching scheme that caches various data required to compute the mesh size field. If you have changed something in the model, which has not been picked up by the code and thus invalidated the cache, you can clear the cache by clicking **Reevaluate with Updated Model**.

The selection in the **Update when parameter is changed** list provides the possibility to have the cache cleared whenever the values of the selected parameter are changed.

SMOOTHING

In this section, you can control the amount of smoothing of the mesh size expression. The **Maximum size field growth rate** (default: 1.4) controls how fast the size field can grow. It is a factor that must be larger than 1.0. Use a higher value to make the mesh coarser closer to areas with a small mesh size, which results in fewer mesh elements.

	Meshing Operations and Attributes

Swept

The **Swept** node ( ) creates a swept mesh on a domain in 3D by sweeping the mesh from the source face along the domain to an opposite destination face. The source and destination can consist of several connected faces.

You can control the number, size, and distribution of elements using the **Size** and **Distribution** subnodes. The **Swept** node only reads properties from Size nodes defined on the entire geometry or on the domain level and Distribution nodes defined on the domain level.

In domain selection mode, this button works in the same way as the **Free Tetrahedral** button. In boundary selection mode, the software creates a swept mesh on the remaining domains using the selected boundaries as source faces.

To create a swept mesh:

- In the **Mesh** ribbon toolbar (Windows) or from the **Mesh** contextual toolbar (macOS and Linux), click the **Swept** ( ) button.
- Right-click a 3D **Mesh** node and select **Swept**.

	• About Swept Meshes • Structured Meshes

DOMAIN SELECTION

Specify the domains where you want a swept mesh. Choose the level of the geometry from the **Geometric entity level** list:

- Choose **Remaining** to specify swept mesh for remaining, unmeshed domains.
- Choose **Entire geometry** to specify swept mesh for the entire geometry.
- Choose **Domain** to specify the domains for which you want a swept mesh. Choose **Manual** in the **Selection** list to select the domains in the **Graphics** window or choose **All domains** to select all domains.

SOURCE FACES

Click the **Active** button to toggle between turning ON and OFF selections.

To specify the source faces directly, activate the **Source Faces** list and select the faces defining the source of the sweep operation in the **Graphics** window.

Click the **Swap Source and Destination** button ( ) to swap the faces in the source list above and the faces in the destination list in the **Destination Faces** section below.

DESTINATION FACES

To specify the destination faces directly, activate the **Destination Faces** list and select the faces defining the destination of the sweep operation in the **Graphics** window.

SWEEP METHOD

Face Meshing Method

In the **Face meshing method** list, you can specify how the unmeshed source faces, which are meshed automatically by the Swept node, are meshed:

- Select **Quadrilateral (generate hexahedra)** to generate a surface mesh with quadrilateral elements. This is the default meshing method.
- Select **Triangular (generate prisms)** to generate a surface mesh with triangular elements.

- Select **Quadrilateral (legacy version 5.2)** to generate a surface mesh with quadrilateral elements using the algorithm used in version 5.2 and earlier versions of COMSOL Multiphysics.
- Select **Quadrilateral (legacy version 5.2a)** to generate a surface mesh with quadrilateral elements using the algorithm used in version 5.2a of COMSOL Multiphysics.
- Select **Quadrilateral (legacy version 5.4)** to generate a surface mesh with quadrilateral elements using the algorithm used in version 5.4 of COMSOL Multiphysics.

Sweeping Path

Use the **Swept path calculation** list if you want to specify the shape of the sweep path:

- The default, **Automatic**, means that the sweeping algorithm automatically tries to determine if the sweep path is straight or circular; otherwise, a general approach is used.
- **Sweep following straight lines** means that all interior mesh points are located on straight lines between the corresponding source and destination points.
- **Sweep following circular arcs** means that all interior mesh points are located on circular arcs between the corresponding source and destination points.
- **Sweep using interpolation** means that the positions of the interior mesh points are determined by a general interpolation procedure.

Destination Mesh

Use the **Destination mesh generation** list if you want to specify the method to be used for transferring the source mesh to the destination:

- The default, **Determine suitable method**, means that the algorithm automatically tries to determine a suitable method for creating the destination mesh.
- **Use a rigid transformation** means that the destination mesh is created by a rigid transformation of the source mesh.
- **Morph source onto destination** means that the destination mesh is created from the source mesh by a morphing technique.
- **Project source mesh onto destination** means that the destination mesh is created from the source mesh by a projection technique.

CONTROL ENTITIES

Select the **Smooth across removed control entities** check box to smooth the transition in element size across removed control entities. You can specify the number of smoothing iterations in the **Number of iterations** field. In the **Maximum element depth to process** field you can specify the maximum element depth, from the boundary layer interface, for the mesh points to be smoothed.

LINKING FACES

You can choose between two different interpolation methods for the linking faces in the **Interpolation method for linking faces** list. This specifies how the mapped mesher, which is used by the swept mesher for the linking faces, determines the positions of the interior mesh points. For more information on the different option see Mapped.

	• *Laser Heating of a Silicon Wafer*: Application Library path **COMSOL_Multiphysics/Heat_Transfer/laser_heating_wafer** • *Deformation of a Feeder Clamp*: Application Library path **COMSOL_Multiphysics/Structural_Mechanics/feeder_clamp** • *Joule Heating of a Microactuator*: Application Library path **COMSOL_Multiphysics/Multiphysics/thermal_actuator_jh**

Two-Point Map

Use a **Two-Point Map** node ( ) to specify the orientation of the source mesh on the destination for a Copy Face or a Copy Domain node.

To add a Two-Point Map node as a subnode to a **Copy Face** or a **Copy Domain** node, right-click the node and select **Two-Point Map** from its context menu. Then enter the properties using the following sections:

SOURCE POINTS

Click the **Active** button to toggle between turning ON and OFF selections.

- Activate the **First point on source** list and select the point that you want to define as first source point in the **Graphics** window.
- Activate the **Second point on source** list and select the point that you want to define as second source point in the **Graphics** window.

DESTINATION POINTS

Activate the **First point on destination** list and select the point that you want to define as first destination point in the **Graphics** window.

Activate the **Second point on destination** list and select the point that you want to define as second destination point in the **Graphics** window.

Importing and Exporting Meshes

About Mesh Export, Import, and Operations on Imported Meshes

It can be useful to import meshes already created by external software or, alternatively, to export a mesh generated by COMSOL Multiphysics into other software. Importing an externally generated mesh can be helpful when a mesh is already saved in a file and recreating the geometry would be difficult and time consuming.

The partitioning of the mesh into domains, boundaries, edges, and points (vertices) is essential to set up the physics of each Component node. The available operations for imported meshes deliver some basic, but flexible, functionality. It is also possible to export a mesh for use in another software or for external modifications of the mesh data.

Exporting Meshes

You can export a mesh to a COMSOL Multiphysics file (`.mphbin` for a binary file format or `.mphtxt` for a text file format), to a NASTRAN® file (`.nas`, `.bdf`, `.nastran`, or `.dat`), or to a sectionwise text format.

	A 3D mesh can also be exported to an STL binary or text file, a PLY binary or text file, or a 3MF file.

To open the **Export** window for exporting meshes, from the **Mesh** toolbar, click **Export** ( ), or right-click the **Mesh** node and select **Export** ( ) from the menu.

EXPORT

Select a file type among the available formats in the **File type** list and enter a filename including the path in the **Filename** field (or click **Browse** to specify the filename).

Click **Export** to export a mesh to the specified file. A confirmation message appears in the **Messages** window.

EXPORTING TO A COMSOL MULTIPHYSICS FILE

If you export a mesh to a COMSOL Multiphysics binary (*.mphbin) or text (*.mphtxt) file, you specify the type of elements to export using the **Domain elements**, **Boundary elements**, **Edge elements** (available in 3D), and **Vertex elements** (available in 2D and 3D) check boxes under **Data to export**. By selecting the **Geometric entity information** check box, the export operation also writes information on the corresponding geometric entity index for each element to the file. Select the **Selections** check box to also include selections that are defined on the current geometry in the mesh export. Such selections can then be included when importing a mesh. Select the **Export as second-order elements** check box (2D and 3D only) to export the mesh including second-order elements. If you export a generated mesh that contains linear elements, the mesh to export is extended into a quadratic mesh with second-order elements.

EXPORTING TO A NASTRAN FILE

If you export a 2D or 3D mesh to a NASTRAN file, you specify the type of elements to export using the **Domain elements** and **Boundary elements** (available in 3D) check boxes. By selecting the **Geometric entity information** check box, the export operation also writes information on each element's corresponding geometric entity index to the corresponding property identification field of the resulting NASTRAN file.

Under **Output settings**, use the **Field format** list to specify if the output NASTRAN file should be stored in the small field format (single precision), large field format (double precision), or free field format (comma separated). Select the **Export as linear elements** check box to export the linear element information only. By default, second-order

elements (serendipity elements) are exported if second-order elements are available. Second-order elements are available for meshes generated in COMSOL Multiphysics and for imported meshes already containing second-order elements.

EXPORTING TO A SECTIONWISE FILE

You can export a 2D or 3D mesh to a sectionwise text file (*,txt). The sectionwise file contains a simplex partitioning of nonsimplex elements. Second-order information is ignored. The exported files include the following header: `% Model: Untitled.mph`

```
% Version: COMSOL 5.5.0.167
% Date: September 23 2019, 09:09
% Dimension: 3
% Nodes: 1375
% Elements: 6270
% Expressions: 0
% Description:
% Length unit: m
```

The number of expressions is be 0, which means that the description becomes empty. After the header, the coordinate values for the mesh follow under `% Coordinates`.

When you select **Sectionwise file (*.txt)** from the **File type** list, you can then select **Domain** (the default), **Boundary**, and **Edge** (3D only) from the a **Geometry level** list to determine the level of the exported mesh data.

When you export mesh to a sectionwise file from a **Mesh** node under a Component or from a **Mesh Part** node where the **Use units** check box is selected, the resulting file's length unit will be determined from the length unit of the **Geometry** node in the Component or the **Mesh Part** node, respectively.

EXPORTING A 3D MESH TO AN STL FILE

You can export a 3D mesh containing face elements to an STL file (stereolithography file) in the binary or text format. Because the STL format only supports triangles, the export operation writes two triangles (defining a quad split) to the STL file for each quad element in the mesh. Second-order elements are converted to first-order elements.

EXPORTING A 3D MESH TO A PLY FILE

You can export a 3D mesh containing face elements to a PLY file (Polygon File Format or Stanford Triangle Format file) in the binary or text format. Second-order elements are converted to first-order elements.

EXPORTING A 3D MESH TO A 3MF FILE

You can export a 3D mesh containing face elements to a 3MF file (3D Manufacturing Format file). From the **Data to export** list, select **Entire boundary as a single 3MF surface object** (the default) to export the entire surface mesh as one 3MF object of Surface type, or select **Domains as separate 3MF model objects** to export the surface mesh of each domain as a separate 3MF object of Model type and the remaining surface mesh, corresponding to the faces that are not adjacent to any domain, as a 3MF object of Surface type. Because the 3MF format only supports triangles,

the export operation writes two triangles (defining a quad split) to the 3MF file for each quad element in the mesh. Second-order elements are converted to first-order elements.

There is also a mesh export option available under **Results>Export** (see Mesh (Export)). Use that mesh export if you have computed a solution and want to export the mesh from a deformed configuration or a (geometric) parameter configuration, for example. From the **Mesh** node under **Results>Export** you can also export the second-order element nodes used by the COMSOL Multiphysics solvers, which are not available in the mesh itself. When exporting the mesh under **Results>Export**, the COMSOL Multiphysics and STL (3D only) binary and text formats are available.

Importing Meshes

You can import a mesh from a COMSOL Multiphysics native file or from another meshing sequence. In 3D you can also import meshes from NASTRAN, STL, VRML, sectionwise, PLY, and 3MF files. In 2D you can also import 2D meshes from NASTRAN (the third coordinate must then be the same for all mesh points) and from sectionwise files. See also Import for details about the options in the **Import** node.

Importing a mesh to a component where the **Geometry** node defines a geometry clears the geometry. In order to use an imported mesh together with an existing geometry, import it in a mesh part. Then use a Copy node under the **Mesh** node of the geometry's component to transfer the imported mesh and associate it with the geometry.

When a mesh is imported into COMSOL Multiphysics, the **Import** node automatically determines a partitioning of the mesh into domains, boundaries, edges, and points. If the automatically performed partitioning does not match the requirements, you can modify the face partitioning by manually adjusting the corresponding parameters. To hide the geometry based on an imported mesh in a view, use an Hide for Mesh Import node.

To import additional meshes, add another **Import** node. Then COMSOL Multiphysics adds the elements and points of the newly imported mesh to the existing mesh.

Meshes from different **Import** nodes form an assembly.

IMPORTED MESHES AND ELEMENT ORDERS

After importing mesh data on the COMSOL Multiphysics native format or NASTRAN format, you can change the element order for the shape functions used for the COMSOL Multiphysics simulation regardless of whether the imported data contained first- or second-order element node information. You change the element order used in the **Settings** window of a physics interface (for example, Heat Transfer in Solids, Solid Mechanics, or Laminar Flow) in the **Discretization** section. The second-order element node information is primarily used for representing curved boundaries. However, second-order information on the boundary will not be adjusted to the curvature of the boundary unless the original imported data contains second-order element node information that represent such curvature. This means, for example, that a triangular element on a curved boundary cannot in general have its element nodes all lying in the same plane. If you import a mesh containing second-order element node information and then lower the order in the **Discretization** setting to linear, then the curvature of the boundary is no longer respected. If you import a mesh containing second-order element node information and increase the element order

in the **Discretization** settings to cubic or higher, the higher-order nodes are inserted on the boundary based on interpolation using the second-order element data.

If the imported mesh contains second-order elements, the **Statistics** window includes the following information: **Imported mesh with second-order elements**.

A 1D mesh with second-order elements is linearized when imported.

IMPORTING MESHES FROM FILES WITH LENGTH UNIT

When you import mesh from a file that defines a length unit, the import operation scales the imported mesh to match the length unit of the Component with the **Mesh** node containing the corresponding **Import** node. For an **Import** node under a **Mesh Part** node, the import operation scales the mesh if the **Use units** check box is selected.

USING SEVERAL MESHING SEQUENCES OF IMPORTED MESH TYPE

You can define several meshing sequences for the same geometry (see Adding, Editing, and Building Meshing Sequences). If the geometry sequence is empty (a necessary condition for the **Imported mesh** sequence type), the first **Mesh** node under the **Meshes** node defines a topology and is referred to as the *master sequence*. All of the other **Mesh** nodes should define a geometry topologically similar to the one defined by the master sequence. Two geometries are considered to be similar if they have the same number of geometric entities and their points have the same coordinates.

When you build a non-master sequence, COMSOL Multiphysics first builds the master sequence. If the build of the master sequence fails or if the geometries defined by these two sequences are not similar, an error occurs.

If you want to use the geometric multigrid solver, several meshing sequences must be added first.

Import and Multigrid

REMESHING IMPORTED MESHES

It is possible to remesh an imported mesh to create a new mesh more suited to solving the problem at hand. See Creating Geometry from Mesh for more information.

MODIFYING IMPORTED MESHES

For 3D and 2D imported mesh sequences, the Refine, Adapt, and Convert operations are available for modifying imported meshes. For 1D imported mesh sequences, the Refine and Adapt operations are available. See Refine, Adapt, and Convert for more information.

IMPORTING EXTERNALLY GENERATED MESH DATA

It is possible to import externally generated mesh data using a COMSOL mesh file. The file format contains a section with mesh points coordinates, followed by sections with mesh element information, divided into separate subsections for each mesh element type (see Mesh in the chapter *The COMSOL File Formats* in the *COMSOL Multiphysics Programming Reference Manual*).

Importing Incomplete Mesh Data

A COMSOL Multiphysics mesh contains elements for all space dimension levels. For example, a tetrahedral mesh consists of domain (tetrahedra), boundary (triangles), edge, and vertex elements. Furthermore, each element has an index to the geometric entity it belongs to. If a mesh file is incomplete — for example, if it only contains

tetrahedra — the Import operation automatically generates the missing element data. To illustrate this behavior, import the file `mesh_example_1.mphtxt` from

```
applications/COMSOL_Multiphysics/Meshing_Tutorials/
```

This file contains domain elements only with geometric entity information dividing the mesh into two domains. Now, export the imported mesh to a file using the default settings. Then, compare the resulting file (see `mesh_example_4.mphtxt`) with the file `mesh_example_1.mphtxt` and note that the exported file contains complete mesh information; that is, it contains domain elements, boundary elements, edge elements, vertex elements, and geometric entity information.

Transferring Domain Information

If you have an externally generated mesh with a predefined partitioning of the elements, you can transfer this partitioning to COMSOL Multiphysics by specifying geometric entity information in the `.mphtxt` file. To illustrate this, import the file `mesh_example_2.mphtxt`. This file contains domain elements only, without any geometric entity information. The imported mesh consists of one domain only. Note that the imported mesh from the file `mesh_example_1.mphtxt` consists of two domains according to the given geometric entity information.

Transferring Boundary Information

To transfer boundary partitioning information of an externally generated mesh you need to include boundary elements with the corresponding geometric entity information in the `.mphtxt` file. To illustrate this, import the file `mesh_example_3.mphtxt` with the **Boundary partitioning** option set to **Minimal**. This file contains domain and boundary elements with geometric entity information defining 5 boundaries. Note that the imported mesh also has 5 boundaries. Now import the file `mesh_example_1.mphtxt`, which has no boundary information, using the same import settings. Note that the imported mesh now has 3 boundaries only because the Minimal option generates the minimal possible partitioning that is required by the topological criteria.

Nonconforming Meshes

If you import mesh data defining a nonconforming mesh (for a definition, see Conforming Meshes) the import operation will typically create edge or face elements of the mesh edges or mesh faces corresponding to each nonconformity in the mesh because these mesh edges or mesh faces are typically only adjacent to one 2D or 3D element each. To illustrate this, import the 2D mesh file `mesh_nonconforming.mphtxt` (available in the COMSOL Multiphysics installation under `applications/COMSOL_Multiphysics/Meshing_Tutorials/`) using default settings. This file contains 8 mesh vertices and 3 quad elements only, defining a mesh with a so-called hanging node. Note that the imported mesh gets 2 domains, 8 edges, and 6 vertices.

ABOUT THE SECTIONWISE FILE FORMAT

A sectionwise file is a text file with the extension .txt that stores information defining an unstructured mesh of simplex elements in any dimension. A sectionwise file starts with an optional header followed by the sections:

- Coordinates. Starts with the line `% Coordinates` followed by one line for each vertex (1 to 3 columns, depending on the space dimension for x, y, and z).
- Elements. Starts with the line `% Elements` followed by one line for each (simplex) element. The number of columns (1, 2, 3, or 4) determines the element type (vertex, edge, triangle, or tetrahedron). Each row contains the row indices (1-based) of the points in the Coordinates section defining the corresponding element.
- Data. An optional section starting with `% Data` followed by one line of data values for each vertex.

Creating Geometry from Mesh

A mesh imported into COMSOL Multiphysics can be used to construct a geometry. A situation in which this is useful is when you need to add more geometry (for example, a bounding box to mesh the surrounding of the imported mesh object), or if you want to modify the imported mesh (for example, by adding boundary layers).

1 Select the mesh part or meshing sequence with the imported mesh.

2 In the **Mesh** toolbar, click **Create Geometry from Mesh** ( ) or right-click and select it from the context menu.

The COMSOL Multiphysics software creates a new model Component of the same dimension as the current mesh. The geometry sequence in the new component has an Import node that imports the original mesh as geometry.

REUSING THE ORIGINAL MESH

It is possible to use the original, imported mesh, or parts of it, in the new Component.

1 Add a Copy feature to the meshing sequence.

2 Select the original import sequence as Source Mesh.

3 Select source and destination entities.

4 Click the **Copy** button to copy the mesh. If you have added more geometry, you can use the usual mesh operations to add mesh to these entities. You can also add boundary layers to the copied mesh.

Creating or Modifying Entities of Imported Meshes

The following mesh import operation nodes make it possible to define the partitioning of an imported mesh into domains, boundaries, edges, and points, with respect to the physics interface settings of the Component; to create domains, faces, edges, and vertices for an imported mesh; and to delete geometric entities from an imported mesh.

TABLE 8-4: OPERATIONS FOR CREATING AND MODIFYING ENTITIES OF AN IMPORTED MESH

ICON	NAME AND LINK	USE AND DESCRIPTION
	Ball	To split geometric entities in an imported mesh by an element set defined by a ball.
	Box	To split geometric entities in an imported mesh by an element set defined by a box.
	Create Domains	To create additional domains in an imported mesh.
	Create Edges	To create edges in a component without geometry.
	Create Faces	To create additional faces on an imported mesh.
	Create Vertices	To create vertices in a component without geometry.
	Cylinder	To split geometric entities in an imported mesh by an element set defined by a cylinder.
	Delete Entities	To delete geometric entities from an imported mesh.
	Detect Faces	To split the geometric boundary entities in an imported mesh by detecting shapes that constitute faces.
	Fill Holes	To repair an imported 3D surface mesh with minor holes.
	Join Entities	To join adjacent geometric entities in an imported mesh.
	Logical Expression	To split geometric entities in an imported mesh by specifying a logical expression.

Creating or Modifying Elements of Imported Meshes

The following mesh import operation nodes make it possible to create or modify elements of an imported mesh.

TABLE 8-5: OPERATIONS FOR CREATING AND MODIFYING ELEMENTS OF AN IMPORTED MESH

ICON	NAME AND LINK	USE AND DESCRIPTION
	Adapt	To use adaptive mesh generation based on an error estimate from a computed solution (2D and 3D).
	Convert	To convert quadrilateral elements to triangles in 2D and hexahedra, prisms, and pyramids to tetrahedra in 3D.
	Free Tetrahedral	To create an unstructured tetrahedral mesh (3D only).
	Refine	To refine a mesh by splitting elements (2D and 3D).

Using Operations on an Imported Mesh

The following example shows how you can use the mesh import operations to control the partitioning of an imported mesh.

IMPORTED MESH

The following overview is based on using an imported mesh from the **feeder_clamp** model, found in the COMSOL Multiphysics Applications Libraries and shown in Figure 8-6.

	Deformation of a Feeder Clamp: Application Library path **COMSOL_Multiphysics/Structural_Mechanics/feeder_clamp**

Figure 8-6: The Deformation of a Feeder clamp model showing an imported mesh, which is divided into 5 domains, 69 faces, 174 edges, and 114 points.

JOIN ENTITIES

To form a single domain, use a **Join Entities** ( ) node, which operates on the domain level (that is, add **All domains** to the selection). As a result, you can obtain a mesh for the model with a single domain.

DELETE ENTITIES

To remove all edges, use a **Delete Entities** ( ) node, which operates on the edge level (that is, add **All edges** to the selection). As a result, you can obtain a mesh for the model with no edges or points.

CYLINDER

To define a boundary that defines the contact between the feeder and the clamp, use a **Cylinder** ( ) node that operates on the boundary level (that is, add **All boundaries** to the selection, and use `10.001` as a cylinder radius, `0` and `-20` for top and bottom, `(15, 0, 35)` as position, and **y-axis** as the axis type).

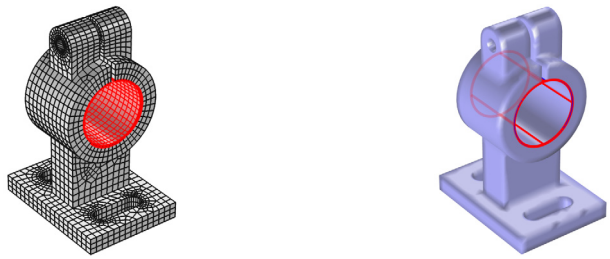

Figure 8-7: Using a Cylinder node to define the contact between the feeder and the clamp.

LOGICAL EXPRESSIONS

To define two boundaries that define screw channels, use a **Logical Expression** ( ) node, which operates on the boundary level (that is, add **All boundaries** to the selection and use `(y+10)^2+(z-55)^2<=4` as the expression).

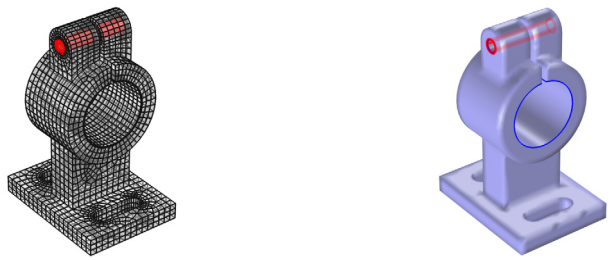

Figure 8-8: Using a Logical Expression to create boundaries on the two screw channels of the feeder clamp.

BALL

To create a boundary defining one of the washers used for the boundary loads of the model, use a **Ball** ( ) node, which operates on the boundary level (use `(5,-10, 55)` as a ball center and 3.5 as a ball radius). The input boundary selection must be limited; otherwise, the ball operation also splits one of the cylinder boundaries, which was created by the **Logical Expression** node.

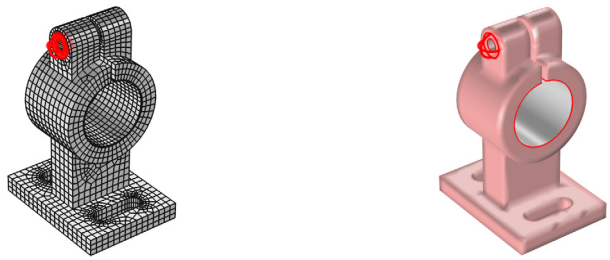

Figure 8-9: Using a Ball node to define one of the washers of the feeder clamp.

By creating a duplicate of the **Ball** node and modifying the ball center (set `x` to `5`) you can create a boundary for the second washer.

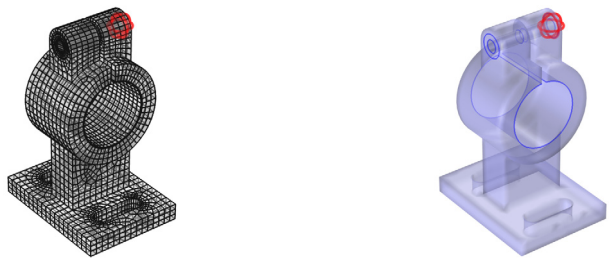

Figure 8-10: Using a Ball node to define a second washer.

BOX

To create the boundaries for the mounting holes, use a **Box** ( ) node, which operates on the boundary level (use `(0 - 30, -30 - 10, 0.1 - 4.9)` as box limits and use the **Some vertex** condition).

Figure 8-11: Using a Box node to define the mounting holes on the feeder clamp.

CREATE VERTICES

Using the **Create Vertices** ( ) node, it is possible to add mesh vertices to a component with an empty geometry

CREATE EDGES

Using the **Create Edges** ( ) node, it is possible to add mesh vertices to a component with an empty geometry.

CREATE FACES

Using the **Create Faces** ( ) node, it is possible to add faces on the surface of an imported 3D mesh.

CREATE DOMAINS

Using the **Create Domains** ( ) node, it is possible to add domains in an imported 3D mesh.

FILL HOLES

Using the **Fill Holes** ( ) node, you can repair holes in an imported 3D surface mesh.

Ball

Use a **Ball** node ( ) to split geometric entities of an imported mesh by creating at least one new geometric entity for the elements enclosed in the specified ball.

To add a Ball node, right-click a 2D or 3D **Mesh** node and select **Ball** from the **Partition Entities** menu. Then use the following sections to specify the geometric entities to split, the properties of the ball, and the split condition:

GEOMETRIC ENTITY SELECTION

Define the geometric entities that you want to split. You choose the geometric entity level from the **Geometric entity level** list:

- Choose **Entire geometry** to split all geometric entities according to the specified ball.
- Choose **Domain**, **Boundary**, or **Edge** to specify the domains, boundaries, or edges, respectively, that you want to split. Use **All domains**, **All boundaries**, or **All edges** to select all entities of the specified dimension.

BALL CENTER

Specify the center of the ball in the **x**, **y**, and **z** (only in 3D) fields (SI unit: m).

BALL RADIUS

Specify the radius of the ball in the **Radius** field (SI unit: m). The default radius is 1.

CONDITION

Use the **Include element if ball contains** list to select the condition for which the element is enclosed in the specified ball. Choose **All vertices** to consider an element to be enclosed in the specified ball if all element vertices are enclosed, or choose **Some vertex** to consider it enclosed if at least one element vertex is enclosed.

Box

Use a **Box** node ( ) to split geometric entities of an imported mesh by creating at least one new geometric entity for the elements enclosed in the specified box.

To add a Box node, right-click a 2D or 3D **Mesh** node and select **Box** from the **Partition Entities** menu. Then use the following sections to specify the geometric entities to split, the properties of the box, and the split condition:

GEOMETRIC ENTITY SELECTION

Define the geometric entities that you want to split. You choose the geometric entity level from the **Geometric entity level** list:

- Choose **Entire geometry** to split all geometric entities according to the specified box.
- Choose **Domain**, **Boundary**, or **Edge** to specify the domains, boundaries, or edges, respectively, that you want to split. Use **All domains**, **All boundaries**, or **All edges** to select all entities of the specified dimension.

BOX LIMITS

Specify the limits of the box in the **x minimum**, **x maximum**, **y minimum**, **y maximum**, **z minimum** (3D only), and **z maximum** (3D only) fields.

CONDITION

Use the **Include element if box contains** list to select the condition for which an element is enclosed in the specified box. Choose **All vertices** to consider an element to be enclosed in the specified box if all element vertices are enclosed, or choose **Some vertex** to consider it enclosed if at least one element vertex is enclosed.

Create Domains

Use a **Create Domains** node ( ) to create one domain for each (connected) finite void region that is defined by an imported 3D mesh. Together with the Free Tetrahedral operation, the Create Domains operation makes it possible to mesh imported surface meshes directly (that is, without creating a geometry) as long as the imported surface

mesh is of good quality. **Create Domains** nodes are available from the **Create Entities** menu ( ) on the **Mesh** ribbon or by right-clicking the main **Mesh** node.

	A warning will appear for faces that do not become adjacent to any domain. For a **Mesh** node, an error will appear when you build the **Finalize** node if the mesh is incomplete; that is, if it contains unmeshed domains. This means that you must generate a mesh for the created domains before you can build the **Finalize** node. However, for a **Mesh Part** node you can build the **Finalize** node for a mesh that is incomplete.

Create Edges

Use a **Create Edges** node ( ) to create edges in a component without geometry.

To add a **Create Edges** node to a 2D component, right-click the **Mesh** node and select **Create Edges**. For a 3D mesh, it is available from the **Create Entities** menu ( ) on the **Mesh** ribbon or by-right clicking the **Mesh** node. You can add a **Create Edges** node when the geometry is empty but the mesh includes either an **Import** node or a **Create Vertices** node.

Enter the properties for the **Create Edges** node using the following sections:

STARTING VERTICES, END VERTICES

To create edges, select vertices in the **Starting Vertices** and **End Vertices** sections. Edges will be created from vertices in the selection in **Starting Vertices** to vertices in the selection in **End Vertices**. From each vertex in the selection in **Starting Vertices**, edges will be created to the closest vertices in the selection in **End Vertices**.

ELEMENT SIZE

To specify the size distribution of the edge mesh, select one of the methods from the **Size distribution type** list:

- Select **Element size** (the default) to specify the maximum element size (SI unit: m), which you enter in the **Maximum element size** field. The value is a relative number (default: 0.1 in 3D and 1/15 in 2D). This value is multiplied with the size of the bounding box.
- Select **Fixed number of elements** to use a fixed number of mesh elements, which you enter into the **Number of elements field** (default: 1).
- Select **Explicit distribution** to use an explicit, user-defined element distribution. To define the distribution of mesh elements, enter a vector-valued expression defining a strictly increasing sequence of nonnegative numbers (using comma-separated numbers) in the **Relative placement of vertices along edge** field, specifying the relative arc length values of the mesh vertices along the edge or boundary. Select the **Reverse direction** check box to reverse the direction of the explicit distribution.
- Select **Predefined distribution** to specify properties of a predefined distribution method that can be a **Geometric sequence** (exponentially increasing or decreasing element size) or an **Arithmetic sequence** (constant difference in size between neighboring elements), which you choose from the **Growth formula** list. In addition, specify values in the **Number of elements** and **Element ratio** fields to determine the number and ratio of elements in the distribution. Select the **Symmetric distribution** check box to make the predefined size distribution symmetric. Select the **Reverse direction** check box to reverse the direction of the predefined distribution.

Create Faces

Use a **Create Faces** node ( ) to create faces on an imported 3D mesh. **Create Faces** nodes are available from the **Create Entities** menu ( ) on the **Mesh** ribbon or by right-clicking the main **Mesh** node.

	The created faces are formed using a simple surface mesh. You can add **Adapt** or **Refine** nodes to the meshing sequence to make a finer surface mesh.

Enter the properties for the **Create Faces** node using the following section:

EDGE SELECTION

To create faces you need to define an edge selection. If you select the **Group adjacent edges** check box (it is selected by default), then, when an edge is selected (or deselected), the selection automatically extends to neighboring edges that seem to be part of the loop. If you clear this check box, each edge can be selected (deselected) manually. To create faces, the selected edges must form simple loops; that is, there should be no ambiguity about how to draw the loops. You can select edges to form several loops in a single operation.

Create Vertices

Use a **Create Vertices** node ( ) to create vertices in a component without geometry.

To add a **Create Vertices** node, right-click a 2D **Mesh** node and select **Create Vertices**. For a 3D mesh, it is available from the **Create Entities** menu ( ) on the **Mesh** ribbon or by right-clicking a 3 D **Mesh** node. Enter the properties for the **Create Vertices** node using the following section:

CREATE VERTICES

Use the **x**, **y**, and **z** (3D only) fields to specify the positions of the vertices. Valid inputs are either arrays of the same length or scalars. If both arrays (of size bigger than one) and scalars are given, the scalars are interpreted as an array of constant value. Use the **Range** button ( ) if desired to create an array of coordinate values.

Use the **Relative snapping tolerance** field to specify the maximum distance a specified point will snap to. The specified point will snap to the closest mesh point within the **Relative snapping tolerance**, and a vertex element will be created at the snapped point. If there are no such mesh points both a mesh point and a vertex element will be created at the specified point. The value in the **Relative snapping tolerance** field is relative to the size of the mesh including the added vertices (it is relative to the diameter of the bounding box) and should therefore be given as a value between 0 and 1. The specified points are not allowed to be within the relative snapping tolerance of each other.

Cylinder

Use a **Cylinder** node ( ) to split geometric entities of an imported mesh by creating at least one new geometric entity for the elements enclosed in the specified cylinder.

To add a Cylinder node, right-click a 3D **Mesh** node and select **Cylinder** from the **Partition Entities** menu. Then use the following sections to specify the geometric entities to split, the properties of the cylinder, and the split condition:

GEOMETRIC ENTITY SELECTION

Define the geometric entities that you want to split. You choose the geometric entity level from the **Geometric entity level** list:

- Choose **Entire geometry** to split all geometric entities according to the specified cylinder.
- Choose **Domain**, **Boundary**, or **Edge** to specify the domains, boundaries, or edges, respectively, that you want to split. Use **All domains**, **All boundaries**, or **All edges** to select all entities of the specified dimension.

SIZE AND SHAPE

Specify the radius of the cylinder in the field **r** and the positions of the upper and lower boundary circles in the **Top distance** and **Bottom distance** fields, respectively.

POSITION

Specify the position of cylinder in the **x**, **y**, and **z** fields.

AXIS

Use **Axis type** to set the direction of the cylinder axis. Choose **x-axis**, **y-axis**, or **z-axis** to let the cylinder axis coincide with one of the coordinate axes. It is also possible to customize the cylinder axis by choosing **Cartesian** or **Spherical** and using **x**, **y**, and **z**, or **theta** and **phi**, respectively.

CONDITION

Use the **Include element if cylinder contains** list to select the condition for an element to be enclosed in the specified cylinder. Choose **All vertices** to consider an element to be enclosed in the specified cylinder if all element vertices are enclosed, or choose **Some vertex** to consider it enclosed if at least one element vertex is enclosed.

Delete Entities

Use a **Delete Entities** node ( ) to delete geometric entities from an imported mesh.

To add a Delete Entities node, right-click a 2D or 3D mesh node and select **Delete Entities**. Then use the following sections to specify the geometric entities to delete:

GEOMETRIC ENTITY SELECTION

Define the geometric entities that you want to delete. You choose the geometric entity level from the **Geometric entity level** list: Choose **Domain**, **Boundary**, **Edge**, or **Point** to specify the domains, boundaries, edges, or vertices, respectively, that you want to delete. Use **All domains**, **All boundaries**, **All edges**, or **All points** to select all entities of the specified dimension.

ADJACENT ENTITIES

Select the **Delete adjacent lower dimensional entities** check box to also delete the adjacent entities of lower space dimensions.

Detect Faces

Use a **Detect Faces** node ( ) to split geometric boundary entities of an imported mesh by searching for shapes in the mesh that are likely to constitute faces.

To add a **Detect Faces** node, right-click a 3D **Mesh** node and select **Detect Faces** from the **Partition Entities** submenu. Then use the following sections to specify the geometric boundary entities to split and the parameters of the partitioning algorithm:

BOUNDARY SELECTION

Select the geometric boundary entities that you want to split. Use **All boundaries** to select all boundary entities.

FACE PARTITIONING

The partitioning algorithm splits the boundary elements along edges where the angle between neighboring boundary elements is large. Use the **Maximum neighbor angle** field to set the largest tolerated neighbor angle.

Select the **Detect planar faces** check box (selected by default) to also group approximately planar boundary elements into faces. Use the **Minimum relative area** field to limit how small these faces can be relative to all of the selected boundary entities. The maximum accepted angle between boundary elements in a planar face can be set with the **Maximum deviation angle** field. If the **Detect adjacent fillet faces** check box is selected, the algorithm also searches for adjacent groups of boundary elements that form cylindrical faces.

Fill Holes

Use a **Fill Holes** node ( ) to repair an imported 3D surface mesh that might have minor holes. **Fill Holes** nodes are available from the **Create Entities** menu ( ) on the **Mesh** ribbon or by right-clicking the main **Mesh** node. Enter the properties for the **Fill Holes** node using the following sections:

BOUNDARY SELECTION

The operation to fill a hole requires a face (boundaries) selection and finds holes in and between all selected faces.

FILL HOLES

Holes that have a perimeter less than the tolerance are filled. You specify the tolerance using the **Fill holes tolerance** list:

- Select **Automatic** (the default), a tolerance that is 10 times the mean element size of the imported mesh is used.
- Select **Manual** to specify the tolerance (SI unit: m) in the **Maximum hole perimeter** field.

The **Join with selected boundaries** check box is selected by default. If selected, the created mesh elements (triangles) that fill the hole are added to the surrounding face. If you clear this check box, or if the hole is adjacent to more than one face, the created mesh elements form a new face.

Finalize

The **Finalize** node ( ) ends a meshing sequence of imported type. It performs an associativity update for geometric entity numbers. You cannot delete, disable, or move the **Finalize** node. The software automatically builds all nodes in a meshing sequence, including the **Finalize** node, if you select a node in Model Builder outside the meshing sequence.

Import

Use an **Import** node ( ) to import a mesh from a file or from another meshing sequence or mesh part. It is only possible to import a mesh to a meshing sequence under a **Mesh** node if the geometry sequence is empty. If the sequence already contains a mesh, the imported mesh is added to the existing mesh, forming an assembly. If you use this **Import** node in a mesh part, you can then use it in a geometry sequence through an **Import** node under a **Geometry** node.

To import a mesh, right-click a **Mesh** node or a **Mesh Part** node and select **Import**. Then enter the properties for the import using the following section:

IMPORT

In the **Source** list, choose the type of data to import: **Any importable file**, **Meshing sequence** (if applicable meshing sequences are available), and **COMSOL Multiphysics file** are always available. In addition, you can choose **STL file** (stereolitography file), **VRML file** (Virtual Reality Modeling Language file), **PLY file** (Polygon File Format or Stanford Triangle Format file), and **3MF file** (3D Manufacturing Format file), and **NASTRAN file** and **Sectionwise file** in 2D and 3D.

For file import, specify the filename in the **Filename** field or click the **Browse** button. For import from another mesh in the model, select the meshing sequence from the **Source** list below. To import a meshing sequence, click the **Import** button. For a mesh part, the **Import** button is not needed and is therefore disabled. If you have changed some property, the software automatically reimports the mesh when you click a build button.

For information on remeshing an imported mesh, see Creating Geometry from Mesh.

Properties for COMSOL Multiphysics Import

In 3D, you can import 3D meshes and planar 2D meshes from COMSOL Multiphysics files (`.mphtxt` or `.mphbin`). Planar 2D meshes, imported to a 3D component, always appear at $z = 0$.

When you import a mesh from a COMSOL Multiphysics file that contains mesh selections, you need to select the **Import selections** check box (selected by default) to import the selections together with the mesh. If you choose to import mesh selections, corresponding selections are created and appear in the **Domain Selections**, **Boundary Selections**, **Edge Selections**, or **Point Selections** sections, depending on space dimension and the entity level for the imported selections. You can use the imported selections, for example, to add as a selection to a dataset or plot during postprocessing. See also Domain Selections, Boundary Selections, Edge Selections, and Point Selections below.

To import the second-order elements in 2D and 3D as linear elements (that is, ignoring node points not in element vertices), select the **Import as linear elements** check box (not selected by default).

Properties for NASTRAN Import

You can import 3D meshes (and planar 2D meshes) in the NASTRAN bulk data format, the most common format for exchanging 3D meshes among programs. This format supports hundreds of NASTRAN entries describing elements, loads, and materials, making it possible to define a complete finite element model. When you import a NASTRAN bulk data file into COMSOL Multiphysics, the software imports mesh and material information only.

To import mesh and material data from a NASTRAN file, select **Mesh and materials** in the **Data to import** list. In this case, COMSOL Multiphysics creates **Material** nodes corresponding to the data in any MAT1 and MAT10 entries in the file. Furthermore, the thickness data of any PSHELL entry in the file is stored in a **Variables** node as long as it is greater than zero. To simplify the use of this data in physics interfaces, such as the **Shell** interface, an **Explicit** selection, which contains all boundary faces associated with PSHELL entries, also becomes available. If the material data is not required, select **Only mesh** to import the mesh only.

Mesh information is read from different NASTRAN entries, including those for mesh elements of lower dimension. When this information is not complete in the file, COMSOL Multiphysics enriches the imported mesh data with boundary elements, edge elements, and vertex elements such that a valid mesh object is formed. Each element in the imported mesh object receives a unique entity index.

For information on the NASTRAN entries that COMSOL Multiphysics supports, see `Import` in the *COMSOL Multiphysics Programming Reference Manual* (*Meshing*).

To use material data in the file to determine the partitioning of the elements, select the **Partition according to material data** check box (selected by default). The **Create selections** check box is selected by default to automatically generate selections corresponding to the groups of domain and boundary elements in the file. If you do this, corresponding selections are created and appear in the **Domain Selections** or **Boundary Selections** sections, depending on the entity level for the imported selections. These selections become available for specifying geometric entities throughout the component — for instance, in Material nodes and physics interfaces. The **Allow partitioning of shells** check box is selected by default to allow the boundary partitioning algorithm to split the boundary entities that are defined based on the data in the file into smaller parts.

The import of NASTRAN files supports first-order (linear) and second-order elements. To import the second-order elements in the NASTRAN file as linear elements (that is, ignoring node points not in element vertices), select the **Import as linear elements** check box (not selected by default).

Boundary Partitioning Properties

These settings are available with the following options from the **Source** list: **COMSOL Multiphysics file**, **STL file**, **VRML file**, **NASTRAN file**, **PLY file**, **Sectionwise file**, and **3MF file**.

If the partitioning of the boundary elements in the mesh to import into boundaries (faces) is not complete, you can use the **Boundary partitioning** list to control the partitioning:

- Select **Automatic** to let the software partition the boundary elements into boundaries automatically (the default setting).
- Select **Minimal** to make a minimal boundary partitioning. This is useful when you import a mesh from a measured geometry or a NASTRAN mesh with a predefined boundary partitioning. The automatic face partitioning is not desired then.
- Select **Manual** (in 2D) or **Detect boundaries** (in 3D) to manually control the partitioning. Both choices add a set of parameters, which make it possible to influence the result of the partitioning algorithm; for the Detect boundaries case in 3D, the **Detect Faces** and **Detect Edges** sections appear, containing settings for controlling the face and edge partitioning, respectively.

Repair Tolerance and Selection for STL (Stereolithography) Files

These settings are available when the **Source** list is set to **STL file** for import of stereolithography files in 3D. Such files contain data for an unstructured triangulated surface.

The **Create selections** check box is selected by default to create a boundary selection of every `solid` section in the file during import. Typically, there is only one such section. In that case, a selection of the entire boundary is created. This happens also when the STL file is binary and can by definition have no `solid` sections. The created selections appear in a table in the **Boundary Selections** section that appears below the **Import** section. The table has two columns. In the right column, the name of the `solid` section that the selection has been created from appears. If the section is unnamed or if the file is binary, the name is empty. The selections appear in the same order as the corresponding sections in the file. In the left column, the name of the selection appears. By this name, which can be changed, as well as dimension of the selection, you can find the selection in the model.

The repair tolerance assures that the imported mesh contains no holes and no triangles with sides shorter that the tolerance. From the **Repair tolerance** list, select one of these options:

- **Automatic** (the default), to use a default tolerance value (10^{-8}).
- **Relative**, to specify a **Relative tolerance** (default: 10^{-8}). The relative tolerance value must be smaller or equal to 1.
- **Absolute**, to specify an **Absolute tolerance** (default: 10^{-8}).

DETECT FACES (3D) AND 2D SETTINGS

The partitioning algorithm aims to split boundary elements (edge elements in 2D, face elements in 3D) into boundary entities in such a way that no large angles appear between neighboring elements within the same

boundary entity. In 2D, you can limit the angle between any two elements within the same boundary entity using the **Maximum angle within boundary** field. The maximum accepted neighbor angle can be set using the **Maximum neighbor angle** field (default: 40 degrees).

If the **Detect planar faces** check box (3D) or the **Detect straight edges** check box (2D) is selected (both are selected by default), the mesh import detects (approximately) planar faces or straight edges, respectively. The minimum size of a straight or planar boundary entity, relative to the entire boundary, can be set using the **Minimum relative length** field (2D) and **Minimum relative area** field (3D). The maximum accepted angle (in degrees) between elements for a boundary to be considered straight or planar can be set using the **Maximum deviation angle** field. If the **Detect adjacent fillet faces** check box (3D) is selected, the algorithm also searches for adjacent groups of boundary elements that form cylindrical faces.

DETECT EDGES (3D)

The partitioning algorithm aims to split edge elements into edge entities in such a way that no large angles appear between neighboring elements within the same edge entity. The maximum accepted neighbor angle can be set using the **Maximum edge neighbor angle** field (default: 60 degrees).

If the **Detect planar edges** check box is selected (it is selected by default), the mesh import detects (approximately) planar edges. The **Detection parameter** specifies to which extent the operation should search for planar edges. Use the slider to tune the detection level, where **Strict** means that only fully planar edges are searched for, and **Tolerant** means that the algorithm searches for planar edges with a wider tolerance. You can also enter the parameter value directly as a value between 0 (strict) and 1 (tolerant).

If the **Detect straight edges** check box is selected (it is selected by default), the mesh import detects (approximately) straight edges. The **Detection parameter** specifies to which extent the operation should search for straight edges. Use the slider to tune the detection level, where **Strict** means that only fully straight edges are searched for, and **Tolerant** means that the algorithm searches for straight edges with a wider tolerance. You can also enter the parameter value directly as a value between 0 (strict) and 1 (tolerant).

From the **Minimum edge length** list, choose one of the following options: **Automatic** (the default), **Relative**, or **Absolute** to specify the minimum required length of an edge to be detected. If you select **Relative**, specify a minimum relative length in the **Minimum relative length** field that appears, and if you select **Absolute**, specify a minimum absolute length in the **Minimum absolute length** field that appears.

DOMAIN SELECTIONS, BOUNDARY SELECTIONS, EDGE SELECTIONS, AND POINT SELECTIONS

In these sections, imported mesh selection appear. In the **Name** column, the name of each selection appears. For COMSOL Multiphysics file import, each name is by default the name of the selection in the imported file, which appears in the **Name in file** column. Select the name in the **Name** column to highlight the selection in the **Graphics** window. You can change the name of a selection by editing the corresponding table entry in the **Name** column. Note that not all of these selection sections are available for all space dimensions.

Join Entities

Use a **Join Entities** node ( ) to join adjacent geometric entities in an imported mesh.

To add a Join Entities node, right-click a 2D or 3D mesh node and select **Join Entities**. Then use the following sections to specify the geometric entities to join:

GEOMETRIC ENTITY SELECTION

Define the geometric entities that you want to join. You choose the geometric entity level from the **Geometric entity level** list: Choose **Domain**, **Boundary**, or **Edge** to specify the domains, boundaries, or edges, respectively, that you want to join. Use **All domains**, **All boundaries**, or **All edges** to select all entities of the specified dimension.

ADJACENT ENTITIES

Select the **Join adjacent lower dimensional entities** check box to also join the adjacent entities of lower dimensions (boundaries and edges for joined domains, for example).

Logical Expression

Use a **Logical Expression** node ( ) to split geometric entities of an imported mesh by creating at least one new geometric entity for the elements that fulfill the specified logical expression.

To add a Logical Expression node, right-click a 2D or 3D **Mesh** node (that has an imported mesh) and select **Logical Expression** from the **Partition Entities** menu. Then use the sections below to specify the geometric entities to split, the expression, and the split condition.

GEOMETRIC ENTITY SELECTION

Define the geometric entities that you want to split. You choose the geometric entity level from the **Geometric entity level** list:

- Choose **Entire geometry** to split all geometric entities according to the specified cylinder.
- Choose **Domain**, **Boundary**, or **Edge** to specify the domains, boundaries, or edges, respectively, that you want to split. Use **All domains**, **All boundaries**, or **All edges** to select all entities of the specified dimension.

EXPRESSION

Enter a logical expression using `x`, `y`, or `z` (3D only); the mesh size `h` and mesh quality `qual*` (see Mesh Element Quality and Size); Unary, Binary, and List Operators and Their Precedence Rules; and Mathematical and Numerical Constants. For instance, the expression `(x*x+y*y)<1` defines a ball split in 2D and an infinite cylinder split in 3D. You can also use the Boolean variables `istri`, `isquad`, `istet`, `ispyr`, `isprism`, or `ishex` in the expression in order to partition the mesh according to the respective element type (triangular, quadrilateral, tetrahedral, pyramid, prism, or hexahedral, respectively). For instance, the expression `istet` makes a separate domain for each connected set of tetrahedra, while the expression `ispyr || ishex` makes a separate domain for each connected set of elements containing pyramids or hexahedra.

	By default, the expression is set to 1, not inducing any split of geometric entities.

CONDITION

Use the **Include element if expression is fulfilled for** list to select the condition for which the logical expression is fulfilled for an element. Choose **All vertices** to make an element satisfy the expression if it is true for all element vertices, or choose **Some vertex** if it is true for at least one element vertex.

Meshing Examples

Generating a 3D Swept Mesh

Figure 8-12 shows the 3D Swept mesh for a simple geometry but with a layered structure typical for printed circuit boards or MEMS geometries. In such cases, the swept mesh generation presents an alternative to using a free tetrahedral meshing.

	If you have the: • Acoustics Module, see *Vibrations of a Disk Backed by an Air-Filled Cylinder*: Application Library path **Acoustics_Module/Verification_Examples/coupled_vibrations**. • Batteries & Fuel Cells Module, see *Ohmic Losses and Temperature Distribution in a Passive PEM Fuel Cell*: Application Library path **Batteries_and_Fuel_Cells_Module/Thermal_Management/passive_pem**. • Electrodeposition Module, see *Electrodeposition of an Inductor Coil*: Application Library path **Electrodeposition_Module/Tutorials/inductor_coil**. • Chemical Reaction Engineering Module, see *Steam Reformer*: Application Library path **Chemical_Reaction_Engineering_Module/Reactors_with_Porous_Catalysts/steam_reformer**.

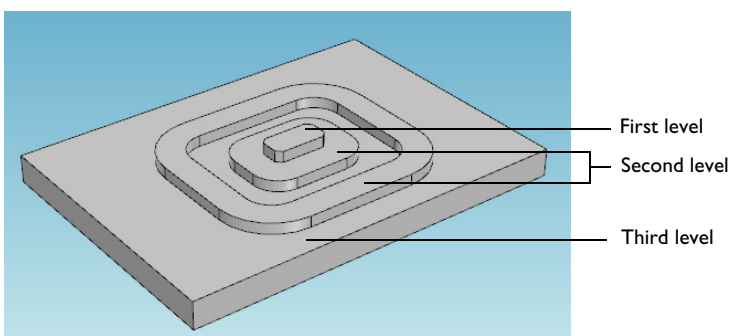

Figure 8-12: An example of the layered geometry used for creating a swept mesh.

1 Add a **Free Triangular** ( ) node from the **Mesh** toolbar, **Boundary** menu ( ) (or right-click the **Mesh** node and select it from the **More Operations** menu.)

2 Add the first level boundary to the selection list (see Figure 8-12 for an example of a suitable geometry).

3 Click **Build Selected** ( ). The mesh below displays.

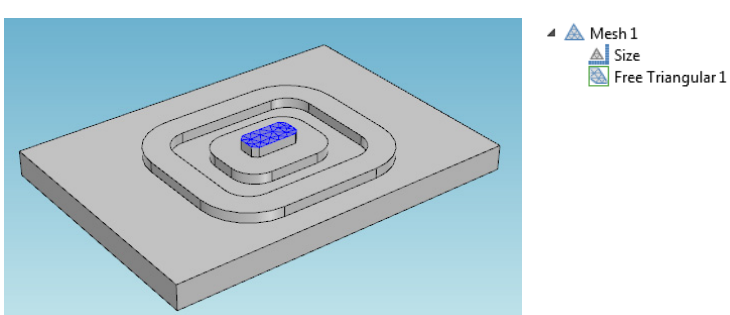

4 Add a **Swept** ( ) node from the **Mesh** toolbar.

5 Select the domain in the first level.

6 Add a **Distribution** ( ) node to the **Swept 1** node.

7 Enter the **Number of elements** in the field (for example, 2).

8 Click **Build Selected** ( ).

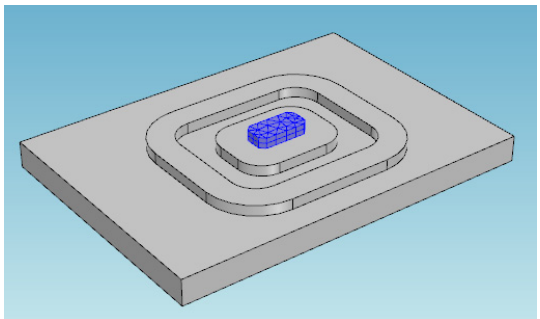

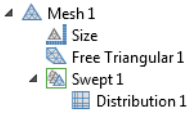

9 Add a second **Free Triangular** ( ) node from the **Mesh** toolbar.

10 Select the boundaries at the second level and click the **Build Selected** button ( ).

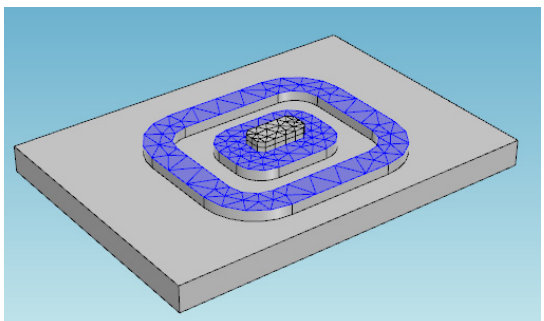

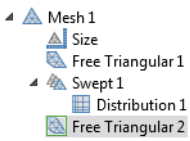

11 Repeat the same swept operations for the first level domains but now for the second level. Add the second **Swept** and **Distribution** nodes.

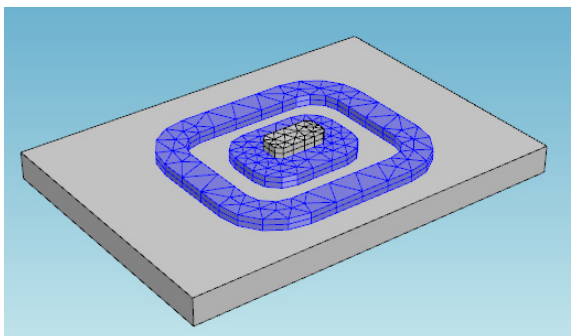

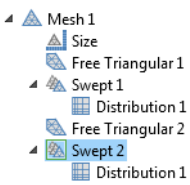

12 Add a third **Free Triangular** mesh operation to mesh the third level boundaries.

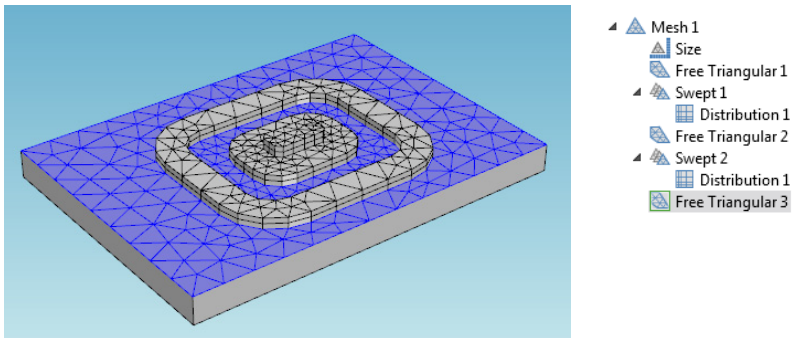

13 Mesh the third level domain. Use the **Swept** mesh operation and enter 4 for the **Number of elements** in the corresponding **Distribution** attribute.

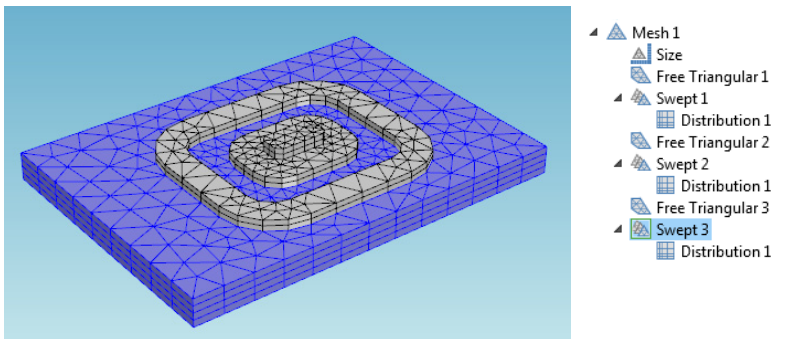

The meshing sequence displayed in the **Model Builder** makes it possible to return to your attribute settings and change mesh sizes and distributions. After making any changes, click the **Build All** button ( ) or press F8 to rebuild the entire meshing sequence.

Using Mesh Control Entities to Control Element Size

Figure 8-13 shows a 2D geometry with two holes and a Bézier Polygon that is intended not to be a part of the model but is included only to control mesh size inside the domain. This example is about Mesh Control Entities and uses a simple geometry.

1 Add a **Mesh Control Edges** ( ) node from the **Geometry** toolbar, **Virtual Operations** menu ( ) (or right-click the **Geometry** node and select it from the **Virtual Operations** submenu).

2 Select the edges of the Bézier Polygon in the **Edges to include** selection.

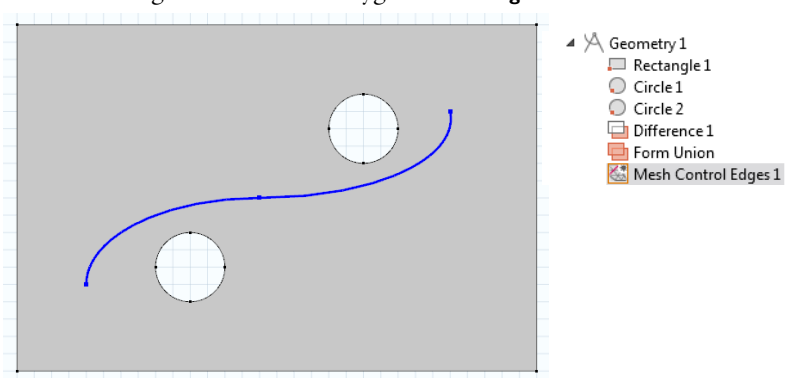

Figure 8-13: A geometry with a Bézier Polygon used to define mesh size inside the domain.

3 Click **Build Selected** ( ). Note that the selected edges are removed.

4 Add a **Free Triangular** ( ) node from the **Mesh** toolbar. Note that the edges removed in the previous step are now visible again.

5 Add a **Size** ( ) node to **Free Triangular 1**.

6 Select Boundary as the Geometric entity level and select the edges of the Bézier Polygon.

7 Select **Extra fine** as the **Predefined** element size.

8 Click the **Build All** button ( ) or press F8 to build the entire mesh. Note that the edges of the Bézier Polygon are now removed (Figure 8-14) and that the only trace of them is the fine mesh size inside the domain.

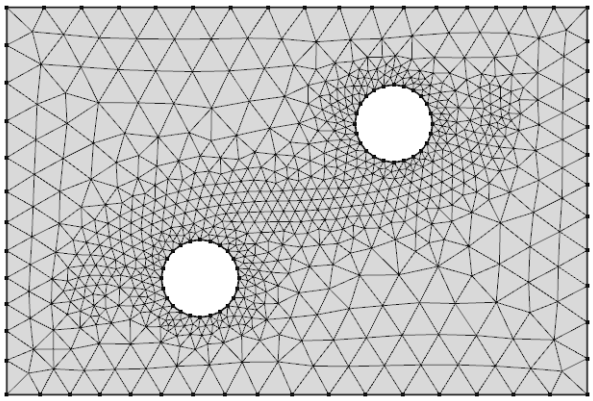

Figure 8-14: Fine mesh inside the domain.

MESH CONTROL FEATURE MODEL EXAMPLES

For an example of the Mesh Control Edges feature:

- If you have the CFD Module, see *Turbulent Flow over a Backward-Facing Step*: Application Library path **CFD_Module/Verification_Examples/turbulent_backstep**.
- If you have the Heat Transfer Module, see *Turbulent Flow over a Backward-Facing Step*: Application Library path **Heat_Transfer_Module/Verification_Examples/turbulent_backstep**.

For an example of the Mesh Control Faces feature:

- If you have the Batteries & Fuel Cells Module, see *Thermal Modeling of a Cylindrical Lithium-Ion Battery in 3D*: Application Library path **Batteries_and_Fuel_Cells_Module/Thermal_Management/li_battery_thermal_3d**.
- If you have the CFD Module, see *Airflow over an Ahmed Body*: Application Library path **CFD_Module/Verification_Examples/ahmed_body**.

Using Structured and Unstructured Mesh with Boundary Layers

This example demonstrates a geometry where free tetrahedral mesh is used in one domain and a swept mesh is used in another domain. The domains are separated by a mesh control face, which is automatically removed once the domains on both sides are meshed. Finally boundary layers are added, without the need to respect the (now removed) mesh control face.

1 Add a **Mesh Control Faces** ( ) node from the **Geometry** toolbar, **Virtual Operations** menu ( ) (or right-click the **Geometry** node and select it from the **Virtual Operations** submenu).

2 Select the face separating the domains in the **Faces to include** selection using the scroll wheel for selecting the interior boundary.

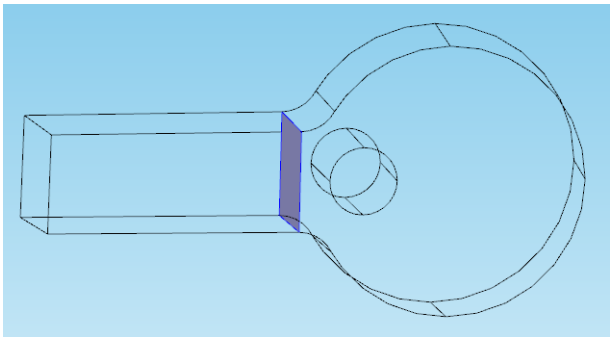

3 Click **Build Selected** ( ). The face is removed. There is now only one domain.

4 Add a **Free Tetrahedral** ( ) node from the **Mesh** toolbar. Note that the face has reappeared and that there are two domains.

5 Add the cylinder-shaped domain with a hole to the selection list.

6 Click the **Size** ( ) node and select **Finer** as the **Predefined** element size. Click **Build Mesh** ( ).

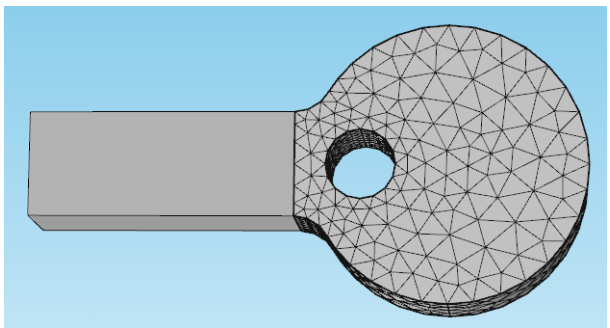

7 Add a **Swept** ( ) node from the **Mesh** toolbar.

8 Add a **Distribution** ( ) node to **Swept 1** from the **Mesh** toolbar.

9 Select **Predefined distribution type** and enter 10 in the **Number of elements** field and 3 in the **Element ratio** field. Click **Build Mesh** ( ).

10 Add a **Boundary Layers** ( ) node from the **Mesh** toolbar.

11 In the **Model Builder**, click the **Boundary Layer Properties** ( ) node under **Boundary Layers 1**.

12 Add (for example) the sides of the geometry to the selection list

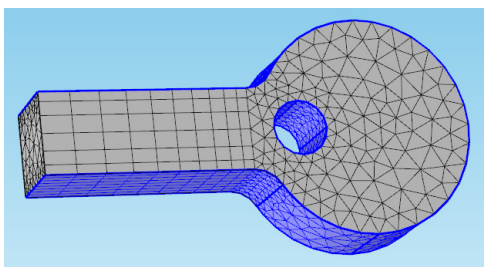

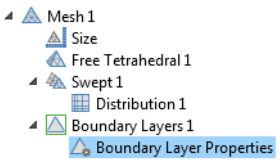

13 Click the **Build Mesh** button ( ) or press F8 to build the entire mesh. The mesh control face is now removed and the boundary layer mesh nodes are not located where the boundary was.

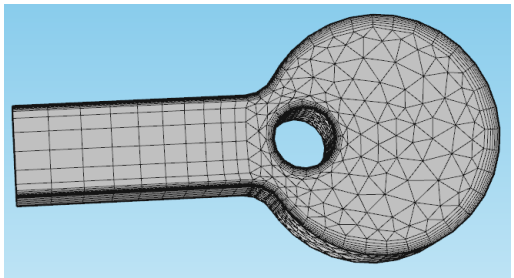

BOUNDARY LAYER MESHING MODEL EXAMPLES

For an example of the Boundary Layer and Boundary Layer Properties features:

- If you have the AC/DC Module, see *Iron Sphere in a 20 kHz Magnetic Field*: Application Library path **ACDC_Module/Tutorials/iron_sphere_20khz_bfield**.
- If you have the Acoustics Module, see *Acoustic Scattering off an Ellipsoid*: Application Library path **Acoustics_Module/Tutorials,_Pressure_Acoustics/acoustic_scattering**.
- If you have the Batteries & Fuel Cells Module, see *Liquid-Cooled Lithium-Ion Battery Pack*: Application Library path **Batteries_and_Fuel_Cells_Module/Thermal_Management/li_battery_pack_3d**.
- If you have the CFD Module, see *Turbulent Flow over a Backward-Facing Step*: Application Library path **CFD_Module/Verification_Examples/turbulent_backstep**.
- If you have the Chemical Reaction Engineering Module, see *Dissociation in a Tubular Reactor*: Application Library path **Chemical_Reaction_Engineering_Module/Thermodynamics/dissociation**.
- If you have the Electrochemistry Module, see *Wire Electrode*: Application Library path **Electrochemistry_Module/Electrochemical_Engineering/wire_electrode**.
- If you have the Heat Transfer Module, see *Turbulent Flow over a Backward-Facing Step*: Application Library path **Heat_Transfer_Module/Verification_Examples/turbulent_backstep**.
- If you have the Plasma Module, see *3D ICP Reactor, Argon Chemistry*: Application Library path **Plasma_Module/Inductively_Coupled_Plasmas/argon_3d_icp**.

9

Materials

This chapter includes information about how to work with materials in models and describes the material databases included with COMSOL Multiphysics® and the add-on modules.

In this chapter:

- Materials Overview
- Working with Materials
- Material Properties Reference
- User-Defined Materials and Libraries
- Using Functions in Materials
- Working with External Materials
- Module-Specific Material Databases

Materials Overview

About Materials and Material Properties

MATERIALS

In COMSOL Multiphysics models, you can add one or more *materials*, which are named collections of *material properties*. Each such material is represented by a **Material** node ( ). Each material includes a number of physical properties with the values or functions (for temperature-dependent material properties, for example) that describe the material.

	When you add a material from a material database or the Material Library, the **Model Builder** node label is copied from the library — for example, **Copper** or **Air**. When you add a **Blank Material**, the default node label is **Material** followed by a number. At any time press F2 to rename a node. The **Settings** window is always called **Material**, irrespective of the current node label. Also see The Settings Window for Material.

MATERIAL PROPERTIES AND PROPERTY GROUPS

The material properties are organized in material *property groups*, which appear as subnodes under the **Material** node in the **Model Builder**:

- The **Basic** property group contains common material properties that can generally be measured and are meaningful without any context.
- User-defined groups may contain a subset of the same quantities.
- Each predefined property group contains one or more material properties that are only meaningful together and in the context of a particular material model.
- The material property values are outputs of the material, which can be constant values or functions of *model inputs* (physical quantities like temperature and pressure). In principle, the physics interfaces first ask a material which inputs it requires to compute its output properties, then ask the material to compute property values given values of the model inputs — for example, thermal conductivity (output) as function of temperature (input). See About Model Inputs.
- Each property group can also define a set of local properties and functions that can be used together with model inputs in output property expressions. This makes it possible to, for example, create generic materials for certain classes of some type of material and use the local properties to parameterize the material.

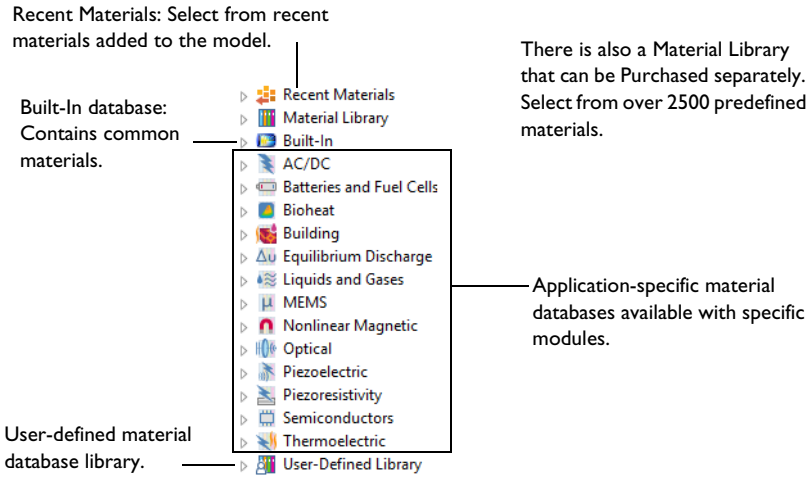

Figure 9-1: Use the Material Browser to select predefined materials in all applications.

All COMSOL Multiphysics modules have predefined material data available in collections of materials — material databases — to build models. The most extensive material data is contained in the separately purchased Material Library, but all modules contain commonly used or module-specific collections of materials. For example, the Built-In database is available to all users but the MEMS database is included with the MEMS Module and Structural Mechanics Module. You can also create custom materials and material libraries by researching and entering material properties.

The **Material Browser** window provides access to all material databases (including the Material Library). The following material databases are available in the Material Browser (some require additional module licenses):

- *Recent Materials*: From the **Recent Materials** folder ( ), select from a list of recently used materials with the most recent at the top. This folder is available after the first time a material is added to a Component node.
- *Material Library*. An optional add-on database, the **Material Library**, contains data for over 2500 materials and 20,000 property functions.
- *Built-In*. Included with COMSOL Multiphysics, the **Built-In** database contains common materials with primarily electrical, structural, and thermal properties. The materials in this database can be considered as examples of common materials with typical values for their material properties. The *Air* and *Water, liquid* materials use the same temperature- and pressure-dependent property values as the corresponding values in the Liquids and Gases Materials Database.
- *AC/DC*. Included in the AC/DC Module, the **AC/DC** database has electric properties for some magnetic and conductive materials.
- *Batteries and Fuel Cells*. Included in the Batteries & Fuel Cells Module, the **Batteries and Fuel Cells** database includes properties for electrolytes and electrode reactions for certain battery chemistries.
- *Bioheat*: Included in the Heat Transfer Module, the **Bioheat** database includes properties for several biological tissues such as bone, fat, human and porcine liver, lung, muscle, myocardium, prostate, and skin.
- *Building*: Included in the Heat Transfer Module, the **Building** database includes hygroscopic and thermal properties for several materials used for structure, sheathing, thermal insulation, and vapor barriers in buildings.
- *Equilibrium Discharge*: Included in the Plasma Module.

- *Liquids and Gases:* Included in the Acoustics Module, CFD Module, Batteries & Fuel Cells Module, Chemical Reaction Engineering Module, Heat Transfer Module, MEMS Module, Microfluidics Module, Pipe Flow Module, and Subsurface Flow Module, the **Liquids and Gases** database includes transport properties and surface tension data for liquid/gas and liquid/liquid interfaces.
- *MEMS:* Included in the MEMS Module and Structural Mechanics Module, the **MEMS** database has properties for MEMS materials: metals, semiconductors, insulators, and polymers.
- *Nonlinear Magnetic:* Included in the AC/DC Module, the **Nonlinear Magnetic** database has properties, such as nonlinear magnetization curves, for a large set of ferromagnetic alloys like various types of steel.
- *Optical*: Included with the Ray Optics Module and Wave Optics Module, the **Optical** database contains frequency-dependent refractive index properties for organic and inorganic materials, glasses, and other materials such as semiconductors.
- *Piezoelectric*: Included in the Acoustics Module, MEMS Module, and Structural Mechanics Module, the **Piezoelectric** database has properties for piezoelectric materials.
- *Piezoresistivity*: Included in the MEMS Module, the **Piezoresistivity** database has properties for piezoresistive materials, including p-type and n-type silicon materials.
- *RF:* Included in the RF Module, the **RF** database includes a number of substrate materials that assist in modeling RF components.
- *Semiconductors:* Included in the Semiconductor Module, the Semiconductors database contains silicon, germanium, gallium arsenide, $Al_xGa_{1-x}As$, gallium nitride (wurtzite and zincblende structures), gallium phosphide, gallium antimonide, indium arsenide, indium phosphide, and indium antimonide materials for use with this module.
- *Thermoelectric*: Included with the Heat Transfer Module and contains bismuth telluride and lead telluride materials for use with the Thermoelectric Effect interface.
- *User-Defined Library:* The **User-Defined Library** folder ( ) is where user-defined material databases (libraries) are created. When you have created a new database, it also displays in the **Material Browser**.

!	The material databases shipped with COMSOL Multiphysics are read-only. This includes the Material Library and any materials shipped with the optional modules.

	• Module-Specific Material Databases • Creating a New Material Library and Adding and Editing Materials

About Using Materials in COMSOL Multiphysics

USING THE MATERIALS IN THE PHYSICS SETTINGS

The physics setup in a model is determined by a combination of settings in the **Materials** and physics nodes. When the first material is added to a Component node, COMSOL Multiphysics automatically assigns that material to all domains in the geometry (or all boundaries or edges if the Component only contains surfaces or edges). Different

geometric entities can have different materials. The following example uses the *heat_sink.mph* model file contained in the Heat Transfer Module and CFD Module Applications Libraries.

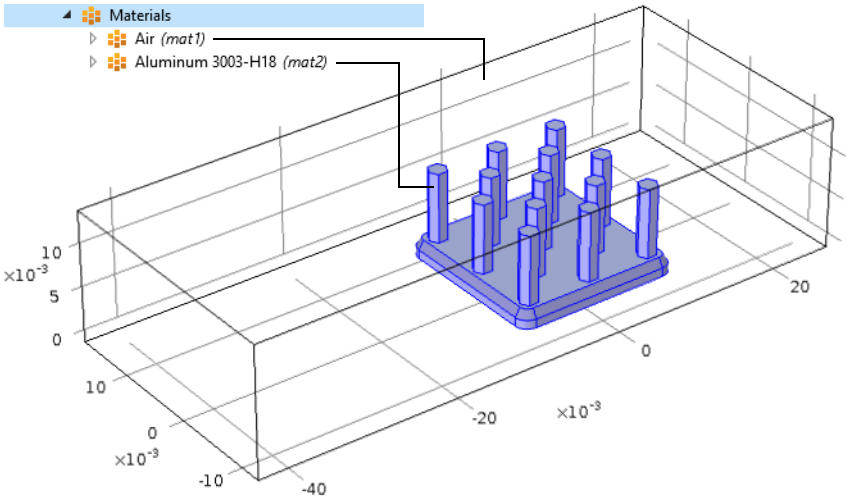

Figure 9-2: Assigning materials to a heat sink model. Air is assigned as the material to the box surrounding the heat sink, and aluminum to the heat sink itself.

If a geometry consists of a heat sink in a container, **Air** can be assigned as the material in the container surrounding the heat sink and **Aluminum** as the heat sink material itself (see Figure 9-2). The **Conjugate Heat Transfer** interface, selected during model setup, uses a **Fluid** model to simulate nonisothermal flow, with heat transfer by convection and conduction, in the box surrounding the heat sink, and a **Heat Transfer in Solids** model to simulate heat conduction in the heat sink. The **Heat Transfer in Solids 1** settings use the material properties associated to the **Aluminum 3003-H18** materials node, and the **Fluid 1** settings define the flow using the **Air** material properties. The other nodes under **Conjugate Heat Transfer** define the initial and boundary conditions.

All physics node properties automatically use the correct material properties from the **Material** nodes when the default **From material** setting is used. This means that one node can be used to define the physics across several domains with different materials; the COMSOL Multiphysics software then uses the material properties from the different materials to define the physics in each domain.

The Settings Window for Material

There are also some physics nodes where you can explicitly select a material from which material properties are retrieved (for example, the **Settings** window for **Fluid Properties** for two-phase flow modeling). The default setting is then typically to use the **Domain material** on each domain (that is, the materials defined on the same domains as the physics that uses the material data). In addition to the **Domain material**, you can select any other material that is present in the Component, regardless of its selection. The selected material's properties are then applied to all domains in the feature's selection.

EVALUATING AND PLOTTING MATERIAL PROPERTIES

You can access the material properties for evaluation and plotting like other variables in a model using the following variable naming conventions and namespaces:

- To access a material property throughout the model (across several materials) and not just in a specific material, use the special material namespace `root.material`. For example, `root.material.rho` is the density ρ as

defined by the materials in each domain in the geometry. For plotting, you can type the expression `material.rho` to create a plot that shows the density of all materials. This shorthand syntax is available for materials in the Basic (def) material property group, but you can also access the density in the Basic material property group namespace as `material.def.rho`.

- For an anisotropic property such as the electrical conductivity, its values are available as `material.def.sigma11`, `material.def.sigma12`, and so on. If such a property is set as isotropic for some material, `material.def.sigma_iso` represents that isotropic value.
- For properties in property groups other than the Basic (def) group, the full namespace must be used, including the property group name. For example, to access the initial yield stress `sigmags` for elastoplastic materials in the Elastoplastic Material Model property group, use `material.ElastoplasticModel.sigmags`.

If you use a temperature-dependent material, each material contribution asks for a special model input. For example, `rho(T)` in a material `mat1` asks for `root.mat1.def.T`, and you need to define this variable (`T`) manually — if the temperature is not available as a dependent variable — to make the density variable work.

- To access a material property from a specific material, you need to know the names for the material and the property group. Typically, for the first material (Material 1) the name is `mat1` and most properties reside in the default **Basic** property group with the name `def`. The variable names appear in the **Variable** column in the table under **Output properties** in the **Settings** window for the property group; for example, `Cp` for the heat capacity at constant pressure. The syntax for referencing the heat capacity at constant pressure in Material 1 is then `mat1.def.Cp`. Some properties are anisotropic tensors, and each of the components can be accessed, such as `mat1.def.k11`, `mat1.def.k12`, and so on, for the thermal conductivity. The numbers 1, 2, and 3 denote the first, second, and third direction, respectively, in the active coordinate system. In the general case, you can define a 3-by-3 tensor, for example, k_{ij} in the order k_{11}, k_{21}, k_{31}, k_{12}, k_{22}, k_{32}, k_{13}, k_{23}, and k_{33}. For material properties that are functions, call these with input arguments such as `mat1.def.rho(pA,T)` where `pA` and `T` are numerical values or variables representing the absolute pressure and the temperature, respectively. Functions can be plotted directly from the function nodes' **Settings** window by first specifying suitable ranges for the input arguments. If a possibly anisotropic property is defined as isotropic, you can access its value as `mat1.def.k_iso`, for example.
- Material Link nodes define all properties of the current source material in the Material Link's namespace. For example, for the node **Material Link 1 (matlnk1)**, the density of the currently selected source material is available as `matlnk1.def.rho`.
- Material Switch nodes define variables similarly to Material Link nodes. For example, during a material sweep over the children of **Switch 1 (sw1)**, you can access the density of the material used in the current sweep step as `sw1.def.rho`.
- Many physics interfaces also define variables for the material properties that they use. For example, `solid.rho` is the density in the Solid Mechanics interface and is equal to the density in a material when it is used in the domains where the Solid Mechanics interface is active. If you define the density in the Solid Mechanics interface using another value, `solid.rho` represents that value and not the density of the material. If you use the density from the material everywhere in the model, `solid.rho` and `material.rho` are identical.
- To see the domain groups (that is, groups of domains with equal material settings), the variable `root.material.domain` — and, for lower-dimensional entities when applicable, `root.material.boundary`, `root.material.edge`, and `root.material.point` — is available and evaluates to unique integer values for each domain group.

THE MATERIAL TYPE SECTION

The **Material type** setting, available on some physics node **Settings** windows, decides how materials behave and how material properties are interpreted when the mesh is deformed. Select **Solid** for materials whose properties change as functions of material strain, material orientation, and other variables evaluated in a material reference configuration (material frame). Select **Non-solid** for materials whose properties are defined only as functions of the current local state at each point in the spatial frame, and for which no unique material reference configuration can be defined. Select **From material** to pick up the corresponding setting from the domain material on each domain.

The Settings Window for Material

Working with Materials

The Material Browser Window

The **Material Browser** window ( ) contains a number of databases with a broad collection of elastic, solid mechanics, electromagnetic, fluid, chemical, thermal, piezoelectric, and piezoresistive properties of materials. The number of material databases depends on which COMSOL products your license includes. See About the Material Databases for information about available material databases. Use the Material Browser to find predefined materials and add them to the Model Builder, or create a custom material library.

Win	To open the **Material Browser** : • On the **Materials** toolbar, click **Browse Materials**. • Right-click the **Materials** node ( ), and then select **Browse Materials**. • From the **Home** toolbar, select **Windows>Material Browser**.

Mac Linux	To open the **Material Browser** : • On the **Model Toolbar**, click **Browse Materials**. • Right-click the **Materials** node ( ), and then select **Browse Materials**. • Select **Windows>Material Browser**.

The **Material Browser** is similar to The Add Material Window but it includes detailed property information about each material. From this window you can also create a new material library and import a material library. See Adding Materials to a Component for information about adding materials to your model's components (geometries). Click **Done** ( ) to close the **Material Browser** and add the materials in the **Added to model** list to the model. Click **Cancel** ( ), press Escape, or click in the main toolbar to exit the **Material Browser** without adding any materials.

Right-click a material library in the **Material Browser** and choose **Reload Selected** ( ) to clear all cached data for that library and force the COMSOL Multiphysics software to reload the content from the file system. This operation is useful, for example, if the library is a user-defined library that has been edited since the COMSOL Multiphysics session started and needs to be reloaded to display the latest contents.

You can browse all of the available material databases or search for specific materials. There is also a **Recent Materials** folder where you find the most recently used materials. **Search** a specific material by name (or, for the Material Library product, by UNS number or DIN number, which are listed in the Material Browser when available).

When browsing the material databases, in particular the **Material Library**, some materials include additional information — UNS number, DIN number, and composition.

As in Figure 9-3, the following information is included in the window to the right of the material tree. Navigate in the material tree and click a material to display the information.

	Material availability is based on the type of COMSOL Multiphysics license. For example, if you have the MEMS Module, you have the **Built-In**, **Liquids and Gases**, **MEMS**, and **Piezoelectric** material libraries.

PROPERTIES

While browsing the databases, predefined material properties for the selected material are listed in a table in the columns **Property**, **Expression**, **Unit**, and the **Property group** to which the material property belongs. If **Property group** is empty, the material property is a **Basic** property.

Under **Property reference**, for the materials in the Material Library product, reference information about a material's properties appears when you click a property above.

INPUTS

For some materials, predefined function inputs are listed in a table in the columns **Input**, **Variable**, and **Unit**. Inputs appear for material properties defined using functions that require the input. Typical inputs are temperature and pressure, for temperature- and pressure-dependent material properties, respectively.

CREATE A NEW MATERIAL LIBRARY OR IMPORT A MATERIAL LIBRARY

Click the **New Material Library** button ( ) to open the **New Material Library** dialog box. You can also right-click a material and select **Add to New Library** ( ) to create a new material library and add that material to the new library. Go to Creating a New Material Library and Adding and Editing Materials.

Click the **Import Material Library** button ( ) to open the **Choose Material Library** dialog box. Go to Importing a Material Library.

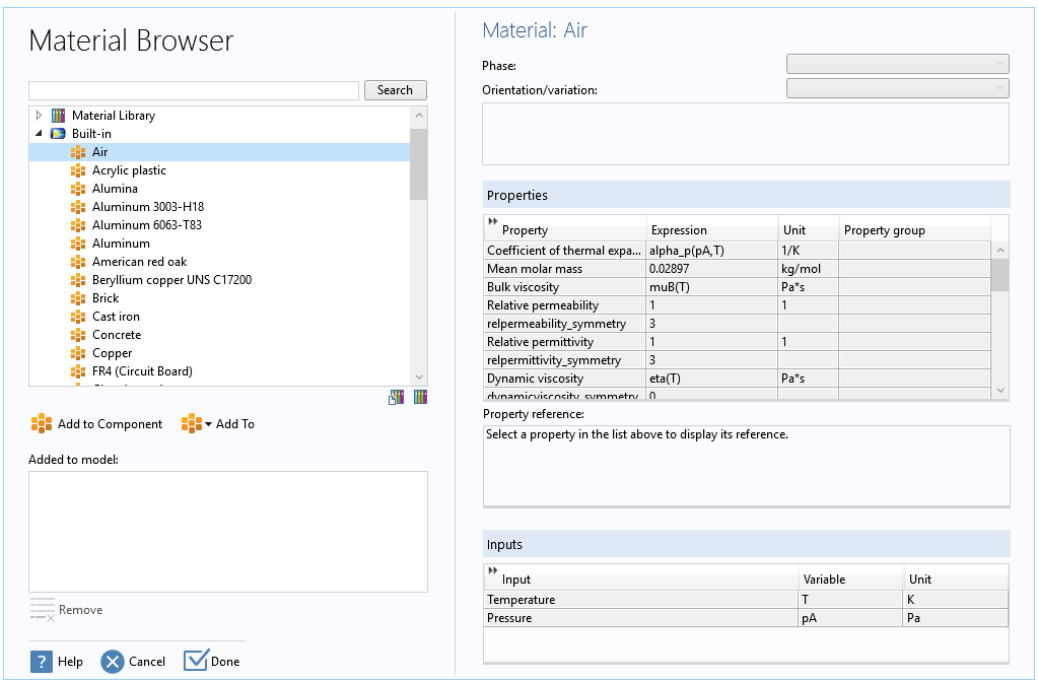

Figure 9-3: The Material Browser details a material's properties after selection. In this example, the properties of Air, selected from the Built-In library, are listed to the right of the Material Browser folders.

The Add Material Window

The **Add Material** window is similar to The Material Browser Window. It has the same material libraries available but does not include the detailed properties about each material. The number of material libraries depends on which COMSOL Multiphysics products your license includes. See About the Material Databases for information about available material databases. This window is a quick way to add materials to models.

To open the **Add Material** window :

- From the **Materials** toolbar, click **Add Material**.
- Right-click the **Materials** node ( ) and select **Add Material from Library**.

As in Figure 9-4, you can browse all the available material databases or search for specific materials. There is also a **Recent Materials** folder where you find the most recently used materials. **Search** a specific material by name (or, for the Material Library product, by UNS number or DIN number).

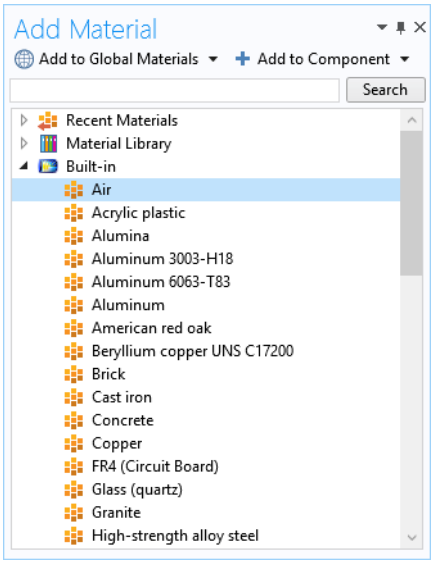

Figure 9-4: The Add Material window. In this example, Air is selected from the Built-In library and can be added to the Material node in the local Component or as a global material in the Model Builder.

ADDING MATERIALS TO A COMPONENT

You can add materials to Component nodes using either the **Add Material** or **Material Browser** windows. In either window, use the **Search** field to find materials by name, UNS number, or DIN number. Or click any of the folders and subfolders to locate and add a specific material. For example, from the left column, click **Built-In** and in the right column, click **Air**. To add a material to the current component, click the **Add to Component** button, right-click the material and choose **Add to Component**, or, in the **Add Material** window, press Enter. In the **Add Material** window you can also add a material to global **Materials** list and to the current selection. In the **Material Browser** window, you can also add the material to the global **Materials** list and to an existing user-defined or new material library.

Using the Add Material Window

1. Open the **Add Material** window (see The Add Material Window).
2. In the **Add Material** window, select a material by phase (liquid, vapor, gas, or solid) and orientation/variation, when available.
3. Click the **Add to Global Materials** or **Add to Component** buttons, or right-click the material and select the same options from the context menu. If there is more than one **Component** node in the model tree, add the material to the applicable geometry.
   - Click the **Add to Global Materials** button to add it under the global **Materials** node.
   - Click the **Add to Component** button to add the material to the active component in the **Model Builder** and then make it an active material in the domains (or other geometric entities) where it is selected. You can also select any of the components in the model to add it to its **Materials** node, or select **Add to Switch 1**, for example, to

add it under a **Switch** node for materials under the global **Materials** node. Right-click the **Material** node to rename it, for example, using the name of the material it represents.

Using the Material Browser Window

1 Open the **Material Browser** window (see The Material Browser Window).

2 In the **Material Browser**, select options from the **Phase** and **Orientation/variation** lists, when available (only included for some materials in the Material Library product). In this window you can review the material **Properties** and **Input** sections.

3 Click the **Add to Component** button ( ) under the list of materials to add the selected material to the current model component. Alternatively, click the **Add To** button ( ) to add the material to the global **Materials** node (choose **Global Materials**), to any available model component, or to an existing or new user-defined material library. You can also right-click the selected material node to add that material to a model component or user-defined material library. Materials that you have selected to add to any of the model components appear in the **Added to model** list.

4 Click **Done** ( ) to add the materials to the model tree in the **Model Builder** and close the **Material Browser**. If it is the first material in that model component, the material in the **Model Builder** becomes the default material; otherwise, the material is initially not used anywhere but becomes the active material in the domains (or other geometric entities) that you pick to add to that material's selection list.

Materials

Use the nodes under **Materials** ( ) to add predefined or user-defined materials, to specify material properties using model inputs, functions, values, and expressions as needed, or to create a custom material library. Also see Material Link, Switch for Materials, Working with External Materials, and About the Material Databases.

You can right-click the **Materials** node and select **Add Materials from Library** to add a material using The Add Material Window or select Browse Materials to open The Material Browser Window for more thorough information about the available materials in the material libraries. Yous can also select **Blank Material** to add a Material node with no predefined material properties.

MATERIAL OVERVIEW

This section provides an overview of the materials in the Component node and where they are used. You can also add materials under **Global Definitions**. To access such global materials in a model component, use a Material Link.

The **Material** column lists the current materials in the Component using the materials' node labels from the model tree according to the settings defined in Displaying Node Names, Tags, and Types in the Model Builder.

The **Selection** column lists the geometric entities selected for the material (the domains, boundaries, or edges where the material is defined).

ERRORS RELATING TO THE MATERIAL NODES

If a material property in a physics interface takes its value from a material and no material is defined for the same geometric selection, a stop sign ( ) displays in the leftmost column and the **Material** column contains **Entities needing a material**. The **Selection** column contains the geometric entities in which a material definition is missing.

The Materials node also indicates when there is a material error (see Figure 9-5). For example, if some property is deleted but needed in a part of the geometry, then the icon indicates where the error is located.

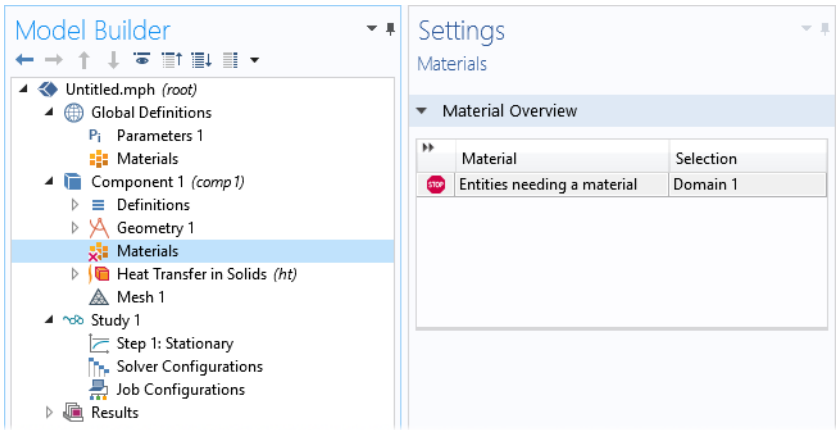

Figure 9-5: An example of a Materials node error.

The Settings Window for Material

The **Settings** window for **Material** ( ) summarizes the predefined or user-defined material properties for a material. This is where you can add or change material properties to fit your model and assign the material to all types of geometric entities: domains (most common), boundaries, edges (3D models only), or points. Also see Material Link and Switch for Materials.

After adding a material (see The Add Material Window and The Material Browser Window), click the Material node (for example, **Material 1** or **Copper**) in the **Model Builder**. The **Settings** window for **Material** opens.

A standard **Material** node in the global component can turn into a layered material by adding a **Shell** property group. After that, it can be linked by a Layered Material Link.

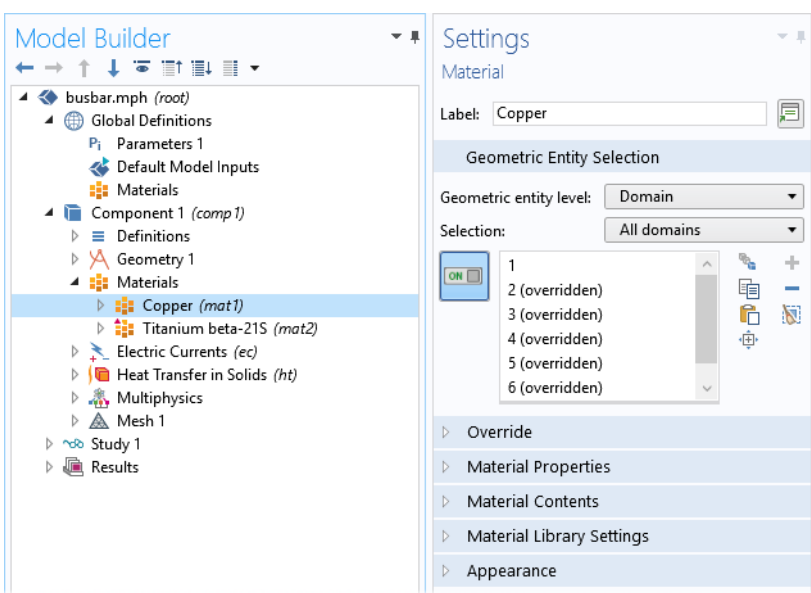

Figure 9-6: Click the Copper node to open the Settings window for Material for the node.

GEOMETRIC ENTITY SELECTION

Assign the material to some or all entities on a specific **Geometric entity level** — **Domain**, **Boundary**, **Edge** (3D only), or **Point** — on the geometry in the **Graphics** window (the geometry in the model).

	By default, the first material in the Component is active in all domains (or all boundaries or edges if the Component only contains surfaces or edges). By assigning other materials to some or all domains, the first material is overridden and remains active only in domains where no other material, added below it in the **Materials** branch, is active.

	If the Component contains features on different geometric entity levels, such as solid mechanics in domains coupled to beams on edges, and the features use the same material, you need to add two Material nodes with the same material, one defined in the domains, and the other defined on the edges.

OVERRIDE

This section shows if the material, in some or all parts of the geometry where it is active, is overridden by another material added underneath it in the Materials branch, or if it overrides another material above it.

The **Overridden by** list shows the names of the materials that override this material. The **Selection** list in the **Geometric Entity** section displays **(overridden)** for the geometric entities in which this material is overridden.

The **Overrides** list shows the names of the materials that this material overrides.

	• Physics Exclusive and Contributing Node Types • Physics and Variables Selection • Physics Node Status

ORIENTATION AND POSITION

	This section only appears in **Material** nodes that are single layer material. See Single-Layer Materials.

Select a **Coordinate system** defining the principal directions of the laminate. Only **Boundary System** coordinate systems can be selected.

Choose a **Position** — **Midplane on boundary**, **Downside on boundary**, **Upside on boundary**, or **User defined**. This controls the possible offset of the material from the geometrical boundary on which the mesh exists (the *reference surface*). For **User defined**, enter a value for the **Relative midplane offset**. The value 1 corresponds to **Downside on boundary**, and the value –1 corresponds to **Upside on boundary**. Values may be outside the range –1 to 1, in which case the reference surface is outside the laminate.

The **Position** setting is only used by physics features where the physical behavior depends of the actual location, such as structural shells.

By clicking the **Layer Cross Section Preview** ( ) button, you get a preview plot of the single layer material, including the location of the reference surface. This plot looks similar to Figure 9-12, but there is only a single layer.

MATERIAL PROPERTIES

You can add material properties to the material if they are not already included. To do so, browse the available material property categories (**Basic Properties**, **Acoustics**, and so on), and select a material property or a collection of material properties in one of the property groups or material models that appear under the main level of material property categories. Right-click the material property or property group and select **Add to Material**, or click the **Add to Material** button (✚) to add the material property or group of properties to the material.

!	Review the properties listed in the **Material Contents** table before adding new material properties.

For example, under **Acoustics>Viscous Model** select **Bulk viscosity (muB)** and right-click to **Add to Material** or click the **Add to Material** button (✚). If you add a material model like the **Viscous Model** with more than one property, all of its material properties are added to the **Material Contents** table. In this example, a **Viscous model** node is added to the **Model Builder** and its associated properties are added to the **Material Contents** table.

💡	To delete a property group, right-click the property group node (in the **Model Builder**) and select **Delete** ( ). The **Basic** property group cannot be deleted.

A Note About Adding Basic Material Properties

Material properties can be added to the **Basic** group or to any **User-Defined Property Group** from two locations — the **Settings** windows for **Material** and **Property Group**.

- When material properties are added from the **Basic** node's or a user-defined group node's **Settings** window for **Property Group**, they are listed under **Output Properties** and **Model Inputs** in that **Settings** window.
- When material properties are added from the **Settings** window for **Material**, the available material properties are listed under **Material Properties** and are added to the list under **Material Contents** with the property group listed. The list under **Material Contents** also contains material properties added from a subnode with a **Settings** window for **Property Group**.

Material Type

The **Material type** setting decides how materials behave and how material properties are interpreted when the mesh is deformed. Select **Solid** for materials whose properties change as functions of material strain, material orientation, and other variables evaluated in a material reference configuration (material frame). Select **Nonsolid** for materials whose properties are defined only as functions of the current local state at each point in the spatial frame and for which no unique material reference configuration can be defined.

Simply put, **Solid** materials associate material properties with specific pieces of the material, and the properties follow the material as it moves around. In particular, a solid material may be inherently anisotropic, meaning that its axes rotate together with the material. The **Nonsolid** choice, in contrast, applies typically to liquids and gases whose properties are associated with fixed points in space and insensitive to local rotation of the material. Such materials are inherently isotropic when studied in isolation but can exhibit anisotropy induced by external fields. In practice, this means that any anisotropic tensor properties in a nonsolid material must be functions of some external vector field.

MATERIAL CONTENTS

This section lists all of the material properties that are defined for the material or required by the physics in the model. The table lists the **Property**, **Variable**, **Value**, and **Unit** for the material property as well as the **Property group** to which the material property belongs. The **Property group** corresponds to the subnodes in the **Model Builder** with the same name. If required, edit the values or expression for the property's **Value**.

The left column provides visual cues about the status of each property:

- A stop sign ( ) indicates that an entry in the **Value** column is required. It means that the material property is required by a physics feature in the model but is undefined. When you enter a value in the **Value** column, the material property is added to its property group.
- A warning sign ( ) indicates that the material property has been added to the material but is still undefined. An entry is only required if the material property is to be used in the model.
- A green check mark ( ) indicates that the property has a **Value** and is currently being used in the physics of the model.
- A synchronize symbol ( ) indicates that the property is computed and synchronized using the given values for other material properties from which it can be computed.
- Properties with no indication in the left column are defined but not currently used by any physics in the model.

You can change the value for any property that is not synchronized by editing its value directly in the **Value** column, or, for a selected property, click the **Edit** button ( ) to enter a value in the window that opens. If the property can be anisotropic, you can choose to enter the values in one of these forms: **Isotropic**, **Diagonal**, **Symmetric**, or **Full**. The **Variable** column lists the variable names corresponding to the degree of anisotropy. For example, for a symmetric electrical conductivity, it contains **{sigma11, sigma12, sigma22, sigma13, sigma23, sigma 33}; sigmaij = sigmaji**. For an isotropic electrical conductivity, it contains **sigma_iso; sigmaii = sigma_iso, sigmaij = 0**, where `sigma_iso` is the name of the variable for the isotropic electrical conductivity (available as, for example, `mat1.def.sigma_iso`).

APPEARANCE

The settings in this section make it possible to control or change the default appearance of a material in the Graphics window when working in the materials or physics parts of the model tree.

	In 3D components, the material is rendered including color and texture when **Scene Light** is active. In 2D models and in 3D components, when **Scene Light** is turned off, only a change of color is visible.

The **Family** list provides quick settings approximating the appearance of a number of common materials — **Air**, **Aluminum**, **Brick**, **Concrete**, **Copper**, **Gold**, **Iron**, **Lead**, **Magnesium**, **Plastic**, **Steel**, **Titanium**, and **Water**. Select **Custom** to make further adjustments of the specific settings for colors, texture, reflectance, and so on. The default custom settings are inherited from the material selected last from the **Family** list.

Specular Color, Diffuse Color, and Ambient Color

For each of these properties, click the **Color** button to assign a **Custom** specular color or select a standard color from the list: **Black**, **Blue**, **Cyan**, **Gray**, **Green**, **Magenta**, **Red**, **White**, or **Yellow**.

The combination of **Specular color**, **Diffuse color**, and **Ambient color** gives a 3D object its overall color:

- **Specular color** is the color of the light of a specular reflection (specular reflection is the type of reflection that is characteristic of light reflected from a shiny surface).
- **Diffuse color** represents the true color of an object; it is perceived as the color of the object itself rather than a reflection of the light. The diffuse color gets darker as the surface points away from the light (shading). As with Ambient color, if there is a texture, this is multiplied by the colors in the texture, otherwise it is as if it has a white texture.
- **Ambient color** is the color of all the light that surrounds an object; it is the color seen when an object is in low light. This color is what the object reflects when illuminated by ambient light rather than direct light. Ambient

color creates the effect of having light hit the object equally from all directions. As with Diffuse color, if there is a texture, this is multiplied by the colors in the texture; otherwise, it is as if it has a white texture.

	For examples of specular, diffuse, and ambient light, which are related to these definitions, see About the 3D View Light Sources and Attributes.

Noise

The **Noise** check box is selected by default, with the default **Normal vector noise scale** and **Normal vector noise frequency** taken from the material. Enter other values as needed, or click to clear the **Noise** check box.

- Noise is a texture that disturbs the normals when calculating lighting on the surface. This causes the surface to look rough and textured.
- Normal vector noise scale is the power of the noise texture. A high value creates a stronger texture of the surface. A value between 0–1 is suitable.
- Normal vector noise frequency is the size of the noise disturbances. A small value creates smaller features on the texture. A value between 0–10 is suitable.

Diffuse and Ambient Color Opacity

The default **Diffuse and ambient color opacity** is 1.

Lighting Model

The default **Lighting model** — **Blinn-Phong** or **Cook-Torrance** — is based on the material. Select **Simple** instead as needed.

The different lighting models provide a set of techniques used to calculate the reflection of light from surfaces to create the appropriate shading. For example, a specular highlight is the bright spot of light that appears on shiny objects when illuminated. Specular highlights are important in 3D computer graphics because they provide a strong visual cue for the shape of an object and its location with respect to light sources in the scene.

For **Blinn-Phong**, the default **Specular exponent** is 64. The specular exponent determines the size of the specular highlight. Typical values for this property range from 1 to 500, with normal objects having values in the range 5 to 20. This model is particularly useful for representing shiny materials.

For **Cook-Torrance**, the default **Reflectance at normal incidence** and **Surface roughness** are taken from the material. The Cook-Torrance lighting model accounts for wavelength and color shifting and is a general model for rough surfaces. It is targeted at metals and plastics, although it can also represent many other materials.

- Reflectance at normal incidence is the amount of incoming light (0–1) from the normal direction (of the surface) that is reflected.
- Surface roughness is a value that describes microreflectance on the surface. Higher values create a rougher look of the surface with fewer highlights. A value from 0–1 is suitable.

Property Groups

The **Settings** window for **Property Group** is where output properties and model inputs are added, local properties are defined, and expressions for material properties are entered in a specific property group such as **Basic**. The property groups are subnodes to a material node. The **Settings** window for **Property Group** is displayed when you click the property group node (for example, **Basic**) under the material node (typically with the material's name — **Aluminum**, for example) in the **Model Builder**.

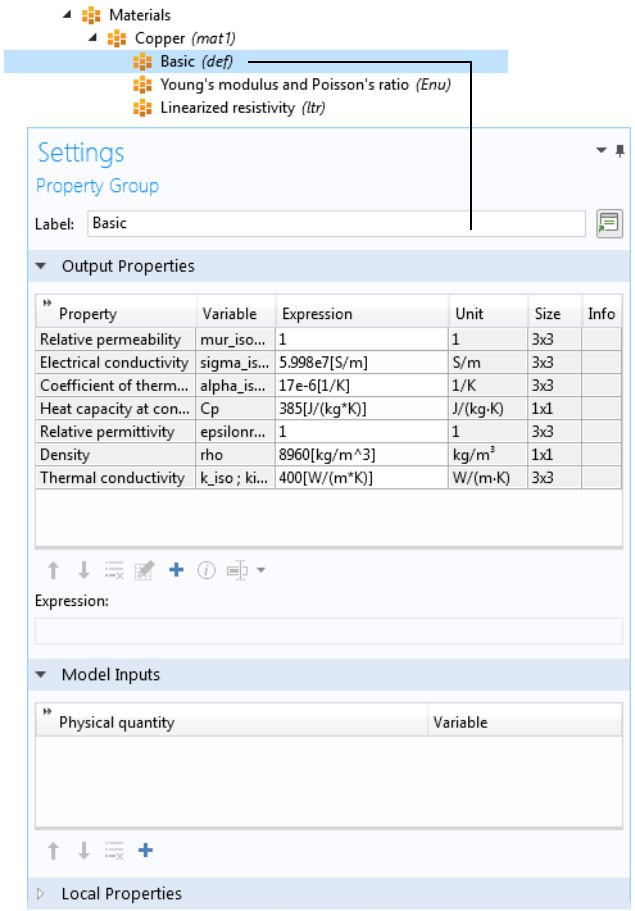

Figure 9-7: An example of a Basic Settings window for Property Group.

A property group under a material creates the following variables:

TABLE 9-1: VARIABLES GENERATED FROM A PROPERTY GROUP

TYPE	VARIABLE NAME	SCOPE	SELECTION	EXAMPLE
Basic property	Variable name of physical quantity	`root.material`	Material selection	`root.material.rho`
		`root.<comp>.<mat>.<group>`	Global selection	`root.comp1.mat1.def.rho`
Output property	Property name	`root.material.group`	Material selection	`root.material.linzRes.alpha`
		`root.<comp>.<mat>.<group>`	Global selection	`root.comp1.mat1.linzRes.alpha`

OUTPUT PROPERTIES

The predefined material properties in the property group appear in a table in the **Output Properties** section.

	It is only possible to add, move, and delete output properties from the **Basic** material properties and with user-defined property groups.

Click the **Add** button ( ) to add another output property, which you choose from one of the available physical quantities in the **Physical Quantity** dialog box that opens.

If required, edit the expressions in the list's **Expression** column. Edit directly in the table or in the **Expression** field underneath the table. You can insert predefined expressions by clicking the **Insert Expression** button ( ) or clicking Ctrl+Space and then choosing an expression from the list of predefined expressions. You can also click the **Edit** button ( ), which opens a dialog box for easier specification of orthotropic and anisotropic material properties (tensors), when applicable. Select **Isotropic**, **Diagonal**, **Symmetric**, or **Full** when entering the data in the material property's dialog box. In the **Expression** column, use a syntax with curly braces such as `{k11, k21, k31, k12, k22, k32, k13, k23, k33}` to enter anisotropic material properties for a 3-by-3 tensor k_{ij} in the order k_{11}, k_{21}, k_{31}, k_{12}, k_{22}, k_{32}, k_{13}, k_{23}, and k_{33}. 1, 2, and 3 represent the first, second, and third direction in the active coordinate system. In many cases (for example, when entering the elasticity matrix for structural mechanics), the matrix must for physical reasons be symmetric. The upper diagonal part of the matrix you enter will then be mirrored when forming the actual constitutive matrix, and the lower diagonal part is ignored.

The **Variable** column lists the variable names depending on the type of anisotropy. For an isotropic k, `k_iso` represents its single scalar value.

The **Unit** and **Size** columns provide information about the unit and size of the output property. The size is 1x1 for a scalar value such as density and 3x3 for a tensor (matrix) quantity such as electrical conductivity.

If desired, you can add information about the property, such as references for its value or expression. To do so, click the **Edit/Show Property Information** button ( ) and enter the property information in the dialog box that opens and then click **OK**. When information is available for a property, and information symbol ( ) appears in the **Info** column.

Use the **Move up** ( ), **Move down** ( ), and **Delete** ( ) buttons to organize the table as needed.

MODEL INPUTS

The model inputs are physical quantities, such as temperature, that are used as inputs in the expressions that define the output properties (for example, to describe a temperature-dependent physical quantity). For example, adding **Temperature** as a model input with the variable name `T` makes it possible to use an expression for the heat capacity at constant pressure C_p, such as `300[J/(kg*K)]*T[1/K]`, which works regardless of the name of the actual dependent variable for temperature in the model that uses the temperature-dependent material. Without the model input, the expression above only works with a temperature variable called `T`.

Click the **Add** button ( ) to add another model input, which you choose from one of the available physical quantities in the **Physical Quantity** dialog box that opens.

Use the **Move up** ( ), **Move down** ( ), and **Delete** ( ) buttons to organize the table as needed.

LOCAL PROPERTIES

Here you can enter a user-defined property by entering its variable name in the **Name** column and its corresponding **Expression** and organizing the table as needed. You can also enter a **Description**, which appears in the **Property** column in the **Material Contents** section of the parent **Material** node. In that node, the **Name** entered here appears in the **Variable** column. These local properties are useful for parameterizing functions that describe material properties if they contain inputs other than those that are model inputs (such as temperature and pressure). For

example, a local property can be a reference value at a certain temperature. Use the **Move up** ( ), **Move down** ( ), and **Delete** ( ) buttons to organize the tables as needed.

	You can use local properties to parameterize a material (for example, to create a generic "template" material for a particular symmetry class of anisotropic materials). You can then adjust the local property values for each instance of the material.

About Automatic Adding of Property Groups to a Material

Material property groups are automatically added to the material node in the **Model Builder**. You can also add additional predefined property groups or create a **User-Defined Property Group** (on the **Materials** toolbar, click **User-defined Property Group** ( ) or right-click the **Material** node). The available properties are collected in property groups according to the physical context.

Each property group has a **Settings** window for **Property Group**. When a **Model Builder** node is clicked (for example, **Basic**), the **Settings** window for **Property Group** displays specific information about that property group. The physical properties for all property groups are summarized in a **Material Contents** table on the **Settings** window for the parent **Material** node.

Material Link

Add a **Material Link** node ( ) under a **Materials** node in a model component to add a link to a material that you have added under the global **Materials** node ( ) and use it as a material in that component's geometry. The **Material Link** node's **Settings** window is similar to the **Settings** window for a material node (see The Settings Window for Material), with the exception that there is no **Material Properties** sections. Instead, it includes the following section:

LINK SETTINGS

From the **Material** list, select the global material that you want to link to:

- Any global material node, to use that material in the component.
- Any **Switch** node, if you want to run a material sweep.
- **None**, to not link to any global material.

Click the **Go to Material** button ( ) to move to the selected material node. Click the **Add Material from Library** button ( ) to add a global material from the material libraries or a new blank global material. The added material then becomes the one selected in the **Material** list.

Switch for Materials

Use the **Switch** node ( ) to switch between materials during a solver sweep. You add the materials as subnodes under the **Switch** node. Right-click to add a **Blank Material** or select **Add Material from Library** to select materials from the libraries in the **Add Material** window.

The switch for materials acts essentially as a switch statement in a programming language; that is, it dynamically selects one of its underlying branches depending on a parameter that can be controlled from the solvers, using a Material Sweep study. The parameter name is constructed based on the tag of the Switch node, using the special namespace `matsw`. For example, the parameter controlling a Switch node on the global level will typically be `matsw.sw1`, while for a component-level Switch it will be `matsw.comp1.sw1`.

During a material sweep, the sweep parameter takes consecutive integer values, starting from one, indicating which material under the switch that should currently provide material properties. You can use the parameter name in

conditional expressions to control also other aspects of the model. Conversely, it is possible to control a material Switch also by manually defining the full switch parameter name in a **Parameters** node. You can then choose the parameter to sweep over in a standard **Parametric Sweep** node or assign it different (integer) values in different parameter **Case** nodes and sweep using a *Parameter switch* sweep.

The **Switch** node's **Settings** window contains the following sections:

MATERIAL CONTENTS

This section lists all of the material properties that are defined for the material or required by the physics in the model on domains where the **Switch** node is the active domain material. The table lists the **Property**, **Name**, **Value**, and **Unit** for the material property as well as the **Property group** to which the material property belongs. The **Property group** corresponds to the subnodes in the **Model Builder** with the same name. If required, edit the values or expression for the property's **Value**.

The list includes properties that are defined by any of the materials under the **Switch** node. The left column provides visual cues about the status of each property:

- A stop sign ( ) indicates that some subnode is missing a required **Value**. That is, the material property is required by a physics feature in the model but is not defined for all switch cases.
- A warning sign ( ) indicates that the material property has been added to some material subnode but is still undefined.
- A green check mark ( ) indicates that the property has a **Value** in all subnodes and is currently being used in the physics of the model.

APPEARANCE

The settings in this section make it possible to control or change the default appearance of the material switch in the Graphics window when working in the materials or physics parts of the model tree. See The Settings Window for Material for more information.

Layered Material

In the **Layered Material** node ( ), you can specify the properties of a multilayer laminate. It is used when defining the properties of the following features:

- The Layered Shell interface (requires the Composite Materials Module).
- **Layered Linear Elastic Material** in the Shell interface (requires the Composite Materials Module).
- **Thin Layer** in the Heat Transfer in Solids interface.
- The Heat Transfer in Shells interface (requires the Heat Transfer Module).
- The Electric Currents, Layered Shell interface (requires the AC/DC Module).

A **Layered Material** node can be present in two locations in the Model Builder:

- The most common place is under **Global Definitions>Materials**. When you reference a layered material from a physics interface, you do it indirectly through either a Layered Material Link or a Layered Material Link (Subnode) under **Materials** in the current component.
- It can also be a subnode under a Layered Material Stack node in a component.

LAYER DEFINITION

In this table you specify the properties of each layer.

Click the **Add** button ( ) to add another table row. Use the **Move up** ( ), **Move down** ( ), and **Delete** ( ) buttons to organize the table as needed. To completely reset the table to its default state, you can use the **Reset to Default** button ( ).

Conceptually, the layers are ordered from bottom to top of the laminate. Enter the following data in the table:

Layer

Here you can assign a name to the layer for future reference. The default is a sequential numbering: Layer 1, Layer 2, and so on.

Material

Select any available material. If the **Layered Material** node is located under **Global Definitions**, the list contains only global materials. If the **Layered Material** node is used as a subnode to a **Layered Material Stack**, also materials defined under **Materials** in the component are available.

When you have a certain row in the table selected, you can access three shortcuts:

- Click the **Blank Material** ( ) button to add a new blank material under global materials. The material is referenced in current row of the **Material** column.
- Click the **Add Material from Library** ( ) button to add a new material under global materials from Material Libraries. The material is referenced in current row of the **Material** column.
- Click the **Go to Material** ( ) button to jump to the definition of the material selected on the current row.

When you add a new row to the table, the same material as on the previous row is selected. This means that if you have many, not adjacent, layers with the same material, it is more efficient to initially add all layers with that same material. Then you can go back and change the material for some layers. Alternatively, you can reorder the layers using the **Move up** ( ) and **Move down** ( ) buttons.

Rotation

If the material in the layer is orthotropic or anisotropic, enter the angle in degrees (positive counterclockwise) from the first principal axis of the laminate to the first principal axis of the layer. Even for an isotropic material, the orientation can matter for result presentation, since it affects the interpretation of for example stress tensor components.

Thickness

Enter the thickness of the layer (default unit: m). The thickness can be numeric value or a scalar parameter.

Mesh elements

In the physics interfaces, the layered materials are handled through the concept of a virtual *extra dimension*. For a layered material defined on a boundary, you can think of that as an extra coordinate in the normal direction. Enter the number of elements that you want in the extra dimension for the layer.

INTERFACE PROPERTY

In some physics features, not only the layers themselves but also the interfaces between them are important. In such a case, you can assign materials to the interfaces in this table. The number of interfaces is one more than the number of layers because the free top and bottom surfaces of the laminate are also considered as interfaces.

In most cases, you do not need to enter anything in this section.

Interface

This is the interface name, for future reference. As a default, the interface name is constructed from the names of the two adjacent layers. For the top and bottom interfaces, the labels “up” and “down” are used for the two exterior sides.

You can rename the interfaces. This is, however, seldom needed.

Position

This column shows the location of the interface. The distance is counted from the bottom of the laminate. The column is for information only, and cannot be modified.

Material

Select the material of the interface. You only need to assign materials to the interfaces that are explicitly referenced by physics features. The default is to take the material **From layer**. The interface material properties are then computed from the adjacent layers' material properties.

Figure 9-8 shows an example of the settings for a layered material. The layer names have been entered manually, whereas the interfaces have retained their default names.

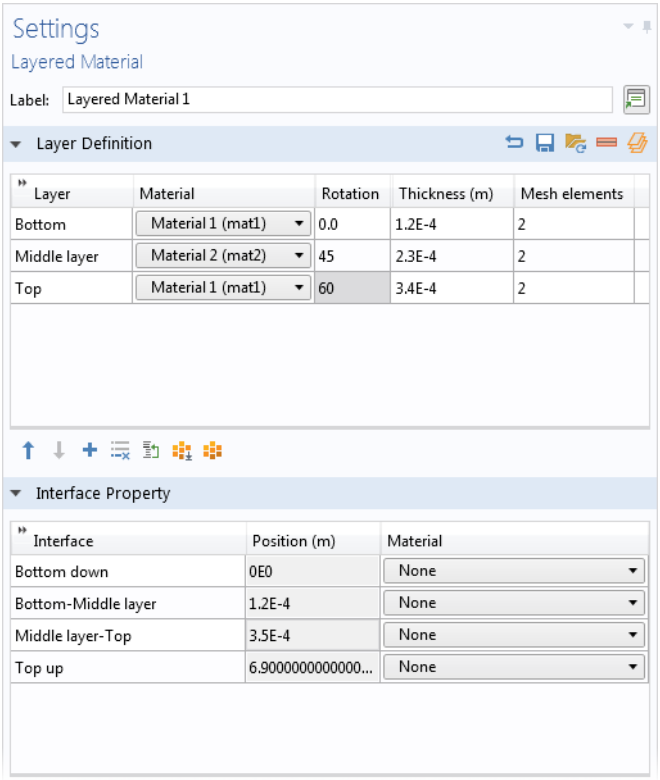

Figure 9-8: Settings for a material with three layers.

You can save the laminate definition to a text file by clicking the **Save Layers to File** ( ) button. For the example above, the text file has the following contents:

```
Bottom mat1 0.0 1.2E-4 2
"Middle layer" mat2 45 2.3E-4 2
Top mat1 60 3.4E-4 2
```

To load a text file on this format, click the **Load Layers from File** ( ) button. For complex laminates, it may be easier to start by creating the text file representation in a text editor, than to enter the data in the GUI.

	When loading a file, the second column containing the material tag is ignored. The reason is that there is no way to ascertain that a material tag like '`mat2`' would point to the same material in another context. You can even load a file where that column is absent.

You have two options for visualizing the laminate defined in the **Layered Material** node. To see the thickness of each layer, click the **Layer Cross Section Preview** ( ) button. This will give a plot like the one shown in Figure 9-9.

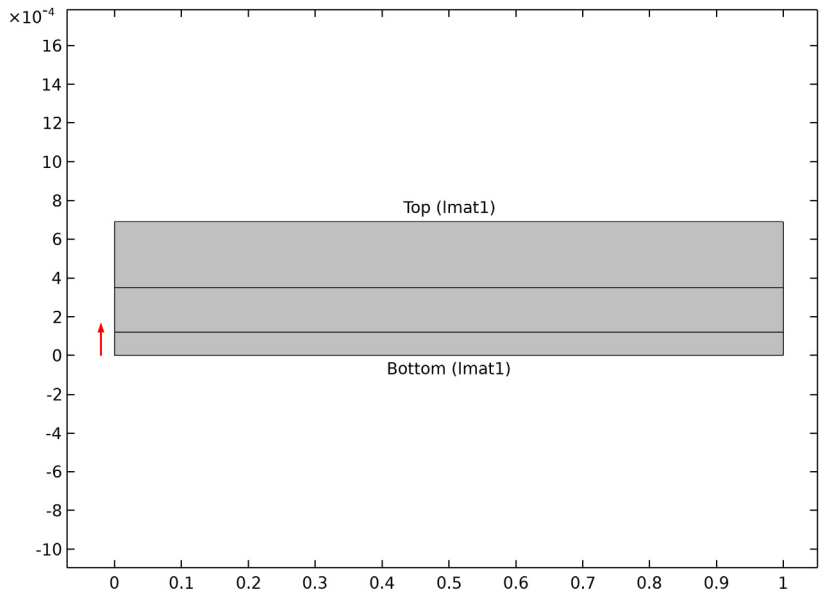

Figure 9-9: The layer cross section plot for a material with three layers.

To visualize the layer orientations, click the **Layer Stack Preview** ( ) button. In Figure 9-10, an example of such a plot is shown. The x-axis corresponds to the principal laminate direction, and the stripes indicate the principal direction of each layer.

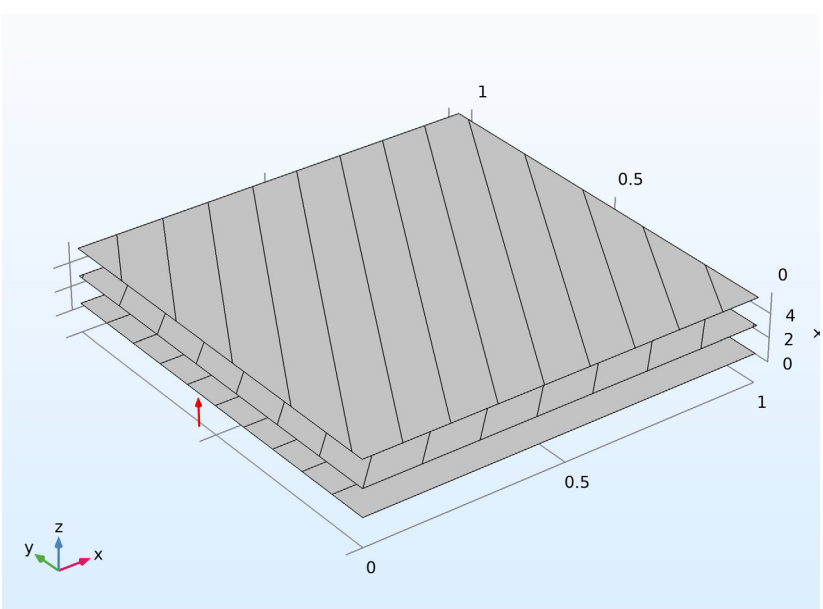

Figure 9-10: The layer stack preview plot for a material with three layers.

PREVIEW PLOT SETTINGS

In this section, you can fine-tune the display in the preview plots.

In the **Distance between the orientation lines** text field, you can enter a value for the spacing of the stripes showing the orientation of the principal orientation of the layer. The layer itself is always drawn as a square with the unity side length. If you deselect the corresponding check box, no orientation lines are drawn.

The value of the **Thickness-to-width ratio** is used by both types of preview plots.

- In a layer stack preview plot, it controls the height of the stack in the z direction. For laminates with many layers, you may need to increase this value.
- In the layer cross section preview plot, it controls the height in the y direction. The width is always unity.

Clear the **Shows labels in cross section plot** check box to remove the text labels showing layer names and materials.

Layered Material Link

The **Layered Material Link** node ( ) provides a bridge from a Layered Material, located under **Global Definitions**, to a physics feature residing in a component. A physics feature designed to work with layered materials cannot directly reference a **Layered Material**. The **Layered Material Link** node is located in the **Layers** submenu under a **Materials** node.

LAYERED MATERIAL SETTINGS

Select a layered material from the **Material** list. You can also select a Switch for Materials.

By clicking the **Go to Material** ( ) button, you can jump to the settings for the selected material.

Click the **Add Layered Material** button ( ) to add another **Layered Material** or a **Switch**. The added material then becomes the one selected in the **Material** list.

From the **Transform** list, choose one of the following options:

- **None** (the default), for no transformation.
- **Symmetric** or **Antisymmetric**, to create a symmetric or antisymmetric layered material when the information of layers of one side of the midplane is supplied. Choose which side to mirror in from the **Mirror in** list: **Upside** (the default) or **Downside**. Upside means that the symmetry layers are on the top of the original layers. The symmetry line is the top-side boundary. Downside means that the symmetry layers are on the bottom of the original layers. The symmetry line is the bottom-side boundary. Select the **Merge middle layers** check box to merge the two middle layers into one to create an odd symmetric layer.
- **Repeated**, to create a number of repeating stacks, which you enter in the **Number of repeats** field (default: 1).

Select the **Scale** check box to scale the layered material's thickness with a factor (default: 1).The scale can be a numerical value, a parameter, or an expression. Such an expression can, for example, be a function of the coordinates so that a surface with variable thickness can be described.

	If a single layer in a laminate has a variable thickness, you can define that layer in either a separate **Layered Material** or in a **Single Layer Material**. • When using a **Layered Material**, apply the scaling expression in a **Layered Material Link**, and then use a **Layered Material Stack** to build the complete laminate. • When using a **Single Layer Material** with an expression for the thickness, use a **Layered Material Stack** to build the complete laminate.

If you have defined a layer with a scaling factor, it appears in the preview window with a darker color than a nonscaled layer.

	The preview is not shown in the base geometry space, so it will not show any geometrical dependency.

The labels of the newly created layers include a suffix to distinguish them from the original layers:

- **(sym)** for the symmetric layers.
- **(asym)** for the antisymmetric layers.
- **(repX)** for the repeated layers (number X).

Click the **Layer Cross Section Preview** button (to plot a preview of the layer cross section including the transformation (see the following plot for an example).

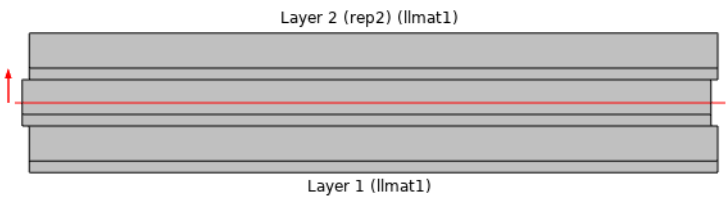

Figure 9-11: A repeat laminated stacks with 2 times repeated layers.

Click the **Layer Stack Preview** button ( ) to get a preview of the stack with the transformation.

ORIENTATION AND POSITION

Select a **Coordinate system** defining the principal directions of the laminate. The orientation of each layer, given in the **Layered Material** node, is a rotation from the first coordinate axis of this coordinate system. Only **Boundary System** coordinate systems can be selected.

Choose a **Position** — **Midplane on boundary**, **Down side on boundary**, **Up side on boundary**, or **User defined**. This controls the possible offset of the layered material from the geometrical boundary on which the mesh exists (the *reference surface*). For **User defined**, enter a value for the **Relative midplane offset**. The value 1 corresponds to **Down side on boundary**, and the value –1 corresponds to **Up side on boundary**. Values may be outside the range –1 to 1, in which case the reference surface is outside the laminate.

The **Position** setting is only used by physics features where the physical behavior depends of the actual location, such as structural shells.

By clicking the **Layer Cross Section Preview** ( ) button, you get a preview plot of the layered material, including the location of the reference surface (Figure 9-12). The height of the laminate in the plot is controlled by the value of the **Thickness-to-width ratio** specified in the **Preview Plot Settings** for the selected layered material.

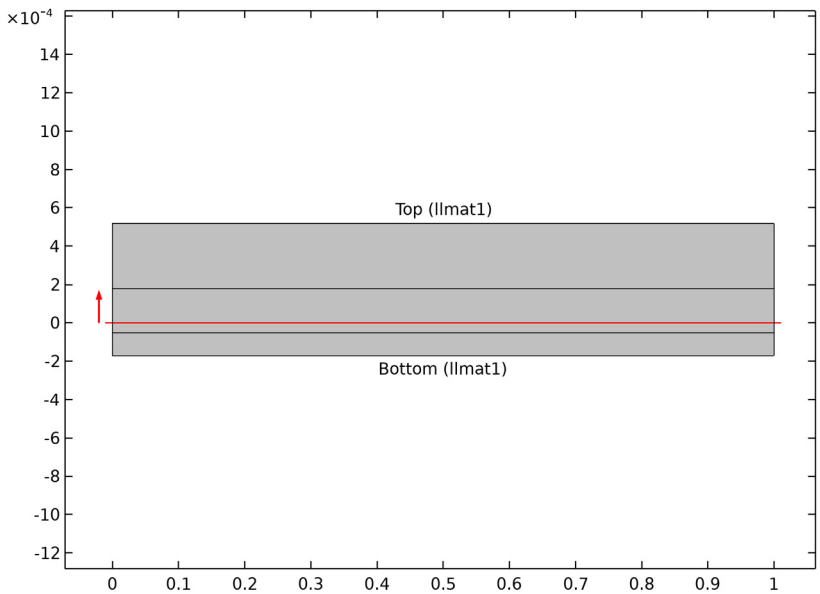

Figure 9-12: Layer cross section preview plot with relative offset set to 0.5.

NONLAYERED MATERIAL SETTINGS

In some cases, a single standard material definition is needed on the same boundary as a layered material. This can, for example, be the case if two different physics interfaces are active on the same boundary, but only one of them supports a layered material definition. You can select any nonlayered material from the **Material** list. The default settings is **Same as layered material**, which means that the nonlayered material properties are computed as an average value of the layer's material properties. This selection is completely analogous to using a Material Link.

	You cannot use an ordinary **Material** or **Material Link** with the same selection as the **Layered Material Link**. These nodes override each other.

By clicking the **Go to Material** ( ) button, you can jump to the settings for the selected material.

Click the **Add Material from Library** button ( ) to add a global material from the material libraries or a new blank global material. The added material then becomes the one selected in the **Material** list.

PREVIEW PLOT SETTINGS

In this section, you can fine-tune the display in the preview plot.

The value of the **Thickness-to-width ratio** controls the height in the *y* direction. The width is always unity.

Deselect the **Shows labels in cross-section plot** check box to remove the text labels showing layer names and materials.

MATERIAL CONTENTS

See the documentation for Material Contents for the **Material** node.

The **Value** column will usually contain the string `Layer`, indicating that the actual value is layer dependent.

APPEARANCE

See the documentation for Appearance for the **Material** node.

Layered Material Stack

In the **Layered Material Stack** node ( ), you can compose a new layered material by stacking other layered materials (including Material nodes that define single-layer materials) on top of each other. There are three main reasons why you may want to do this:

- The layup is repetitive, say with the same four layers repeated five times. Rather than defining twenty layers in a **Layered Material** node, you define four, and then add this definition five times in a **Layered Material Stack**.
- There are layer drop-offs, that is some layers are not present everywhere in the structure. Then, it is efficient to create only subsets of the laminate in **Layered Material** nodes, and use a number of **Layered Material Stack** nodes to combine them into different configurations.
- Two **Layered Material Stack** nodes can have parts of their definitions linked to the same **Layered Material** node. When a transition through a continuity feature is used, the corresponding layers in two laminates defined as stacks can be connected automatically.

The **Layered Material Stack** node is located in the Layers submenu under a Materials node. To compose the stack, you add subnodes to the **Layered Material Stack**. These subnodes can be either a Layered Material or a Layered Material Link (Subnode). You can add any number of subnodes, and mix the two types. The order of the subnodes determines the ordering of the layers in the final laminate.

	The interface between the two **Layered Material Stack** nodes takes the interface material from the first **Layered Material Stack** node and ignores the interface material of the second **Layered Material Stack** node.

LAYERED MATERIAL SETTINGS

From the **Transform** list, choose one of the following options:

- **None** (the default), for no transformation.
- **Symmetric** or **Antisymmetric**, to create a symmetric or antisymmetric layered material when the information of layers of one side of the midplane is supplied. Choose which side to mirror in from the **Mirror in** list: **Upside** (the default) or **Downside**. Upside means that the symmetry layers are on the top of the original layers. The symmetry line is the top-side boundary. Downside means that the symmetry layers are on the bottom of the original layers. The symmetry line is the bottom-side boundary. Select the **Merge middle layers** check box to merge the two middle layers into one to create an odd symmetric layer.
- **Repeated**, to create a number of repeating stacks, which you enter in the **Number of repeats** field (default: 1).

Select the **Scale** check box to scale the layered material's thickness with a factor (default: 1). If you have defined a layer with a scaling factor, it appears in the preview window with a darker color than a nonscaled layer.

	The preview is not shown in the base geometry space, so it will not show any geometrical dependency.

The labels of the newly created layers include a suffix to distinguish them from the original layers:

- **(sym)** for the symmetric layers.
- **(asym)** for the antisymmetric layers.
- **(repX)** for the repeated layers (number *X*).

Click the **Layer Cross Section Preview** button (to plot a preview of the layer cross section including the transformation. Click the **Layer Stack Preview** button ( ) to get a preview of the stack with the transformation.

	A combination of transformations can be made by defining the transformations for both the **Layered Material Stack** node and a **Layered Material Link** subnode.

ORIENTATION AND POSITION

Select a **Coordinate system** defining the principal directions of the laminate. The orientation of each layer, given in the **Layered Material** node, is a rotation from the first coordinate axis of this coordinate system. Only **Boundary System** coordinate systems can be selected.

Choose a **Position** — **Midplane on boundary**, **Down side on boundary**, **Up side on boundary**, or **User defined**. This controls the possible offset of the layered material from the geometrical boundary on which the mesh exists (the *reference surface*). For **User defined**, enter a value for the **Relative midplane offset**. The value 1 corresponds to **Down side on boundary**, and the value –1 corresponds to **Up side on boundary**. Values may be outside the range –1 to 1, in which case the reference surface is outside the laminate.

The **Position** setting is only used by physics features where the physical behavior depends of the actual location, such as structural shells.

By clicking the **Layer Cross Section Preview** ( ) button, you get a preview plot of the stacked layered material, including the location of the reference surface. In Figure 9-13, a laminate composed of three stacked layered materials, each consisting of three layers is shown. Note that there is a slight indentation, used for emphasizing the transition from one part of the stack to the next.

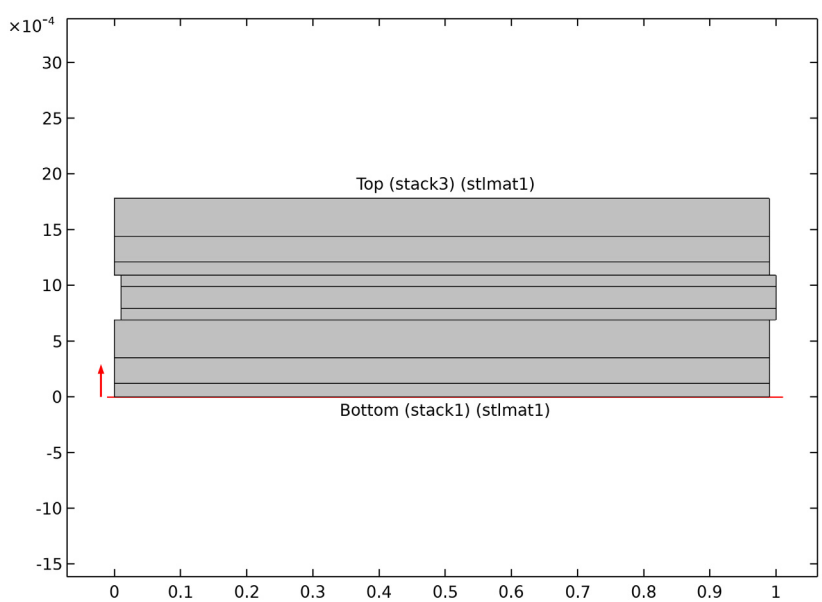

Figure 9-13: Layer cross section preview plot with relative offset set to Down side on boundary.

NONLAYERED MATERIAL SETTINGS

In some cases, a single standard material definition is needed on the same boundary as a layered material. This can for example be the case if two different physics interfaces are active on the same boundary, but only one of them supports a layered material definition. You can select any nonlayered material from the **Material** list. The default

settings is **Same as layered material**, which means that the nonlayered material properties are computed as an average value of the layer's material properties. This selection is completely analogous to using a Material Link.

	You cannot use an ordinary **Material** or **Material Link** with the same selection as the **Layered Material Stack**. These nodes override each other.

By clicking the **Go to Material** ( ) button, you can jump to the settings for the selected material.

Click the **Add Material from Library** button ( ) to add a global material from the material libraries or a new blank global material. The added material then becomes the one selected in the **Material** list.

PREVIEW PLOT SETTINGS

In this section, you can fine-tune the display in the preview plot.

The value of the **Thickness-to-width ratio** controls the height in the *y* direction. The width is always unity.

Deselect the **Shows labels in cross-section plot** check box to remove the text labels showing layer names and materials.

MATERIAL CONTENTS

See the documentation for Material Contents for the **Material** node.

The **Value** column will usually contain the string `Layer`, indicating that the actual value is layer dependent.

APPEARANCE

See the documentation for Appearance for the **Material** node.

Layered Material Link (Subnode)

The **Layered Material Link** subnode ( ) is used for referencing a Layered Material from a Layered Material Stack node. You can add any number of **Layered Material Link** subnodes under a **Layered Material Stack** node.

LINK SETTINGS

Select a layered material from the **Material** list.

By clicking the **Go to Material** ( ) button you can jump to the settings for the selected material.

Click the **Add Layered Material** button ( ) to add another **Layered Material** or a **Switch**. The added material then becomes the one selected in the **Material** list.

From the **Transform** list, choose one of the following options:

- **None** (the default), for no transform.
- **Symmetric** or **Antisymmetric**, to create a symmetric or antisymmetric layered material when the information of layers of one side of the midplane is supplied. Choose which side to mirror in from the **Mirror in** list: **Upside** (the default) or **Downside**. Upside means that the symmetry layers are on the top of the original layers. The symmetry line is the top-side boundary. Downside means that the symmetry layers are on the bottom of the original layers. The symmetry line is the bottom-side boundary. Select the **Merge middle layers** check box to merge the two middle layers into one to create an odd symmetric layer.
- **Repeated**, to create a number of repeating stacks, which you enter in the **Number of repeats** field (default: 1).

Select the **Scale** check box to scale the layered material's thickness with a factor (default: 1). The scale can be a numerical value, a parameter, or an expression. Such an expression can, for example, be a function of the coordinates so that a surface with variable thickness can be described.

	If a single layer in a laminate has a variable thickness, you can define that layer in either a separate **Layered Material** or in a **Single Layer Material**. • When using a **Layered Material**, apply the scaling expression in a **Layered Material Link**, and then use a **Layered Material Stack** to build the complete laminate. • When using a **Single Layer Material** with an expression for the thickness, use a **Layered Material Stack** to build the complete laminate.

If you have defined a layer with a scaling factor, it appears in the preview window with a darker color than a nonscaled layer.

	The preview is not shown in the base geometry space, so it will not show any geometrical dependency.

The labels of the newly created layers include a suffix to distinguish them from the original layers:

- **(sym)** for the symmetric layers.
- **(asym)** for the antisymmetric layers.
- **(repX)** for the repeated layers (number X).

Click the **Layer Cross Section Preview** button (to plot a preview of the layer cross section including the transform. Click the **Layer Stack Preview** button ( ) to get a preview of the stack with the transform.

Single-Layer Materials

To add a single-layer material, choose **Single Layer Material** ( ) from the global **Materials** node's context menu or the **Layers** submenu on the context menu of a **Materials** node in a component. Then, a **Material** node is created with some additional settings (see The Settings Window for Material) and a **Shell** property group (see Geometric Properties (Shell)) with a default thickness of 10^{-4} m. You can also switch an **Material** node into a single-layer material by adding a **Shell** property group and define a thickness, and it can also turn into a single-layer material when you specify a value for the requested thickness in the **Material Contents** table, which appears when a layered shell feature requests the material properties from a standard material. The thickness for a single-layer material can be defined as a numerical value, a parameter, or an expression. Such an expression can, for example, be a function of the coordinates so that a surface with variable thickness can be described.

	If a single layer in a laminate has a variable thickness, you can define that layer in either a separate **Layered Material** or in a **Single Layer Material**. • When using a **Layered Material**, apply the scaling expression in a **Layered Material Link**, and then use a **Layered Material Stack** to build the complete laminate. • When using a **Single Layer Material** with an expression for the thickness, use a **Layered Material Stack** to build the complete laminate.

Single-layer materials provide a quick way to define data for a nonlayered material to be used in physics feature designed for layered materials. Using a single-layer material is equivalent to defining a **Layered Material** with only one layer and then referencing it through a **Layered Material Link**. A single-layer material can be linked by a Layered Material Link, and it can also e a stack member of a Layered Material Stackl or a switch member of a Switch for Materials.

Material Properties Reference

The material properties for the predefined materials are accessible from most physics interfaces. Using this information, either create a material property group or define a completely new material.

In the **Basic>Property Group** window, you can add **Output Properties** under the **Quantities** subsection. You can also add **Model Inputs** to, for example, create a temperature-dependent material property.

About Model Inputs

Model inputs is a special type of parameter in physics features or physics properties where you can choose from a list of announced variables (typically field quantities such as temperature, concentration, or electric field, where vector fields have three components). Model inputs can also be used as an input to a **Property Group** under a material to represent, for example, a temperature-dependent material property. If the property group specifies that it supports one or more model inputs, any physics feature that uses the group's material will display those model input lists in the **Model Inputs** section of the physics node's **Settings** window. Any physical quantity in COMSOL Multiphysics can be used as a model input.

Model inputs are always available as default model inputs. See Default Model Inputs.

All physical quantities that can act as model inputs declare and define common variables that are always available (for example, `minput.T` for the temperature T).

	To define the absolute pressure for heat transfer, see the settings for the Fluid node. To define the absolute pressure for a Fluid Flow interface, see the settings for the Fluid Properties node (described for the Laminar Flow interface). If you have a license for a Nonisothermal Flow interface, see that documentation for further information.

	Model Inputs and Multiphysics Couplings

About the Output Material Properties

	Some of these material groups are only used by physics interfaces in the add-on modules and detailed information is in the applicable documentation.

This section describes all available property groups and the material properties that they contain. These material properties can be added to models from two **Settings** windows: the **Material** node's window and its subnodes' **Property Group** windows.

The Basic group contains over 25 basic properties for use with all materials.

	Materials

BASIC MATERIAL PROPERTIES

These common material properties belong to the **Basic** property group.

- When this information is accessed from the **Basic>Property Group** window, it is listed under **Quantities>Output Properties** and **Variable** is listed in the table.
- When this information is accessed from the **Material** window, it is listed under **Material Properties>Basic Properties** and **Name** is listed in the table under **Material Contents**.

TABLE 9-2: BASIC MATERIAL PROPERTIES

PROPERTY	NAME/VARIABLE	SI UNIT
Absorption Coefficient	kappaR	1/m
Activation Energy	dE	J/mol
Bulk Viscosity	muB	Pa·s
Characteristic Acoustic Impedance	Z	Pa·s/m
Coefficient of Hygroscopic Swelling	beta_h_iso, beta_h*ii*	m^3/kg
Coefficient of Thermal Expansion	alpha	1/K
Compressibility of Fluid	chif	1/Pa
Density	rho	kg/m^3
Diffusion Coefficient	D	m^2/s
Dynamic Viscosity	mu	Pa·s
Electrical Conductivity	sigma	S/m
Electron Mobility	mue	m^2/(Vs)
Extinction Coefficient	betaR	1/m
Frequency Factor	A	1/s
Heat Capacity at Constant Pressure	Cp	J/(kg·K)
Isotropic Structural Loss Factor	eta s	1
Mass Flux	Mf	kg/(m^2·s)
Mean Molar Mass	Mn	kg/mol
Permeability	kappa	m^2
Poisson's Ratio	nu	1
Porosity	epsilon	1
Ratio of Specific Heats	gamma	1
Relative Permeability	mur	1
Relative Permittivity	epsilonr	1
Resistivity	res	Ω·m
Scattering Coefficient	sigmaS	1/m
Seebeck Coefficient	S	V/K
Shifted Magnetic Field	shiftedH	A/m
Speed of Sound	cp	m/s
Storage	S	1/Pa

TABLE 9-2: BASIC MATERIAL PROPERTIES

PROPERTY	NAME/VARIABLE	SI UNIT
Surface Emissivity	epsilon rad	1
Thermal Conductivity	k	W/(m·K)
Thermal Conductivity Supplement	b	1
Vapor Permeability	delta_p	s
Vapor Resistance Factor	mu_vrf	1
Water Content	w_c	kg/m^3
Young's Modulus	E	Pa

The coefficient of thermal expansion (CTE) and the resistivity temperature coefficient have the SI unit 1/K. COMSOL Multiphysics translates this into the Fahrenheit temperature unit using an offset. This translation means that you do not get the expected results.

Use caution when a model uses the coefficient of thermal expansion or the resistivity temperature coefficient and the unit system's temperature is not kelvin.

The rest of the material properties are grouped by application area:

- Acoustics Material Properties
- Electrochemistry Material Properties
- Electromagnetic Models
- Equilibrium Discharge
- Gas Models
- Geometric Properties (Shell)
- Magnetostrictive Models
- Piezoelectric Models
- Piezoresistive Models
- Semiconductors Material Properties
- Solid Mechanics Material Properties
- Solid Mechanics Material Properties: Nonlinear Structural Materials Module
- Solid Mechanics Material Properties: Fatigue Module
- Solid Mechanics Material Properties: Geomechanics Material Model

Acoustics Material Properties

Under Acoustics, you find the following acoustic material models with their associated material properties: a **Poroacoustics Model**, a **Thermoviscous Acoustics Model**, and a **Viscous Model**.

These material property groups (including their associated physical properties) can be added to models from the **Material** window. These property groups are used by the Acoustics Module.

TABLE 9-3: ACOUSTICS MATERIALS

PROPERTY GROUP AND PROPERTY	NAME/VARIABLE	SI UNIT
NONLINEAR MODEL		
Parameter of nonlinearity	BA	1
POROACOUSTICS MODEL		
Flow resistivity	Rf	$Pa·s/m^2$
Thermal characteristic length	Lth	m

TABLE 9-3: ACOUSTICS MATERIALS

PROPERTY GROUP AND PROPERTY	NAME/VARIABLE	SI UNIT
Viscous characteristic length	Lv	m
Tortuosity factor	tau	1
THERMOVISCOUS ACOUSTICS MODEL		
Bulk viscosity	muB	Pa·s
Density	rho	kg/m^3
Dynamic viscosity	mu	Pa·s
Heat capacity at constant pressure	Cp	J/(kg·K)
Thermal conductivity	k	W/(m·K)
VISCOUS MODEL		
Bulk viscosity	muB	Pa·s

Electrochemistry Material Properties

These material property groups for electrochemistry (including their associated physical properties) can be added to models from the **Material** window. These property groups are used by the Batteries & Fuel Cells Module, Corrosion Module, Electrochemistry Module, and Electrodeposition Module.

TABLE 9-4: ELECTROCHEMISTRY MATERIALS

PROPERTY GROUP AND PROPERTY	NAME/VARIABLE	SI UNIT
EQUILIBRIUM POTENTIAL		
Equilibrium potential	Eeq	V
Reference concentration	cEeqref	mol/m^3
Temperature derivative of equilibrium potential	dEeqdT	V/K
ELECTROLYTE CONDUCTIVITY		
Electrolyte conductivity	sigmal	S/m
ELECTROLYTE SALT CONCENTRATION		
Electrolyte salt concentration	cElsalt	mol/m^3
LINEARIZED RESISTIVITY	This material node defines the electric resistivity (and conductivity) as a linear function of temperature.	
Reference resistivity	rho0	Ω·m
Reference temperature	Tref	K
Resistivity temperature coefficient	alpha	1/K
OPERATIONAL ELECTRODE STATE-OF-CHARGE		
Maximum electrode state-of-charge	socmax	1
Minimum electrode state-of-charge	socmin	1
SPECIES PROPERTIES		
Transport number	transNum	1

Electromagnetic Models

These material property groups for various electromagnetic material models (including their associated physical properties) can be added to models from the **Material** window. These property groups are used by the AC/DC Module, RF Module, and Wave Optics Module.

TABLE 9-5: ELECTROMAGNETIC MODELS MATERIALS

PROPERTY GROUP AND PROPERTY	NAME/VARIABLE	SI UNIT
B-H CURVE	This material node is only available with the AC/DC Module.	
Local Properties	normH	-
Magnetic flux density norm	normB	T
DIELECTRIC LOSSES		
Dielectric loss factor	eta_epsilon	-
Relative permittivity (imaginary part)	epsilonBis	1
Relative permittivity (real part)	epsilonPrim	1
E-J CHARACTERISTIC	This material node is only available with the AC/DC Module.	
Electric field norm	normE	V/M
Local Properties	normJ	-
EFFECTIVE B-H CURVE	This material node is only available with the AC/DC Module.	
Local Properties	normHeff	-
Magnetic flux density norm	normBeff	T
EFFECTIVE H-B CURVE	This material node is only available with the AC/DC Module.	
Local Properties	normBeff	-
Magnetic field norm	normHeff	A/m
H-B CURVE	This material node is only available with the AC/DC Module.	
Local Properties	normB	-
Magnetic field norm	normH	A/m
JILES-ATHERTON MODEL PARAMETERS	This material node is only available with the AC/DC Module.	
Maximum magnetization parameter	MsJA (3x3 matrix)	A/m
Langevin slope parameter	aJA (3x3 matrix)	A/m
Pinning parameter	kJA (3x3 matrix)	A/m
Reversibility parameter	cJA (3x3 matrix)	1
Interdomain coupling parameter	alphaJA (3x3 matrix)	1
LINEARIZED RESISTIVITY	This material node defines the electric resistivity (and conductivity) as a linear function of temperature.	
Reference resistivity	rho0	Ω·m
Reference temperature	Tref	K
Resistivity temperature coefficient	alpha	1/K
LOSS TANGENT, LOSS ANGLE	This material node assumes zero conductivity.	

TABLE 9-5: ELECTROMAGNETIC MODELS MATERIALS

PROPERTY GROUP AND PROPERTY	NAME/VARIABLE	SI UNIT
Loss tangent, loss angle	delta	rad
Relative permittivity (real part)	epsilonPrim	1
LOSS TANGENT, DISSIPATION FACTOR	This material node assumes zero conductivity.	
Loss tangent, dissipation factor	tanDelta	1
Relative permittivity (real part)	epsilonPrim	1
MAGNETIC LOSSES		
Relative permeability (imaginary part)	murBis	-
Relative permeability (real part)	murPrim	-
REFRACTIVE INDEX	This material node assumes a relative permeability of unity and zero conductivity. This material node is only available with the RF Module or the Wave Optics Module.	
Refractive index, imaginary part	ki	-
Refractive index	n	1
REMANENT FLUX DENSITY	This material node is only available with the AC/DC Module.	
Recoil permeability	murec	1
Remanent flux density norm	normBr	T

Equilibrium Discharge

These material property groups for all the material models in the Equilibrium Discharge (including their associated physical properties) can be added to models from the **Material** window. These property groups are used by the Plasma Module.

TABLE 9-6: EQUILIBRIUM DISCHARGE MATERIALS

PROPERTY GROUP AND PROPERTY	NAME/VARIABLE	SI UNIT
RADIATION HEAT TRANSFER		
Total volumetric emission coefficient	Qrad	W/m^3

Gas Models

This material property group for an ideal gas (including its associated physical properties) can be added to models from the **Material** page.

TABLE 9-7: GAS MODELS MATERIALS

PROPERTY GROUP AND PROPERTY	NAME/VARIABLE	SI UNIT
IDEAL GAS		
Heat capacity at constant pressure	Cp	J/(kg·K)
Mean molar mass	Mn	kg/mol
Ratio of specific heats	gamma	1
Specific gas constant	Rs	J/(kg·K)

Geometric Properties (Shell)

The **Shell** material property group is used in connection with layered materials (it is, for example, added when you add a **Material** node by choosing **Single Layer Material** from the **Layers** submenu on the **Materials** node's context menu. This property group contains geometric properties for the definition of a layer in the **Layer Definition** section.

TABLE 9-8: SHELL PROPERTIES

PROPERTY GROUP AND PROPERTY	NAME/VARIABLE	SI UNIT
SHELL		
Thickness	lth	m
Rotation	lrot	rad/mol
Mesh elements	lne	1

Magnetostrictive Models

These material property groups for various magnetostrictive material models (including their associated physical properties) can be added to models from the **Material** window. These property groups are used by the AC/DC Module.

TABLE 9-9: MAGNETOSTRICTIVE MODELS MATERIALS

PROPERTY GROUP AND PROPERTY	NAME/VARIABLE	SI UNIT
MAGNETOSTRICTIVE		
Saturation magnetization	Ms	A/m
Initial magnetic susceptibility	chi	1
Saturation magnetostriction	lambdas	1
Magnetostriction constants	lambda100	1
Magnetostriction constants	lambda111	1
STRAIN-MAGNETIZATION FORM	This material node is only available with the AC/DC Module.	
Compliance matrix	sH (6x6 matrix)	1/Pa
Loss factor for compliance matrix sH	eta_sH (6x6 matrix)	1
Piezomagnetic coupling matrix	dHT (3x6 matrix)	m/A
Relative permeability	murT (3x3 matrix)	1
STRESS-MAGNETIZATION FORM	This material node is only available with the AC/DC Module.	
Elasticity matrix	cH (6x6 matrix)	Pa
Loss factor for elasticity matrix cH	eta_cH (6x6 matrix)	1
Piezomagnetic coupling matrix	eHS (3x6 matrix)	T
Relative permeability	murS (3x3 matrix)	1

Piezoelectric Models

These material property groups for piezoelectric materials (including their associated physical properties) can be added to models from the **Material** window. These property groups are used by the Acoustics Module, MEMS Module, or Structural Mechanics Module.

TABLE 9-10: PIEZOELECTRIC MATERIALS

PROPERTY GROUP AND PROPERTY	NAME/VARIABLE	SI UNIT
STRAIN-CHARGE FORM		
Compliance matrix	sE	1/Pa
Coupling matrix	dET	C/N
Loss factor for compliance matrix	sE	1
Loss factor for coupling matrix	d	1
Loss factor for electrical permittivity	εT	1
Relative permittivity	epsilonrT	1
STRESS-CHARGE FORM		
Coupling matrix	eES	C/m^2
Elasticity matrix	cE	Pa
Loss factor for elasticity matrix	cE	1
Loss factor for coupling matrix	e	1
Loss factor for electrical permittivity	εS	1
Relative permittivity	epsilonrS	1

Piezoresistive Models

These material property groups for piezoresistive materials (including their associated physical properties) can be added to models from the **Material** window. These property groups are used by the MEMS Module.

TABLE 9-11: GAS MODELS MATERIALS

PROPERTY GROUP AND PROPERTY	NAME/VARIABLE	SI UNIT
ELASTORESISTANCE FORM		
Elastoresistive coupling matrix	ml	Ω·m
PIEZORESISTANCE FORM		
Piezoresistive coupling matrix	Pil	A/m^2

Semiconductors Material Properties

These material property groups for all the material models in semiconductors (including their associated physical properties) can be added to models from the **Material** window. These property groups are used by the Semiconductor Module.

	The Property Group, Variable Names, and SI Unit columns are applicable to all materials in the Semiconductor Module. However, the Values and References columns listed in Table 9-12 are specifically for silicon.

TABLE 9-12: SEMICONDUCTOR MATERIAL PROPERTIES (ALL MATERIALS) AND VALUES AND REFERENCES FOR SILICON

PROPERTY GROUP AND PROPERTY (ALL MATERIALS)	NAME/VARIABLE (ALL MATERIALS)	SI UNIT	VALUE FOR SILICON	REFERENCE FOR SILICON
BASIC				
Relative permittivity	epsilonr	1	11.7	Ref. 1
Thermal conductivity	k	W/(m·K)	131 W/(m·K)	Ref. 1
Density	rho	kg/m^3	2329 kg/m^3	Ref. 1
Heat capacity at constant pressure	Cp	J/(kg·K)	700 J/(kg·K)	Ref. 1
BAND-GAP NARROWING MODELS>JAIN-ROULSTON MODEL				
Jain-Roulston coefficient (n-type), A	An_jr	V	$3.5\cdot10^{-8}$ V	Ref. 12
Jain-Roulston coefficient (n-type), B	Bn_jr	V	0 V	Ref. 12
Jain-Roulston coefficient (n-type), C	Cn_jr	V	0 V	Ref. 12
Jain-Roulston coefficient (p-type), A	Ap_jr	V	$3.5\cdot10^{-8}$ V	Ref. 12
Jain-Roulston coefficient (p-type), B	Bp_jr	V	0 V	Ref. 12
Jain-Roulston coefficient (p-type), C	Cp_jr	V	0 V	Ref. 12
Band-gap narrowing reference concentration	Nref_jr	$1/m^3$	1 $1/cm^3$	Ref. 12
Conduction band fraction	alpha_jr	1	0.5	Ref. 12
BAND-GAP NARROWING MODELS>SLOTBOOM MODEL				
Band-gap narrowing reference energy	Eref_sb	V	0.00692 V	Ref. 11
Band-gap narrowing reference concentration	Nref_sb	$1/m^3$	$1.3\cdot10^{17}$ $1/cm^3$	Ref. 11
Conduction band fraction	alpha_sb	1	0.5	Ref. 11
GENERATION-RECOMBINATION>AUGER RECOMBINATION				
Auger recombination factor, electrons	Cn	m^6/s	$2.8\cdot10^{-31}$ cm^6/s (valid at 300 K)	Ref. 2
Auger recombination factor, holes	Cp	m^6/s	$9.9\cdot10^{-32}$ cm^6/s (valid at 300 K)	Ref. 2

TABLE 9-12: SEMICONDUCTOR MATERIAL PROPERTIES (ALL MATERIALS) AND VALUES AND REFERENCES FOR SILICON

PROPERTY GROUP AND PROPERTY (ALL MATERIALS)	NAME/VARIABLE (ALL MATERIALS)	SI UNIT	VALUE FOR SILICON	REFERENCE FOR SILICON
GENERATION-RECOMBINATION>DIRECT RECOMBINATION				
Direct recombination factor	C	m^3/s	0 m^3/s	N/A
GENERATION-RECOMBINATION>IMPACT IONIZATION				
a factor, electrons, impact ionization	an	1/V	0.426 1/V	Ref. 3
a factor, holes, impact ionization	ap	1/V	0.243 1/V	Ref. 3
b factor, electrons, impact ionization	bn	V/m	$4.81\cdot10^5$ V/cm	Ref. 3
b factor, holes, impact ionization	bp	V/m	$6.53\cdot10^5$ V/cm	Ref. 3
c factor, electrons, impact ionization	cn	1/KValues	$3.05\cdot10^{-4}$ 1/K	Ref. 3
c factor, holes, impact ionization	cp	1/K	$5.35\cdot10^{-4}$ 1/K	Ref. 3
d factor, electrons, impact ionization	dn	1/K	$6.86\cdot10^{-4}$ 1/K	Ref. 3
d factor, holes, impact ionization	dp	1/K	$5.67\cdot10^{-4}$ 1/K	Ref. 3
GENERATION-RECOMBINATION>SHOCKLEY-READ-HALL RECOMBINATION				
Electron lifetime, SRH	taun	s	10 µs	Ref. 4
Hole lifetime, SRH	taup	s	10 µs	Ref. 4
MOBILITY MODELS>ARORA MOBILITY MODEL				
Electron mobility reference	mun0_ref_arora	$m^2/(V\cdot s)$	1252 $cm^2/(V\cdot s)$	Ref. 5
Hole mobility reference	mup0_ref_arora	$m^2/(V\cdot s)$	407 $cm^2/(V\cdot s)$	Ref. 5
Electron mobility reference minimum	mun_min_ref_arora	$m^2/(V\cdot s)$	88 $cm^2/(V\cdot s)$	Ref. 5
Hole mobility reference minimum	mup_min_ref_arora	$m^2/(V\cdot s)$	53.4 $cm^2/(V\cdot s)$	Ref. 5
Electron reference impurity concentration	Nn0_ref_arora	$1/m^3$	$1.26\cdot10^{17}$ $1/cm^3$	Ref. 5
Hole reference impurity concentration	Np0_ref_arora	$1/m^3$	$2.35\cdot10^{17}$ $1/cm^3$	Ref. 5
Alpha coefficient	alpha0_arora	1	0.88	Ref. 5
Mobility reference minimum exponent	beta1_arora	1	-0.57	Ref. 5
Mobility reference exponent	beta2_arora	1	-2.33	Ref. 5
Impurity concentration reference exponent	beta3_arora	1	2.4	Ref. 5

TABLE 9-12: SEMICONDUCTOR MATERIAL PROPERTIES (ALL MATERIALS) AND VALUES AND REFERENCES FOR SILICON

PROPERTY GROUP AND PROPERTY (ALL MATERIALS)	NAME/VARIABLE (ALL MATERIALS)	SI UNIT	VALUE FOR SILICON	REFERENCE FOR SILICON
Alpha coefficient exponent	beta4_arora	$m^2/(V\cdot s)$	-0.146	Ref. 5
Reference temperature	Tref_arora	K	300 K	Ref. 5
MOBILITY MODELS>CAUGHEY-THOMAS MOBILITY MODEL				
Electron alpha coefficient	alphan0_ct	1	1.11	Ref. 6
Electron alpha exponent	betan1_ct	1	0.66	Ref. 6
Electron saturation velocity	vn0_ct	m/s	$1\cdot10^7$ cm/s	Ref. 6
Electron velocity saturation exponent	betan2_ct	1	-0.87	Ref. 6
Hole alpha coefficient	alphap0_ct	1	1.21	Ref. 6
Hole alpha exponent	betap1_ct		0.17	Ref. 6
Hole saturation velocity	vp0_ct	m/s	$8.37\cdot10^6$ cm/s	Ref. 6
Hole velocity saturation exponent	betap2_ct	1	-0.52	Ref. 6
Reference temperature	Tref_ct	K	300 K	Ref. 6
MOBILITY MODELS>FLETCHER MOBILITY MODEL				
Fletcher mobility coefficient 1	F1_fl	$1/(cm\cdot V\cdot s)$	1.04×10^{21} $1/(cm\cdot V\cdot s)$	Ref. 7
Fletcher mobility coefficient 2	F2_fl	$1/m^2$	7.45×10^{13} $1/cm^2$	Ref. 7
Reference temperature	Tref_fl	K	300 K	Ref. 7
MOBILITY MODELS>LOMBARDI SURFACE MOBILITY MODEL				
Electron delta coefficient	deltan_ls	V/s	5.82×10^{14} V/s	Ref. 8
Electron mobility reference	mun1_ls	$m^2/(V\cdot s)$	$4.75 \times 10^7 cm^2/(V\cdot s)$	Ref. 8
Electron mobility reference	mun2_ls	$m^2/(V\cdot s)$	1.74×10^5 $cm^2/(V\cdot s)$	Ref. 8
Electron alpha coefficient	alphan_ls	1	0.125	Ref. 8
Hole delta coefficient	deltap_ls	V/s	2.05×10^{14} V/s	Ref. 8
Hole mobility reference	mup1_ls	$m^2/(V\cdot s)$	9.93×10^7 $cm^2/(V\cdot s)$	Ref. 8
Hole mobility reference	mup2_ls	$m^2/(V\cdot s)$	8.84×10^5 $cm^2/(V\cdot s)$	Ref. 8
Hole alpha coefficient	alphap_ls	1	0.0317	Ref. 8

TABLE 9-12: SEMICONDUCTOR MATERIAL PROPERTIES (ALL MATERIALS) AND VALUES AND REFERENCES FOR SILICON

PROPERTY GROUP AND PROPERTY (ALL MATERIALS)	NAME/VARIABLE (ALL MATERIALS)	SI UNIT	VALUE FOR SILICON	REFERENCE FOR SILICON
Reference temperature	Tref_ls	K	1 K	Ref. 8
Electric field reference	Eref_ls	V/m	1 V/cm	Ref. 8
Doping concentration reference	Nref_ls	$1/m^3$	1 $1/cm^3$	Ref. 8
MOBILITY MODELS>POWER LAW MOBILITY MODEL				
Electron mobility reference	mun0_pl	$m^2/(V\cdot s)$	1448 $cm^2/(V\cdot s)$	Ref. 5
Hole mobility reference	mup0_pl	$m^2/(V\cdot s)$	473 $cm^2/(V\cdot s)$	Ref. 5
Electron exponent	alphan_pl	1	2.33	Ref. 5
Hole exponent	alphap_pl	1	2.23	Ref. 5
Reference temperature	Tref_pl	K	300 K	Ref. 5
SEMICONDUCTOR MATERIAL				
Band gap	Eg0	V	1.12 V (valid at 300 K)	Ref. 1
Effective density of states, conduction band	Nc	$1/m^3$	2.8×10^{19} $1/cm^3$ $\times(T/300\ K)^{3/2}$	Ref. 1
Effective density of states, valence band	Nv	$1/m^3$	1.04×10^{19} $1/cm^3$ $\times(T/300\ K)^{3/2}$	Ref. 1
Electron affinity	chi0	V	4.05 V	Ref. 1
Electron mobility	mun	$m^2/(V\cdot s)$	1450 $cm^2/(V\cdot s)$	Ref. 1
Hole mobility	mup	$m^2/(V\cdot s)$	500 $cm^2/(V\cdot s)$	Ref. 1

Solid Mechanics Material Properties

These material property groups for material models in solid mechanics (including their associated physical properties) can be added to models from the **Material** window. Most of these properties are used by the Structural Mechanics Module. The property groups of the external material are of a special type that depends on the selected interface type and are not individually documented.

TABLE 9-13: SOLID MECHANICS MATERIALS

PROPERTY GROUP AND PROPERTY	NAME/VARIABLE	SI UNIT
LINEAR ELASTIC MATERIAL		
ANISOTROPIC		
Elasticity matrix	D	Pa
Loss factor for elasticity matrix D	eta_D	1
ANISOTROPIC, VOIGT NOTATION		
Elasticity matrix, Voigt notation	DV0	Pa
Loss factor for elasticity matrix D, Voigt notation	eta_DVo	1

TABLE 9-13: SOLID MECHANICS MATERIALS

PROPERTY GROUP AND PROPERTY	NAME/VARIABLE	SI UNIT
BULK MODULUS AND SHEAR MODULUS		
Bulk modulus	K	N/m^2
Shear modulus	G	N/m^2
LAMÉ PARAMETERS		
Lamé parameter λ	lambLame	N/m^2
Lamé parameter μ	muLame	N/m^2
ORTHOTROPIC		
Young's modulus	Evector	Pa
Poisson's ratio	nuvector	1
Shear modulus	Gvector	N/m^2
Loss factor for orthotropic Young's modulus	eta_Evector	1
Loss factor for orthotropic shear modulus	eta_Gvector	1
ORTHOTROPIC, VOIGT NOTATION		
Shear modulus, Voigt notation	GvectorVo	N/m^2
Loss factor for orthotropic shear modulus, Voigt notation	eta_GvectorVo	1
PRESSURE-WAVE AND SHEAR-WAVE SPEEDS		
Pressure-wave speed	cp	m/s
Shear-wave speed	cs	m/s
YOUNG'S MODULUS AND POISSON'S RATIO		
Young's modulus	E	Pa
Poisson's ratio	nu	1
YOUNG'S MODULUS AND SHEAR MODULUS		
Young's modulus	E	Pa
Shear modulus	G	N/m^2
LINEAR VISCOELASTIC MATERIAL		
Long-term shear modulus	Gv	N/m^2
Bulk modulus	K	N/m^2
POROELASTIC MATERIAL		
Biot-Willis coefficient	alphaB	1
Porosity	epsilon	1
Permeability	kappa	m^2
SAFETY		
ISOTROPIC STRENGTH PARAMETERS		
Tensile strength	sigmat	Pa
Compressive strength	sigmac	Pa
Biaxial compressive strength	sigmabc	Pa
ISOTROPIC ULTIMATE STRAINS		
Ultimate tensile strain	epsilont	1
Ultimate compressive strain	epsilonc	1
ORTHOTROPIC STRENGTH PARAMETERS, VOIGT NOTATION		
Tensile strengths	sigmats	Pa
Compressive strengths	sigmacs	Pa
Shear strengths	sigmass	Pa
ORTHOTROPIC ULTIMATE STRAINS, VOIGT NOTATION		

TABLE 9-13: SOLID MECHANICS MATERIALS

PROPERTY GROUP AND PROPERTY	NAME/VARIABLE	SI UNIT
Ultimate tensile strains	epsilonts	1
Ultimate compressive strains	epsiloncs	1
Ultimate shear strains	gammass	1
ANISOTROPIC STRENGTH PARAMETERS, VOIGT NOTATION		
Second rank tensor, Voigt notation	F_s	1/Pa
Fourth rank tensor, Voigt notation	F_f	$m^2 \cdot s^4/kg^2$

- The *Structural Mechanics Module User's Guide* and Table 9-16
- The *Structural Mechanics Module User's Guide* and Table 9-14
- The *Fatigue Module User's Guide* and Table 9-15

Solid Mechanics Material Properties: Nonlinear Structural Materials Module

These material property groups for material models in solid mechanics using the Nonlinear Structural Materials Module (including their associated physical properties) can be added to models from the **Material** window.

TABLE 9-14: HYPERELASTIC AND ELASTOPLASTIC MATERIAL PROPERTIES

PROPERTY GROUP AND PROPERTY	NAME/VARIABLE	SI UNIT
ELASTOPLASTIC MATERIAL		
Hardening function	sigmagh	Pa
Hill's coefficients	Hillcoefficients	$(m^2 \cdot s^4)/kg^2$
Initial tensile and shear yield stresses	ys	N/m^2
Initial yield stress	sigmags	Pa
Isotropic tangent modulus	Et	Pa
Kinematic tangent modulus	Ek	Pa
ARMSTRONG-FREDERICK		
Kinematic hardening modulus	Ck	Pa
Kinematic hardening parameter	gammak	1
CHABOCHE		
Kinematic hardening modulus	Ck0_cha	Pa
LUDWIK		
Strength coefficient	k_lud	Pa
Hardening exponent	n_lud	1
SWIFT		
Reference strain	e0_swi	1
Hardening exponent	n_swi	1
VOCE		
Saturation flow stress	sigma_voc	Pa
Saturation exponent	beta_voc	1
HOCKETT-SHERBY		
Steady-state flow stress	sigma_hoc	Pa
Saturation coefficient	m_hoc	1
Saturation exponent	n_hoc	1
CREEP		

TABLE 9-14: HYPERELASTIC AND ELASTOPLASTIC MATERIAL PROPERTIES

PROPERTY GROUP AND PROPERTY	NAME/VARIABLE	SI UNIT
NORTON		
Creep rate coefficient	A_nor	1/s
Reference stress	sigRef_nor	Pa
Stress exponent	n_nor	1
GAROFALO (HYPERBOLIC SINE)		
Creep rate coefficient	A_gar	1/s
Reference stress	sigRef_gar	Pa
Stress exponent	n_gar	1
NABARRO-HERRING		
Volume diffusivity	D_nav	m^2/s
Burgers vector	b_nav	m
Grain diameter	dg_nav	m
COBLE		
Ionic diffusivity	D_cob	m^2/s
Burgers vector	b_cob	m
Grain diameter	dg_cob	m
WEERTMAN		
Diffusivity	D_wee	m^2/s
Burgers vector	b_wee	m
Stress exponent	n_wee	1
Reference stress	sigRef_wee	Pa
VISCOPLASTIC MATERIAL		
ANAND		
Viscoplastic rate coefficient	A_ana	1/s
Activation energy	Q_ana	J/mol
Multiplier of stress	xi_ana	1
Stress sensitivity	m_ana	1
Deformation resistance saturation coefficient	s0_ana	Pa
Deformation resistance initial value	sa_init	Pa
Hardening constant	h0_ana	Pa
Hardening sensitivity	a_ana	1
Deformation resistance sensitivity	n_ana	1
CHABOCHE		
Viscoplastic rate coefficient	A_cha	1/s
Reference stress	sigRef_cha	Pa
Stress exponent	n_cha	1
PREZYNA		
Viscoplastic rate coefficient	A_per	1/s
Reference stress	sigRef_per	Pa
POROPLASTIC MATERIAL		
Initial yield stress	sigmags	Pa
Shima-Oyane alpha parameter	alphaShima	1
Shima-Oyane gamma parameter	gammaShima	1

TABLE 9-14: HYPERELASTIC AND ELASTOPLASTIC MATERIAL PROPERTIES

PROPERTY GROUP AND PROPERTY	NAME/VARIABLE	SI UNIT
Shima-Oyane m parameter	mShima	1
Initial void volume fraction	f0	1
Critical void volume fraction	fc	1
Failure void volume fraction	ff	1
Tvergaard correction coefficient q1	q1GTN	1
Tvergaard correction coefficient q2	q2GTN	1
Tvergaard correction coefficient q3	q3GTN	1
Maximum void volume fraction	fmax	1
NONLINEAR ELASTIC MATERIAL		
Reference stress	sigRef	Pa
Reference strain	eRef	1
Stress exponent	n_stress	1
Reference shear strain	gammaRef	1
Strain exponent	n_strain	1
Bulk modulus in tension	Kt	Pa
Bulk modulus in compression	Kc	Pa
Ultimate deviatoric stress	q_ult	Pa
Ultimate strain	e_ult	1
ELASTOPLASTIC SOIL MATERIAL		
CAM-CLAY		
Swelling index	kappaSwelling	1
Compression index	lambdaComp	1
Void ratio at reference pressure	evoidref	1
Slope of critical state line	M	1
STRUCTURED CAM-CLAY		
Swelling index for structured clay	kappaSwellingS	1
Compression index for destructured clay	lambdaCompS	1
Void ratio at reference pressure for destructured clay	evoidrefS	1
Destructuring index for volumetric deformation	dvS	1
Destructuring index for shear deformation	dsS	1
Slope of critical state line	M	1
Additional void ratio at initial yielding	Deltaei	1
Initial structure strength	pbi	Pa
Plastic potential shape parameter	zetaS	1
Critical effective deviatoric plastic strain	epdevc	1
BARCELONA BASIC		
Swelling index	kappaSwelling	1
Swelling index for changes in suction	kappaSwellings	1
Compression index at saturation	lambdaComp0	1
Weight parameter	wB	1
Soil stiffness parameter	mB	Pa

TABLE 9-14: HYPERELASTIC AND ELASTOPLASTIC MATERIAL PROPERTIES

PROPERTY GROUP AND PROPERTY	NAME/VARIABLE	SI UNIT
Plastic potential smoothing parameter	bB	1
Tension to suction ratio	kB	1
Void ratio at reference pressure and saturation	evoidref0	1
Initial yield value for suction	sy0	Pa
HARDENING SOIL		
Reference stiffness for primary loading	E50Ref	Pa
Reference stiffness for unloading and reloading	EurRef	Pa
Stress exponent	mH	1
Bulk modulus in compression	Kc	Pa
Void ratio at reference pressure	evoidref	1
HYPERELASTIC MATERIALS		
ARRUDA-BOYCE		
Macroscopic shear modulus	mu0	N/m^2
Number of segments	Nseg	1
BLATZ-KO		
Model parameters	phiBK	1
Model parameters	betaBK	1
Shear modulus	muBK	Pa
GAO		
Model parameters	aG	Pa
Model parameters	nG	1
GENT		
Macroscopic shear modulus	muG	Pa
Model parameters	jmG	1
MOONEY-RIVLIN		
Model parameters	C01, C02, C03, C10, C11, C12, C20, C21, C30	Pa
MURNAGHAN	The Murnaghan node adds five model parameters. The model is based on strain invariants and is typically used in acoustoelasticity.	
Murnaghan third-order elastic moduli	l	Pa
Murnaghan third-order elastic moduli	m	Pa
Murnaghan third-order elastic moduli	n	Pa
Lamé parameter λ	lambLame	Pa
Lamé parameter μ	muLame	Pa
VARGA		
Model parameters	c1VA	Pa
Model parameters	c2VA	Pa
YEOH		
Model parameters	c1YE	Pa

TABLE 9-14: HYPERELASTIC AND ELASTOPLASTIC MATERIAL PROPERTIES

PROPERTY GROUP AND PROPERTY	NAME/VARIABLE	SI UNIT
Model parameters	c2YE	Pa
Model parameters	c3YE	Pa

Solid Mechanics Material Properties: Fatigue Module

These material property groups for material models in solid mechanics using the Fatigue Module (including their associated physical properties) can be added to models from the **Material** window.

TABLE 9-15: ELASTOPLASTIC AND FATIGUE BEHAVIOR MATERIAL PROPERTIES

PROPERTY GROUP AND PROPERTY	NAME/VARIABLE	SI UNIT
ELASTOPLASTIC MATERIAL>RAMBERG-OSGOOD		
Cyclic hardening coefficient	K_ROcyclic	Pa
Cyclic hardening coefficient	n_ROcyclic	1
FATIGUE BEHAVIOR>ENERGY-BASED		
DARVEAUX		
Crack initiation energy coefficient	K1_Darveaux	1
Crack initiation energy exponent	k2_Darveaux	1
Crack propagation energy coefficient	K3_Darveaux	m
Crack propagation energy exponent	k4_Darveaux	1
Reference energy density	Wref_Darveaux	J/m^3
MORROW		
Fatigue energy coefficient	Wf_Morrow	J/m^3
Fatigue energy exponent	m_Morrow	1
FATIGUE BEHAVIOR>FATIGUE BEHAVIOR>APPROXIMATE S-N CURVE		
Transition stress	sigmat	Pa
Transition life	Nt	1
Endurance life	Ne	1
FATIGUE BEHAVIOR>GENERAL		
Endurance limit	sigmae	Pa
FATIGUE BEHAVIOR>STRAIN-BASED		
COFFIN-MANSON		
Fatigue ductility coefficient	epsilonf_CM	1
Fatigue ductility exponent	c_CM	1
Shear fatigue ductility coefficient	gammaf_CM	1
Shear fatigue ductility exponent	cgamma_CM	1
FATEMI-SOCIE		
Normal stress sensitivity coefficient	k_FS	1
WANG-BROWN		
Normal stress sensitivity coefficient	S_WB	1
FATIGUE BEHAVIOR>STRESS-BASED		
BASQUIN		
Fatigue strength coefficient	sigmaf_Basquin	Pa

TABLE 9-15: ELASTOPLASTIC AND FATIGUE BEHAVIOR MATERIAL PROPERTIES

PROPERTY GROUP AND PROPERTY	NAME/VARIABLE	SI UNIT
Fatigue strength exponent	b_Basquin	1
Shear fatigue strength coefficient	tauf_Basquin	Pa
Shear fatigue strength exponent	bgamma_Basquin	1
FINDLEY		
Normal stress sensitivity coefficient	k_Findley	1
Limit factor	f_Findley	Pa
MATAKE		
Normal stress sensitivity coefficient	k_Matake	1
Limit factor	f_Matake	Pa
NORMAL STRESS		
Limit factor	f_NormalStress	Pa
DANG VAN		
Hydrostatic stress sensitivity coefficient	a_DangVan	1
Limit factor	b_DangVan	Pa

Solid Mechanics Material Properties: Geomechanics Material Model

These material property groups for material models in solid mechanics (including their associated physical properties) can be added to models from the **Material** window. These property groups are used by the Geomechanics Module.

TABLE 9-16: GEOMECHANICS MODELS MATERIALS

PROPERTY GROUP AND PROPERTY	NAME/VARIABLE	SI UNIT
DRUCKER-PRAGER		
Drucker-Prager alpha coefficient	alphaDrucker	1
Drucker-Prager k coefficient	kDrucker	Pa
HOEK BROWN		
Hoek-Brown m parameter	mHB	1
Hoek-Brown s parameter	sHB	1
Geological strength index	GSI	1
Disturbance factor	Dfactor	1
Intact rock parameter	miHB	1
LADE-DUNCAN		
Lade-Duncan k coefficient	kLade	1
MATSUOKA-NAKAI		
Matsuoka-Nakai mu coefficient	muMatsuoka	1
MOHR-COULOMB		
Cohesion	cohesion	Pa
Angle of internal friction	internalphi	rad
OTTOSEN		
Ottosen a parameter	aOttosen	1
Ottosen b parameter	bOttosen	1
Size factor	k1Ottosen	1

TABLE 9-16: GEOMECHANICS MODELS MATERIALS

PROPERTY GROUP AND PROPERTY	NAME/VARIABLE	SI UNIT
Shape factor	k2Ottosen	1
YIELD STRESS PARAMETERS		
Uniaxial tensile strength	sigmaut	Pa
Uniaxial compressive strength	sigmauc	Pa
Biaxial compressive strength	sigmabc	Pa

Thermal Expansion Material Properties

This material property group for thermal expansion properties can be added to models from the **Material** page.

TABLE 9-17: THERMAL EXPANSION MATERIAL PROPERTIES

PROPERTY GROUP AND PROPERTY	NAME/VARIABLE	SI UNIT
IDEAL GAS		
Isotropic tangent coefficient of thermal expansion	alphatanIso	1/K
Isotropic thermal strain	dLIso	1
Tangent coefficient of thermal expansion	alphatan_iso; alphatanij	1/K
Thermal strain	dLi_iso, dLij	1

External Material Properties

The property groups of the external materials are of a special type that depends on the selected interface type and are not individually documented. You can incorporate as many parameters in the call to the external DLL when you add an external material, these parameters will appear in the Material node as material inputs, see Working with External Materials for more information.

User-Defined Materials and Libraries

User-defined materials provide the flexibility needed to design your models and experiments using a combination of existing material properties and properties you define yourself. You can also create your own material database (library) to include materials you use often.

	You can also modify and extend existing materials that you load from any of the material libraries. When added to the Component node, the material is a copy of the properties and the material from the library, and you can modify that material's properties in the same way as a user-defined material.

	Materials Toolbar

Importing a Material Library

Material libraries are stored as COMSOL Multiphysics model files (`.mph` file) or as XML files. Any COMSOL model containing materials can be imported as a material library, and conversely a material library stored in the COMSOL Multiphysics model format can be opened and modified in the same way as any other COMSOL Multiphysics model file. The XML format, in contrast, is a simplified text format that can be modified in a text editor or written by some external source of material data.

1 In the **Materials** toolbar, click **Browse Material** .

2 In the **Material Browser** window's toolbar, click the **Import Material Library** ( ) button. The **Choose Material Library** dialog box opens.

3 Navigate to a material library file on your computer. To the right of **File name**, choose **XML File (.xml)**, to find material libraries stored as XML files.

4 When you have located the file to import, click **Open**.

	An example of an external material library is MatWeb. MatWeb provides a service where you can export technical datasheets from MatWeb's collection in the format for a COMSOL material library. For more information about this service, visit www.matweb.com.

Creating a New Material Library and Adding and Editing Materials

When you first open the **Material Browser**, an empty **User-Defined Library** is available for you to start creating your own library of materials (see Figure 9-1). These steps describe how to create a copy of the existing library, rename it, and then add materials to the empty library.

CREATING A USER-DEFINED MATERIAL LIBRARY

1 In the **Materials** toolbar, click **Browse Material** .

2 Create the empty material library. There are different ways to do this in the **Material Browser** window:

- Click the **New Material Library** button ( ) under the tree.
- Navigate to the material you want to add — copper, for example. Right-click and select **Add to New Library.**

3 In the **New Material Library** dialog box, navigate to the folder on the computer where the empty **User-Defined Library** database is located. The location of the file varies based on your installation. For example, if the installation is on your hard drive:

- The file path on Windows might be similar to `C:\Users\`*`Your_Name`*`\.comsol\v55\materials`.
- On Linux, the file path is typically `~/.comsol/v55/material`.
- On macOS, it is typically `<`*`home folder`*`>/Library/Preferences/COMSOL/v55/material` (if missing, click the Finder's **Go** menu and hold down the Option key to show the `Library` folder). You can also search for the filename `User_Defined_Library.mph`.

4 Right-click the `User_Defined_Library.mph` and select **Copy**. Right-click in the window and select **Paste**.

5 Click the copied filename to rename it. The new name must include underscores (_) between words (for example, `My_Metals.mph`.)

6 Click the new material library filename and then click **Save**. The empty database, with a new name, is added to the **Material Browser**.

7 Click **Done** .

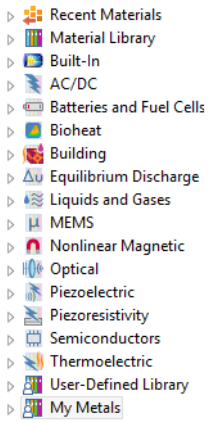

ADDING A PREDEFINED MATERIAL TO THE USER-DEFINED MATERIAL LIBRARY

Add any predefined material to a **Component** node in the **Model Builder**. There are different ways to add the material to the Model Builder as well as to the Material Library.

Using the Material Browser

1 To open the **Material Browser**, right-click the **Materials** node and select **Browse Material** , or in the **Materials** toolbar, click **Browse Material** .

2 Right-click the material to add, **Copper** for example, and select **Add to My Metals** (or any other material library available).

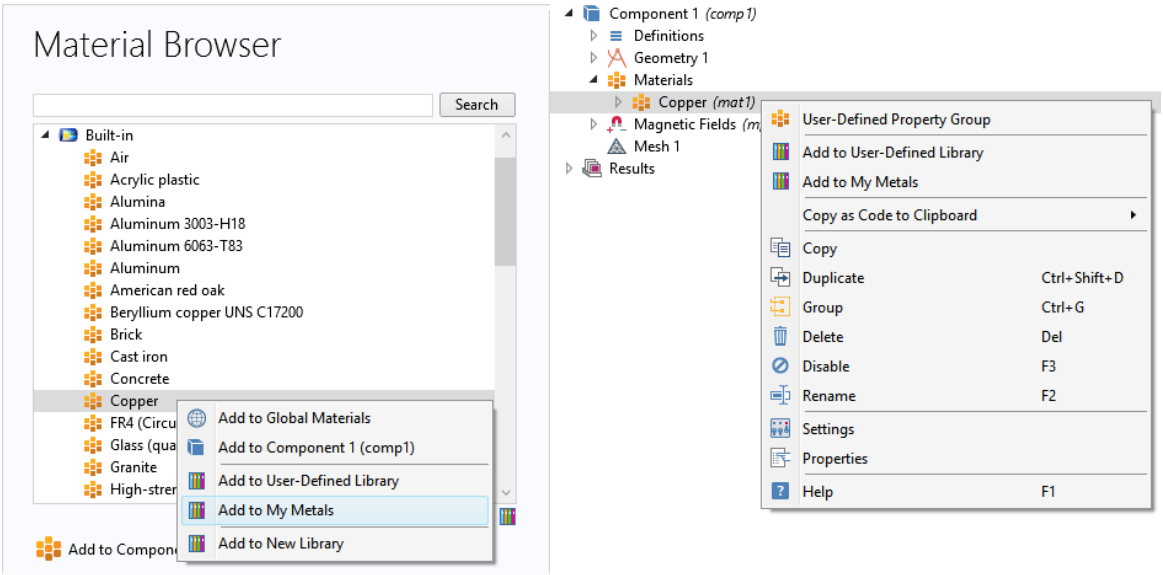

Figure 9-14: Adding a predefined material to a new user-defined library using the Material Browser (left) and after adding a material to the Model Builder (right).

You can also duplicate a material node to start with the defined material properties for that material and then modify some of them to match some similar material that you want to add.

Using the Add Material Window

1 In the **Home** or **Materials** toolbar, click **Add Material** to open the **Add Material** window.

2 Locate the material you want to add, **Copper** for example, and click **Add to Component**.

3 In the **Materials** toolbar, from the **Add to Library** menu, select **Add to** `<material library name>`. Or in the **Model Builder**, right-click **Copper** and choose an option. See Figure 9-14.

Adding a Blank Material to a Material Library

1 In the **Materials** toolbar, click **Blank Material** . An empty **Material** node is added under **Materials** in the **Model Builder**.

2 Add material properties to it as desired to define a new material for the user-defined material library.

3 In the **Materials** toolbar, from the **Add to Library** menu, select **Add to** `<material library name>`. Or in the **Model Builder**, right-click **Material** and choose an option. See Figure 9-14.

4 Right-click the **Material** node to **Rename Selected** material to a more meaningful name.

EDITING MATERIALS IN A USER-DEFINED MATERIAL LIBRARY

To edit materials in a user-defined material library, open it in the COMSOL Desktop as any other MPH-file. The MPH-file for a user-defined material library contains its materials only (under **Global Definitions>Materials**). You can then edit and modify any aspect of the material in that user-defined library, such as the values of some material properties. When you are done, save the MPH-file for the user-defined material library (under the same name and in the same location). Then restart the COMSOL Desktop to load the updated materials from the user-defined material library.

REMOVING A USER-DEFINED MATERIAL FROM A MATERIAL LIBRARY

In the **Materials** toolbar, click **Browse Material** to open the **Material Browser**. Locate the material to remove. Right-click the material and select **Remove Selected** ( ).

Restoring a Deleted User-Defined Library

If the **User-Defined Library** node is deleted in error from the **Material Browser**, you can restore it by following the steps in Creating a New Material Library and Adding and Editing Materials and then add the file to the Material Browser.

Using Functions in Materials

Functions are useful for describing material properties as, for example, functions of temperature or pressure.

Adding a Function to the Material

Material functions are either automatically added to the **Model Builder** sequence (usually with materials from the material library) or functions can be added based on individual requirements.

1 Add a material to the **Component** node (see The Material Browser Window and The Add Material Window).

2 Add an **Analytic** ( ), **Interpolation** ( ), or **Piecewise** ( ) function.

Win	To add an **Analytic** ( ), **Interpolation** ( ), or **Piecewise** ( ) function: • On the **Materials** toolbar, click **Analytic**, **Interpolation**, or **Piecewise**. • Right-click a property group node (for example, **Basic**) and select a function from the **Functions** list.

Mac Linux	To add an **Analytic** ( ), **Interpolation** ( ), or **Piecewise** ( ) function: • Right-click a property group node, for example, **Basic** and select a function from the **Functions** list. • On the **Materials** contextual toolbar, click **Analytic**, **Interpolation**, or **Piecewise**.

- Select **Analytic** to add an analytic function of one or more input arguments.
- Select **Interpolation** to add an interpolation function that can interpolate from structured data (defined on a grid) or unstructured data (defined on a generic point cloud).
- Select **Piecewise** to add a piecewise function that is useful if a material property has different definitions on different intervals. The intervals must not overlap, and there cannot be any holes between intervals.

	• Defining an Analytic Function • Analytic, Interpolation, and Piecewise

	Once a function is created, you can use it for any property in the same property group.

Defining an Analytic Function

Assume that you want to define the density ρ_1 for a material as a function of pressure and temperature: $\rho_1=\rho_1(p,T)$. You can name the function `rho1(p,T)` and use the expression `p*0.02897/8.314/T` to define the function.

1 On the **Materials** toolbar, click the **Browse Materials** , **Add Material** , or **Blank Material** button to add a new material to the Component (or use an existing material where density is not defined, or redefine the current expression for the density).

2 Add a **Density** property to the material.

a In the **Model Builder**, click the **Material** node.

b In the **Settings** window for **Material**, click to expand the **Material Properties** section. Under **Basic Properties**, right-click **Density** and **Add to Material**.

A **Density** property is added to the **Basic** property group.

3 In the **Model Builder**, under the material node, right-click **Basic** and select **Functions>Analytic**. This adds an **Analytic** subnode ( ) under **Basic**.

4 On the **Settings** window for **Analytic**, enter `rho1` in **Function name**. Replace the default name.

5 Under the **Definition** section:

a In the **Expression** field, enter `p*0.02897/8.314/T`.

b In the **Arguments** column, enter `p,T`.

6 Under **Units**:

a In the **Arguments** field, enter `Pa, K` as the units for the pressure and the temperature, respectively.

b In the **Function** field, enter `kg/m^3` as the unit for the function's output (density). The function `rho1` can now be used to define the density in your material.

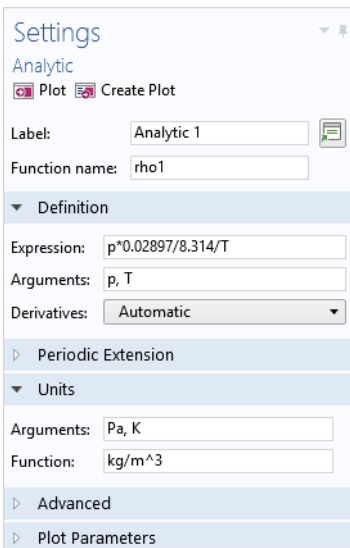

7 Click the **Material** node. In the **Settings** window for **Material**, under **Material Contents**, enter `rho1(p,T)` in the **Value** column (in the **Density** row).

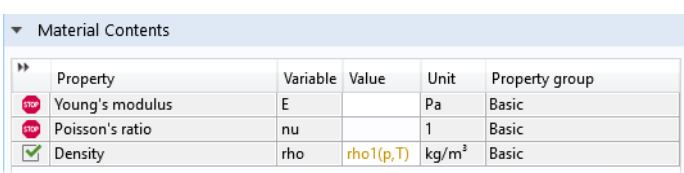

Click the **Basic** node to notice that the **Density** analytic function is defined in the **Settings** window for **Property Group** under **Output Properties**. The expression will be orange if there are no variables `p` and `T` for pressure and temperature, respectively, defined in the component. See Figure 9-15.

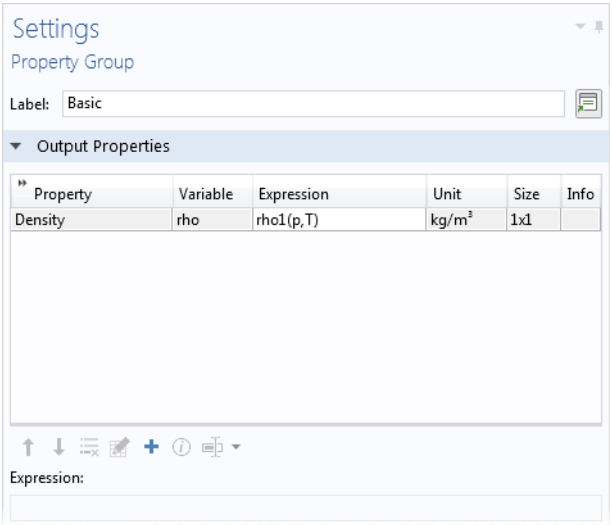

Figure 9-15: A density property is defined using an analytic function.

Working with External Materials

The External Material Model

A general external material model defines a relationship between a number of *input quantities* and a number of *output quantities*, a relationship that may also depend on *model parameters* and stored *states*. From the physics interfaces' point of view, an external material model is a black box, which may implement any relationship between provided input and required output quantities.

The external material model is implemented as a function with a C calling convention, compiled and linked to create a dynamically linked library that can be called from a material feature in COMSOL Multiphysics at runtime. In each solver iteration, current values of the input quantities and model parameters are passed together with previous values of model states as arguments to the external function. The external function is, in return, expected to write new values of model outputs, their partial derivatives with respect to model inputs, as well as updated state values to other preallocated function arguments.

The following sections provide an overview of the external materials framework, as well as details on the built-in interface types and instruction for compiling and linking a shared library.

	As a security precaution, running code contained in external libraries is by default not allowed in a new COMSOL installation. Therefore, in order to use external material models, you must open the **Preferences** dialog box, go to the **Security** page, and select **Allow external libraries**.

Using External Materials in Physics Interfaces

In order for a physics interface to make use of external materials, it must contain one or more features that provide input quantity definitions and make use of returned output quantities in equations and postprocessing expressions. Such features are currently available in the Solid Mechanics; Membrane; Magnetic Fields; and Magnetic Fields, No Currents interfaces.

	• Using external materials in Solid Mechanics or Membrane requires a Structural Mechanics Module or MEMS Module license. • AC/DC interfaces supporting external materials are only available with an AC/DC Module license, except for Magnetic Fields in 2D.

EXTERNAL MATERIAL INTERFACE TYPES

Given that a physics feature requires certain output quantities and defines certain input quantities, there are many possible ways to set up a call to an external function, including declarations of material properties and states. The required interface specification, or *interface type*, is contained in an *external material socket*, which does a number of different things:

- It defines the call syntax for the external material functions; that is, it defines the function name, return type, and the number of arguments with their data types and sizes.
- It defines a mapping between input and output quantity tensor components in the COMSOL Multiphysics variable namespace and positions in external function arguments.
- It defines a mapping between function argument positions and partial derivatives of outputs with respect to inputs.

- It decides which input quantities should be evaluated at the last converged step — rather than at the last iteration — and sets up states for these variables.
- It declares material model state variables and maps them to positions in the function arguments.
- It declares required material properties and maps them to the function arguments.
- It specifies error handling procedures, including error messages for various exit conditions.

The call syntax is in general not fixed for a given socket. Most sockets allow socket parameters to control certain aspects of the socket behavior, including:

- Whether to pass arguments as real or complex numbers.
- Whether to call an initialization function in the external library before the solver is started.
- Whether to call a cleanup function in the external library.
- What user-defined state array names to declare and pass to the external function, as well as the size of each array.
- Whether to add a preallocated string argument of a chosen size to the argument list, to which a detailed error message can be written if the external material function fails in some way.
- Whether to add a number of string arguments at the end of the argument list.

For an external shared library to be compatible with COMSOL Multiphysics, it must follow the conventions specified by some socket. Conversely, when using an existing external library in a multiphysics model, it is important to choose the right **Interface type** and parameters. Failure to do so will result in the external library being called with unexpected arguments, leading to arbitrary behavior.

It is not necessary for a socket to define all output quantities required by a physics feature. The socket and external library may compute only some quantities, while others are left to be specified by property groups under the External Material feature. For example, the built-in General stress-strain relation socket only returns second Piola-Kirchhoff stress as output, while the physics features using this interface type also may require the material density. The density may instead be specified as an expression in the Basic property group.

It is also possible to set the **Interface type** to **None** to select no socket and instead set up the relation between input and output quantities as expressions directly in an external material feature. This behavior is intended mostly for testing and debugging of multiphysics models. Note that no external material function will be called in this case.

Sockets and associated material property groups are identified by an ID tag that must be unique among all COMSOL installations between which files will be shared. In order to avoid conflicts between built-in sockets and future user-developed sockets, a full Java-style naming convention has been adopted. Therefore, for example, the built-in General H(B) relation socket has the unique ID `com.comsol.generalHBRelation` and the associated material property group has tag and name `comcomsolgeneralHBRelation` — that is, a direct concatenation of the ID.

SOLVER ITERATIONS AND STATE UPDATES

This section describes quantities as being evaluated either at the *current* step or at the *previous converged* step. This is related to the iteration pattern of the solvers. The external material functionality is primarily intended for modeling materials with some kind of memory or path dependence (for example, inelastic solid materials or materials exhibiting electromagnetic hysteresis). This means that simulations must be performed in steps over an interval of time or some parameter (which can often be interpreted as a pseudo-time).

Whether a time-dependent or parametric solver is used, taking a step forward requires solving a nonlinear problem, which is typically an iterative procedure. In order for the convergence to be efficient, the modified Newton solver

used needs correct Jacobian information (the Jacobian is sometimes called the *tangential stiffness matrix*), which must be provided by the external material functions in the form of partial derivatives of output argument components with respect to input argument components. When the nonlinear iteration converges, the solution for that time step or parameter step is stored, and the solver moves on to the next step.

The external material functions are typically called in each iteration in the inner nonlinear loop. Arguments that are evaluated at the *current* step are reevaluated at each inner iteration, while arguments defined at the previous converged step retain the value they had when the previous nonlinear iteration converged; that is, the value that was last stored. State variable arguments are passed to the external material function with the same previous converged values in each inner nonlinear iteration. The external material function is expected to overwrite this previous value with a new value corresponding to the current iteration, but this value will only be stored and the states updated when the inner nonlinear iteration converges.

RESULT PRESENTATION

The external material function may also be called during result presentation. In COMSOL Multiphysics, the stored solution consists of the degrees of freedom plus any possible state variables.

As an example, if you have coded your own elastoplastic material model for solid mechanics, you will typically store the plastic strains as states. If you then during result presentation make a plot of the stresses, the material function is called in order to compute the stresses from the displacements and plastic strains. This will happen at a large number of locations in the mesh.

The states are stored at the integration points, so if you request integration point results of the right order, there will be a call to the external material with a consistent already converged state. If the function is well coded, it will then return the stress state after a single iteration.

Often the material function is called from a location that is not an integration point (for example, a mesh node). In that case, the values of the state variables are taken from the closest integration point, while the total strains are computed from the displacement field gradients at the evaluation location. This combination does in general not provide a converged state, so iterations will be needed inside the material function in order to find the stress state. This can have several negative effects:

- The iterations will make the evaluation more expensive.
- The accuracy is decreased, since the state variable values are taken from a neighboring location.
- In the worst case, evaluation in the material function fails completely. What happens in this case depends on how you handle exceptions.

For these reasons it is advantageous, both from a performance and an accuracy point of view, to evaluate results only at the appropriate integration points. In order to ensure that, you can add the gpeval operator to your expressions. Instead of plotting for example `solid.mises`, use an expression like `gpeval(4,solid.mises)`.

Built-in Material Function Interface Types

There are currently six different built-in external material function interface types, or *sockets*, which have many traits in common:

- General Stress-Strain Relation
- General Stress-Deformation Relation
- Inelastic Residual Strain
- Inelastic Residual Deformation
- General H(B) Relation
- General B(H) relation

GENERAL ARGUMENTS FOR THE BUILT-IN MATERIAL FUNCTIONS

These built-in material function interfaces expect the external library to contain at least an evaluation function called `eval`, with a signature following the following pattern:

```
int eval(...,                  // Interface-type-specific arguments
         int *nPar,            // Number of material model parameters, input
         double *par,          // Material model parameters, input
         int *nStates1,        // Size of first state array, input, optional
         double *states1,      // First state array, input/output, optional
         int *nStates2,        // Size of second state array, input, optional
         double *states2, ...  // Second state array, input/output, optional
         char *errMsg,                 // Error message, output, optional
         char *arg1, char *arg2, ...)  // Extra string arguments, optional
```

The user is required to specify an array of material model parameters, called `par`. The number of parameters `nPar` is specified implicitly as the length of the material property array, which must be defined as a property in a property group under the calling **External Material** feature or set in the **Material Contents** table in the **External Material** node's settings. The material property expression list specified in this way is interpreted as a list of model expressions which are evaluated at the points for which external material outputs are requested.

The user may also specify a list of state arrays to be defined at each integration point, as well as the length of each array. The array lengths and values are passed to the external function in consecutive pairs of arguments, here formally called `nStates1`, `states1`, `nStates2`, `states2`, etc. Note that the state arrays are both input and output: when the function is called, they contain the previous step converged values of the states; on return, they must contain the state values to be stored if the solver decides to proceed to the next step.

The optional `errMsg` argument allows returning a detailed error message if the evaluation must be terminated abnormally, or to pass a warning or log message to be displayed in the solver log. It is a preallocated string of specified size.

The property group which stores the `par` array may also specify another array of *extra function library string arguments*, `arg`, which are passed unevaluated as separate string arguments to the external material function. Note that the number of string arguments passed in this way is not checked.

Initialization and Cleanup

In addition to the `eval` function, the external library may contain functions called `init` and `cleanup`. The initialization function has the following signature:

```
int init(int *nPar,                    // Number of material model parameters
         int *nStateArgs,              // Number of user-defined state vectors
         int *stateArgsSize,           // User-defined state vector sizes
         int *errMsgSize,              // Size of error message output argument
         int *nStringArgs,             // Number of string array arguments
         char *errMsg,                 // Error message argument, output, optional
         char *arg1, char *arg2, ...)  // Extra string arguments, optional
```

The first five arguments are always passed. The remaining may or may not be present, depending on settings in the **External Material** node from which the external library is called. If `errMsg` is not present, the `errMsgSize` argument will be negative. The number of extra `char*` arguments at the end of the argument list is given by the `nStringArgs` argument.

The initialization function is called every time a new native representation of the Multiphysics problem is created. In a solver sequence, this point corresponds to the **Compile Equations** node. But native representations may also be

created at other times, for example when showing a default solver. You can rely on the `init` method being called at least once before the solver is started, but it may be called multiple times.

> The arguments passed to the `init` method describe the way that the `eval` function will subsequently be called. Implementing the `init` method to check that argument numbers and sizes agree with the implementation in the `eval` function is good practice, and can prevent unexpected program termination caused by reading outside the arguments actually passed.

The `cleanup` function is called when the native representation is discarded. This typically happens when a solution object is overwritten or otherwise discarded, at the latest at program exit. The function has the following signature:

```
int cleanup(char *errMsg,                  // Error message argument, output, optional
            char *arg1, char *arg2, ...)   // Extra string arguments, optional
```

The arguments passed are the same as the last arguments to the `init` function, with the same sizes and values.

> Note that the cleanup function is called immediately if the `init` function terminates with an error. It must therefore be written in such a way that it is tolerant against missing arguments.

Error Handling, Warnings, and Log Messages

The functions must return an integer values. For the `eval` function, the following return values are defined:

TABLE 9-18: ACCEPTED RETURN VALUES FOR THE EVAL FUNCTION

RETURN VALUE	MEANING
0	Normal exit
1	Error: "Wrong number of parameters"
2	Error: "Wrong number of states"
-1	Normal exit, but display warning
-2	Normal exit, but display log message if there is an `errMsg` argument
anything else	Unspecified error

For the `init` function, the following return values are defined:

TABLE 9-19: ACCEPTED RETURN VALUES FOR THE INIT FUNCTION

RETURN VALUE	MEANING
0	Normal exit
1	Error: "Wrong number of parameters"
2	Error: "Wrong number of states"
3	Error: "Wrong number of arguments"
4	Error: "Insufficient error message storage"
-1	Normal exit, but display warning
-2	Normal exit, but display log message if there is an `errMsg` argument
anything else	Unspecified error

For the `cleanup` function, any nonzero return value is reported as "External material cleanup error".

When the return value signals an error, it is also possible to supply an error details string in the optional output argument, `errMsg`. The error message argument, if present, is a preallocated string of a specified size.

You can also use the `errMsg` argument to return a warning or a log message. If the return value is `-1`, the contents of `errMsg` are displayed as a warning in the solver log and in a **Warnings** node under the solver node; when the return value is `-2`, the message is only displayed in the log.

> Repeated warning messages are only displayed once. If you want the same warning to display each time the `eval` function returns `-1`, you must make the `errMsg` strings unique, for example by numbering the warnings.

GENERAL STRESS-STRAIN RELATION

The **General stress-strain relation** socket implements a stress-strain relation computing a second Piola-Kirchhoff stress tensor given the current Green-Lagrange strain together with a material property vector and a vector of stored states. The expected external material function signature is:

```
int eval(double *el,           // Green-Lagrange strain, input
         double *Sl,           // Second Piola-Kirchhoff stress, output
         double *Jac,          // Jacobian of stress with respect to strain,output
         int *nPar,            // Number of material model parameters, input
         double *par,          // Material model parameters, input
         int *nStates1,        // Size of first state array, input, optional
         double *states1,      // First state array, input/output, optional
         int *nStates2,        // Size of second state array, input, optional
         double *states2, ...  // Second state array, input/output, optional
         char *errMsg,                 // Error message argument, output, optional
         char *arg1, char *arg2, ...)  // Extra string arguments, optional
```

The `e` and `s` tensors are given in Voigt order; that is., the components in `e` are $\{e_{xx}, e_{yy}, e_{zz}, e_{yz}, e_{xz}, e_{xy}\}$ and similarly for `s`. The Jacobian `Jac` is a 6-by-6 matrix of partial derivatives of components of `s` (rows) with respect to components of `e` (columns); the matrix is stored in row-major order. All components refer to the local material coordinate system. Note that `Jac` in general is non-symmetric since the three last components of `e` represent strain tensor components, rather than engineering shear ($\gamma_{ij} = 2e_{ij}$). For an explanation of remaining arguments, see General Arguments for the Built-In Material Functions.

GENERAL STRESS-DEFORMATION RELATION

The **General stress-deformation relation** socket implements a stress-deformation relation computing a second Piola-Kirchhoff stress tensor given the current and previous deformation gradient, the current and previous local temperature, the local material coordinate system, a material property vector, plus standard optional arguments. The expected external material function signature is:

```
int eval(double *FlOld,         // Deformation gradient at previous step, input
         double *Fl,            // Deformation gradient at current step, input
         double *tempOld,       // Temperature at previous step, input
         double *temp,          // Temperature at current step, input
         double *sysT,          // Local material coordinate system, input
         double *delta,         // Time step / Continutation parameter increment
         double *Sl,            // Second Piola-Kirchhoff stress, output
         double *Jac,           // Jacobian of stress with respect to deformation
                                // gradient,output
         int *nPar,             // Number of material model parameters, input
         double *par,           // Material model parameters, input
         int *nStates1,         // Size of first state array, input, optional
         double *states1,       // First state array, input/output, optional
         int *nStates2,         // Size of second state array, input, optional
         double *states2, ...   // Second state array, input/output, optional
         char *errMsg,                 // Error message argument, output, optional
         char *arg1, char *arg2, ...)  // Extra string arguments, optional
```

The `FlOld` and `Fl` tensors are given as 3-by-3 matrices expanded in row-major order, where the row index refers to global (displacement) directions, and the column index refers to directions in the local material coordinate

system. The coordinate system itself, `sysT`, is passed as a 1-by-9 concatenation of the local system's three covariant base vectors expressed in global material coordinates. The argument `delta` is a scalar reserved for future use.

The output stress tensor, `Sl`, is given in Voigt order; that is, the components in `Sl` are $\{Sl_{xx}, Sl_{yy}, Sl_{zz}, Sl_{yz}, Sl_{xz}, Sl_{xy}\}$, where the indices refer to the local material coordinate system. The Jacobian `Jac` is a 6-by-9 matrix of partial derivatives of components of `Sl` (rows) with respect to components of `Fl` (columns); the matrix is stored in row-major order. For an explanation of remaining arguments, see General Arguments for the Built-In Material Functions.

INELASTIC RESIDUAL STRAIN

The **Inelastic Residual Strain** socket implements an update procedure for an additive inelastic contribution to the total Green-Lagrange strain. Total stress and strain at the previous converged step, current total strain, current temperature, a reference temperature, a material property vector, and a vector of stored states are passed as inputs.

```
int eval(double *sOld,          // Second Piola-Kirchhoff stress at previous step, input
         double *eOld,          // Green-Lagrange strain at previous step, input
         double *e,             // Green-Lagrange strain at current step, input
         double *T,             // Temperature, input
         double *Tref,          // Strain reference temperature, input
         double *eInel,         // Inelastic Green-Lagrange strain state, input/output
         double *Jac,           // Jacobian of inelastic strain, output
         int *nPar,             // Number of material model parameters, input
         double *par,           // Material model parameters, input
         int *nStates1,         // Size of first state array, input, optional
         double *states1,       // First state array, input/output, optional
         int *nStates2,         // Size of second state array, input, optional
         double *states2, ...   // Second state array, input/output, optional
         char *errMsg,                  // Error message argument, output, optional
         char *arg1, char *arg2, ...)   // Extra string arguments, optional
```

The `sOld`, `eOld`, `e`, and `eInel` tensors are given in Voigt order (that is, the components in `e` are $\{e_{xx}, e_{yy}, e_{zz}, e_{yz}, e_{xz}, e_{xy}\}$) and similarly for the other tensors. The Jacobian `Jac` is a 6-by-6 matrix of partial derivatives of components of `eInel` (rows) with respect to components of `e` (columns); the matrix is stored in row-major order. Note that the primary output quantity `eInel` is declared as states, meaning that the argument on entry contains the previous converged step values. The temperature arguments `T` and `Tref` are standard model inputs, which are specified in the physics feature calling the external material where the Inelastic residual strain socket is selected. For an explanation of remaining arguments, see General Arguments for the Built-In Material Functions.

INELASTIC RESIDUAL DEFORMATION

The **Inelastic Residual Deformation** socket implements an update procedure for a inelastic contribution to the deformation gradient. Total stress and deformation at the previous converged step, current total deformation, current temperature, a reference temperature, plus standard optional arguments are passed as inputs.

```
int eval(double *sOld,          // Second Piola-Kirchhoff stress at previous step, input
         double *FlOld,         // Deformation gradient at previous step, input
         double *Fl,            // Deformation gradient at current step, input
         double *T,             // Temperature, input
         double *Tref,          // Strain reference temperature, input
         double *FlInel,        // Inelastic Green-Lagrange strain state, input/output
         double *Jac,           // Jacobian of inelastic strain, output
         int *nPar,             // Number of material model parameters, input
         double *par,           // Material model parameters, input
         int *nStates1,         // Size of first state array, input, optional
         double *states1,       // First state array, input/output, optional
         int *nStates2,         // Size of second state array, input, optional
         double *states2, ...   // Second state array, input/output, optional
         char *errMsg,                  // Error message argument, output, optional
         char *arg1, char *arg2, ...)   // Extra string arguments, optional
```

The `sOld`, tensor is given in Voigt order (that is, the components in `s` are $\{s_{xx}, s_{yy}, s_{zz}, s_{yz}, s_{xz}, s_{xy}\}$). The deformation gradient arguments `FlOld`, `Fl`, and `FlInel` are passed as 3-by-3 matrices expanded in row-major order, where the row index refers to global (displacement) directions, and the column index refers to directions in the local material coordinate system. The Jacobian `Jac` is a 9-by-9 matrix of partial derivatives of components of `FlInel` (rows) with respect to components of `Fl` (columns); the matrix is stored in row-major order. Note that the primary output quantity `FlInel` is declared as states, meaning that the argument on entry contains the previous converged step values. The temperature arguments `T` and `Tref` are standard model inputs, which are specified in the physics feature calling the external material where the Inelastic residual strain socket is selected. For an explanation of remaining arguments, see General Arguments for the Built-In Material Functions.

GENERAL H(B) RELATION

The **General H(B) relation** socket implements a generalization of an H-B curve. It computes an updated magnetic field corresponding to an updated magnetic flux density, given the magnetic field and magnetic flux density at the previous converged step. A material property vector and a vector of stored states are passed as additional input. Typical implementations will use extra states to model hysteresis.

```
int eval(double *oldB,          // Magnetic flux density at previous step, input
         double *B,             // Magnetic flux density, input
         double *H,             // Magnetic field state, input/output
         double *Jac,           // Jacobian of H with respect to B, output
         int *nPar,             // Number of material model parameters, input
         double *par,           // Material model parameters, input
         int *nStates1,         // Size of first state array, input, optional
         double *states1,       // First state array, input/output, optional
         int *nStates2,         // Size of second state array, input, optional
         double *states2, ...   // Second state array, input/output, optional
         char *errMsg,                  // Error message argument, output, optional
         char *arg1, char *arg2, ...)   // Extra string arguments, optional
```

The magnetic flux densities `oldB` and `B` and the magnetic field `H` are passed as arrays of length 3. The Jacobian `Jac` is a 3-by-3 matrix of partial derivatives of components of H (rows) with respect to components of B (columns); the matrix is stored in row-major order. Note that the primary output quantity H is declared as states, meaning that the argument on entry contains the previous converged step values. For an explanation of remaining arguments, see General Arguments for the Built-In Material Functions.

GENERAL B(H) RELATION

The **General B(H) relation** socket implements a generalization of a B-H curve. It computes an updated magnetic flux density corresponding to an updated magnetic field, given the magnetic field and magnetic flux density at the previous converged step. A material property vector and a vector of stored states are passed as additional input. Typical implementations will use extra states to model hysteresis.

```
int eval(double *oldH,          // Magnetic field at previous step, input
         double *H,             // Magnetic field, input
         double *B,             // Magnetic flux density state, input/output
         double *Jac,           // Jacobian of Bwith respect to H, output
         int *nPar,             // Number of material model parameters, input
         double *par,           // Material model parameters, input
         int *nStates1,         // Size of first state array, input, optional
         double *states1,       // First state array, input/output, optional
         int *nStates2,         // Size of second state array, input, optional
         double *states2, ...   // Second state array, input/output, optional
         char *errMsg,                  // Error message argument, output, optional
         char *arg1, char *arg2, ...)   // Extra string arguments, optional
```

The magnetic fields `oldH` and `H` and the magnetic flux density `B` are passed as arrays of length 3. The Jacobian `Jac` is 3-by-3 matrix of partial derivatives of components of `B` (rows) with respect to components of `H` (columns); the matrix is stored in row-major order. Note that the primary output quantity `B` is declared as states, meaning that the

argument on entry contains the previous converged step values. For an explanation of remaining arguments, see General Arguments for the Built-In Material Functions.

	For examples showing how to implement and use external materials, see • http://www.comsol.com/model/external-material-examples-structural-mechanics-32331 • http://www.comsol.com/model/external-materials-general-hb-bh-relation-32321

Library of Utility Functions for Structural Mechanics

When modeling materials for structural mechanics, there are many common operations that you may need, such as

- Computing principal stresses and other eigenvalues
- Matrix inversion
- Converting tensors between matrix and vector representation

A large library of such utility functions which you can call from your external material function is available.

	• For a complete list of utility functions and how they are used, see Using External Materials in the *Structural Mechanics User's Guide*. • For instructions how to include utility functions in your external material library file, see Linking with Utility Functions.

How to Compile and Link an External Material Model

To export functions from the DLL when using Microsoft Visual Studio to compile your library, you must declare the functions as `__declspec(dllexport)`. Therefore, to write a source code that works across platforms, use the following `#define` pattern:

```
#ifdef _MSC_VER
#define EXPORT __declspec(dllexport)
#else
#define EXPORT
#endif

EXPORT <return_type> eval(<arguments>) { }
```

COMPILING AND LINKING

To compile the function into a library, place it in a file (here called `ext.c` as an example) and proceed as follows depending on the platform:

	See http://www.comsol.com/system-requirements for information about supported compiler versions.

- 64-bit Windows with Microsoft Visual Studio 2017:
  - Start **Visual Studio 2017>Visual Studio Tools>VC>x64 Native Tools Command Prompt for VS 2017** from the Windows Start menu.
  - `cd` to the directory that contains `ext.c`.
  - `cl /MT /c ext.c`
  - `link /OUT:ext.dll /DLL ext.obj`
- 64-bit Linux with Intel Compiler:
  - `cd` to the directory that contains `ext.c`.
  - `icc -fPIC -c ext.c`
  - `icc -shared -fPIC -o ext.so ext.o -ldl`
- 64-bit macOS with Intel Compiler:
  - `cd` to the directory that contains `ext.c`.
  - `icc -fPIC -c ext.c`
  - `icc -dynamiclib -fPIC -o ext.dylib ext.o`

For other compilers, refer to the compiler's documentation for instructions on how to compile and create a shared library.

LINKING WITH UTILITY FUNCTIONS

To use the provided utility functions in your external material function, you need to reference a header file that contains the utility function declarations. Add the following line to your file (again, called `ext.c` as an example):

```
#include "csextutils.h"
```

Proceed as follows, depending on the platform:

- 64-bit Windows with Microsoft Visual Studio 2017:
  - Start **Visual Studio 2017>Visual Studio Tools>VC>x64 Native Tools Command Prompt for VS 2017** from the Windows Start menu.
  - `cd` to the directory that contains `ext.c`.
  - `cl /MT /c ext.c /I C:\Program Files\COMSOL\COMSOL55\Multiphysics\data\extmat`
  - `link /OUT:ext.dll /DLL ext.obj C:\Program Files\COMSOL\COMSOL55\Multiphysics\data\extmat\win64\csextutils.lib`
- 64-bit Linux with Intel Compiler:
  - `cd` to the directory that contains `ext.c`.
  - `icc -fPIC -c -I/usr/local/comsol55/multiphysics/data/extmat ext.c`
  - `icc -shared -fPIC -o ext.so ext.o -L/usr/local/comsol55/multiphysics/lib/glnxa64 -lcsextutils`
- 64-bit macOS with Intel Compiler:
  - `cd` to the directory that contains `ext.c`.
  - `icc -fPIC -c -I/Applications/COMSOL55/Multiphysics/data/extmat ext.c`
  - `icc -dynamiclib -fPIC -o ext.dylib ext.o -L/Applications/COMSOL55/Multiphysics/lib/maci64 -lcsextutils`

For other compilers, refer to the compiler's documentation for instructions on how to compile and create a shared library.

Known Issues for External Materials

The external materials framework, being a rather recent addition to COMSOL Multiphysics, suffers from a few known issues that may affect usability in some cases:

- There is no unit support: Inputs are passed to the external function in the model's base unit system and outputs are interpreted in the same system.
- Shared libraries containing external material functions are under some circumstances loaded the first time they are used and then never reloaded. To avoid having to repeatedly restart COMSOL Multiphysics while developing an external material function, you can simply change the name of the linked library each time you make a change to it.
- The way the external functions are called is not fault tolerant in any way. This means that reading or writing outside allocated memory in an external function will typically make the COMSOL Desktop crash. Exercise caution when coding, and always save your COMSOL model before running it with an external material.

External Material

The **External Material** node ( ) sets up an interface between a physics feature and functions in an external shared library. In addition, it contains most of the functionality of a standard **Material** node, letting you add arbitrary material properties and property groups. Some aspects of a material can be handled by an external library, while others are defined internally in property groups.

	The **External Material** node is only available under the **Global Definitions>Materials** node, not under **Materials** inside components. To use property groups under an **External Material** as domain material on geometric entities in a component, use a Material Link node.

	This section focuses on using a material model from an existing external library in your COMSOL Multiphysics model. General information about the external materials framework and how to create your own custom library can be found under Working with External Materials.

To add an external material to a user-defined material library, right-click the **External Material** node and choose **Add to User-Defined Library** ( ).

The **Settings** window for the **External Materials** node contains the following sections:

LIBRARY FOR WINDOWS, 64-BIT

Use this section to define a library for the Windows® operating system. Enter a **Library** path and name (the complete network path), or click **Browse** to locate a library to import. The library must be a DLL (native dynamic library) file.

LIBRARY FOR LINUX, 64-BIT

Use this section to define a library for the Linux® operating system. Enter a **Library** path and name (the complete network path), or click **Browse** to locate a library to import. The library must be a .so (native dynamic library) file.

LIBRARY FOR MACOS, 64-BIT

Use this section to define a library for the macOS operating system. Enter a **Library** path and name (the complete network path), or click **Browse** to locate a library to import. The library must be a .dylib (native dynamic library) file.

All libraries must be for a 64-bit architecture.

EXTERNAL MATERIAL MODEL

If the external material DLL is not thread safe, clear the **Thread safe** check box. If the DLL is thread safe, several threads can make calls to the DLL at the same time. By clearing the **Thread safe** check box, you prevent the DLL from being used by more than one thread at the same time.

Select the appropriate **Interface type** matching your library. The default is **None**; other options may vary between COMSOL installations. The following types are preinstalled:

- **General stress-strain relation**
- **General stress-deformation relation**
- **Inelastic residual strain**
- **Inelastic residual deformation**
- **General H(B) relation**
- **General B(H) relation**

If the chosen external library contains initialization and cleanup functions and the interface type allows it, select **Call init()** and **Call cleanup()** as appropriate.

If allowed for the chosen interface type and external library, select the **Pass arguments as complex** check box to use `complex` rather than `double` as the base type in all numeric array arguments to the external functions.

If required by the chosen interface type, specify a **State base name** for each state array that must be stored at each evaluation point and provide a corresponding array size under **Number of states**. Actual state variables are created by adding the *<matname>*.`state.` namespace as a prefix and appending a state index to the given base names. For example, if for a material with name `extmat1` you request a state array of length 2 with **State base name** `p`, the state values can be accessed during and after a solution as `extmat1.state.p1` and `extmat1.state.p2`.

	The maximum total number of arguments in an `eval` function signature is 40. This means that the number of optional arguments, such as pointers to state arrays and error messages, will be limited by the number of required arguments for the specific `eval` function. For example, the maximum number of optional arguments in the **General Stress-Strain Relation** is 35.

If the external library's functions are implemented so as to return error details, select **Return error details** and specify a **Maximum error message length.** A preallocated string of the specified length will then be passed as output argument to all functions.

The **Required input quantities**, **Output quantities**, and **Model states** tables provide an overview of the interface, including which quantities are passed to and from calling physics features, which states are declared, and which component variables are defined by the material feature. Note that all variables are defined in the material's namespace. To directly access, for example, the first axial component of a second Piola-Kirchhoff stress output outside the scope of an **External Material** node with the name `extmat1`, use the variable name `extmat1.output.S11`.

Components of the **Required input quantities** are normally defined by a physics feature calling the external material. When using an external material in equation-based modeling, you can set the inputs up manually by defining the required input components (in the material's namespace) as global variables. For example, if external material `extmat1` requires the temperature T as input, define a global variable called `extmat1.input.T`.

Use the **Init** column in the **Model states** table to specify initial values for all internal states used by the external function. This includes both specific states required by the chosen **Interface type** and numbered states added by this feature.

MATERIAL PROPERTIES

The **Material Properties** section of an external material is identical to the same section in a common **Material** feature. See The Settings Window for Material for more information.

MATERIAL CONTENTS

The **Material Contents** section of an external material is very similar to the same section in a common **Material** feature (see The Settings Window for Material for more information). The only real difference is that the table shows not only defined output properties and properties required by some physics feature, but also parameters required as input to the external material functions. Depending on the selected **Interface type**, these may appear either as individually named parameters or as a single generic, arbitrary-length parameter array. In the latter case, any particular external library typically requires a specific set of properties in a certain order to be specified as an array inside curly brackets. For example, two required parameters can be specified as `{2e11,0.33}`

The table also shows a row for **Extra library function string arguments**, whose value is expected to be an array of single-quoted strings. These strings are stored in a property group in the same way as other parameters. They are passed to the external library's functions as separate string arguments.

	Parameters and string arguments required as input to the external library functions are stored in a property group subnode with the same name as the selected **Interface type**.

APPEARANCE

The **Appearance** section of an external material is identical to the same section in a common **Material** feature. See The Settings Window for Material for more information.

Module-Specific Material Databases

- See About the Material Databases for an overview of the material databases and the modules in which they are included.
- For more information about customizing the material's appearance in the Graphics window, see The Settings Window for Material.

In this section:

- AC/DC Materials Database
- Batteries and Fuel Cells Materials Database
- Bioheat Materials Database
- Building Materials Database
- Equilibrium Discharge Materials Database
- Liquids and Gases Materials Database
- MEMS Materials Database
- Nonlinear Magnetic Materials Database
- Optical Materials Database
- Piezoelectric Materials Database
- Piezoresistivity Materials Database
- RF Materials Database
- Semiconductor Materials Database
- Thermoelectric Materials Database

AC/DC Materials Database

The electromagnetic material properties that can be stored in this material database, available in the AC/DC Module, are:

- Electrical conductivity and resistivity
- Relative permittivity
- Relative permeability
- Nonlinear B-H curves
- Refractive index

The database contains electromagnetic and other material properties for these materials:

MATERIALS
Copper
Soft Iron (without losses)
Soft Iron (with losses)
Quartz
Graphite
Graphite felt
Silicon Carbide

MATERIALS
Jiles-Atherton Isotropic Hysteretic Material
Demagnetizable Nonlinear Permanent Magnet

Some properties depend on the magnetic flux density, location, or temperature. The database contains, depending on the material and in addition to the more common material properties, the following properties:

PREDEFINED PROPERTIES
Remnant flux density
Reference temperature
Temperature coefficient
Nonlinear B-H curves
Resistivity at reference temperature

Nonlinear Magnetic Materials Database

Batteries and Fuel Cells Materials Database

The Batteries and Fuel Cells materials database is included with the Batteries & Fuel Cells Module and contains the materials listed in Table 9-20. The material property groups (including all associated properties) are listed in Table 9-4.

Literature references are included as Comments entries in the Batteries & Fuel Cells Materials database. These can be viewed using the Properties window of the Model Builder after a material has been added to the model.

TABLE 9-20: BATTERIES & FUEL CELLS MODULE MATERIALS DATABASE

MATERIAL	INTENDED USE
Sulfuric Acid (Electrolyte, Lead-Acid Battery)	Electrolyte
Pb Electrode (Negative, Lead-Acid Battery)	Negative electrode material
PbO2 Electrode (Positive, Lead-Acid Battery)	Positive electrode material
Graphite Electrode, LixC6 MCMB (Negative, Li-ion Battery)	Negative electrode materials
Hard Carbon (Negative, Li-ion Battery)	Negative electrode materials
Silicon electrode, LixSi (Negative, Li-ion Battery)	Negative electrode materials
LTO Electrode, Li4Ti5O12 (Negative, Li-ion Battery)	Negative electrode materials
LCO Electrode, LiCoO2 (Positive, Li-ion Battery)	Positive electrode materials
LFP Electrode, LiFePO4 (Positive, Li-ion Battery)	Positive electrode materials
LMO Electrode, LiMn2O4 Spinel (Positive, Li-ion Battery)	Positive electrode materials
LiNiO2 Electrode (Positive, Li-ion Battery)	Positive electrode materials
NCA Electrode, LiNi0.8Co0.15A10.05O2 (Positive, Li-ion Battery)	Positive electrode materials
NMC Electrode, LiNi1/3Mn1/3Co1/3O2 (Positive, Li-ion Battery)	Positive electrode materials
LiPF6 in 3:7 EC:EMC (Liquid electrolyte, Li-ion Battery)	Electrolyte
LiPF6 in 1:1 EC:DEC (Liquid electrolyte, Li-ion Battery)	Electrolyte
LiPF6 in PC:EC:EMC (Liquid electrolyte, Li-ion Battery)	Electrolyte
LiPF6 in 1:2 EC:DMC and p (VdF-HFP) (Polymer electrolyte, Li-ion Battery)	Electrolyte
LiPF6 in 2:1 EC:DMC and p (VdF-HFP) (Polymer electrolyte, Li-ion Battery)	Electrolyte
HxLiN5 Electrode (Negative, NiMH Battery)	Negative electrode material

TABLE 9-20: BATTERIES & FUEL CELLS MODULE MATERIALS DATABASE

MATERIAL	INTENDED USE
NiOHO-Hx Electrode (Positive discharge, NiMH Battery)	Positive electrode material
NiOHO-Hx Electrode (Positive charge, NiMH Battery)	Positive electrode material

Bioheat Materials Database

The Bioheat materials database contains materials used with the Heat Transfer Module's Bioheat Transfer interface. The properties are given either as a constant value, as a piecewise linear function of the temperature, or as a polynomial approximation function of the temperature that provides a good agreement with the reference, as summarized in the table below. Also see References for the Bioheat Materials Database.

MATERIAL	THERMAL CONDUCTIVITY W/(m·K)	DENSITY kg/m^3	HEAT CAPACITY J/(kg·K)	FREQUENCY FACTOR 1/s	ACTIVATION ENERGY J/mol	REFERENCE
Bone	0.32	1908	1313	—	—	Ref. 5
Fat	0.21	911	2348	4.43e16	1.3e5	Ref. 5, Ref. 4
Liver (human)	0.52	1079	3540	7.39e39	2.577e5	Ref. 5, Ref. 1
Liver (porcine)	polynomial approximation	polynomial approximation	polynomial approximation	—	—	Ref. 6
Lung	piecewise linear function	piecewise linear function	piecewise linear function	—	—	Ref. 6
Muscle	0.49	1090	3421	—	—	Ref. 5
Myocardium (human)	piecewise linear function	piecewise linear function	piecewise linear function	—	—	Ref. 6
Myocardium (porcine)	polynomial approximation	polynomial approximation	polynomial approximation	—	—	Ref. 6
Prostate	0.51	1045	3760	1e91	5.6e5	Ref. 5, Ref. 2
Renal cortex	piecewise linear function	piecewise linear function	piecewise linear function	—	—	Ref. 6
Renal medulla	piecewise linear function	piecewise linear function	piecewise linear function	—	—	Ref. 6
Skin	0.37	1109	3391	4.575e72	4.71e5	Ref. 5, Ref. 3
Spleen	piecewise linear function	piecewise linear function	piecewise linear function	—	—	Ref. 6

Building Materials Database

The Building materials database contains hygroscopic and thermal properties for materials used with the Heat Transfer Module's Moisture Transport interface and Heat and Moisture Transport multiphysics interface.

In addition to thermal properties (thermal conductivity, density, and heat capacity), the following hygroscopic properties are provided:

- Effective thermal conductivity (SI Unit: W/(m·K))
- Moisture content (SI Unit: kg/m^3)
- Moisture diffusivity (SI Unit: m^2/s)
- Vapor resistance factor (dimensionless)
- Vapor permeability (SI Unit: s)

Note that for materials intended to be used as vapor barriers, only the vapor resistance factor and vapor permeability are available.

The properties are given either as a constant value, as a piecewise linear function of the temperature or the relative humidity, or as a polynomial approximation function of the temperature or the relative humidity that provides a good agreement with the reference. The table below summarize the materials, their characteristics and their intended use. Also see References for the Building Materials Database.

MATERIAL	USAGE	CHARACTERISTICS	REFERENCE
Concrete	Building structure	-	Ref. 3
Lime silica brick	Building structure	-	Ref. 3
Wood, pine	Studs, panels	Nominal thickness = 10 mm	Ref. 1, Ref. 2
Gypsum board	Interior board	Nominal thickness = 13 mm	Ref. 1, Ref. 2
Glass wool board	Sheathing	Nominal thickness = 30 mm	Ref. 1, Ref. 2
Cellulose board	Sheathing	Nominal thickness = 25 mm	Ref. 1, Ref. 2
Glass wool batt	Thermal insulation	Nominal thickness = 50 mm	Ref. 1, Ref. 2
Cellulose batt	Thermal insulation	Nominal thickness = 50 mm	Ref. 1, Ref. 2
Cellulose (loose)	Thermal insulation	Nominal thickness = 50 mm	Ref. 1, Ref. 2
Plastic coated paper	Vapor/air barrier	-	Ref. 1, Ref. 2
Expanded polystyrene board (EPS)	Thermal insulation, vapor/air barrier	Board from molded blocks conform to norm EN 13163	Ref. 4
Extruded polystyrene board (XPS)	Thermal insulation, vapor/air barrier	Board of thickness < 60mm, without any occluded gas other than air and CO2, conform to norm EN 13164	Ref. 4

Equilibrium Discharge Materials Database

The Equilibrium Discharge materials database is included with the Plasma Module and contains the materials listed in Table 9-21. The material property groups (including all associated properties) are listed in Table 9-6.

TABLE 9-21: EQUILIBRIUM DISCHARGE MATERIALS DATABASE

MATERIAL
Air
Argon
Helium
Hydrogen
Nitrogen
Oxygen

Liquids and Gases Materials Database

The Liquids and Gases Materials database contains thermal and fluid dynamic properties for a set of common liquids and gases. All properties are given as functions of temperature and at atmospheric pressure, except the density, which for gases is also a function of the local pressure. The database also contains surface and interface tensions for a selected set of liquid/gas and liquid/liquid systems. All functions are based on data collected from

scientific publications. This database is included in the Acoustics Module, CFD Module, Chemical Reaction Engineering Module, Heat Transfer Module, MEMS Module, Pipe Flow Module, and Subsurface Flow Module,

TABLE 9-22: LIQUIDS AND GASES MATERIALS

GROUP	MATERIAL	GROUP	MATERIAL
Gases References 1, 2, 7, and 8	Air	Liquids References 2, 3, 4, 5, 6, 7, 9, 10, and 11	Engine oil
	Nitrogen		Ethanol
	Oxygen		Diethyl ether
	Carbon dioxide		Ethylene glycol
	Hydrogen		Gasoline
	Helium		Glycerol
	Steam		Heptane
	Propane		Mercury
	Ethanol vapor		Toluene
	Diethyl ether vapor		Transformer oil
	Freon12 vapor		Water
	SiF4		R-134A (C2H2F4)
			R-22 (CHClF2)

MEMS Materials Database

The MEMS materials database, included in the MEMS Module and Structural Mechanics Module, contains several materials commonly used in MEMS applications. The materials are divided into metals, semiconductors, insulators, and polymers.

The basic structure of the library comes from the book *Microsensors, MEMS, and Smart Devices* (Ref. 1). The material properties come from two primary sources: the *CRC Handbook of Chemistry and Physics* (Ref. 2) and *MacMillan's Chemical and Physical Data* (Ref. 3). Some of the mechanical properties in the library are more MEMS-specific values from *The MEMS Handbook* (Ref. 4), and most of the semiconductor properties are values from Ref. 5. Most of the PDMS material properties are based on Ref. 7, where Young's modulus is based on Ref. 8.

Ref. 6 provides a valuable resource for cross-checking the insulation material properties.

TABLE 9-23: MEMS MATERIALS

MATERIAL
Metals
Al - Aluminum/Aluminium
Ag - Silver
Au - Gold
Cr - Chrome
Cu - Copper
In - Indium
Ti - Titanium
Fe - Iron
Ni - Nickel
Pb - Lead
Pd - Palladium
Pt - Platine
Sb - Antimon

TABLE 9-23: MEMS MATERIALS

MATERIAL
W - Tungsten
Semiconductors
Diamond (100)
GaAs - Gallium arsenide
Ge - Germanium
InSb - Indium antimonide
Si - Polycrystalline silicon
Si - Silicon (single-crystal, isotropic)
Si - Silicon (single-crystal, anisotropic)
Insulators
Al_2O_3 - Aluminum oxide/Aluminium oxide
SiC (6H) - Silicon carbide
Si_3N_4 - Silicon nitride
SiO_2- Silicon oxide
ZnO - Zinc oxide
Borosilicate
Polymers
Nylon
PDMS - Polydimethylsiloxane
PMMA - Poly methyl methacrylate
Polymide
Polyethylene
PTFE - Polytetrafluoroethylene
PVC - Polyvinyl chloride

Nonlinear Magnetic Materials Database

The Nonlinear Magnetic materials database is included with the AC/DC Module and has properties, such as nonlinear magnetization curves, for a large set of ferromagnetic alloys like various types of steel.

AC/DC Materials Database

MATERIALS
Silicon Steel NGO
35JN200
35PN210, 35PN230, 35PN250, 35PN270, 35PN300, 35PN360, 35PN440
50PN1300, 50PN250, 50PN270, 50PN290, 50PN310, 50PN350, 50PN400, 50PN470, 50PN600, 50PN700, 50PN800
Arnon 5, Arnon 7
M-14, M-22, M-36
Silicon Steel GO
3%

MATERIALS
3408, 3411, 3413, 3423
M-6 Cross, M-6 Rolling
Microsil 4 mil
Silectron 12 mil, Silectron 2 mil, Silectron 4 mil cross, Silectron 4 mil rolling, Silectron 6 mil
Trafoperm N3
Metglas
Nano Finemet 50 Hz NoFieldAnnealed
Nano Finemet 50 Hz TFA
Nano FT3M
Nano Nanocrystalline
Nanocrystalline Vitroperm 50 Hz NFA
Nanocrystalline Vitroperm 50 Hz TFA
Nanocrystalline
Vitroperm 400
Vitroperm 50 Hz LFA
Cobalt Steel
2VPermendur
Cast Cobalt
Cobalt
Supermendur
Vacoflux 17, Vacoflux 50
Vanadium Permendur
Nickel Steel
4750 Cross
4750
Deltamax Oriented
Molypermalloy
Monel Annealed
Monimax, Nonoriented and Monimax, Oriented
Mumetal 77% Ni, Mumetal 80% Ni, Mumetal
Ni 30% Temperature Compensated Alloy
Nickel Annealed
Permalloy Oriented, Permalloy NGO, Permalloy 65% Oriented
Perminvar
Sinimax
Square 50, Square 80
Supermalloy
Superperm 49, Superperm 80
Supersquare 80
Stainless Steel

MATERIALS
405 Annealed, 410 Annealed, 416 Annealed, 430 Annealed, 430F Annealed, 455 Annealed
Chrome 35% Steel
Chromium Stell
Annealed SUS 403, SUS405 Annealed, Annealed TAF
Low Carbon Steel
1002, 1006, 1008, 1010, 1018, 1020, 1030, 1117, 12L14, 50H470
Cold Rolled Annealed Steel, Cold Rolled Low Carbon Strip Steel
D6ac, M-50
Hot Rolled Steel Strip, Magnet Steel, Magnetite, Soft Iron, Steel Forging Annealed, Tungsten Steel, Vacofer S1 Pure Iron, Pure Iron, Annealed
Low Carbon Iron
Pure Iron
Casting
Cast Iron, Nodular
Cast Iron
Cast Steel
Ductile Iron 3% Si
Ductile Iron
Gray Iron Gray Iron, As Cast
Ingot Iron Annealed
Ingot Iron
Malleable Iron Malleable Iron, As Cast
Steel Casting, As Cast
Iron Powder
2 Material, 8 Material
SMP 1171, SMP 1172, SMP 1182, SMP 1192, SMP 1220, SMP 1230, SMP 1321
Vetroferrit
Alloy Powder Core
Amoflux
Hiflux 125 mu, Hiflux 14 mu, Hiflux 147 mu, Hiflux 160 mu, Hiflux 26 mu, Hiflux 60 mu
Koolmu 125 mu, Koolmu 26 mu, Koolmu 40 mu, Koolmu 60 mu, Koolmu 75 mu, Koolmu 90 mu
MPP 125 mu, MPP 14 mu, MPP 147 mu, MPP 160 mu, MPP 173 mu, MPP 200mu, MPP 26 mu, MPP 300 mu, MPP 550 mu, MPP 60 mu
Sendust SuperMSS 26, Sendust SuperMSS 60mu, Sendust SuperMSS
Xflux
Ferrite F3000 mu, Ferrite H150000 mu, Ferrite J5000 mu, Ferrite K Material, Ferrite R 2500 mu, Ferrite R 2300 mu
Ferrite

THIRD PARTY NOTICES

The Nonlinear Magnetic Material Database uses data supplied by the BHmag Database, supplied by Precision Wafers Inc. Copyright © 2013 by Precision Wafers Inc.

All data given in this BHmag database is accurate to the best of the provider's knowledge. It is presented only to assist the user in making informed evaluations and decisions on magnetic materials. No liability is implied, expressed, or accepted by the provider for any consequences in usage of the data. The provider does not assume liability to anyone for use of any implicit or explicit illegal use of any copyrighted material. The provider is also not liable for any loss or damage caused by any error or omission in the data, whether such error or omission is the result of negligence or any other cause. Any and all such liability is disclaimed.

Silectron is a registered trademark of ATI Properties, Inc. Metglas is a registered trademark of Metglas Inc. Super-MSS is a trademark of Micrometals, Inc. Kool Mμ, Xflux, and Amoflux are registered trademarks of Spang & Company. Finemet is a registered trademark of Hitachi Metals Ltd. Trapoferm, Vitroperm, and Vacoflux are registered trademarks and Vacofer is a trademark of Vacuumschmelze GmbH & Co. KG. Monel is a registered trademark of Huntington Alloys Corporation. MuMetal is a registered trademark of Magnetic Shield Corporation. Permalloy is a registered trademark of Marigold Works, LLC. Vetroferrit is a trademark of Von Roll Deutschland GmbH. Microsil, Supersquare 80, Supermendur, Supermalloy, Superperm 80, and Superperm 49 are product names of Magnetic Metals Corporation.

Piezoelectric Materials Database

The Piezoelectric materials database, included in the Acoustics Module, MEMS Module, and Structural Mechanics Module, contains the following materials:

MATERIAL
Barium sodium niobate
Barium titanate
Barium titanate (poled)
Lithium niobate
Lithium tantalate
Lead zirconate titanate (PZT-2), (PZT-4), (PZT-4D), (PZT-5A), (PZT-5H), (PZT-5J), (PZT-7A), and (PZT-8)
Quartz LH (1949 IRE), RH (1949 IRE), LH (1978 IEEE), RH (1978 IEEE)
Rochelle salt
Bismuth germanate
Cadmium sulfide
Gallium arsenide
Tellurium dioxide
Zinc oxide
Zinc sulfide
Ammonium dihydrogen phosphate
Aluminum nitride

All materials define the following material properties needed for piezoelectric modeling:

MATERIAL PROPERTY	DESCRIPTION
c_E	Elasticity matrix
e	Coupling matrix, stress-charge

MATERIAL PROPERTY	DESCRIPTION
ε_{rS}	Relative permittivity, stress-charge
s_E	Compliance matrix
d	Coupling matrix, strain-charge
ε_{rT}	Relative permittivity, strain-charge
ρ	Density

Piezoresistivity Materials Database

The Piezoresistivity materials database is included with the MEMS Module and contains the following materials:

MATERIAL
p-Silicon (single-crystal, lightly doped)
n-Silicon (single-crystal, lightly doped)
p-Silicon (polycrystalline, lightly doped)
n-Silicon (polycrystalline, lightly doped)

All materials define the following material properties needed for modeling the piezoresistance effect:

MATERIAL PROPERTY	DESCRIPTION
D	Elasticity matrix
DVo	Elasticity matrix, Voigt notation
ρ	Density
ε_r	Relative permittivity
σ	Electrical conductivity
Π	Piezoresistive coupling matrix
m_l	Elastoresistive coupling matrix

Both the electrical conductivity and the piezoresistive or elastoresistive coupling matrix are strong functions of the material dopant density. The material models include appropriate functions, although the piezoresistive and elastoresistive matrices scale only with the conductivity, which is appropriate only at lower dopant densities (below approximately 10^{16} cm^{-3}). The low doping level piezoresistance and elastoresistance values are based on those given in Ref. 1. The conductivity is computed from an empirical functional fit to experimental data given in equation 8 of Ref. 2. Data on the piezoresistance properties of Silicon at higher doping levels is available in Ref. 3 and Ref. 4. Because this data does not include all components of the coupling matrix, it is not included in the material models.

The dopant density must be entered for the material as a model input in the piezoresistive or conductive material node. It can be entered as a constant value or as an expression (for example, a spatially varying function could be used).

Optical Materials Database

The Optical materials database is included with the Ray Optics Module and the Wave Optics Module. It contains many optical materials subdivided into these categories: Inorganic Materials, Organic Materials, Glasses, and Miscellaneous Materials. The material properties are frequency-dependent values for the refractive index and its imaginary part. The values are based on data from Ref. 1.

RF Materials Database

The RF materials database is included with the RF Module. It contains a number of substrate materials that assist in modeling RF components. Dielectric properties, like the real part of the relative permittivity and the loss tangent, including the frequency dependence, are included. The database includes material properties from following companies:

- Rogers corporation
- Isola group

Among the materials, the database includes laminates and materials from Rogers Corporation. The laminate and materials trademarks are trademarks or registered trademarks of Rogers Corporation and/or its subsidiaries and joint ventures. All other trademarks are trademarks of their respective companies.

Semiconductor Materials Database

The Semiconductor materials database is included with the Semiconductor Module and contains the materials listed in Table 9-24. The material property groups (including all associated properties) are listed in Table 9-12.

The Silicon material contains parameters for all material property groups, while the other materials contain only the material parameters in the Semiconductor and Basic material groups.

Table 9-12 also gives the references used for the silicon material properties. The material properties for materials other than Silicon are obtained from Ref. 9 and Ref. 10.

TABLE 9-24: SEMICONDUCTOR MODULE MATERIALS DATABASE

MATERIAL
Si - Silicon
Ge - Germanium
GaAs - Gallium arsenide
Al(x)Ga(1-x)As - Aluminum gallium arsenide
GaN (Wurtzite) - Gallium nitride
GaN (Zinc Blende) - Gallium nitride
GaP - Gallium phosphide
GaSb - Gallium antimonide
InAs - Indium arsenide
InP - Indium phosphide
InSb - Indium antimonide

Thermoelectric Materials Database

The Thermoelectric materials database is included with the Heat Transfer Module and contains bismuth telluride (Bi_2Te_3) and lead telluride (PbTe) materials for use with the Thermoelectric Effect interface.

References for the Materials Databases

REFERENCES FOR THE LIQUIDS AND GASES MATERIALS DATABASE

1. *ASHRAE Handbook of Fundamentals*, American Society of Heating, Refrigerating and Air Conditioning Engineers, 1993.

2. E.R.G. Eckert and M. Drake, Jr., *Analysis of Heat and Mass Transfer*, Hemisphere Publishing, 1987.

3. H. Kashiwagi, T. Hashimoto, Y. Tanaka, H. Kubota, and T. Makita, "Thermal Conductivity and Density of Toluene in the Temperature Range 273–373K at Pressures up to 250 MPa", *Int. J. Thermophys.*, vol. 3, no. 3, pp. 201–215, 1982.

4. C.A. Nieto de Castro, S.F.Y. Li, A. Nagashima, R.D. Trengove, and W.A. Wakeham, "Standard Reference Data for the Thermal Conductivity of Liquids", *J. Phys. Chem. Ref. Data*, vol. 15, no. 3, pp. 1073–1086, 1986.

5. B.E. Poling, J.M. Prausnitz, and J.P. O'Connell, *The Properties of Gases and Liquids*, 5th ed., McGraw-Hill, 2001.

6. C.F. Spencer and B.A. Adler, "A Critical Review of Equations for Predicting Saturated Liquid Density," *J. Chem. Eng. Data*, vol. 23, no. 1, pp. 82–88, 1978.

7. N.B.Vargnaftik, *Tables of Thermophysical Properties of Liquids and Gases*, 2nd ed., Hemisphere Publishing, 1975.

8. R.C.Weast (ed.), *CRC Handbook of Chemistry and Physics*, 69th ed., CRC Press, 1988.

9. M. Zabransky and V. Ruzicka, Jr., "Heat Capacity of Liquid n-Heptane Converted to the International Temperature Scale of 1990", *Phys. Chem. Ref. Data*, vol. 23, no. 1, pp. 55–61, 1994.

10. M. Zabransky; V. Ruzicka, Jr.; and E.S. Domalski, "Heat Capacity of Liquids: Critical Review and Recommended Values. Supplement I", *J. Phys. Chem. Ref. Data*, vol. 30, no. 5, pp. 1199–1397, 2002.

11. F.P. Incropera, D.P. DeWitt, T.L. Bergman, and A.S. Lavine, *Fundamentals of Heat and Mass Transfer*, 6th ed., John Wiley & Sons, 2006.

REFERENCES FOR THE MEMS MATERIALS DATABASE

1. J.W. Gardner, V.K. Varadan, and O.O. Awadelkarim, *Microsensors, MEMS, and Smart Devices*, John Wiley & Sons, 2001.

2. D.R. Lide (ed.), *CRC Handbook of Chemistry and Physics*, 84th edition, CRC Press, 2003.

3. A.M. James and M.P. Lord, *MacMillan's Chemical and Physical Data*, MacMillan's Press, 1992.

4. M. Gad-el-Hak (ed.), *The MEMS Handbook*, CRC Press, 2002.

5. *New Semiconductor Materials. Characteristics and Properties*, www.ioffe.ru/SVA/NSM, 2003.

6. *Ceramics WebBook*, https://www.nist.gov/mml/mmsd/webbook, 2003.

7. J.E. Mark, *The Polymer Data Handbook*, 2nd edition, Oxford University Press, 2009.

8. Lotters et. al, "The mechanical properties of the rubber elastic polymer polydimethylsiloxane for sensor applications", *J. Micromech Microeng*, vol. 7 145–147, 1997.

REFERENCES FOR THE PIEZORESISTIVITY MATERIALS DATABASE

1. C.S. Smith, "Piezoresistance Effect in Germanium and Silicon", *Physical Review*, vol. 94, no. 1, pp. 42–49, 1957.

2. C. Jacoboni, C. Canali, G. Ottaviani, and A. Alberigi Quaranta, "A Review of Some Charge Transport Properties of Silicon", *Solid-State Electronics*, vol. 20, pp. 77–89, 1977.

3. O.N. Tufte and E.L. Stelzer, "Piezoresistance Properties of Heavily Doped n-Type Silicon", *Physical Review*, vol. 133, no. 6A, pp. A1705–A1716, 1964.

4. O.N. Tufte and E.L Stelzer, "Piezoresistive Properties of Silicon Diffused Layers", *J. Applied Physics*, vol. 34, no. 2, pp. 313–318, 1963.

REFERENCE FOR THE RAY OPTICS MATERIALS DATABASE

1. *RefractiveIndex.INFO Refractive index database*, refractiveindex.info.

REFERENCES FOR THE SEMICONDUCTOR MATERIALS DATABASE

1. M. Shur, *Physics of Semiconductor Devices*, Prentice Hall, 1990.

2. S. Selberherr, *Analysis and Simulation of Semiconductor Devices*, Springer Verlag, 1984.

3. Y. Okuto and C. R. Crowell, "Threshold energy effect on avalanche breakdown voltage in semiconductor junctions", *Solid State Electronics*, vol. 18, pp. 161–168, 1975.

4. Approximate values are given, based loosely on Ref. 2. In practice these values should depend on the local doping, as discussed in Ref. 2. Use the user-defined option to implement this functionality.

5. N.D. Arora, J.R. Hauser, and D.J. Roulston, "Electron and Hole Mobilities in Silicon as a Function of Concentration and Temperature", *IEEE Transactions on Electron Devices*, vol. 29, no. 2, pp. 292–295, 1982.

6. C. Canali, G. Majni, R. Minder, and G. Ottaviani "Electron and Hole Drift Velocity Measurements in Silicon and Their Empirical Relation to Electric Field and Temperature", *IEEE Transactions on Electron Devices*, vol. 22, no. 11, pp. 1045– 1047, 1975. Note the correction in: G. Ottaviani, "Correction to 'Electron and hole drift velocity measurements in silicon and their empirical relation to electric field and temperatures'", *IEEE Transactions on Electron Devices*, vol. 23, no. 9, pp. 1113, 1976.

7. J.M. Dorkel and Ph. Leturcq, "Carrier Mobilities in Silicon Semi-empirically Related to Temperature, Doping and Injection Level", *Solid-State Electronics*, vol. 24, no. 9, pp. 821–825, 1981.

8. C. Lombardi, S. Manzini, A. Saporito, and M. Vanzi, "A Physically Based Mobility Model for Numerical Simulation of Nonplanar Devices", IEEE Transactions on Computer-Aided Design, vol. 7, no. 11, 1988.

9. M. Levinshtein, S. Rumyantsev, and M. Shur, *Handbook Series on Semiconductor Parameters, Volume 1: Si, Ge, C (Diamond), GaAs, GaP, InAs, InP, InSb*, World Scientific, 2000.

10. M. Levinshtein, S. Rumyantsev, and M. Shur, *Handbook Series on Semiconductor Parameters, Volume II: Ternary and Quaternary III-V compounds*, World Scientific, 2000.

11. D. B. M. Klaassen, J. W. Slotboom, and H. C. de Graaff, "Unified apparent bandgap narrowing in n- and p-type silicon", *Solid State Electron*. vol. 35, no. 2, pp. 125–129, 1992.

12. S.C. Jain and D.J. Roulston, "A simple expression for band gap narrowing (BGN) in heavily doped Si, Ge, GaAs and $Ge_xSi_{1•x}$ strained layers", *Solid-State Electronics*, vol. 34, no. 5, pp. 453–465, 1991.

REFERENCES FOR THE BIOHEAT MATERIALS DATABASE

1. S. Jacques, S. Rastegar, S. Thomsen, and M. Motamedi, "Nonlinear Finite-element Analysis The Role of Dynamic Changes in Blood Perfusion and Optical Properties in Laser Coagulation of Tissue", *IEEE J. Selected Topics in Quantum Electronics*, vol. 2, no. 4, pp. 922–933, 1996.

2. S. Bhowmick, J.E. Coad, D.J. Swanlund, and J.C. Bischof, "In vitro thermal therapy of AT-1 Dunning prostate tumors", *Int. J. Hyperthermia*, vol. 20, no. 1, pp. 73–92, 2004.

3. F. Xu, K.A. Seffen, and T.J. Lu, "Temperature-Dependent Mechanical Behaviors of Skin Tissue", *IAENG Int. J. Computer Science*, vol. 35, no 1, 2008.

4. M. Pop, A. Molckovsky, L. Chin, M.C. Kolios, M.A. Jewett, and M.D. Sherar, "Changes in dielectric properties at 460 kHz of kidney and fat during heating: importance for radio-frequency thermal therapy", *Phys. Med. Biol.*, vol. 48, 2003 (http://www.ncbi.nlm.nih.gov/pubmed/12953912/).

5. P.A. Hasgall, F. Di Gennaro, C. Baumgartner, E. Neufeld, M.C. Gosselin, D. Payne, A. Klingenböck, and N. Kuster, *IT'IS Database for thermal and electromagnetic parameters of biological tissues*, Version 3.0, 2015. www.itis.ethz.ch/database.

6. C. Rossmann and D. Haemmerich, *Review of Temperature Dependence of Thermal Properties, Dielectric Properties, and Perfusion of Biological Tissues at Hyperthermic and Ablation Temperatures*, Critical Reviews in Biomedical Engineering, Vol. 42, pp. 467–492, 2014.

REFERENCES FOR THE BUILDING MATERIALS DATABASE

1. J. Vinha, *Hygrothermal Performance of Timber-Framed External Walls in Finnish Climatic Conditions: A Method for Determining the Sufficient Water Vapour Resistance of the Interior Lining of a Wall Assembly*, PhD Thesis, Tempere University of Technology, 2007.

2. I. Valovirta and J. Vinha, *Water Vapor Permeability and Thermal Conductivity as a Function of Temperature and Relative Humidity*, Performance of Exterior Envelopes of Whole Buildings, IX International Conference, Florida, USA, December 5-10, 2004.

3. H.M. Künzel, S*imultaneous Heat and Moisture Transport in Building Components, One- and two-dimensional calculation using simple parameters*, PhD Thesis, Fraunhofer Institute of Building Physics,1995.

4. C. Abelé et al., *Transferts d'humidité à travers les parois*, Guide technique, CSTB Editions, 2009 (In French).

10

The AC/DC Interfaces

This chapter explains the physics interfaces for modeling electromagnetics, which are found under the **AC/DC** branch ( ). It also contains sections about general fundamentals and theory for electric fields.

In this chapter:

- The Electromagnetics Interfaces
- Fundamentals of Electromagnetics
- Theory of Electrostatics
- Theory of Electric Currents
- Theory of Magnetic Fields
- The Electrostatics Interface
- The Electrostatics Interface
- The Electric Currents Interface
- The Magnetic Fields Interface

The Electromagnetics Interfaces

For simulating electromagnetic fields, COMSOL Multiphysics has three physics interfaces.

With the first two, you can perform static simulations to solve for electric properties:

- Electrostatics
- Electric Currents
- Magnetic Fields

These interfaces are available in all space dimensions.

	For 2D axisymmetric and 2D geometries, you can use the Magnetic Fields interface to perform magnetostatic simulations.

This section begins with a brief introduction to electromagnetics and a definition of the electromagnetic quantities. Then it describes each of the physics interfaces in detail.

	The optional AC/DC Module contains specialized and extended interfaces for electromagnetic simulations, for example, for computations of inductors and capacitors. The optional RF Module includes interfaces for simulating electromagnetic wave propagation that are especially useful in microwave engineering and photonics.

Fundamentals of Electromagnetics

Maxwell's Equations

The problem of electromagnetic analysis on a macroscopic level is that of solving *Maxwell's equations* subject to certain boundary conditions. Maxwell's equations are a set of equations, written in differential or integral form, stating the relationships between the fundamental electromagnetic quantities. These quantities are:

- Electric field intensity $\mathbf{E}$
- Electric displacement or electric flux density $\mathbf{D}$
- Magnetic field intensity $\mathbf{H}$
- Magnetic flux density $\mathbf{B}$
- Current density $\mathbf{J}$
- Electric charge density ρ

The equations can be formulated in differential form or integral form. The differential form is presented here because it leads to differential equations that the finite element method can handle. For general time-varying fields, Maxwell's equations can be written as:

$$\nabla \times \mathbf{H} = \mathbf{J} + \frac{\partial \mathbf{D}}{\partial t}$$
$$\nabla \times \mathbf{E} = -\frac{\partial \mathbf{B}}{\partial t}$$
$$\nabla \cdot \mathbf{D} = \rho$$
$$\nabla \cdot \mathbf{B} = 0$$

The first two equations are also referred to as *Maxwell-Ampère's law* and *Faraday's law*, respectively. Equation three and four are two forms of *Gauss' law*: the electric and magnetic form, respectively.

Another fundamental equation is the *equation of continuity*

$$\nabla \cdot \mathbf{J} = -\frac{\partial \rho}{\partial t}$$

Out of the five equations mentioned, only three are independent. The first two combined with either the electric form of Gauss' law or the equation of continuity form such an independent system.

Constitutive Relations

To obtain a closed system, the equations include *constitutive relations* that describe the macroscopic properties of the medium. They are given as:

$$\begin{aligned} \mathbf{D} &= \varepsilon_0 \mathbf{E} + \mathbf{P} \\ \mathbf{B} &= \mu_0(\mathbf{H} + \mathbf{M}) \\ \mathbf{J} &= \sigma \mathbf{E} \end{aligned} \tag{10-1}$$

where ε_0 is the permittivity of vacuum, μ_0 is the permeability of vacuum, and σ is the electrical conductivity. In the SI units system, the permeability of vacuum is proportional to the dimensionless fine-structure constant and it has an approximate value $4\pi \cdot 10^{-7}$ H/m. The velocity of an electromagnetic wave in a vacuum is given as c_0 and the permittivity of a vacuum is derived from the relation:

$$\varepsilon_0 = \frac{1}{c_0^2\mu_0} \approx 8{,}854 \cdot 10^{-12}\ \text{F/m} \approx \frac{1}{36\pi} \cdot 10^{-9}\ \text{F/m}$$

The electromagnetic constants ε_0, μ_0, and c_0 are available in COMSOL Multiphysics as predefined physical constants.

The *electric polarization vector* $\mathbf{P}$ describes how the material is polarized when an electric field $\mathbf{E}$ is present. It can be interpreted as the volume density of *electric dipole* moments. $\mathbf{P}$ is generally a function of $\mathbf{E}$. Some materials can have a nonzero $\mathbf{P}$ also when there is no electric field present.

The *magnetization vector* $\mathbf{M}$ similarly describes how the material is magnetized when a magnetic field $\mathbf{H}$ is present. It can be interpreted as the volume density of *magnetic dipole* moments. $\mathbf{M}$ is generally a function of $\mathbf{H}$. Permanent magnets, for instance, have a nonzero $\mathbf{M}$ also when there is no magnetic field present.

For linear materials, the polarization is directly proportional to the electric field, $\mathbf{P} = \varepsilon_0\chi_e\mathbf{E}$, where χ_e is the electric susceptibility. Similarly in linear materials, the magnetization is directly proportional to the magnetic field, $\mathbf{M} = \chi_m\mathbf{H}$, where χ_m is the magnetic susceptibility. For such materials, the constitutive relations are:

$$\mathbf{D} = \varepsilon_0(1+\chi_e)\mathbf{E} = \varepsilon_0\varepsilon_r\mathbf{E} = \varepsilon\mathbf{E}$$
$$\mathbf{B} = \mu_0(1+\chi_m)\mathbf{H} = \mu_0\mu_r\mathbf{H} = \mu\mathbf{H}$$

The parameter ε_r is the relative permittivity and μ_r is the relative permeability of the material. Usually these are scalar properties but can, in the general case, be 3-by-3 tensors when the material is anisotropic. The properties ε and μ (without subscripts) are the permittivity and permeability of the material, respectively.

GENERALIZED CONSTITUTIVE RELATIONS

	The Charge Conservation node describes the macroscopic properties of the medium (relating the electric displacement $\mathbf{D}$ with the electric field $\mathbf{E}$) and the applicable material properties.

For nonlinear materials, a generalized form of the constitutive relationships is useful. The relationship used for electric fields is $\mathbf{D} = \varepsilon_0\varepsilon_r\mathbf{E} + \mathbf{D}_r$, where $\mathbf{D}_r$ is the *remanent displacement*, which is the displacement when no electric field is present.

Similarly, a generalized form of the constitutive relation for the magnetic field is

$$\mathbf{B} = \mu_0\mu_r\mathbf{H} + \mathbf{B}_r$$

where $\mathbf{B}_r$ is the *remanent magnetic flux density*, which is the magnetic flux density when no magnetic field is present.

For some materials, there is a nonlinear relationship between $\mathbf{B}$ and $\mathbf{H}$ such that

$$\mathbf{B} = f(|\mathbf{H}|)$$

The relation defining the current density is generalized by introducing an externally generated current $\mathbf{J}_e$. The resulting constitutive relation is $\mathbf{J} = \sigma\mathbf{E} + \mathbf{J}_e$.

Potentials

Under certain circumstances, it can be helpful to formulate the problems in terms of the electric scalar potential V and the magnetic vector potential $\mathbf{A}$. They are given by the equalities:

$$\mathbf{B} = \nabla \times \mathbf{A}$$
$$\mathbf{E} = -\nabla V - \frac{\partial \mathbf{A}}{\partial t}$$

The defining equation for the magnetic vector potential is a direct consequence of the magnetic Gauss' law. The electric potential results from Faraday's law.

Material Properties

Until now, there has only been a formal introduction of the constitutive relations. These seemingly simple relations can be quite complicated at times. There are four main groups of materials for which they require some consideration. A given material can belong to one or more of these groups.

Inhomogeneous Materials Inhomogeneous materials are the least complicated. An inhomogeneous medium is one in which the constitutive parameters vary with the space coordinates so that different field properties prevail at different parts of the material structure.

Anisotropic Materials For anisotropic materials, the field relationships at any point differ for different directions of propagation. This means that a 3-by-3 tensor is necessary to properly define the constitutive relationships. If this tensor is symmetric, the material is often referred to as *reciprocal*. In such cases, rotate the coordinate system such that a diagonal matrix results. If two of the diagonal entries are equal, the material is *uniaxially anisotropic*. If none of the elements have the same value, the material is *biaxially anisotropic* (Ref. 2). Anisotropic parameters are needed, for example, to examine permittivity in crystals (Ref. 2) and when working with conductivity in solenoids.

Nonlinear Materials Nonlinearity is the effect of variations in permittivity or permeability with the intensity of the electromagnetic field. Nonlinearity also includes hysteresis effects, where not only the current field intensities influence the physical properties of the material, but also the history of the field distribution.

Dispersive Materials Dispersion describes changes in a wave's velocity with wavelength. In the frequency domain, dispersion is expressed with a frequency dependence of the constitutive laws.

About the Boundary and Physics Interface Conditions

To get a full description of an electromagnetics problem, boundary conditions must be specified at material interfaces and physical boundaries. At interfaces between two media, the boundary conditions can be expressed mathematically as

$$\mathbf{n}_2 \times (\mathbf{E}_1 - \mathbf{E}_2) = \mathbf{0}$$
$$\mathbf{n}_2 \cdot (\mathbf{D}_1 - \mathbf{D}_2) = \rho_s$$
$$\mathbf{n}_2 \times (\mathbf{H}_1 - \mathbf{H}_2) = \mathbf{J}_s$$
$$\mathbf{n}_2 \cdot (\mathbf{B}_1 - \mathbf{B}_2) = 0$$

where ρ_s and $\mathbf{J}_s$ denote surface charge density and surface current density, respectively, and $\mathbf{n}_2$ is the outward normal from medium two. Of these four conditions, only two are independent. This is an overdetermined system of equations, so it needs to be reduced. First select either equation one or equation four. Then select either equation two or equation three. Together these selections form a set of two independent conditions.

From these relationships, the interface condition is derived for the current density,

$$\mathbf{n}_2 \cdot (\mathbf{J}_1 - \mathbf{J}_2) = -\frac{\partial \rho_s}{\partial t}$$

INTERFACE BETWEEN A DIELECTRIC AND A PERFECT CONDUCTOR

A perfect conductor has infinite electrical conductivity and thus no internal electric field. Otherwise, it would produce an infinite current density according to the third fundamental constitutive relation. At an interface between a dielectric and a perfect conductor, the boundary conditions for the **E** and **D** fields are simplified. Assume that subscript 1 corresponds to a perfect conductor; then $\mathbf{D}_1 = \mathbf{0}$ and $\mathbf{E}_1 = \mathbf{0}$ in the relationships just given. If it is a time-varying case, then $\mathbf{B}_1 = \mathbf{0}$ and $\mathbf{H}_1 = \mathbf{0}$ as well, as a consequence of Maxwell's equations. The result is the following set of boundary conditions for the fields in the dielectric medium for the time-varying case:

$$\begin{aligned} -\mathbf{n}_2 \times \mathbf{E}_2 &= 0 \\ -\mathbf{n}_2 \times \mathbf{H}_2 &= \mathbf{J}_s \\ -\mathbf{n}_2 \cdot \mathbf{D}_2 &= \rho_s \\ -\mathbf{n}_2 \cdot \mathbf{B}_2 &= 0 \end{aligned}$$

Phasors

Whenever a problem is time-harmonic the fields can be written in the form:

$$E(\mathbf{r}, t) = \hat{E}(\mathbf{r})\cos(\omega t + \phi)$$

Instead of using a cosine function for the time dependence, it is more convenient to use an exponential function, by writing the field as:

$$E(\mathbf{r}, t) = \hat{E}(\mathbf{r})\cos(\omega t + \phi) = \mathrm{Re}(\hat{E}(\mathbf{r})e^{j\phi}e^{j\omega t}) = \mathrm{Re}(\tilde{E}(\mathbf{r})e^{j\omega t})$$

The field $\tilde{E}(\mathbf{r})$ is a *phasor*, which contains amplitude and phase information of the field but is independent of t. One thing that makes the use of phasors suitable is that a time derivative corresponds to a multiplication by $j\omega$,

$$\frac{\partial E}{\partial t} = \mathrm{Re}(j\omega\tilde{E}(\mathbf{r})e^{j\omega t})$$

If the fields satisfy a linear time-dependent equation, then the corresponding phasors must satisfy a similar equation in which the time derivatives are replaced by a factor $j\omega$. All time-harmonic equations in the AC/DC Module are expressed as equations for the phasors. (The tilde is dropped from the variable denoting the phasor.)

The frequency domain formulation is only applicable for equations linear in the fields. In particular, it cannot be used with materials whose properties depend on the fields themselves (nonlinear materials). See Effective Nonlinear Magnetic Constitutive Relations for a formulation that approximates nonlinear magnetic constitutive relations in time-harmonic problems.

!	When analyzing the solution of a time-harmonic equation, it is important to remember that the field that has been calculated is a phasor and not a physical field. For example, all plot functions visualize $\mathrm{Re}(\tilde{E}(\mathbf{r}))$ by default, which is E at time $t = 0$. To obtain the solution at a given time, specify a phase factor in all results pages and in the corresponding functions.

Effective Nonlinear Magnetic Constitutive Relations

The effective constitutive relations can be used to approximate the behavior of a nonlinear magnetic material, such as a saturable material, in a (linear) Frequency Domain study.

The approach consists in replacing the nonlinear material with an inhomogeneous linear material — a material described by a magnetic permeability constant in time but which can be space dependent. The local magnetic permeability is chosen using an approximation criterion, such as, for example, that the cycle-average energy stored must be equal to the nonlinear case. As a consequence, the permeability may depend on the amplitude of the magnetic field and the nonlinear solver is invoked during the solution.

The formulation still applies the assumption of harmonic time dependency of the fields (which are still described as phasors): the fields still oscillate at the given frequency; higher-order harmonic effects, or other similar effects due to the nonlinearity, are not accounted for.

Using this constitutive relation provides a better approximation of the behavior of a nonlinear material in the frequency domain than linearizing the material properties, still avoiding the computational cost of a full transient analysis.

The application Effective Nonlinear Magnetic Curves Calculator in the AC/DC Module Application Library can be used to compute the effective B-H or H-B curve for a material, starting from its B-H or H-B curve.

Electromagnetic Forces

The Magnetic Field interface contains a predefined domain-level variable for calculating the Lorentz force, which gives the force distribution exerted on a current-carrying conductor placed in magnetic flux density $\mathbf{B}$. The Lorentz force is defined as $\mathbf{F} = \mathbf{J} \times \mathbf{B}$.

The Lorentz force gives very good accuracy for electromagnetic force calculations in conducting domains. For nonconducting domains, use a more general method — integrating the Maxwell stress tensor variables over the boundaries of the object for which to calculate the total force. The Maxwell surface stress tensor is available as a boundary variable.

References for Electromagnetic Theory

1. D.K. Cheng, *Field and Wave Electromagnetics*, Addison-Wesley, Reading, Massachusetts, 1989.

2. J. Jin, *The Finite Element Method in Electromagnetics*, John Wiley & Sons, New York, 1993.

3. B.D. Popovic, *Introductory Engineering Electromagnetics*, Addison-Wesley, Reading, Massachusetts, 1971.

4. A.J. Bergqvist, "A Simple Vector Generalization of the Jiles-Atherton Model of Hysteresis," *IEEE Transactions on Magnetics*, vol. 32, no. 5, pp. 4213–4215, 1996.

5. J. P. A. Bastos and N. Sadowski, *Magnetic Materials and 3D Finite Element Modeling*, CRC Press 2014.

Theory of Electrostatics

The Electrostatics Interface is available for 3D, 2D in-plane, and 2D axisymmetric components. Applications with electrostatic equations include high-voltage apparatus, electronic devices, and capacitors. The term "statics" is not to be interpreted literally — it is the observation time, or time scale at which the applied excitation changes, that is short compared to the charge relaxation time; also, the electromagnetic wavelength and skin depth are very large compared to the size of the domain of interest.

If you do not know whether to use the Electric Currents or the Electrostatics interface, which both solve for the scalar electric potential V, consider using an explicit charge transport model. See Charge Relaxation Theory.

Charge Relaxation Theory

COMSOL Multiphysics includes physics interfaces for the modeling of static electric fields and currents. Deciding what specific physics interface and study type to select for a particular modeling situation requires a basic understanding of the charge dynamics in conductors.

Physics interfaces for the modeling of dynamic, quasi-static (that is, without including wave propagation effects) electric fields and currents are available with the AC/DC Module and MEMS Module.

The different physics interfaces involving only the scalar electric potential can be interpreted in terms of the charge relaxation process. The fundamental equations involved are *Ohm's law* for the conduction current density

$$\mathbf{J}_c = \sigma \mathbf{E}$$

the *equation of continuity*

$$\frac{\partial \rho}{\partial t} + \nabla \cdot \mathbf{J}_c = 0$$

and *Gauss' law*

$$\nabla \cdot (\varepsilon \mathbf{E}) = \rho$$

By combining these, one can deduce the following differential equation for the space charge density in a homogeneous medium

$$\frac{\partial \rho}{\partial t} + \frac{\sigma}{\varepsilon}\rho = 0$$

This equation has the solution

$$\rho(t) = \rho_0 e^{-t/\tau}$$

where

$$\tau = \frac{\varepsilon}{\sigma}$$

is called the charge relaxation time. For a good conductor like copper, τ is of the order of 10^{-19} s, whereas for a good insulator like silica glass, it is of the order of 10^3 s. For a pure insulator, it becomes infinite.

When modeling real-world devices, there is not only the *intrinsic time scale* of the charge relaxation time but also an *external time scale* t at which a device is energized or the observation time. It is the relation between the

external time scale and the charge relaxation time that determines what physics interface and study type to use. The results are summarized in Table 10-1 below,

TABLE 10-1: SUITABLE PHYSICS INTERFACE AND STUDY TYPE FOR DIFFERENT TIME-SCALE REGIMES.

CASE	PHYSICS INTERFACE	STUDY TYPE
$\tau >> t$	Electrostatics	Stationary
$\tau << t$	Electric Currents	Stationary
$\tau \sim t$	Electric Currents	Time Dependent or, with the AC/DC Module, MEMS Module, or Semiconductor Module, Frequency Domain

FIRST CASE: $\tau >> T$

If the external time scale is short compared to the charge relaxation time, the charges do not have time to redistribute to any significant degree. Thus the charge distribution can be considered as a given model input. The best approach is to solve the Electrostatics formulation using the electric potential V.

By combining the definition of the potential with Gauss' law, you can derive the classical Poisson's equation. Under static conditions, the electric potential V is defined by the equivalence $\mathbf{E} = -\nabla V$. Using this together with the constitutive relation $\mathbf{D} = \varepsilon_0\mathbf{E} + \mathbf{P}$ between $\mathbf{D}$ and $\mathbf{E}$, you can rewrite Gauss' law as a variant of Poisson's equation

$$-\nabla \cdot (\varepsilon_0 \nabla V - \mathbf{P}) = \rho$$

This equation is used in the Electrostatics interface. It is worth noting that Gauss' law does not require the charge distribution to be static. Thus, provided dynamics are slow enough that induced electric fields can be neglected and hence a scalar electric potential is justified, the formulation can be used also in the Time Dependent study type. That typically involves either prescribing the charge dynamics or coupling a separate formulation for this.

	Such separate charge transport formulations can be found in the Plasma Module, the Semiconductor Module, and the Chemical Reaction Engineering Module.

SECOND CASE: $\tau << T$

If the external time scale is long compared to the charge relaxation time, the stationary solution to the equation of continuity has been reached. In a stationary coordinate system, a slightly more general form of Ohm's law than above states that

$$\mathbf{J}_c = \sigma\mathbf{E} + \mathbf{J}_e$$

where $\mathbf{J}_e$ is an externally generated current density. The static form of the equation of continuity then reads

$$\nabla \cdot \mathbf{J}_c = -\nabla \cdot (\sigma \nabla V - \mathbf{J}_e) = 0$$

To handle current sources, the equation can be generalized to

$$-\nabla \cdot (\sigma \nabla V - \mathbf{J}_e) = Q_j$$

This equation is used in the static study type for the Electric Currents interface.

Electrostatics Equations

Under static conditions, the electric potential, V, is defined by the relationship:

$$\mathbf{E} = -\nabla V$$

Combining this equation with the constitutive relationship $\mathbf{D} = \varepsilon_0\mathbf{E} + \mathbf{P}$ between the electric displacement $\mathbf{D}$ and the electric field $\mathbf{E}$, it is possible to represent Gauss' law as the following equation:

$$-\nabla \cdot (\varepsilon_0 \nabla V - \mathbf{P}) = \rho$$

In this equation, the physical constant, ε_0 (SI unit: F/m) is the permittivity of vacuum, $\mathbf{P}$ (SI unit: C/m^2) is the electric polarization vector, and ρ (SI unit: C/m^3) is a space charge density. This equation describes the electrostatic field in dielectric materials.

For in-plane 2D modeling, the Electrostatics interface assumes a symmetry where the electric potential varies only in the x and y directions and is constant in the z direction. This implies that the electric field, $\mathbf{E}$, is tangential to the xy-plane. With this symmetry, the same equation is solved as in the 3D case. The physics interface solves the following equation where d is the thickness in the z direction:

$$-\nabla \cdot d(\varepsilon_0 \nabla V - \mathbf{P}) = \rho$$

The axisymmetric version of the physics interface considers the situation where the fields and geometry are axially symmetric. In this case, the electric potential is constant in the φ direction, which implies that the electric field is tangential to the rz-plane.

The Electrostatics Interface in Time Dependent or Frequency Domain Studies

The Electrostatics Interface can also be solved in a dynamic study (Time Dependent or Frequency Domain). The equation system solved, however, is typically always the one presented in the previous section for the stationary case, in which no transient electromagnetic effects are taken into account. The difference is that the sources of the problem (charge densities, electric potential) are assumed to be time-varying (in a Time Dependent study) or time-harmonic (in a Frequency Domain study).

The support for dynamic studies simplifies the coupling of the Electrostatics interface with other physics interfaces. Using the physics interface in a dynamic study is a valid approximation only if the time-scale (or the frequency) of the study is so slow that transient electromagnetic effects can be neglected; for example, in acoustic or structural problems.

The Electrostatics interface also supports the small-signal analysis study sequence, which can be used when a time-harmonic perturbation is superposed on a static bias charge or voltage.

Theory of Electric Currents

The Electric Currents Interface solves a current conservation problem for the scalar electric potential V and is available for 3D, 2D in-plane, and 2D axisymmetric components. Electrolysis and the computation of resistances of grounding plates are examples that involve conductive media with electrical conductivities and electric currents. If you are uncertain of whether to use the Electric Currents or the Electrostatics interface, which both solve for the scalar electric potential V, refer to the section on Charge Relaxation Theory.

Electric Currents Equations in Steady State

When handling stationary electric currents in conductive media you must consider the stationary equation of continuity. In a stationary coordinate system, the point form of *Ohm's law* states that:

$$\mathbf{J} = \sigma\mathbf{E} + \mathbf{J}_{\mathrm{e}}$$

where σ is the electrical conductivity (SI unit: S/m), and $\mathbf{J}_{\mathrm{e}}$ is an externally generated current density (SI unit: A/m^2). The static form of the equation of continuity then states:

$$\nabla \cdot \mathbf{J} = -\nabla \cdot (\sigma\nabla V - \mathbf{J}_{\mathrm{e}}) = 0$$

To handle current sources, you can generalize the equation to:

$$-\nabla \cdot (\sigma\nabla V - \mathbf{J}_{\mathrm{e}}) = Q_j$$

In planar 2D the Electric Currents interface assumes that the model has a symmetry where the electric potential varies only in the x and y directions and is constant in the z direction. This implies that the electric field, $\mathbf{E}$, is tangential to the xy-plane. The Electric Currents interface then solves the following equation, where d is the thickness in the z direction:

$$-\nabla \cdot d(\sigma\nabla V - \mathbf{J}_{\mathrm{e}}) = dQ_j \tag{10-2}$$

In 2D axisymmetry, the Electric Currents interface considers the situation where the fields and geometry are axially symmetric. In this case, the electric potential is constant in the φ direction, which implies that the electric field is tangential to the rz-plane.

Theory of Magnetic Fields

Simulation of magnetic fields is of interest when studying magnets, motors, transformers, and conductors carrying static or alternating currents.

The Magnetic Fields Interface is used for 3D, 2D in-plane, and 2D axisymmetric components. Unless you have a license for the AC/DC Module, only 2D components involving out-of-plane currents and axisymmetric components involving azimuthal currents are supported.

	For a deeper theoretical background to the magnetic vector potential used, see the section starting with Maxwell's Equations.

In this section:

- Magnetostatics Equation
- Frequency Domain Equation
- Transient Equation
- Maxwell's Equations
- Magnetic and Electric Potentials
- Gauge Transformations
- Selecting a Particular Gauge
- The Gauge and Equation of Continuity for Dynamic Fields
- Time-Harmonic Magnetic Fields

Magnetostatics Equation

To derive the magnetostatic equation, start with Ampère's law for static cases $\nabla \times \mathbf{H} = \mathbf{J}$. The current is

$$\mathbf{J} = \sigma \mathbf{v} \times \mathbf{B} + \mathbf{J}_e$$

where $\mathbf{J}_e$ is an externally generated current density, and $\mathbf{v}$ is the velocity of the conductor.

Using the definitions of magnetic potential, $\mathbf{B} = \nabla \times \mathbf{A}$ and the constitutive relationship, $\mathbf{B} = \mu_0(\mathbf{H} + \mathbf{M})$, rewrite Ampère's law as

$$\nabla \times (\mu_0^{-1} \nabla \times \mathbf{A} - \mathbf{M}) - \sigma \mathbf{v} \times (\nabla \times \mathbf{A}) = \mathbf{J}_e$$

which is the equation used in magnetostatics.

Frequency Domain Equation

To derive the time harmonic equation this physics interface solves, start with Ampère's law including displacement currents (then called Maxwell-Ampère's law), as these do not involve any extra computational cost in the frequency domain,

$$\nabla \times \mathbf{H} = \mathbf{J} + \frac{\partial \mathbf{D}}{\partial t} = \sigma \mathbf{E} + \sigma \mathbf{v} \times \mathbf{B} + \mathbf{J}_e + \frac{\partial \mathbf{D}}{\partial t}$$

Now assume time-harmonic fields and use the definitions of the fields,

$$\mathbf{B} = \nabla \times \mathbf{A}$$
$$\mathbf{E} = -j\omega\mathbf{A}$$

and combine them with the constitutive relationships $\mathbf{B} = \mu_0(\mathbf{H} + \mathbf{M})$ and $\mathbf{D} = \varepsilon_0\mathbf{E}$ to rewrite Ampère's law as

$$(j\omega\sigma - \omega^2\varepsilon_0)\mathbf{A} + \nabla \times (\mu_0^{-1}\nabla \times \mathbf{A} - \mathbf{M}) - \sigma\mathbf{v} \times (\nabla \times \mathbf{A}) = \mathbf{J}_e$$

Transient Equation

The transient equation this physics interface solves is Ampère's law, illustrated here with the constitutive relation $\mathbf{B} = \mu_0(\mathbf{H} + \mathbf{M})$.

$$\sigma\frac{\partial\mathbf{A}}{\partial t} + \nabla \times (\mu_0^{-1}\nabla \times \mathbf{A} - \mathbf{M}) - \sigma\mathbf{v} \times (\nabla \times \mathbf{A}) = \mathbf{J}_\mathrm{e}$$

Maxwell's Equations

Quasi-static analysis of magnetic and electric fields is valid under the assumption that $\partial\mathbf{D}/\partial t = 0$.

This implies that it is possible to rewrite Maxwell's equations in the following manner:

$$\nabla \times \mathbf{H} = \mathbf{J} = \sigma(\mathbf{E} + \mathbf{v} \times \mathbf{B}) + \mathbf{J}_\mathrm{e}$$
$$\nabla \times \mathbf{E} = -\frac{\partial\mathbf{B}}{\partial t}$$
$$\nabla \cdot \mathbf{B} = 0$$
$$\nabla \cdot \mathbf{D} = \rho$$
$$\nabla \cdot \mathbf{J} = 0$$

Here $\mathbf{J}_\mathrm{e}$ is an externally generated current density and $\mathbf{v}$ is the velocity of the conductor. The crucial criterion for the quasi-static approximation to be valid is that the currents and electromagnetic fields vary slowly. This means that the dimensions of the structure in the problem need to be small compared to the wavelength.

Magnetic and Electric Potentials

Using the definitions of the potentials,

$$\mathbf{B} = \nabla \times \mathbf{A}$$
$$\mathbf{E} = -\nabla V - \frac{\partial\mathbf{A}}{\partial t}$$

and the constitutive relation $\mathbf{B} = \mu_0(\mathbf{H} + \mathbf{M})$, Ampère's law can be rewritten as

$$\sigma\frac{\partial\mathbf{A}}{\partial t} + \nabla \times (\mu_0^{-1}\nabla \times \mathbf{A} - \mathbf{M}) - \sigma\mathbf{v} \times (\nabla \times \mathbf{A}) + \sigma\nabla V = \mathbf{J}_\mathrm{e} \tag{10-3}$$

The equation of continuity, which is obtained by taking the divergence of the above equation, adds the following equation:

$$\nabla \cdot \left(-\sigma\frac{\partial\mathbf{A}}{\partial t} + \sigma\mathbf{v} \times (\nabla \times \mathbf{A}) - \sigma\nabla V + \mathbf{J}_\mathrm{e}\right) = 0 \tag{10-4}$$

Equation 10-3 and Equation 10-4 form a system of equations for the two potentials $\mathbf{A}$ and V.

Gauge Transformations

The electric and magnetic potentials are not uniquely defined from the electric and magnetic fields through

$$\mathbf{E} = -\frac{\partial \mathbf{A}}{\partial t} - \nabla V$$
$$\mathbf{B} = \nabla \times \mathbf{A}$$

Introducing two new potentials

$$\tilde{\mathbf{A}} = \mathbf{A} + \nabla \Psi$$
$$\tilde{V} = V - \frac{\partial \Psi}{\partial t}$$

gives the same electric and magnetic fields:

$$\mathbf{E} = -\frac{\partial \mathbf{A}}{\partial t} - \nabla V = -\frac{\partial(\tilde{\mathbf{A}} - \nabla \Psi)}{\partial t} - \nabla\left(\tilde{V} + \frac{\partial \Psi}{\partial t}\right) = -\frac{\partial \tilde{\mathbf{A}}}{\partial t} - \nabla \tilde{V}$$
$$\mathbf{B} = \nabla \times \mathbf{A} = \nabla \times (\tilde{\mathbf{A}} - \nabla \Psi) = \nabla \times \tilde{\mathbf{A}}$$

The variable transformation of the potentials is called a *gauge transformation*. To obtain a unique solution, choose the gauge — that is, put constraints on Ψ that make the solution unique. Another way of expressing this additional condition is to put a constraint on $\nabla \cdot \mathbf{A}$. A vector field is uniquely defined up to a constant if both $\nabla \cdot \mathbf{A}$ and $\nabla \times \mathbf{A}$ are given. This is called *Helmholtz's theorem*.

One particular gauge is the *Coulomb gauge* given by the constraint: $\nabla \cdot \mathbf{A} = 0$.

Selecting a Particular Gauge

It is important to observe that in the dynamic case, $\mathbf{A}$ and V are coupled via the selected gauge. For a dynamic formulation, it is also possible to select a Ψ such that the scalar electric potential vanishes and only the magnetic vector potential has to be considered. The dynamic formulations (Frequency Domain and Time Dependent study types) of the Magnetic Fields interface are operated in this gauge as it involves only $\mathbf{A}$. In the static limit, $\mathbf{A}$ and V are not coupled via the gauge selection and thus any gauge can be chosen for $\mathbf{A}$ when performing magnetostatic modeling.

The Gauge and Equation of Continuity for Dynamic Fields

After eliminating the electric potential by choosing the appropriate gauge and disregarding the velocity term, the equation of continuity obtained by taking the divergence of Ampère's law reads:

$$\nabla \cdot \left(-\sigma \frac{\partial \mathbf{A}}{\partial t} + \mathbf{J}_{\mathrm{e}}\right) = 0$$

It is clear that unless the electrical conductivity is uniform, the particular gauge used to eliminate V cannot be the Coulomb gauge as that would violate the equation of continuity and would thereby also violate Ampère's law.

Time-Harmonic Magnetic Fields

In the time-harmonic case, there is no computational cost for including the displacement current in Ampère's law (then called Maxwell-Ampère's law):

$$\nabla \times \mathbf{H} = \mathbf{J} = \sigma(\mathbf{E} + \mathbf{v} \times \mathbf{B}) + (j\omega \mathbf{D} + \mathbf{J}_e)$$

In the transient case, the inclusion of this term leads to a second-order equation in time, but in the harmonic case there are no such complications. Using the definition of the electric and magnetic potentials, the system of equations becomes:

$$-\nabla \cdot ((j\omega\sigma - \omega^2\varepsilon_0)\mathbf{A} - \sigma\mathbf{v} \times (\nabla \times \mathbf{A}) + (\sigma + j\omega\varepsilon_0)\nabla V - (\mathbf{J}_e + j\omega\mathbf{P})) = 0$$

$$(j\omega\sigma - \omega^2\varepsilon_0)\mathbf{A} + \nabla \times (\mu_0^{-1}\nabla \times \mathbf{A} - \mathbf{M}) - \sigma\mathbf{v} \times (\nabla \times \mathbf{A}) + (\sigma + j\omega\varepsilon_0)\nabla V = \mathbf{J}_e + j\omega\mathbf{P}$$

The constitutive relation $\mathbf{D} = \varepsilon_0\mathbf{E} + \mathbf{P}$ has been used for the electric field.

To obtain a particular gauge that reduces the system of equation, choose $\Psi = -jV/\omega$ in the gauge transformation. This gives:

$$\tilde{\mathbf{A}} = \mathbf{A} - \frac{j}{\omega}\nabla V \qquad \tilde{V} = 0$$

When $\tilde{V}$ vanishes from the equations, only the second one is needed,

$$(j\omega\sigma - \omega^2\varepsilon_0)\tilde{\mathbf{A}} + \nabla \times (\mu_0^{-1}\nabla \times \tilde{\mathbf{A}} - \mathbf{M}) - \sigma\mathbf{v} \times (\nabla \times \tilde{\mathbf{A}}) = \mathbf{J}_e + j\omega\mathbf{P}$$

Working with $\tilde{\mathbf{A}}$ is often the best option when it is possible to specify all source currents as external currents $\mathbf{J}_e$ or as surface currents on boundaries.

The Electrostatics Interface

The **Electrostatics (es)** interface ( ), found under the **AC/DC>Electric Fields and Currents** branch when adding a physics interface, is used to compute the electric field, electric displacement field, and potential distributions in dielectrics under conditions where the electric charge distribution is explicitly prescribed. The formulation is stationary except for use together with other physics interfaces. Eigenfrequency, frequency-domain, small-signal analysis, and time-domain modeling are supported in all space dimensions.

The physics interface solves Gauss' Law for the electric field using the scalar electric potential as the dependent variable.

Charge Conservation is the main node, which adds the equation for the electric potential and has a Settings window for defining the constitutive relation for the electric displacement field and its associated properties such as the relative permittivity.

When this physics interface is added, these default nodes are also added to the **Model Builder** — **Charge Conservation**, **Zero Charge** (the default boundary condition), and **Initial Values**. Then, from the **Physics** toolbar, add other nodes that implement, for example, boundary conditions and space charges. You can also right-click **Electrostatics** to select physics features from the context menu.

Physics-Controlled Mesh

The physics-controlled mesh is controlled from the **Mesh** node's **Settings** window (if the **Sequence type** is **Physics-controlled mesh**). There, in the table in the **Physics-Controlled Mesh** section, find the physics interface in the **Contributor** column and select or clear the check box in the **Use** column on the same table row for enabling (the default) or disabling contributions from the physics interface to the physics-controlled mesh.

Information from the physics, such as the presence of an infinite elements domain or periodic condition, will be used to automatically set up an appropriate mesh sequence.

!	In the *COMSOL Multiphysics Reference Manual* see the Physics-Controlled Mesh section for more information about how to define the physics-controlled mesh.

SETTINGS

The **Label** is the default physics interface name.

The **Name** is used primarily as a scope prefix for variables defined by the physics interface. Refer to such physics interface variables in expressions using the pattern `<name>.<variable_name>`. In order to distinguish between variables belonging to different physics interfaces, the `name` string must be unique. Only letters, numbers, and underscores (_) are permitted in the **Name** field. The first character must be a letter.

The default **Name** (for the first physics interface in the model) is `es`.

CROSS-SECTION AREA (1D COMPONENTS)

For 1D components, enter a default value for the **Cross-section area** A (SI unit: m^2). The default value of 1 is typically not representative for a thin domain. Instead it describes a unit thickness that makes the 1D equation identical to the equation used for 3D components. See also Change Cross Section.

THICKNESS (2D COMPONENTS)

For 2D components, enter a default value for the **Out-of-plane thickness** d (SI unit: m). The default value of 1 is typically not representative for a thin dielectric medium, for example. Instead it describes a unit thickness that makes the 2D equation identical to the equation used for 3D components. See also Change Thickness (Out-of-Plane).

DEPENDENT VARIABLES

The dependent variable is the **Electric potential** V. You can change its name, which changes both the field name and the variable name. If the new name coincides with the name of another electric potential field in the model, the physics interfaces shares degrees of freedom. The new name must not coincide with the name of a field of another type or with a component name belonging to some other field.

DISCRETIZATION

!	In the *COMSOL Multiphysics Reference Manual*, see Table 2-4 for links to common sections and Table 2-5 to common feature nodes. You can also search for information: press F1 to open the **Help** window or Ctrl+F1 to open the **Documentation** window.

	• Domain, Boundary, Edge, Point, and Pair Nodes for the Electrostatics Interface • Theory of Electrostatics

	Electric Sensor: Application Library path **COMSOL_Multiphysics/Electromagnetics/electric_sensor**

Domain, Boundary, Edge, Point, and Pair Nodes for the Electrostatics Interface

The Electrostatics interface has these domain, boundary, edge, point, and pair nodes available.

ABOUT THE BOUNDARY CONDITIONS

The relevant physics interface condition at interfaces between different media is

$$\mathbf{n}_2 \cdot (\mathbf{D}_1 - \mathbf{D}_2) = \rho_s$$

In the absence of surface charges, this condition is fulfilled by the natural boundary condition

$$\mathbf{n} \cdot [(\varepsilon_0 \nabla V - \mathbf{P})_1 - (\varepsilon_0 \nabla V - \mathbf{P})_2] = -\mathbf{n} \cdot (\mathbf{D}_1 - \mathbf{D}_2) = 0$$

AVAILABLE NODES

These nodes, listed in alphabetical order, are available from the **Physics** ribbon toolbar (Windows users), **Physics** context menu (Mac or Linux users), or right-click to access the context menu (all users). Also see Table 10-2 for a list of interior and exterior boundary conditions, including edge, point, and pair availability.

	In general, to add a node, go to the **Physics** toolbar no matter what operating system you are using. Subnodes are available by clicking the parent node and selecting it from the **Attributes** menu.

- Change Cross Section
- Change Thickness (Out-of-Plane)
- Charge Conservation
- Charge Conservation, Piezoelectric[1]
- Electric Displacement Field
- Electric Potential
- External Surface Charge Accumulation
- Ground
- Initial Values
- Line Charge
- Line Charge (on Axis)
- Line Charge (Out-of-Plane)
- Periodic Condition
- Point Charge
- Point Charge (on Axis)
- Space Charge Density
- Surface Charge Density
- Thin Low Permittivity Gap
- Zero Charge (the default boundary condition)

[1] This feature is available with the Piezoelectricity interface, which requires the Acoustics Module, MEMS Module, or the Structural Mechanics Module.

Table 10-2 lists the interior and exterior boundary conditions available with this physics interface. It also includes edge, point, and pair availability.

TABLE 10-2: INTERIOR AND EXTERIOR BOUNDARY CONDITIONS (INCLUDING EDGE, POINT, AND PAIR AVAILABILITY) FOR THE ELECTROSTATICS INTERFACE

NODE	INTERIOR	EXTERIOR	ALSO AVAILABLE FOR
Change Cross Section	x	x	pairs
Change Thickness (Out-of-Plane)	x	x	pairs
Electric Displacement Field	x	x	pairs
Electric Potential	x	x	edges, points, and pairs
External Surface Charge Accumulation		x	pairs
Ground	x	x	edges, points, and pairs
Periodic Condition		x	not applicable
Surface Charge Density	x	x	pairs
Thin Low Permittivity Gap	x		not applicable
Zero Charge (the default)	x	x	pairs

For axisymmetric components, COMSOL Multiphysics takes the axial symmetry boundaries (at $r = 0$) into account and automatically adds an **Axial Symmetry** node to the model that is valid on the axial symmetry boundaries only. There are also **Line Charge (on Axis)** and **Point Charge (on Axis)** available.

In the *COMSOL Multiphysics Reference Manual*, see Table 2-4 for links to common sections and Table 2-5 to common feature nodes. You can also search for information: press F1 to open the **Help** window or Ctrl+F1 to open the **Documentation** window.

Charge Conservation

The **Charge Conservation** node adds the equations for charge conservation according to Gauss' law for the electric displacement field. It provides an interface for defining the constitutive relation and its associated properties such as the relative permittivity.

MATERIAL TYPE

The **Material type** setting decides how materials behave and how material properties are interpreted when the mesh is deformed. Select **Solid** for materials whose properties change as functions of material strain, material orientation, and other variables evaluated in a material reference configuration (material frame). Select **Nonsolid** for materials whose properties are defined only as functions of the current local state at each point in the spatial frame, and for which no unique material reference configuration can be defined. Select **From material** to pick up the corresponding setting from the domain material on each domain.

CONSTITUTIVE RELATION D-E

Select a **Dielectric model** to describe the macroscopic properties of the medium (relating the electric displacement $\mathbf{D}$ with the electric field $\mathbf{E}$) and the applicable material properties, such as the relative permittivity. Select:

- **Relative permittivity** (the default) to use the constitutive relation $\mathbf{D} = \varepsilon_0\varepsilon_r\mathbf{E}$. Then the default is to take the **Relative permittivity** ε_r (dimensionless) values **From material**. For **User defined**, select **Isotropic**, **Diagonal**, **Symmetric**, or **Full** and enter values or expressions in the field or matrix. The default is 1.
- **Polarization** to use the constitutive relation $\mathbf{D} = \varepsilon_0\mathbf{E} + \mathbf{P}$. Then enter the components based on space dimension for the **Polarization** vector $\mathbf{P}$ (SI unit: $\mathrm{C/m^2}$). The defaults are 0 $\mathrm{C/m^2}$.
- **Remanent electric displacement** to use constitutive relation $\mathbf{D} = \varepsilon_0\varepsilon_r\mathbf{E} + \mathbf{D}_r$, where $\mathbf{D}_r$ is the remanent displacement (the displacement when no electric field is present). Then the default is to take the **Relative permittivity** ε_r (dimensionless) values **From material**. For **User defined**, select **Isotropic**, **Diagonal**, **Symmetric**, or **Full** and enter values or expressions in the field or matrix. Then enter the components based on space dimension for the **Remanent electric displacement** $\mathbf{D}_r$ (SI unit: $\mathrm{C/m^2}$). The defaults are 0 $\mathrm{C/m^2}$.

Conduction Loss (Time-Harmonic)

	This feature requires the Acoustics Module, MEMS Module, or the Structural Mechanics Module. See the individual documentation for information.

The **Conduction Loss (Time-Harmonic)** subnode allows you to model possible conductive losses in a dielectric material. The effect is only active in a Eigenfrequency or Frequency response study.

CONDUCTION CURRENT

By default, the **Electrical conductivity** σ for the media is defined **From material**. You can also select **User defined** or **Linearized resistivity**.

- For **User defined** select **Isotropic**, **Diagonal**, **Symmetric**, or **Full** depending on the characteristics of the electrical conductivity, and then enter values or expressions for the **Electrical conductivity** σ in the field or matrix.
- For **Linearized resistivity** the default **Reference temperature** T_{ref}, and **Resistivity temperature coefficient** α, and **Reference resistivity** ρ_0 are taken **From material**, which means that the values are taken from the domain (or boundary) material. T is the current temperature, which can be a value that is specified as a model input or the temperature from a heat transfer interface. The definition of the temperature field appears in the **Model Inputs** section.

LOCATION IN USER INTERFACE

Context Menus

Electrostatics>Charge Conservation>Conduction Loss (Time-Harmonic)

Ribbon

Physics tab with **Charge Conservation** node selected in the model tree:

Attributes>Conduction Loss (Time-Harmonic)

Initial Values

The **Initial Values** node adds an initial value for the electric potential V that can serve as an initial condition for a transient simulation or as an initial guess for a nonlinear solver.

INITIAL VALUES

Enter a value or expression for the initial value of the **Electric potential** V (SI unit: V). The default value is 0 V.

Space Charge Density

The **Space Charge Density** node adds a space charge density ρ, which appears on the right-hand side of the equation that the physics interface defines.

SPACE CHARGE DENSITY

Enter a value or expression for the **Space charge density** ρ_v (SI unit: C/m^3). The default is 0 C/m^3.

Zero Charge

The **Zero Charge** node adds the condition that there is zero charge on the boundary so that $\mathbf{n} \cdot \mathbf{D} = 0$. This boundary condition is also applicable at symmetry boundaries where the potential is known to be symmetric with respect to the boundary. This is the default boundary condition at exterior boundaries. At interior boundaries, it means that no displacement field can penetrate the boundary and that the electric potential is discontinuous across the boundary.

Ground

The **Ground** node implements ground (zero potential) as the boundary condition $V = 0$.

Ground means that there is a zero potential on the boundary. This boundary condition is also applicable at symmetry boundaries where the potential is known to be antisymmetric with respect to the boundary.

For some physics interfaces, also select additional **Ground** nodes from the **Edges** (3D components) or **Points** (2D and 3D components) submenus. For 2D axisymmetric components, it can be applied on the Symmetry axis.

BOUNDARY, EDGE, OR POINT SELECTION

⚠	Beware that constraining the potential on edges or points in 3D or on points in 2D usually yields a current outflow that is mesh dependent.

CONSTRAINT SETTINGS

To display this section, click the **Show More Options** button ( ) and select **Advanced Physics Options** in the **Show More Options** dialog box.

Electric Potential

The **Electric Potential** node provides an electric potential V_0 as the boundary condition $V = V_0$.

Because the electric potential is being solved for in the physics interface, the value of the potential is typically defined at some part of the geometry. For some physics interfaces, also select additional **Electric Potential** nodes from the **Edges** (3D components) or **Points** (2D and 3D components) submenus. For 2D axisymmetric components, it can be applied on the symmetry axis.

BOUNDARY, EDGE, OR POINT SELECTION

⚠	Beware that constraining the potential on edges or points in 3D or on points in 2D usually yields a current outflow that is mesh dependent.

ELECTRIC POTENTIAL

Enter the value or expression for the **Electric potential** V_0 (SI unit: V). The default is 0 V.

CONSTRAINT SETTINGS

To display this section, click the **Show More Options** button ( ) and select **Advanced Physics Options** in the **Show More Options** dialog box.

Surface Charge Density

The **Surface Charge Density** node provides the following surface-charge boundary condition for exterior boundaries (left) and interior boundaries (right):

$$-\mathbf{n}\cdot\mathbf{D} = \rho_s, \qquad \mathbf{n}\cdot(\mathbf{D}_1-\mathbf{D}_2) = \rho_s$$

Specify the surface charge density ρ_s at an outer boundary or at an interior boundary between two nonconducting media.

Add a contribution as a **Harmonic Perturbation** by right-clicking the parent node or click **Harmonic Perturbation** on the **Physics** toolbar. For more information, see Harmonic Perturbation — Exclusive and Contributing Nodes.

SURFACE CHARGE DENSITY

Enter the value or expression for the **Surface charge density** ρ_s (SI unit: C/m^2).

External Surface Charge Accumulation

The **External Surface Charge Accumulation** node implements the boundary condition

$$-\mathbf{n}\cdot\mathbf{D} = \rho_s$$

where ρ_s is the solution of the following distributed ODE on the boundary:

$$\frac{d\rho_s}{dt} = \mathbf{n}\cdot\mathbf{J}_i + \mathbf{n}\cdot\mathbf{J}_e$$

where $\mathbf{n}\cdot\mathbf{J}_i$ is the normal component of the total ion current density on the wall and $\mathbf{n}\cdot\mathbf{J}_e$ is the normal component of the total electron current density on the wall, which are feature inputs.

MATERIAL TYPE

The **Material type** setting decides how materials behave and how material properties are interpreted when the mesh is deformed. Select **Solid** for materials whose properties change as functions of material strain, material orientation, and other variables evaluated in a material reference configuration (material frame). Select **Nonsolid** for materials whose properties are defined only as functions of the current local state at each point in the spatial frame, and for which no unique material reference configuration can be defined. Select **From material** to pick up the corresponding setting from the domain material on each domain.

EXTERNAL SURFACE CHARGE ACCUMULATION

Enter values or expressions for the **Normal ion current density** $\mathbf{n}\cdot\mathbf{J}_i$ (SI unit: A/m^2) and the **Normal electron current density** $\mathbf{n}\cdot\mathbf{J}_\mathbf{e}$ (SI unit: A/m^2).

Electric Displacement Field

The **Electric Displacement Field** node adds the following electric-displacement boundary condition:

$$\mathbf{n}\cdot\mathbf{D} = \mathbf{n}\cdot\mathbf{D}_0$$

It specifies the normal component of the electric displacement field at a boundary.

ELECTRIC DISPLACEMENT FIELD

Enter the coordinates of the **Boundary electric displacement field** $\mathbf{D}_0$ (SI unit: C/m^2).

Periodic Condition

The **Periodic Condition** node defines periodicity or antiperiodicity between two boundaries. If required, activate periodic conditions on more than two boundaries, in which case the Periodic Condition tries to identify two separate surfaces that can each consist of several connected boundaries. For more complex geometries, it might be necessary to use the **Destination Selection** subnode. With this subnode the boundaries which constitute the source and destination surfaces can be manually specified. The **Destination Selection** subnode is available from the context menu (right-click the parent node) as well as from the **Physics** toolbar, **Attributes** menu.

	When this feature is used in conjunction with a Sector Symmetry feature on connected boundaries, wherever the sector symmetry boundaries connect with the periodic boundaries, the same periodic condition feature cannot be used on both sides. At least two periodic condition features are required for the model to compute correctly.

BOUNDARY SELECTION

When using nonconforming meshes on the source and destination of a periodic boundary pair, for numerical stability, a finer mesh should be applied on the destination side. Use conforming meshes if possible.

PERIODIC CONDITION

Select a **Type of periodicity** — **Continuity** (the default), **Antiperiodicity**, or **Floquet periodicity**. Select:

- **Continuity** to make the electric potential periodic (equal on the source and destination).
- **Antiperiodicity** to make it antiperiodic.
- **Floquet periodicity** (only available with products supporting piezoelectric modeling). Specify the components of the **k-vector for Floquet periodicity** $\mathbf{k}_\mathrm{F}$ (SI unit: rad/m).

CONSTRAINT SETTINGS

To display this section, click the **Show More Options** button ( ) and select **Advanced Physics Options** in the **Show More Options** dialog box.

For information about the Orientation of Source section, see Orientation of Source and Destination.

Thin Low Permittivity Gap

Use the **Thin Low Permittivity Gap** node

$$\mathbf{n} \cdot \mathbf{D}_1 = \frac{\varepsilon_0 \varepsilon_r}{d}(V_1 - V_2)$$

$$\mathbf{n} \cdot \mathbf{D}_2 = \frac{\varepsilon_0 \varepsilon_r}{d}(V_2 - V_1)$$

to model a thin gap of a material with a small permittivity compared to the adjacent domains. The layer has the thickness d and the relative permittivity ε_r. The indices 1 and 2 refer to the two sides of the boundary.

THIN LOW PERMITTIVITY GAP

The default is to take the **Relative permittivity** ε_r (dimensionless) values **From material**. For **User defined**, enter a different value or expression. Enter a **Thickness** d (SI unit: m). The default is 5 mm.

Line Charge

For 3D components, use the **Line Charge** node to specify line charges along the edges of a geometry. Add a contribution as a **Harmonic Perturbation** by right-clicking the parent node or clicking **Harmonic Perturbation** on the **Physics** toolbar. For more information see Harmonic Perturbation — Exclusive and Contributing Nodes.

EDGE SELECTION

	Beware that constraining the potential on edges usually yields a current outflow that is mesh dependent.

LINE CHARGE

Enter a value or expression to apply a **Line charge** Q_L (SI unit: C/m). This source represents electric charge per unit length and the default is 0 C/m.

	Line Charge (on Axis) and Line Charge (Out-of-Plane)

Line Charge (on Axis)

For 2D axisymmetric components, use the **Line Charge (on Axis)** node to specify line charges along the symmetry axis.

Add a contribution as a **Harmonic Perturbation** by right-clicking the parent node or click **Harmonic Perturbation** on the **Physics** toolbar. For more information see Harmonic Perturbation — Exclusive and Contributing Nodes.

LINE CHARGE (ON AXIS)

Enter a value or expression to apply a **Line charge** Q_L (SI unit: C/m). This source represents electric charge per unit length and the default is 0 C/m.

	Line Charge and Line Charge (Out-of-Plane)

Line Charge (Out-of-Plane)

For 2D and 2D axisymmetric components, points are selected and this is the same as a line out-of-plane.

Add a contribution as a **Harmonic Perturbation** by right-clicking the parent node or clicking **Harmonic Perturbation** on the **Physics** toolbar. For more information see Harmonic Perturbation — Exclusive and Contributing Nodes.

Use the **Line Charge (Out-of-Plane)** node to specify line charges along the points of a geometry for 2D and 2D axisymmetric components.

POINT SELECTION

	Beware that constraining the potential on points usually yields a current outflow that is mesh dependent.

LINE CHARGE (OUT-OF-PLANE)

Enter a value or expression to apply a **Line charge** Q_L (SI unit: C/m). This source represents electric charge per unit length and the default is 0 C/m.

	Line Charge and Line Charge (on Axis)

Point Charge

The **Point Charge** node adds a point source to 3D components. The point charge represents an electric displacement field flowing out of the point.

Add a contribution as a **Harmonic Perturbation** by right-clicking the parent node or clicking **Harmonic Perturbation** on the **Physics** toolbar. For more information see Harmonic Perturbation — Exclusive and Contributing Nodes.

POINT SELECTION

⚠	Beware that constraining the potential on points usually yields a current outflow that is mesh dependent.

POINT CHARGE

Enter a value or expression to apply a **Point charge** Q_P (SI unit: C) to points. This source represents an electric displacement field flowing out of the point. The default is 0 C.

🔍	Point Charge (on Axis) and Line Charge (Out-of-Plane)

Point Charge (on Axis)

The **Point Charge (on Axis)** node adds a point source to 2D axisymmetric components. The point charge represents an electric displacement field flowing out of the point.

Add a contribution as a **Harmonic Perturbation** by right-clicking the parent node or clicking **Harmonic Perturbation** on the **Physics** toolbar. For more information see Harmonic Perturbation — Exclusive and Contributing Nodes.

POINT SELECTION

⚠	Beware that constraining the potential on points usually yields a current outflow that is mesh dependent.

POINT CHARGE (ON AXIS)

Enter a value or expression to apply a **Point charge** Q_P (SI unit: C) to points on an axis. This source represents an electric displacement field flowing out of the point. The default is 0 C.

🔍	Point Charge and Line Charge (Out-of-Plane)

Change Cross Section

This node is available with 1D components. This setting overrides the global **Cross-Section Area** setting made in any physics interface that uses this feature. For 2D components, see Change Thickness (Out-of-Plane).

Use the **Change Cross Section** node to set the cross-section area for specific geometric entities.

CHANGE CROSS SECTION

Enter a value or expression for the **Cross-section area** A. The default value of 1 unit length is typically not representative for a thin domain. Instead it describes a unit thickness that makes the 1D equation identical to the equation used for 3D components.

Change Thickness (Out-of-Plane)

This node is available for 2D components. This setting overrides the global **Thickness** setting made in any physics interface that uses this node. For 1D components, see Change Cross Section.

Use the **Change Thickness (Out-of-Plane)** node to set the out-of-plane thickness for specific geometric entities.

CHANGE THICKNESS (OUT-OF-PLANE)

Enter a value or expression for the **Out-of-plane thickness** d (SI unit: m). The default value is, in most cases, 1 unit length, which is typically not representative for a thin domain. Instead it describes a unit thickness that makes the 2D equation identical to the equation used for 3D components.

Charge Conservation, Piezoelectric

	This feature is available with the Piezoelectricity interface, which requires the Acoustics Module, MEMS Module, or the Structural Mechanics Module. See the individual documentation for information.

The **Charge Conservation, Piezoelectric** node is normally used together with a **Piezoelectric Effect** multiphysics coupling node and a corresponding **Piezoelectric Material** node in the **Solid Mechanics** interface. The node is added by default to the **Electrostatics** interface when adding a Piezoelectricity interface. It is also available from the context menu (right-click the **Electrostatics** interface parent node) or from the **Physics** toolbar.

	When the **Charge Conservation, Piezoelectric** node is added to the electrostatics interface in the absence of an active **Piezoelectric Effect** multiphysics coupling node, the material behaves similarly to a Charge Conservation node, with electric properties corresponding to the relative permittivity entered (see below). The piezoelectric effect is *not* included in the corresponding equation system.

ELECTRIC DISPLACEMENT

If the node is used together with an active **Piezoelectric Effect** multiphysics coupling node, then these settings are locked. Note that if they are unlocked, then the material behaves like a dielectric and *not* a piezoelectric. In this case, the default is to take the **Relative permittivity** ε_{rS} (dimensionless) values **From material**. For **User defined**, select **Isotropic**, **Diagonal**, **Symmetric**, or **Full** and enter values or expressions in the field or matrix.

The Electric Currents Interface

The **Electric Currents (ec)** interface ( ), under the **AC/DC>Electric Fields and Currents** branch when adding a physics interface, is used to compute electric field, current, and potential distributions in conducting media under conditions where inductive effects are negligible; that is, when the skin depth is much larger than the studied device.

Depending on the licensed products, stationary, frequency-domain, small-signal analysis, and time-domain modeling are supported in all space dimensions. In the time and frequency domains, capacitive effects are also accounted for.

The physics interface solves a current conservation equation based on Ohm's law using the scalar electric potential as the dependent variable.

Current Conservation is the main node, which adds the equation for the electric potential and provides a Settings window for defining the electrical conductivity as well as the constitutive relation for the electric displacement field and its associated material properties, such as the relative permittivity.

When this physics interface is added, these default nodes are also added to the **Model Builder** — **Current Conservation**, **Electric Insulation** (the default boundary condition), and **Initial Values**. Then, from the **Physics** toolbar, add other nodes that implement, for example, boundary conditions and current sources. You can also right-click **Electric Currents** to select physics features from the context menu.

Physics-Controlled Mesh

The physics-controlled mesh is controlled from the **Mesh** node's **Settings** window (if the **Sequence type** is **Physics-controlled mesh**). There, in the table in the **Physics-Controlled Mesh** section, find the physics interface in the **Contributor** column and select or clear the check box in the **Use** column on the same table row for enabling (the default) or disabling contributions from the physics interface to the physics-controlled mesh.

Information from the physics, such as the presence of an infinite elements domain or periodic condition, will be used to automatically set up an appropriate mesh sequence.

!	In the *COMSOL Multiphysics Reference Manual* see the Physics-Controlled Mesh section for more information about how to define the physics-controlled mesh.

SETTINGS

The **Label** is the default physics interface name.

The **Name** is used primarily as a scope prefix for variables defined by the physics interface. Refer to such physics interface variables in expressions using the pattern `<name>.<variable_name>`. In order to distinguish between variables belonging to different physics interfaces, the `name` string must be unique. Only letters, numbers, and underscores (_) are permitted in the **Name** field. The first character must be a letter.

The default **Name** (for the first physics interface in the model) is `ec`.

CROSS-SECTION AREA (1D)

Enter a default value for the **Cross-section area** A (SI unit: m^2). The default value of 1 is typically not representative for a thin domain. Instead it describes a unit thickness that makes the 1D equation identical to the equation used for 3D components. See also Change Cross Section (described for the Electrostatics interface).

THICKNESS (2D)

Enter a default value for the **Out-of-plane thickness** d (SI unit: m) (see Equation 10-1). The default value of 1 m is typically not representative for a thin dielectric medium, for example. Instead it describes a unit thickness that makes the 2D equation identical to the equation used for 3D components. See also Change Thickness (Out-of-Plane) (described for the Electrostatics interface).

DEPENDENT VARIABLES

The dependent variable is the **Electric potential** V. You can change its name, which changes both the field name and the variable name. If the new name coincides with the name of another electric potential field in the model, the physics interfaces share degrees of freedom. The new name must not coincide with the name of a field of another type or with a component name belonging to some other field.

DISCRETIZATION

	• Domain, Boundary, Edge, Point, and Pair Nodes for the Electric Currents Interface • Theory of Electric Currents

	Pacemaker Electrode: Application Library path **COMSOL_Multiphysics/Electromagnetics/pacemaker_electrode**

Domain, Boundary, Edge, Point, and Pair Nodes for the Electric Currents Interface

The Electric Currents interface has these domain, boundary, edge, point, and pair nodes available from the **Physics** ribbon toolbar (Windows users) or **Physics** context menu (Mac or Linux users). You can also right-click to access the context menu (all users).

	In general, to add a node, go to the **Physics** toolbar, no matter what operating system you are using. Subnodes are available by clicking the parent node and selecting it from the **Attributes** menu.

ABOUT THE BOUNDARY CONDITIONS

The exterior and interior boundary conditions listed in Table 10-2 are available. The relevant physics interface condition at interfaces between different media and interior boundaries is continuity; that is,

$$\mathbf{n}_2 \cdot (\mathbf{J}_1 - \mathbf{J}_2) = 0$$

which is the natural boundary condition.

AVAILABLE NODES

These nodes are available for this physics interface, listed in alphabetical order. Also see Table 10-2 for a list of interior and exterior boundary conditions, including edge, point, and pair availability.

- Boundary Current Source
- Contact Impedance
- Current Conservation
- Current Source
- Distributed Impedance
- Electric Insulation
- External Current Density
- Initial Values
- Line Current Source
- Line Current Source (on Axis)
- Normal Current Density
- Piezoresistive Material[1]
- Point Current Source
- Sector Symmetry

[1]This feature is available with the Piezoresistivity, Domain Currents interface, which requires the MEMS Module.

These nodes are described for the Electrostatics interface:

- Change Cross Section
- Change Thickness (Out-of-Plane)
- Electric Potential
- Ground
- Periodic Condition

!	In the *COMSOL Multiphysics Reference Manual*, see Table 2-4 for links to common sections and Table 2-5 for common feature nodes. You can also search for information: press F1 to open the **Help** window or Ctrl+F1 to open the **Documentation** window.

	For axisymmetric components, COMSOL Multiphysics takes the axial symmetry boundaries (at $r = 0$) into account and automatically adds an **Axial Symmetry** node to the model that is valid on the axial symmetry boundaries only.

Table 10-2 lists the interior and exterior boundary conditions available with this physics interface. It also includes edge, point, and pair availability.

TABLE 10-3: INTERIOR AND EXTERIOR BOUNDARY CONDITIONS (INCLUDING EDGE, POINT, AND PAIR AVAILABILITY) FOR THE ELECTRIC CURRENTS INTERFACE

NODE	INTERIOR	EXTERIOR	ALSO AVAILABLE FOR
Boundary Current Source	x		pairs
Contact Impedance	x		pairs
Distributed Impedance	x	x	not applicable
Electric Insulation	x	x	pairs
Electric Potential	x	x	edges, points, and pairs
Ground	x	x	edges, points, and pairs
Normal Current Density		x	not applicable
Periodic Condition		x	not applicable

Current Conservation

The **Current Conservation** node adds the continuity equation for the electrical potential and provides an interface for defining the electric conductivity as well as the constitutive relation and the relative permittivity for the displacement current.

MATERIAL TYPE

The **Material type** setting decides how materials behave and how material properties are interpreted when the mesh is deformed. Select **Solid** for materials whose properties change as functions of material strain, material orientation, and other variables evaluated in a material reference configuration (material frame). Select **Non-solid** for materials whose properties are defined only as functions of the current local state at each point in the spatial frame, and for which no unique material reference configuration can be defined. Select **From material** to pick up the corresponding setting from the domain material on each domain.

CONSTITUTIVE RELATION JC-E

By default, the **Electrical conductivity** σ (SI unit: S/m) for the media is defined **From material**. Or select **User defined** or **Linearized resistivity**.

User Defined

For **User defined** select **Isotropic**, **Diagonal**, **Symmetric**, or **Full** depending on the characteristics of the electrical conductivity, and then enter values or expressions for the electrical conductivity σ in the field or matrix. The default is 0 S/m. If type of temperature dependence is used other than a linear temperature relation, enter any expression for the conductivity as a function of temperature.

Linearized Resistivity

Select **Linearized resistivity** for a temperature-dependent conductivity (this occurs in, for example, Joule heating, and is also called resistive heating). The equation describing the conductivity:

$$\sigma = \frac{1}{\rho_0(1 + \alpha(T - T_{\mathrm{ref}}))}$$

where ρ_0 is the resistivity at the reference temperature T_{ref}, and α is the temperature coefficient of resistance, which describes how the resistivity varies with temperature.

The default **Reference resistivity** ρ_0 (SI unit: Ω·m), **Reference temperature** T_{ref} (SI unit: K), and **Resistivity temperature coefficient** α (SI unit: 1/K) are taken **From material**, which means that the values are taken from the domain (or boundary) material. T is the current temperature, which can be a value that is specified as a model input or the temperature from a heat transfer interface. The definition of the temperature field is in the **Model Inputs** section.

To specify other values for any of these properties, select **User defined** from the list and then enter a value or expression for each. The default values are:

- 1 Ω·m for the Reference resistivity
- 273.15 K for the Reference temperature, and
- 0 1/K for the Resistivity temperature coefficient

CONSTITUTIVE RELATION D-E

Select a **Dielectric model** to describe the macroscopic properties of the medium (relating the electric displacement $\mathbf{D}$ with the electric field $\mathbf{E}$) and the applicable material properties, such as the relative permittivity. For a description of the constitutive relations **Relative permittivity**, **Polarization**, and **Remanent electric displacement**, see **Electric Field**

as described for the Charge Conservation node for the Electrostatics interface. The constitutive relations specific to Electric Currents are:

- **Dielectric losses**: uses the constitutive relation $\mathbf{D} = \varepsilon_0(\varepsilon' + \varepsilon'')\mathbf{E}$. Specify that the **Relative permittivity (real part)** ε' (dimensionless) and the **Relative permittivity (imaginary part)** ε'' (dimensionless) must be taken **From material** or be **User defined**. For **User defined**, select **Isotropic**, **Diagonal**, **Symmetric**, or **Full** and enter values or expressions in the field or matrix. The default is 1.
- **Loss tangent, loss angle**: uses the constitutive relation $\mathbf{D} = \varepsilon_0\varepsilon'(1+j\tan\delta)\mathbf{E}$. Specify the **Relative permittivity (real part)** ε' (dimensionless) and **Loss angle** δ (SI unit: rad).
- **Loss tangent, dissipation factor**: uses the constitutive relation $\mathbf{D} = \varepsilon_0\varepsilon'(1+j\tan\delta)\mathbf{E}$. Specify the **Relative permittivity (real part)** ε' (dimensionless) and the **Dissipation factor** $\tan\delta$ (dimensionless).

Initial Values

The **Initial Values** node adds an initial value for the electric potential that can serve as an initial condition for a transient simulation or as an initial guess for a nonlinear solver. If more than one set of initial values is required, from the **Physics** toolbar, add other nodes that implement, for example, boundary conditions and current sources. Add more **Initial Values** nodes from the **Physics** toolbar.

INITIAL VALUES

Enter a value or expression for the initial value of the **Electric potential** V (SI unit: V). The default value is 0 V.

External Current Density

The **External Current Density** node adds an externally generated current density $\mathbf{J}_e$, which appears in Ohm's law

$$\mathbf{J} = \sigma\mathbf{E} + \mathbf{J}_e$$

and in the equation that the physics interface defines.

The external current density does not contribute to the losses (due to Joule heating), since there is no electric field associated with it. To include the contribution to the losses from the external current density, select the **Add contribution of the external current density to the losses** check box. Then select an option from the **External losses** list — **From domain conductivity** (the default) or **User defined**. If **From domain conductivity** is selected, the heat source is computed using the conductivity specified in the material model feature (such as **Current Conservation**) that is applied in the domain. For **User defined**, enter a value for Q_e (SI unit: W/m^3) to specify a user-defined heat source.

Add a contribution as a **Harmonic Perturbation** by right-clicking the parent node or clicking **Harmonic Perturbation** on the **Physics** toolbar. For more information see Harmonic Perturbation — Exclusive and Contributing Nodes.

EXTERNAL CURRENT DENSITY

Based on space dimension, enter the coordinates (**x**, **y**, and **z** for 3D components, for example) of the **External current density** $\mathbf{J}_e$ (SI unit: A/m^2). The defaults are 0 A/m^2.

Current Source

The **Current Source** node adds a distributed current source Q_j in the equation that the physics interface defines. Use this node with caution as it can violate the current conservation law that is inherent in Maxwell-Ampère's law.

Add a contribution as a **Harmonic Perturbation** by right-clicking the parent node or clicking **Harmonic Perturbation** on the **Physics** toolbar. For more information see Harmonic Perturbation — Exclusive and Contributing Nodes.

CURRENT SOURCE

Enter a value or expression for the **Current source** Q_j (SI unit: A/m^3). The default is 0 A/m^3.

Electric Insulation

The **Electric Insulation** node, which is the default boundary condition, adds electric insulation as the boundary condition:

$$\mathbf{n} \cdot \mathbf{J} = 0$$

This boundary condition means that no electric current flows into the boundary. At interior boundaries, it means that no current can flow through the boundary and that the electric potential is discontinuous across the boundary. It is also applicable at symmetric boundaries where the potential is known to be symmetric with respect to the boundary.

Electric insulation as the default boundary condition is not applicable to interior boundaries. To add electric insulation to an interior boundary, add an **Electric Insulation** node in addition to the one that represents the default boundary condition.

Boundary Current Source

The **Boundary Current Source** node adds a current source Q_j on the boundary.

$$\mathbf{n} \cdot (\mathbf{J}_1 - \mathbf{J}_2) = Q_\mathrm{j}$$

It is applicable to interior boundaries that represent either a source or a sink of current. Add a contribution as a **Harmonic Perturbation** by right-clicking the parent node or click **Harmonic Perturbation** on the **Physics** toolbar. For more information see Harmonic Perturbation — Exclusive and Contributing Nodes.

BOUNDARY CURRENT SOURCE

Enter a value or expression for the **Boundary current source** Q_j (SI unit: A/m^2). The default is 0 A/m^2.

Normal Current Density

The **Normal Current Density** node is applicable to exterior boundaries that represent either a source or a sink of current. It provides a condition for specifying the normal current density as an inward or outward current flow:

$$-\mathbf{n} \cdot \mathbf{J} = J_n$$

Or alternatively, as a current density $\mathbf{J}_0$:

$$\mathbf{n} \cdot \mathbf{J} = \mathbf{n} \cdot \mathbf{J}_0$$

The normal current density is positive when the current flows inward in the domain. Add a contribution as a **Harmonic Perturbation** by right-clicking the parent node or clicking **Harmonic Perturbation** on the **Physics** toolbar. For more information see Harmonic Perturbation — Exclusive and Contributing Nodes.

NORMAL CURRENT DENSITY

Select a **Type** — **Inward current density** (the default) or **Current density**.

- For **Inward current density** enter a value or expression for the **Normal current density** J_n (SI unit: A/m^2). Use a positive value for an inward current flow or a negative value for an outward current flow. The default is 0 A/m^2.
- For **Current density** enter values or expressions for the components of the **Current density** $\mathbf{J}_0$ (SI unit: A/m^2). The defaults are 0 A/m^2.

Distributed Impedance

The **Distributed Impedance** node adds a distributed impedance boundary condition to a model.

The **Harmonic Perturbation** subnode (it is of the exclusive type) is available from the context menu (right-click the parent node) or on the **Physics** toolbar, click the **Attributes** menu and select **Harmonic Perturbation**. For more information see Harmonic Perturbation — Exclusive and Contributing Nodes.

Use this boundary condition to model a thin sheet of a resistive material connected to a reference potential V_{ref}.

The layer impedance can be specified either with the bulk material conductivity σ_s, the relative permittivity ε_r and layer thickness d_s, or directly with the surface resistance ρ_s and capacitance C_s. Assuming DC currents, the equation is:

$$\mathbf{n}\cdot(\mathbf{J}_1-\mathbf{J}_2) = \frac{\sigma_s}{d_s}(V-V_{\text{ref}})$$

$$\mathbf{n}\cdot(\mathbf{J}_1-\mathbf{J}_2) = \frac{1}{\rho_s}(V-V_{\text{ref}})$$

DISTRIBUTED IMPEDANCE

Enter the reference potential V_{ref} (SI unit: V). The default is 0 V.

Select a potentially complex-valued **Layer specification** — **Thin layer** (the default) or **Surface impedance**.

- For **Thin layer**, enter values or expressions for the:
  - **Surface thickness** d_s (SI unit: m). The default is $5\cdot10^{-3}$ m (5 mm).
  - **Electrical conductivity** σ (SI unit: S/m) and **Relative permittivity** ε_r (dimensionless). The defaults take values **From material**. For **User defined**, enter different values or expressions. The default electrical conductivity is $1\cdot10^{-2}$ S/m and the default relative permittivity is 1.
- For **Surface impedance**, enter values or expressions for the **Surface resistance** ρ_s (SI unit: $\Omega\cdot\text{m}^2$) and the **Surface capacitance** C_s (SI unit: F/m^2). The default surface impedance is $1\cdot10^{-8}$ $\Omega\cdot\text{m}^2$ and the default surface capacitance is 0 F/m^2.

Contact Impedance

Use the **Contact Impedance** node on interior boundaries to model a thin layer of resistive material. It can also be added as a pair using a **Pair Contact Impedance** node. The feature allows specifying the contact impedance either by entering the properties of the material together with the layer thickness, or by entering the impedance properties of the thin layer directly.

The feature applies the following conditions that relate the normal electric current density with the jump in the electric potential:

$$\mathbf{n}\cdot\mathbf{J}_1 = \frac{\sigma}{d_s}(V_1-V_2)$$

$$\mathbf{n}\cdot\mathbf{J}_2 = \frac{\sigma}{d_s}(V_2-V_1)$$

$$\mathbf{n}\cdot\mathbf{J}_1 = \frac{1}{\rho_s}(V_1-V_2)$$

$$\mathbf{n}\cdot\mathbf{J}_2 = \frac{1}{\rho_s}(V_2-V_1)$$

The first two equations refer to a layer impedance specified using the bulk material conductivity σ_s and the layer thickness d_s, while the last two equations refer to the case in which the surface resistance ρ_s is specified. The indices 1 and 2 refer to the two sides of the boundary. These parameters work the same as with Distributed Impedance.

CONTACT IMPEDANCE

Select a potentially complex-valued **Layer specification** — **Thin layer** (the default) or **Surface impedance**.

- For **Thin layer**, enter values or expressions for the:
  - **Surface thickness** d_s (SI unit: m). The default is $5\cdot10^{-3}$ m (5 mm).
  - **Electrical conductivity** σ (SI unit: S/m) and **Relative permittivity** ε_r (dimensionless). The defaults take values **From material**. For **User defined**, enter different values or expressions. The default electrical conductivity is $1\cdot10^{-2}$ S/m and the default relative permittivity is 1.
- For **Surface impedance**, enter values or expressions for the **Surface resistance** ρ_s (SI unit: $\Omega\cdot m^2$) and the **Surface capacitance** C_s (SI unit: F/m^2). The default surface impedance is $1\cdot10^{-8}$ $\Omega\cdot m^2$ and the default surface capacitance is 0 F/m^2.

	Thin-Film Resistance: Application Library path **COMSOL_Multiphysics/Electromagnetics/thin_film_resistance**

Sector Symmetry

Select **Sector Symmetry** at interfaces between rotating objects where sector symmetry is used. It is only available for pairs. A default subnode is added. Right-click to select additional features from the **Fallback Features** submenu. In 2D, this feature assumes rotation around the origin.

	This feature is always used in conjunction with a Periodic Condition on adjacent radial sector boundaries. Note that the same periodic condition feature cannot be used on both sides of where the sector symmetry boundaries connect with the periodic boundaries. At least two periodic condition features are required for the model to compute correctly.

PAIR SELECTION

When using nonconforming meshes on the source and destination of a pair, for numerical stability, a finer mesh should be applied on the destination side for any pair with a condition that imposes a coupling or a constraint across the pair. The sector symmetry feature falls into this category.

SECTOR SETTINGS

Enter the **Number of sectors (<50)** n_{sect}. The default is 2.

Select a **Type of periodicity** — **Continuity** (the default) or **Antiperiodicity**.

Based on space dimension, enter values or expressions in the table for the **Axis of rotation** $\mathbf{a}_{rot}$.

CONSTRAINT SETTINGS

To display this section, click the **Show More Options** button ( ) and select **Advanced Physics Options** in the **Show More Options** dialog box.

Line Current Source

The **Line Current Source** node adds a line source to edges in 3D components and to points in 2D and 2D axisymmetric components. The line source represents electric current per unit length.

EDGE OR POINT SELECTION

	Beware that constraining the potential on edges or points usually yields a current outflow that is mesh dependent.

LINE CURRENT SOURCE

Enter a value or expression to apply a **Line current source** Q_j (SI unit: A/m). This source represents electric current per unit length. The default is 0 A/m.

	Line Current Source (on Axis) for 2D axisymmetric components.

Line Current Source (on Axis)

The **Line Current Source (on Axis)** node adds a line source to boundaries in 2D axisymmetric components. The line source represents electric current per unit length.

LINE CURRENT SOURCE (ON AXIS)

Enter a value or expression to apply a **Line current source** Q_j (SI unit: A/m) to boundaries. This source represents electric current per unit length.

	Line Current Source

Point Current Source

The **Point Current Source** node adds a point source and represents an electric current flowing out of the point. Add point sources to 3D components from the **Points** menu. Add a contribution as a **Harmonic Perturbation** by right-clicking the parent node or clicking **Harmonic Perturbation** on the **Physics** toolbar. For more information see Harmonic Perturbation — Exclusive and Contributing Nodes.

POINT SELECTION

⚠	Beware that constraining the potential on points usually yields a current outflow that is mesh dependent.

POINT CURRENT SOURCE

Enter a value or expression to apply a **Point current source** Q_j (SI unit: A) to points. This source represents an electric current flowing out of the point.

🔍	• Line Current Source for 2D components • Point Current Source (on Axis) for 2D axisymmetric components

Point Current Source (on Axis)

The **Point Current Source (on Axis)** node adds a point source and represents an electric current flowing out of the point in 2D axisymmetric components.

POINT SELECTION

⚠	Beware that constraining the potential on points usually yields a current outflow that is mesh dependent.

POINT CURRENT SOURCE

Enter a value or expression to apply a **Point current source** Q_j (SI unit: A) to points. This source represents an electric current flowing out of the point.

🔍	• Point Current Source for 3D components • Line Current Source for 2D components

Piezoresistive Material

The **Piezoresistive Material** is normally used together with a **Piezoresistive Effect, Domain Currents** multiphysics coupling node. The node is added by default to the **Electric Currents** interface when adding a **Piezoresistivity, Domain Currents** predefined multiphysics coupling interface. It is also available from the context menu (right-click the **Electric Currents** interface parent node) or from the **Physics** toolbar.

⚠	When the **Piezoresistive Material** node is added to the Electric Currents interface in the absence of an active **Piezoelectric Effect, Domain Currents** multiphysics coupling node, the material behaves similarly to a Current Conservation node, with electric properties corresponding to the relative permittivity and electrical conductivity entered. The piezoresistive effect is *not* included in the corresponding equation system.

PIEZORESISTIVE MATERIAL PROPERTY

This node should be used together with an active **Piezoresistive Effect, Domain Currents** multiphysics coupling node. Select a **Constitutive model** — **Piezoresistance form** or **Elastoresistance form**. For each of the following, the default uses values **From material**. For **User defined** enter other values in the matrix or field.

- Specify a **Electrical conductivity, zero stress** (SI unit: S/m). This typically comes from the material added under the Materials node.
- For **Piezoresistance form**, select a **Piezoresistance coupling matrix** Π_l (SI unit: $m^4/(s \cdot A^2)$; note that this is equivalent to Ω·m/Pa).
- For a **Elastoresistance form**, select an **Elastoresistance coupling matrix** M_l (SI unit: Ω·m).

The Magnetic Fields Interface

The **Magnetic Fields (mf)** interface ( ), found under the **AC/DC>Electromagnetic Fields** branch when adding a physics interface, is used to compute magnetic field and induced current distributions in and around coils, conductors, and magnets. Depending on the licensed products, stationary, frequency-domain, small-signal analysis, and time-domain modeling are supported in 2D and 3D. Note that the frequency and time-domain formulations become ill-posed when approaching the static limit. You can extend the useful frequency range downward by adding a low conductivity.

The physics interface solves Maxwell's equations, which are formulated using the magnetic vector potential and, optionally for coils, the scalar electric potential as the dependent variables.

The main node is Ampère's Law, which adds the equation for the magnetic vector potential and provides an interface for defining the constitutive relations and its associated properties, such as the relative permeability.

When this physics interface is added, these default nodes are also added to the **Model Builder** — **Magnetic Fields**, **Ampère's Law**, **Magnetic Insulation** (the default boundary condition), and **Initial Values**. Then, from the **Physics** toolbar, add other nodes that implement boundary conditions and external currents. You can also right-click **Magnetic Fields** to select physics features from the context menu.

Physics-Controlled Mesh

The physics-controlled mesh is controlled from the **Mesh** node's **Settings** window (if the **Sequence type** is **Physics-controlled mesh**). There, in the table in the **Physics-Controlled Mesh** section, find the physics interface in the **Contributor** column and select or clear the check box in the **Use** column on the same table row for enabling (the default) or disabling contributions from the physics interface to the physics-controlled mesh.

Information from the physics, such as the presence of an infinite elements domain or periodic condition, will be used to automatically set up an appropriate mesh sequence.

!	In the *COMSOL Multiphysics Reference Manual* see the Physics-Controlled Mesh section for more information about how to define the physics-controlled mesh.

SETTINGS

The **Label** is the default physics interface name.

The **Name** is used primarily as a scope prefix for variables defined by the physics interface. Refer to such physics interface variables in expressions using the pattern `<name>.<variable_name>`. In order to distinguish between variables belonging to different physics interfaces, the `name` string must be unique. Only letters, numbers, and underscores (_) are permitted in the **Name** field. The first character must be a letter.

The default **Name** (for the first physics interface in the model) is `mf`.

BACKGROUND FIELD

This section allows the specification of a background magnetic vector potential (that generates a background magnetic flux density). The only option to **Solve for** is **Full field**.

COMPONENTS

The current vector has the same direction as the magnetic vector potential. This setting also controls the direction in which applied and induced currents can flow in the model. The default option is to solve for the out-of-plane component only. Therefore, the only **Components** option is **Out-of-plane vector potential**.

THICKNESS

For 2D components, enter a value or expression for the global **Out-of-plane thickness** d (SI unit: m). The default of 1 m is typically not representative for a thin domain. Instead it describes a unit thickness that makes the 2D equation identical to the equation used for 3D components.

Use the Change Thickness (Out-of-Plane) node (described for the Electrostatics interface) to define specific geometric entities (for example, domains) instead of a global setting for the thickness.

ERROR CHECK

To display this section, click the **Show More Options** button ( ) and select **Advanced Physics Options** in the **Show More Options** dialog box.

When the **Check applicability of features in study** check box is selected, any features that are incompatible with the study will generate an error message when trying to solve or show the default solver. No solver will be generated. Deselect it and you will be able to run the model, possibly with runtime errors instead. It is available to allow the advanced user to tweak any feature and use it outside of its intended study scope.

DEPENDENT VARIABLES

The dependent variable is the **Magnetic vector potential** A. You can change both its field name and the individual component variable names. If the new field name coincides with the name of another magnetic vector potential field in the model, the physics interfaces share degrees of freedom and component names. The new field name must not coincide with the name of a field of another type, or with a component name belonging to some other field. Component names must be unique within a model, except for fields of the same type sharing a common field name.

DISCRETIZATION

	• Domain, Boundary, Point, and Pair Nodes for the Magnetic Fields Interface • Theory of Magnetic Fields

	Quadrupole Lens: Application Library path **COMSOL_Multiphysics/Electromagnetics/quadrupole**

Domain, Boundary, Point, and Pair Nodes for the Magnetic Fields Interface

The Magnetic Fields interface has these domain, boundary, point, and pair nodes available, which are listed in alphabetical order.

About the Boundary Conditions

With no surface currents present, the physics interface conditions

$$\mathbf{n}_2 \times (\mathbf{A}_1 - \mathbf{A}_2) = \mathbf{0}$$
$$\mathbf{n}_2 \times (\mathbf{H}_1 - \mathbf{H}_2) = \mathbf{0}$$

need to be fulfilled. Because $\mathbf{A}$ is being solved for, the tangential component of the magnetic potential is always continuous, and thus the first condition is automatically fulfilled. The second condition is equivalent to the natural boundary condition and is hence also fulfilled unless surface currents are explicitly introduced.

Table 10-2 lists the interior and exterior boundary conditions available with this physics interface.

TABLE 10-4: INTERIOR AND EXTERIOR BOUNDARY CONDITIONS FOR THE MAGNETIC FIELDS INTERFACE

NODE	INTERIOR	EXTERIOR
Magnetic Field		x
Magnetic Insulation	x	x
Magnetic Potential	x	x
Perfect Magnetic Conductor	x	x
Periodic Condition		x
Surface Current Density	x	x

Available Nodes

These nodes, listed in alphabetical order, are available from the **Physics** ribbon toolbar (Windows users), **Physics** context menu (Mac or Linux users), or by right-clicking to access the context menu (all users).

	In general, to add a node, go to the **Physics** toolbar no matter what operating system you are using. Subnodes are available by clicking the parent node and selecting it from the **Attributes** menu.

Also see Table 10-2 for a list of interior and exterior boundary conditions.

- Ampère's Law
- Ampère's Law, Magnetostrictive
- External Current Density
- Initial Values
- Line Current (Out-of-Plane)
- Magnetic Field
- Magnetic Insulation (the default boundary condition)
- Magnetic Potential
- Perfect Magnetic Conductor
- Surface Current Density
- Velocity (Lorentz Term)

	For 2D axisymmetric components, the COMSOL software takes the axial symmetry boundaries (at $r = 0$) into account and adds an **Axial Symmetry** node to the component that is valid on the axial symmetry boundaries only.

	Infinite Elements, Perfectly Matched Layers, and Absorbing Layers

	In the *COMSOL Multiphysics Reference Manual*, see Table 2-4 for links to common sections and Table 2-5 for common feature nodes. You can also search for information: press F1 to open the **Help** window or Ctrl+F1 to open the **Documentation** window.

Ampère's Law

The **Ampère's Law** node adds Ampère's law for the magnetic field and provides an interface for defining the constitutive relation and its associated properties as well as electric properties.

MATERIAL TYPE

The **Material type** setting decides how materials behave and how material properties are interpreted when the mesh is deformed. Select **Solid** for materials whose properties change as functions of material strain, material orientation, and other variables evaluated in a material reference configuration (material frame). Select **Non-solid** for materials whose properties are defined only as functions of the current local state at each point in the spatial frame, and for which no unique material reference configuration can be defined. Select **From material** to pick up the corresponding setting from the domain material on each domain.

CONSTITUTIVE RELATION JC-E

This section is described for the Current Conservation feature.

CONSTITUTIVE RELATION D-E

The default **Relative permittivity** ε_r (dimensionless) for the media is used **From material** and defined on the shell domain. For **User defined**, select **Isotropic**, **Diagonal**, **Symmetric**, or **Full** based on the characteristics of the permittivity and then enter values or expressions in the field or matrix.

CONSTITUTIVE RELATION B-H

Specify the constitutive relation that describes the macroscopic properties of the medium (relating the magnetic flux density $\mathbf{B}$ and the magnetic field $\mathbf{H}$) and the applicable material properties, such as the relative permeability.

The equation for the selected constitutive relation displays under the list. For all options, the default uses values **From material**, or select **User defined** to enter a different value or expression.

Select a **Magnetization model**— **Relative permeability** (the default), **B-H curve**, **Magnetic losses**, **Remanent flux density**, **Magnetization**, or **Effective B-H curve**.

Relative Permeability

Select **Relative permeability** μ_r (dimensionless) to use the constitutive relation $\mathbf{B} = \mu_0\mu_r\mathbf{H}$. For **User defined** select **Isotropic**, **Diagonal**, **Symmetric**, or **Full** and enter values or expressions in the field or matrix.

B-H Curve

Select **B-H curve** $|\mathbf{H}|$ (SI unit: A/m) to use a curve that relates magnetic flux density $\mathbf{B}$ and the magnetic field $\mathbf{H}$ as $|\mathbf{H}| = f(|\mathbf{B}|)$.

The **Magnetic field norm** and **Magnetic coenergy density** settings can take the values **From material** or **User defined**.

When **User defined** is selected, specify a user-defined expression for the magnetic field norm. The direction of the magnetic field is taken to be the same as the direction of the magnetic flux density at each point.

Magnetic Losses

Select **Magnetic losses** μ' and μ'' (dimensionless) to describe the relative permeability as a complex-valued quantity: $\mu_r = \mu' + i\mu''$, where μ' and μ'' are the real and imaginary parts, respectively.

Remanent Flux Density

Select **Remanent flux density** $\mathbf{B}_r$ (SI unit: T) to use the constitutive relation $\mathbf{B} = \mu_0\mu_{rec}\mathbf{H} + \mathbf{B}_r$, where μ_{rec} and $\mathbf{B}_r$ are the recoil permeability and the remanent flux density respectively (the flux density when no magnetic field is present). The recoil permeability μ_{rec} is very similar to the relative permeability, and is valid as long as the magnet is subjected to normal operating conditions (it is only valid within the linear region close to the vertical axis $\mathbf{H} = 0$). $\mathbf{B}_r$ is given by taking the remanent flux density norm (typically, provided by the material) and multiplying it with a normalized direction field specified in the physics: $\mathbf{B}_r = \|\mathbf{B}_r\|\ \mathbf{e}/\|\mathbf{e}\|$.

- The default recoil permeability μ_{rec} (dimensionless) uses values **From material**. For **User defined**, select **Isotropic**, **Diagonal**, **Symmetric**, or **Full** based on the characteristics of the recoil permeability and enter another value or expression in the field or matrix.

- The remanent flux density norm $\|\mathbf{B}_r\|$ is taken **From material** by default. *The AC/DC branch in the material library contains a number of hard magnetic materials specifically for this purpose*. Alternatively, chose **User defined**, and specify your own expression.
- Enter **x** and **y** components for the **Remanent flux direction e**.

Magnetization

Select **Magnetization M** (SI unit: A/m) to use the constitutive relation $\mathbf{B} = \mu_0\mathbf{H} + \mu_0\mathbf{M}$. Enter **x** and **y** components.

Effective B-H Curve

Select **Effective B-H curve** $|\mathbf{H}|_{\mathbf{eff}}$ (SI unit: A/m) to use an effective curve that provides the local linearized relation between the magnetic flux density **B** and the magnetic field **H** in time-harmonic problems.

External Material

Select **External material** to use a curve that relates magnetic flux density **B** and the magnetic field **H** as $|\mathbf{H}| = f(|\mathbf{B}|)$ according to an externally coded function.

Specify the **External material** to use (from the **Materials** node under **Global Definitions**). This setting allows using material models or constitutive relations defined in an external library. See Working with External Materials for more information.

Ampère's Law, Magnetostrictive

The **Ampère's Law, Magnetostrictive** node adds Ampère's law for the magnetic field in a magnetostrictive material and provides an interface for defining the electric properties. It is normally used as part of Magnetostriction multiphysics interface together with a **Magnetostriction** multiphysics coupling node and **Magnetostrictive Material** node in the corresponding **Solid Mechanics** interface. **Ampère's Law, Magnetostrictive** node is added by default to the **Magnetic Fields** interface when adding a Magnetostriction multiphysics interface. The interface requires the AC/DC Module and at least one of the following modules: Structural Mechanics, MEMS, Acoustics.

⚠	When the **Ampère's Law, Magnetostrictive** node is added to the Magnetic Fields interface in the absence of an active **Magnetostriction** multiphysics coupling node, the material behaves similarly to an **Ampère's Law** node with some limitations. Thus, the magnetic permittivity of free space will be assumed. The magnetostrictive effect is then *not* included in the corresponding equation system.

CONDUCTION CURRENT

This section is described for the Current Conservation feature.

ELECTRIC FIELD

The default **Relative permittivity** ε_r (dimensionless) for the media is used **From material** and defined on the shell domain. For **User defined**, select **Isotropic**, **Diagonal**, **Symmetric**, or **Full** based on the characteristics of the permittivity and then enter values or expressions in the field or matrix.

MAGNETIC FIELD

Specify the constitutive relation that describes the macroscopic properties of the medium (relating the magnetic flux density **B** and the magnetic field **H**) for a magnetostrictive material:

$$\mathbf{B} = \mu_0[\mathbf{H} + \mathbf{M}(\mathbf{H}, S_{mech}) + \mathbf{M}_r]$$

where $\mathbf{M}(\mathbf{H}, S_{\text{mech}})$ is material magnetization which depends on the magnetic field and mechanical stress; a particular form of this dependency can be specified under the corresponding **Magnetostrictive Material** node in the **Solid Mechanics** interface.

$\mathbf{M}_r$ is the remanent magnetization (SI unit: A/m). Enter **X** and **Y** components.

	• Magnetostriction • Modeling Magnetostrictive Materials • Magnetostrictive Material

Initial Values

The **Initial Values** node adds an initial value for the magnetic vector potential A that can serve as an initial value for a transient simulation or as an initial guess for a nonlinear solver.

INITIAL VALUES

Enter values or expressions for the **Magnetic vector potential** $\mathbf{A}$ (SI unit: Wb/m). The defaults are 0 Wb/m.

External Current Density

The **External Current Density** node adds an externally generated current density $\mathbf{J}_e$, which appears on the right-hand side of the equation that the Magnetic Fields interface defines.

Add a contribution as a **Harmonic Perturbation** by right-clicking the parent node or clicking **Harmonic Perturbation** on the **Physics** toolbar. For more information see Harmonic Perturbation — Exclusive and Contributing Nodes.

EXTERNAL CURRENT DENSITY

Enter a value or expression for each component of the **External current density** $\mathbf{J}_e$ (SI unit: A/m^2). The defaults are 0 A/m^2.

The external current density does not contribute to the losses (due to Joule heating), since there is no electric field associated with it. To include the contribution to the losses from the external current density, select the **Add contribution of the external current density to the losses** check box. Then select an option from the **External losses** list — **From domain conductivity** (the default) or **User defined**. If **From domain conductivity** is selected, the heat source is computed using the conductivity specified in the material model feature (such as **Ampère's Law**) that is applied in the domain. For **User defined**, enter a value for Q_e (SI unit: W/m^3) to specify a user-defined heat source.

Velocity (Lorentz Term)

This node is only valid in 2D and 2D axisymmetry when only solving for the out-of-plane component of the magnetic vector potential.

!	Correct use of the velocity feature requires deep physical insight. In situations when the moving domain is of bounded extent in the direction of the motion, material properties vary in this direction, or the domains contains magnetic sources that also move, the Lorentz term must not be used.

The **Velocity (Lorentz term)** node adds velocity $\mathbf{v}$. The external current is equal to $\sigma\mathbf{v} \times \mathbf{B}$.

An operational definition of when it can be used is that the moving domain should only contain an induced magnetic source (magnetization plus eddy currents) that has to be stationary with respect to the motion. Thus, it cannot be used for modeling projectiles of finite length or projectiles containing magnets. It can be used to model conductive, homogeneous spinning disks (magnetic brakes); magnets over a moving infinite homogeneous plane (maglev trains); and flow of homogeneous conducting fluid past a magnet (liquid metal pumps or Hall generators/thrusters, for example).

	If you are not sure how to proceed, contact the COMSOL Support Center: http://www.comsol.com/support.

VELOCITY (LORENTZ TERM)

User defined is selected by default. Enter the components for the **Velocity** vector $\mathbf{v}$ (SI unit: m/s) or, if present, select any velocity field defined in the model. For example, using the velocity field is useful when coupling to the velocity field of a fluid for a magnetohydrodynamic model.

Magnetic Insulation

The **Magnetic Insulation** node is the default boundary condition for the Magnetic Fields interface and adds a boundary condition that sets the tangential components of the magnetic potential to zero at the boundary $\mathbf{n} \times \mathbf{A} = 0$.

Magnetic insulation is a special case of the magnetic potential boundary condition that sets the tangential component of the magnetic potential to zero.

This node is used for the modeling of a lossless metallic surface, for example, a ground plane or as a symmetry type boundary condition. The node imposes symmetry for magnetic fields and "magnetic currents." In the transient and time harmonic formulations, it also imposes antisymmetry for electric fields and electric currents. The node supports induced electric surface currents and thus any prescribed or induced electric currents (volume, surface, or edge currents) flowing into a perfect electric conductor boundary are automatically balanced by induced surface currents.

The Magnetic Insulation node can also be applied on interior boundaries. The boundary will then support two surface current densities on the two sides, denoted bu `Jsu` (upside) and `Jsd` (downside).

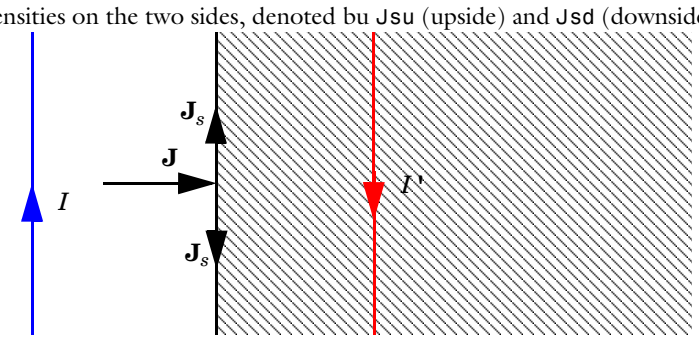

Figure 10-1: The magnetic insulation boundary condition is used on exterior and interior boundaries representing the surface of a lossless metallic conductor or (on exterior boundaries) a symmetry cut. The shaded (metallic) region is not part of the model but still carries effective mirror images of the sources. Note also that any current flowing into the boundary is perfectly balanced by induced surface currents. The tangential vector potential (and electric field) vanishes at the boundary.

CONSTRAINT SETTINGS

To display this section, click the **Show More Options** button ( ) and select **Advanced Physics Options** in the **Show More Options** dialog box.

!	Weak constraints perform poorly when applied on vector elements. They should be used when the magnetic vector potential is discretized with Lagrange elements, for example, when solving for out-of-plane component in a two-dimensional component.

Magnetic Field

The **Magnetic Field** node adds a boundary condition for specifying the tangential component of the magnetic field at the boundary:

$$\mathbf{n} \times \mathbf{H} = \mathbf{n} \times \mathbf{H}_0$$

The **Harmonic Perturbation** subnode (it is of the exclusive type) is available from the context menu (right-click the parent node) or on the **Physics** toolbar by clicking the **Attributes** menu and selecting **Harmonic Perturbation**. For more information see Harmonic Perturbation — Exclusive and Contributing Nodes.

MAGNETIC FIELD

Enter the value or expression for the **Magnetic Field** $\mathbf{H}_0$ (SI unit: A/m) vector coordinates. The defaults are 0 A/m.

Surface Current Density

The **Surface Current** node adds a boundary condition for a surface current density $\mathbf{J}_s$:

$$-\mathbf{n} \times \mathbf{H} = \mathbf{J}_s$$
$$\mathbf{n} \times (\mathbf{H}_1 - \mathbf{H}_2) = \mathbf{J}_s$$

These expressions apply to exterior and interior boundaries respectively. Add a contribution as a **Harmonic Perturbation** by right-clicking the parent node or clicking **Harmonic Perturbation** on the **Physics** toolbar. For more information see Harmonic Perturbation — Exclusive and Contributing Nodes.

SURFACE CURRENT

Enter values or expressions for the **Surface current density** $\mathbf{J}_{s0}$ (SI unit: A/m) coordinates. The defaults are 0 A/m.

Magnetic Potential

The **Magnetic Potential** node adds a boundary condition for the magnetic vector potential:

$$\mathbf{n} \times \mathbf{A} = \mathbf{n} \times \mathbf{A}_0$$

MAGNETIC POTENTIAL

Enter a value or expression for the **Magnetic vector potential** $\mathbf{A}_0$ (SI unit: Wb/m) coordinates.

CONSTRAINT SETTINGS

To display this section, click the **Show More Options** button ( ) and select **Advanced Physics Options** in the **Show More Options** dialog box.

Perfect Magnetic Conductor

The **Perfect Magnetic Conductor** boundary condition $\mathbf{n} \times \mathbf{H} = 0$ is a special case of the surface current boundary condition that sets the tangential component of the magnetic field and thus also the surface current density to zero. On external boundaries, this can be interpreted as a "high surface impedance" boundary condition or used as a symmetry type boundary condition. It imposes symmetry for electric fields and electric currents. Electric currents (volume, surface, or edge currents) are not allowed to flow into a perfect magnetic conductor boundary as that would violate current conservation. On interior boundaries, the perfect magnetic conductor boundary condition literally sets the tangential magnetic field to zero, which, in addition to setting the surface current density to zero, also makes the tangential magnetic vector potential (and in dynamics the tangential electric field) discontinuous.

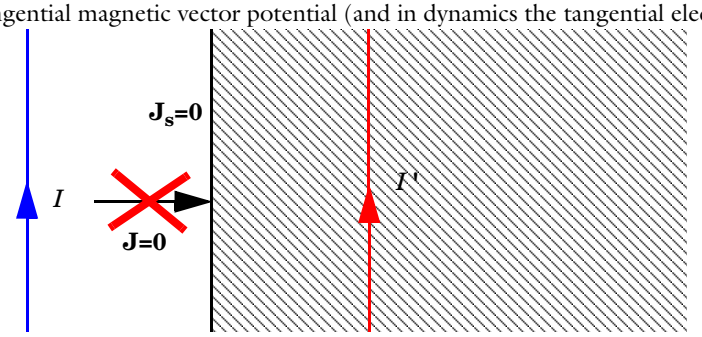

Figure 10-2: The perfect magnetic conductor boundary condition is used on exterior boundaries representing the surface of a high impedance region or a symmetry cut. The shaded (high impedance) region is not part of the model but nevertheless carries effective mirror images of the sources. Note also that any electric current flowing into the boundary is forbidden as it cannot be balanced by induced electric surface currents. The tangential magnetic field vanishes at the boundary.

Line Current (Out-of-Plane)

Use the **Line Current (Out-of-Plane)** node, selected from the **Points** menu, to specify a line current out of the modeling plane. In axially symmetric geometries this is the rotational (azimuthal) direction; in 2D geometries this is the z direction.

LINE CURRENT (OUT-OF-PLANE)

Enter a value or expression for the **Out-of-plane current** I_0 (SI unit: A).

Line Current (on Axis)

The **Line Current (on Axis)** feature is available for 2D axisymmetric components. It applies to edges that coincide with the symmetry axis, and is active only when in-plane magnetic vector potential components are available (for more information, see Components). Use the **Line Current (on Axis)** feature to specify a line current along the symmetry axis.

LINE CURRENT (ON AXIS)

Enter a value or expression for the **Line current in z direction** I_z (SI unit: A).

11

The Pressure Acoustics Interface

This chapter describes how to use the Pressure Acoustics, Frequency Domain interface, found under the **Acoustics>Pressure Acoustics** branch ( ) when adding a physics interface.

Fundamentals of Acoustics

This section includes a brief introduction to acoustics, gives some examples of standard acoustics problems, and provides a short introduction to the mathematical formulation of the governing equations.

In this section:

- Acoustics Explained
- Examples of Standard Acoustics Problems
- Different Acoustic Interfaces
- Mathematical Models for Acoustic Analysis

Acoustics Explained

Acoustics is the physics of sound. Sound is the sensation, as detected by the ear, of very small rapid changes in the air pressure above and below a static value. This static value is the atmospheric pressure (about 100,000 pascals), which varies slowly. A sound pressure wave is associated with a flow of energy—the intensity. Physically, sound in air is a longitudinal wave where the wave motion is in the direction of the movement of energy. The wave crests are the pressure maxima, while the troughs represent the pressure minima.

Sound results when the air is disturbed by some source. An example is a vibrating object, such as a speaker cone in a sound system. It is possible to see the movement of a bass speaker cone when it generates sound at a very low frequency. As the cone moves forward it compresses the air in front of it, causing an increase in air pressure. Then it moves back past its resting position and causes a reduction in air pressure. This process continues, radiating a wave of alternating high and low pressure propagating at the speed of sound.

The propagation of sound in solids happens through small-amplitude elastic oscillations of its shape. These elastic waves are transmitted to surrounding fluids as ordinary sound waves. The elastic sound waves in the solid are the counterpart to the pressure waves or compressible waves propagating in the fluid.

Examples of Standard Acoustics Problems

These standard problems or scenarios occur frequently when analyzing acoustics:

THE RADIATION PROBLEM

A vibrating structure (a speaker, for example) radiates sound into the surrounding space. A radiation boundary condition or perfectly matched layer (PML) is necessary to model the unbounded open domain.

THE SCATTERING PROBLEM

An incident wave impinges on a body and creates a scattered wave. A radiation boundary condition or PML is necessary. This could be a sonar application in underwater acoustics or an analysis of the scattered sound field around a human head.

THE SOUND FIELD IN AN INTERIOR SPACE

The acoustic waves stay in a finite volume so no radiation condition is necessary. For example, this case represents the sound inside a room or a car interior. A more advanced example is the sound inside a transducer like a microphone; in this case, the acoustic field should be solved with the Thermoviscous Acoustics interface. Analysis using thermoviscous acoustics requires the Acoustics Module.

COUPLED FLUID-ELASTIC STRUCTURE INTERACTION (STRUCTURAL ACOUSTICS)

If the radiating or scattering structure consists of an elastic material, the interaction must be considered between the body and the surrounding fluid. In the multiphysics coupling, the acoustic analysis provides a load (the sound pressure) to the structural analysis, and the structural analysis provides accelerations to the acoustic analysis.

THE TRANSMISSION PROBLEM

An incident sound wave propagates into a body, which can have different acoustic properties. Pressure and acceleration are continuous on the boundary. A typical transmission problem is that of modeling the behavior of mufflers.

AEROACOUSTICS PROBLEMS

The sound (noise) field is influenced by a background flow. This could be the propagating sound from a jet engine or the acoustic damping properties of a muffler with flow. Analysis of these types of problems requires the addition of the Acoustics Module.

POROELASTIC WAVES PROBLEM

If the acoustic waves are propagating inside the saturating fluid of porous material, the detailed coupling between the fluid pressure and the solid displacement needs to be taken into account. In cases when only the fluid pressure is of interest, the porous material can be modeled using an equivalent fluid model. Analysis of this type of problem requires the addition of the Acoustics Module.

TRANSDUCER PROBLEMS

Transducers are devices for transformation of one form of energy to another (electrical, mechanical, or acoustical). This type of problem is common in acoustics and is a true multiphysics problem involving electric, structural, and acoustic interfaces. Typical problems of this type involve modeling loudspeakers, microphones, and piezo transducers. Analysis of these types of problems requires the addition of the Acoustics Module.

Different Acoustic Interfaces

Depending on the basic dependent variable used to model the acoustic field, the acoustical interfaces can be divided into the following main categories.

- Pressure acoustics—The dependent variable is the acoustic pressure p.
- Acoustic-solid interaction—The dependent variables are the pressure p and the displacement field $\mathbf{u}$ in the solid. This type of problem requires the addition of the Acoustics Module.
- Poroelastic waves—The dependent variables are the pressure p inside the saturating fluid and the total displacement $\mathbf{u}$ of the porous matrix. This type of problem requires the addition of the Acoustics Module.
- Aeroacoustics—The dependent variables are the acoustic perturbations to the background mean flow fields. In the Linearized Potential Flow interface, it is the potential ϕ for the acoustic particle-velocity field $\mathbf{v} = \nabla\phi$. In the Linearized Euler interface, the dependent variables are the acoustic variations in pressure p, density ρ, and velocity field $\mathbf{u}$. In the linearized Navier-Stokes, they are the pressure p, velocity field $\mathbf{u}$, and temperature T. In the typical situation, the background fluid is in motion with, for example, a total velocity $\mathbf{u}_{tot} = \mathbf{u}_0 + \mathbf{u}$, split into a stationary background-flow velocity $\mathbf{u}_0$ and the particle velocity $\mathbf{u}$ associated with the acoustic waves. This type of problem requires the addition of the Acoustics Module.
- Thermoviscous acoustics—The dependent variables are the acoustic pressure p, the particle-velocity field $\mathbf{v}$, and the acoustic temperature variation T. This is a detailed acoustic model solving the full set of linearized equations for a compressible flow: Navier-Stokes (momentum conservation), continuity (mass conservation), and energy conservation equations. This type of problem requires the addition of the Acoustics Module.
- Geometrical acoustics—At high frequencies when the typical wavelength becomes comparable with the geometrical features, standard finite element methods are no longer appropriate. Instead the acoustic field can

be solved using ray tracing methods or energy methods. The Ray Acoustics and Acoustic Diffusion Equation interfaces apply here. This type of problem requires the addition of the Acoustics Module.

Mathematical Models for Acoustic Analysis

Standard acoustic problems involve solving for the small acoustic pressure variations p on top of the stationary background pressure p_0. Mathematically this represents a linearization (small parameter expansion) around the stationary quiescent values.

The governing equations for a compressible lossless (no thermal conduction and no viscosity) fluid flow problem are the momentum equation (Euler's equation) and the continuity equation. These are given by:

$$\frac{\partial \mathbf{u}}{\partial t} + (\mathbf{u} \cdot \nabla)\mathbf{u} = -\frac{1}{\rho}\nabla p$$
$$\frac{\partial \rho}{\partial t} + \nabla \cdot (\rho \mathbf{u}) = 0$$

where ρ is the total density, p is the total pressure, and $\mathbf{u}$ is the velocity field. In classical pressure acoustics, all thermodynamic processes are assumed reversible and adiabatic, known as an isentropic process. The small parameter expansion is performed on a stationary fluid of density ρ_0 (SI unit: kg/m^3) and at pressure p_0 (SI unit: Pa) such that:

$$\begin{aligned} p &= p_0 + p' \\ \rho &= \rho_0 + \rho' \\ \mathbf{u} &= \mathbf{0} + \mathbf{u}' \end{aligned} \qquad \text{with} \qquad \begin{aligned} p' &\ll p_0 \\ \rho' &\ll \rho_0 \end{aligned}$$

where the primed variables represent the small acoustic variations. Inserting these into the governing equations and only retaining terms linear in the primed variables yields:

$$\frac{\partial \mathbf{u}'}{\partial t} = -\frac{1}{\rho_0}\nabla p'$$
$$\frac{\partial \rho'}{\partial t} + \rho_0(\nabla \cdot \mathbf{u}') = 0$$

One of the dependent variables, the density, is removed by expressing it in terms of the pressure using a Taylor expansion (linearization)

$$\rho' = \left.\frac{\partial \rho_0}{\partial p}\right|_s p' = \frac{1}{c_s^2}p'$$

where c_s is recognized as the (isentropic) speed of sound (SI unit: m/s) at constant entropy s. The subscripts s and 0 are dropped in the following.

Finally, rearranging the equations (divergence of momentum equation inserted into the continuity equation) and dropping the primes yields the wave equation for sound waves in a lossless medium

$$\frac{1}{\rho c^2}\frac{\partial^2 p}{\partial t^2} + \nabla \cdot \left(-\frac{1}{\rho}(\nabla p - \mathbf{q}_d)\right) = Q_m \tag{11-1}$$

The speed of sound is related to the compressibility of the fluid where the waves are propagating. The combination ρc^2 is called the *bulk modulus*, commonly denoted K (SI unit: N /m^2). The equation is further extended with two optional source terms:

- The *dipole source* $\mathbf{q}_\mathrm{d}$ (SI unit: N/m^3)
- The *monopole source* Q_m (SI unit: 1/s^2)

A special case is a time-harmonic wave, for which the pressure varies with time as

$$p(\mathbf{x}, t) = p(\mathbf{x}) e^{i\omega t}$$

where $\omega = 2\pi f$ (SI unit: rad/s) is the angular frequency and f (SI unit: Hz) is denoting the frequency. Assuming the same harmonic time-dependence for the source terms, the wave equation for acoustic waves reduces to an inhomogeneous Helmholtz equation

$$\nabla \cdot \left(-\frac{1}{\rho}(\nabla p - \mathbf{q}_d)\right) - \frac{\omega^2 p}{\rho c^2} = Q_m \,. \tag{11-2}$$

With the two source terms removed, this equation can also be treated as an eigenvalue PDE to solve for eigenmodes and eigenfrequencies.

Typical boundary conditions for the wave equation and the Helmholtz equation are:

- Sound-hard boundaries (walls)
- Sound-soft boundaries
- Impedance boundary conditions
- Radiation boundary conditions

In lossy media, an additional term of first order in the time derivative needs to be introduced to model attenuation of the sound waves

$$\frac{1}{\rho c^2}\frac{\partial^2 p}{\partial t^2} - d_\mathrm{a}\frac{\partial p}{\partial t} + \nabla \cdot \left(-\frac{1}{\rho}(\nabla p - \mathbf{q}_d)\right) = Q_m$$

where d_a is the damping coefficient. Note also that even when the sound waves propagate in a lossless medium, attenuation frequently occurs by interaction with the surroundings at the boundaries of the system.

The Pressure Acoustics, Frequency Domain Interface

The **Pressure Acoustics, Frequency Domain (acpr)** interface ( ), found under the **Pressure Acoustics** branch ( ) when adding a physics interface, is used to compute the pressure variation for propagation of acoustic waves in fluids at quiescent background conditions. It is suited for all frequency-domain simulations with harmonic variations of the pressure field.

The physics interface can be used for linear acoustics described by a scalar pressure variable. It includes domain conditions to model losses in a homogenized way, so-called fluid models for porous materials, as well as losses in narrow regions. Domain features also include background incident acoustic fields as well as domain monopole and dipole sources. The plane wave attenuation behavior of the acoustic waves may be entered as a user-defined quantity, or defined to be bulk viscous and thermal losses.

The physics interface solves the Helmholtz equation in the frequency domain for given frequencies, or as an eigenfrequency or modal analysis study.

An acoustics model can be part of a larger multiphysics model that describes, for example, the interactions between structures and acoustic waves. This physics interface is suitable for modeling acoustics phenomena that do not involve fluid flow.

The sound pressure p, which is solved for in pressure acoustics, represents the acoustic variations (or excess pressure) to the ambient pressure. In the absence of flow, the ambient pressure is simply the static absolute atmospheric pressure of 10^5 Pa.

When the geometrical dimensions of the acoustic problems are reduced from 3D to 2D (planar symmetry or axisymmetric) or to 1D axisymmetric, it is possible to specify an out-of-plane wave number k_z and a circumferential wave number m, when applicable. In this case the wave number used in the equations k_{eq} contains both the ordinary wave number k as well as the out-of-plane wave number and circumferential wave number, when applicable.

The following table lists the names and SI units for the most important physical quantities in the Pressure Acoustics, Frequency Domain interface:

TABLE 11-1: PRESSURE ACOUSTICS, FREQUENCY DOMAIN INTERFACE PHYSICAL QUANTITIES

QUANTITY	SYMBOL	SI UNIT	ABBREVIATION
Pressure	p	Pascal	Pa
Density	ρ	kilogram/meter^3	kg/m^3
Frequency	f	Hertz	Hz
Wave number	k	1/meter	1/m
Dipole source	$\mathbf{q}_{\mathrm{d}}$	newton/meter^3	N/m^3
Monopole source	Q_{m}	1/second^2	1/s^2
Speed of sound	c	meter/second	m/s
Specific acoustic impedance	Z	pascal-second/meter	Pa·s/m
Normal acceleration	a_n	meter/second^2	m/s^2
Source location	r_0	meter	m
Wave direction	$\mathbf{n}_{\mathrm{k}}$	(dimensionless)	1

In the following descriptions of the functionality in this physics interface, the subscript c in ρ_{c} and c_c (the density and speed of sound, respectively) denotes that these can be complex-valued quantities in models with damping.

When this physics interface is added, these default nodes are also added to the **Model Builder**— **Pressure Acoustics Model**, **Sound Hard Boundary (Wall)**, and **Initial Values**.

Then, from the **Physics** toolbar, add other nodes that implement, for example, boundary conditions and point conditions. You can also right-click **Pressure Acoustics** to select physics features from the context menu.

Physics Nodes — Equation Section

SETTINGS

The **Label** is the default physics interface name.

The **Name** is used primarily as a scope prefix for variables defined by the physics interface. Refer to such physics interface variables in expressions using the pattern `<name>.<variable_name>`. In order to distinguish between variables belonging to different physics interfaces, the `name` string must be unique. Only letters, numbers, and underscores (_) are permitted in the **Name** field. The first character must be a letter.

The default **Name** (for the first physics interface in the model) is `acpr`.

EQUATION

Expand the **Equation** section to see the equations solved for with the **Equation form** specified. The default selection is **Equation form** set to **Study controlled**. The available studies are selected under **Show equations assuming**.

- For **Study controlled**, the scaling and nonreflecting boundary settings are optimized for the numerical performance of the different solvers.
- For **Frequency domain**, enter the settings as described in Scaling Factor and Nonreflecting Boundary Condition Approximation.

PRESSURE ACOUSTICS EQUATION SETTINGS

- For 1D axisymmetric components, the default **Out-of-plane wave number** k_z (SI unit: rad/m) is 0 rad/m. The default **Circumferential wave number** m (dimensionless) is 0. The pressure has the form:

$$p(r, \varphi, z) = p(r)e^{-i(k_z z + m\varphi)}$$

- For 2D axisymmetric components, the default **Circumferential wave number** m (dimensionless) is 0. The pressure has the form:

$$p(r, \varphi, z) = p(r, z)e^{-im\varphi}$$

- For 2D components, the default **Out-of-plane wave number** k_z (SI unit: rad/m) is 0 rad/m. The pressure has the form:

$$p(x, y, z) = p(x, y)e^{-ik_z z}$$

Scaling Factor and Nonreflecting Boundary Condition Approximation

For all component dimensions, and if required, click to expand the **Equation** section, then select **Frequency domain** as the **Equation form** and enter the settings as described below.

The default **Scaling factor** Δ is $1/\omega^2$ and **Non-reflecting boundary condition approximation** is **Second order**. These values correspond to the equations for a Frequency Domain study when the equations are study controlled.

To get the equations corresponding to an Eigenfrequency study, change the **Scaling factor** Δ to 1 and the **Non-reflecting boundary conditions approximation** to **First order**.

SOUND PRESSURE LEVEL SETTINGS

The zero level on the dB scale varies with the type of fluid. That value is a reference pressure that corresponds to 0 dB. This variable occurs in calculations of the sound pressure level L_p based on the root mean square (rms) pressure p_{rms}, such that

$$L_p = 20\log\left(\frac{p_{rms}}{p_{ref}}\right) \qquad \text{with} \qquad p_{rms} = \sqrt{\frac{1}{2}pp^*}$$

where p_{ref} is the reference pressure and the star (*) represents the complex conjugate. This is an expression valid for the case of harmonically time-varying acoustic pressure p.

Select a **Reference pressure for the sound pressure level** based on the fluid type:

- **Use reference pressure for air** to use a reference pressure of 20 μPa ($20\cdot10^{-6}$ Pa).
- **Use reference pressure for water** to use a reference pressure of 1 μPa ($1\cdot10^{-6}$ Pa).
- **User-defined reference pressure** to enter a reference pressure $p_{ref,\,SPL}$ (SI unit: Pa). The default value is the same as for air, 20 μPa.

DEPENDENT VARIABLES

This physics interface defines one dependent variable (field), the **Pressure** p. If required, edit the name, which changes both the field name and the dependent variable name. If the new field name coincides with the name of another pressure field in the model, the interfaces share degrees of freedom and dependent variable name. The new field name must not coincide with the name of a field of another type, or with a component name belonging to some other field.

DISCRETIZATION

To display additional settings beyond the shape function orders in this section, click the **Show More Options** button ( ) and select **Advanced Physics Options** in the **Show More Options** dialog box.

	• Domain, Boundary, Edge, Point, and Pair Nodes for the Pressure Acoustics, Frequency Domain Interface • Theory for Pressure Acoustics, Frequency Domain

	Eigenmodes of a Room: Application Library path **COMSOL_Multiphysics/Acoustics/eigenmodes_of_room**

Domain, Boundary, Edge, Point, and Pair Nodes for the Pressure Acoustics, Frequency Domain Interface

The Pressure Acoustics, Frequency Domain Interface has these domain, boundary, edge, point, and pair nodes, listed in alphabetical order, available from the **Physics** ribbon toolbar (Windows users), **Physics** context menu (macOS or Linux users), or by right-clicking to access the context menu (all users). Continuity in the total pressure is the default condition on interior boundaries.

	In general, to add a node, go to the **Physics** toolbar no matter what operating system you are using. Subnodes are available by clicking the parent node and selecting it from the **Attributes** menu.

- Axial Symmetry
- Continuity
- Cylindrical Wave Radiation
- Dipole Source
- Impedance
- Incident Pressure Field
- Interior Sound Hard Boundary (Wall)
- Initial Values
- Monopole Source
- Normal Acceleration
- Periodic Condition
- Plane Wave Radiation
- Pressure Acoustics
- Pressure
- Sound Hard Boundary (Wall)
- Sound Soft Boundary
- Spherical Wave Radiation
- Symmetry

For axisymmetric components, COMSOL Multiphysics takes the axial symmetry boundaries (at $r = 0$) into account and automatically adds an **Axial Symmetry** node to the component that is valid on the axial symmetry boundaries only.

See Table 2-4 for links to common sections and Table 2-5 for common feature nodes. You can also search for information: press F1 to open the **Help** window or Ctrl+F1 to open the **Documentation** window.

Pressure Acoustics

The **Pressure Acoustics** node adds the equations for time-harmonic and eigenfrequency acoustics modeling in the frequency domain. In the **Settings** window, define the properties for the acoustics model and model inputs including temperature.

PRESSURE ACOUSTICS MODEL

The default **Fluid model** for pressure acoustics is a **Linear elastic** fluid. By default, the values for the **Density** ρ (SI unit: kg/m^3) and the **Speed of sound** c (SI unit: m/s) are taken **From material**. For **User defined**, enter other values for these properties.

Sound Hard Boundary (Wall)

The **Sound Hard Boundary (Wall)** adds a boundary condition for a sound hard boundary or wall. This is a boundary where the normal component of the acceleration is zero, such that

$$-\mathbf{n}\cdot\left(-\frac{1}{\rho_0}(\nabla p-\mathbf{q}_d)\right) = 0$$

For zero dipole source and constant fluid density, this means that the normal derivative of the pressure is zero at the boundary

$$\frac{\partial p}{\partial \mathbf{n}} = 0$$

Sound-hard boundaries are available for all study types. Note that this condition is identical to the Symmetry condition.

Initial Values

The **Initial Values** node adds initial values for the sound pressure and the pressure time derivative that can serve as an initial guess for a nonlinear solver. If more than one initial value is needed, from the **Physics** toolbar click to add more **Initial Values** nodes.

INITIAL VALUES

Enter a value or expression for the initial values for the **Pressure** p (SI unit: Pa) and the **Pressure, first time derivative**, $\partial p/\partial t$ (SI unit: Pa/s). The defaults are 0 Pa and 0 Pa/s, respectively.

Monopole Source

Use the **Monopole Source** node to add the domain source term Q_{m} to the governing equation. A monopole source added to a domain has a uniform strength in all directions. In advanced models, this source term can, for example, be used to represent a domain heat source causing pressure variations. Add this node from the **More>** submenu.

MONOPOLE SOURCE

Enter a **Monopole source** Q_{m} (SI unit: $1/\mathrm{s}^2$). The default is 0 $1/\mathrm{s}^2$.

Dipole Source

Use the **Dipole Source** node to add the domain source term $\mathbf{q}_{\mathrm{d}}$ to the governing equation. This source is typically stronger in two opposite directions. In advanced models, this term can, for example, be used to represent a uniform constant background flow convecting the sound field. Add this node from the **More>** submenu.

DIPOLE SOURCE

Enter coordinates for the **Dipole source** $\mathbf{q}_{\mathrm{d}}$ (SI unit: $\mathrm{N/m}^3$). These are the individual components of the dipole source vector. The defaults are 0 $\mathrm{N/m}^3$.

Normal Acceleration

The **Normal Acceleration** adds an inward normal acceleration a_{n}:

$$-\mathbf{n}\cdot\left(-\frac{1}{\rho_0}(\nabla p-\mathbf{q}_d)\right) = a_{\mathrm{n}}$$

Alternatively, specify the acceleration $\mathbf{a}_0$ of the boundary. The part in the normal direction is used to define the boundary condition:

$$\mathbf{n}\cdot\left(-\frac{1}{\rho_0}(\nabla p-\mathbf{q}_d)\right) = \mathbf{n}\cdot\mathbf{a}_0$$

This feature represents an external source term. It can also be used to manually couple acoustics with a structural analysis for modeling acoustic-structure interaction.

NORMAL ACCELERATION

Select a **Type**—**Inward Acceleration** (the default) or **Acceleration**.

- For **Inward Acceleration**, enter the value of the **Inward acceleration** a_{n} (SI unit: $\mathrm{m/s}^2$). The default is 0 $\mathrm{m/s}^2$. Use a positive value for inward acceleration or a negative value for outward acceleration.
- For **Acceleration**, enter values for the components of the **Acceleration** $\mathbf{a}_0$ (SI unit: $\mathrm{m/s}^2$). The defaults are 0 $\mathrm{m/s}^2$.

Sound Soft Boundary

The **Sound Soft Boundary** adds a boundary condition for a sound soft boundary, where the acoustic pressure vanishes: $p = 0$. It is an appropriate approximation for a liquid-gas interface and in some cases for external waveguide ports.

CONSTRAINT SETTINGS

To display this section, click the **Show More Options** button ( ) and select **Advanced Physics Options** in the **Show More Options** dialog box.

Pressure

The **Pressure** node creates a boundary condition that acts as a pressure source at the boundary, which means a constant acoustic pressure p_0 is specified and maintained at the boundary: $p = p_0$. In the frequency domain, p_0 is the amplitude of a harmonic pressure source. The node is also available from the **Pairs** submenu as an option at interfaces between parts in an assembly.

PRESSURE

Enter the value of the **Pressure** p_0 (SI unit: Pa). The default is 0 Pa.

CONSTRAINT SETTINGS

To display this section, click the **Show More Options** button ( ) and select **Advanced Physics Options** in the **Show More Options** dialog box.

Impedance

The **Impedance** node adds an impedance boundary condition, which is a generalization of the sound-hard and sound-soft boundary conditions:

$$-\mathbf{n}\cdot\left(-\frac{1}{\rho_c}(\nabla p_\mathrm{t}-\mathbf{q}_\mathrm{d})\right) = -\frac{i\omega p_\mathrm{t}}{Z_i}$$

Here Z_i is the acoustic input impedance of the external domain and it has the unit of a specific acoustic impedance. From a physical point of view, the acoustic input impedance is the ratio between the local pressure and local normal particle velocity.

The Impedance boundary condition is a good approximation for a locally reacting surface—a surface for which the normal velocity at any point depends only on the pressure at that exact point.

In the two opposite limits $Z_i \to \infty$ and $Z_i \to 0$, this boundary condition is identical to the Sound Hard Boundary (Wall) condition and the Sound Soft Boundary condition, respectively.

IMPEDANCE

The **Impedance model** available is **User defined**.

Enter the value of the **Impedance** Z_i (SI unit: Pa·s/m). The default value is set to the specific impedance of air 1.2 kg/m^3·343 m/s.

Symmetry

The **Symmetry** node adds a boundary condition where there is symmetry in the pressure. Use this condition to reduce the size of a model by cutting it in half where there are symmetries. In pressure acoustics, this boundary condition is mathematically identical to the Sound Hard Boundary (Wall) condition.

Plane Wave Radiation

The **Plane Wave Radiation** node adds a radiation boundary condition for a plane wave. If required, from the **Physics** toolbar, add an Incident Pressure Field to model an incoming wave. This radiation condition allows an outgoing plane wave to leave the modeling domain with minimal reflections when the angle of incidence is near to normal.

The *plane wave* type is suitable for both far-field boundaries and ports. Because many waveguide structures are only interesting in the plane-wave region, it is particularly relevant for ports. When using the radiation condition on an open far-field boundary, it is recommended to construct the boundary such that the incidence angle is near to normal. This of course requires a priori knowledge of the problem and the solution.

- An estimate of the reflection coefficient R_s, for the spurious waves reflecting off the plane wave radiation boundary, is, for incident plane waves at angle θ, given by the expression:

$$R_s = \left|\frac{\cos\theta - 1}{\cos\theta + 1}\right|^N$$

  where N is the order of the boundary condition (here 1 or 2). So at normal incidence ($\theta = 0$) there are no spurious reflections, while at an incidence angle of 30^0 for $N = 2$ (plane wave radiation in the frequency domain), for example, the amplitude of the spurious reflected wave is 0.5% of the incident.

	Automotive Muffler: Application Library path **COMSOL_Multiphysics/Acoustics/automotive_muffler**

Spherical Wave Radiation

The **Spherical Wave Radiation** node adds a radiation boundary condition for a spherical wave, for which you define the source location. If required, from the **Physics** toolbar add an Incident Pressure Field to model an incoming wave. This radiation condition allows an outgoing spherical wave to leave the modeling domain with minimal reflections. The geometry of the modeling domain should be adapted to have the outgoing spherical waves coincide with the boundary. This is in order to minimize spurious reflections.

SPHERICAL WAVE RADIATION

Enter coordinates for the **Source location** r_0 (SI unit: m). The defaults are 0 m.

Cylindrical Wave Radiation

The **Cylindrical Wave Radiation** node adds a radiation boundary condition for a cylindrical wave, for which you define the source location and the source axis direction. If required, from the **Physics** toolbar, add an Incident Pressure Field to model an incoming wave. This radiation condition allows an outgoing cylindrical wave to leave the modeling domain with minimal reflections. The geometry of the modeling domain should be adapted to have the outgoing cylindrical waves coincide with the boundary. This is in order to minimize spurious reflections.

CYLINDRICAL WAVE RADIATION

Enter coordinates for the **Source location** r_0 (SI unit: m) (the defaults are 0 m) and the **Source axis** direction r_{axis} (dimensionless) (the defaults are 0).

Incident Pressure Field

The **Incident Pressure Field** node is a subnode to all nonreflecting boundary conditions (plane, cylindrical, or spherical wave radiation). From the **Physics** toolbar, add to Plane Wave Radiation, Spherical Wave Radiation, or Cylindrical Wave Radiation nodes. If the incident pressure field p_i is a predefined plane wave, it is of the type:

$$p_\mathrm{i} = p_0 e^{-i(\mathbf{k}\cdot\mathbf{r})} = p_0 e^{-ik_\mathrm{eq}\left(\frac{\mathbf{r}\cdot\mathbf{e}_k}{\|\mathbf{e}_k\|}\right)}$$

where p_0 is the wave amplitude, $\mathbf{k}$ is the wave vector (with amplitude $k_\mathrm{eq}=|\mathbf{k}|$ and wave direction vector $\mathbf{e}_k$), and $\mathbf{r}$ is the location on the boundary. The incident pressure field can also be a user-defined value or expression.

INCIDENT PRESSURE FIELD

From the **Incident pressure field type** list, select **Plane wave** to define an incident pressure field of plane wave type. Then enter a **Pressure amplitude** p_0 (SI unit: Pa) (the default is 0 Pa) and **Wave direction** $\mathbf{e}_k$ (SI unit: m).

Select **User defined** to enter the expression for the **Incident pressure field** p_i (SI unit: Pa) as a function of space. The default is 0 Pa.

Interior Sound Hard Boundary (Wall)

The **Interior Sound Hard Boundary (Wall)** node adds a boundary condition for a sound hard boundary or wall on interior boundaries. A sound-hard boundary is a boundary at which the normal component of the acceleration is zero:

$$-\mathbf{n}\cdot-\left(\frac{1}{\rho_c}(\nabla p_\mathrm{t}-\mathbf{q}_\mathrm{d})\right)_1 = 0 \qquad -\mathbf{n}\cdot\left(\left(-\frac{1}{\rho_c}\right)(\nabla p_\mathrm{t}-\mathbf{q}_\mathrm{d})\right)_2 = 0$$

where the subscripts 1 and 2 represent the two sides of the boundary. For zero dipole charge and constant fluid density, this means that the normal derivative of the pressure is zero at the boundary. On an interior sound hard boundary, the pressure is not continuous but is treated as a so-called slit feature.

Periodic Condition

The **Periodic Condition** node adds a periodic boundary condition that can be used to reduce the model size by using symmetries and periodicities in the geometry and physics interfaces being modeled. This feature works well for cases like opposing parallel boundaries. In other cases use a **Destination Selection** subnode to control the destination. By default it contains the selection that COMSOL Multiphysics identifies.

PERIODICITY SETTINGS

Select a **Type of periodicity**: **Continuity** (the default) or **Antiperiodicity**.

CONSTRAINT SETTINGS

To display this section, click the **Show More Options** button ( ) and select **Advanced Physics Options** in the **Show More Options** dialog box. This section contains settings for specifying the type of constraint and whether to use a pointwise or weak constraint. See Constraint Settings for more information.

ORIENTATION OF SOURCE

To display this section, click the **Show More Options** button ( ) and select **Advanced Physics Options** in the **Show More Options** dialog box. For information about the **Orientation of Source** section, see Orientation of Source and Destination.

Axial Symmetry

The **Axial Symmetry** node is a default node added for all 2D and 1D axisymmetric components. The boundary condition is active on all boundaries on the symmetry axis.

Continuity

Continuity is available as an option at interfaces between parts in a pair.

This condition gives continuity in total pressure and in the normal acceleration over the pair (subscripts 1 and 2 in the equation refer to the two sides in the pair):

$$-\mathbf{n}\cdot\left[-\left(\frac{1}{\rho_c}(\nabla p_\mathrm{t}-\mathbf{q}_\mathrm{d})\right)_1-\left(-\frac{1}{\rho_c}(\nabla p_\mathrm{t}-\mathbf{q}_\mathrm{d})\right)_2\right]=0$$

CONSTRAINT SETTINGS

To display this section, click the **Show More Options** button ( ) and select **Advanced Physics Options** in the **Show More Options** dialog box.

Theory for Pressure Acoustics, Frequency Domain

The Pressure Acoustics, Frequency Domain Interface is designed for the analysis of various types of pressure acoustics problems in the frequency domain, all concerning pressure waves in a fluid. An acoustics model can be part of a larger multiphysics model that describes, for example, the interactions between structures and acoustic waves. This physics interface is suitable for modeling acoustics phenomena that do not involve fluid flow.

This physics interface solves for the acoustic pressure, p. It is available in all space dimensions—for 3D, 2D, and 1D Cartesian geometries as well as for 2D and 1D axisymmetric geometries.

These studies are discussed briefly in this section:

- Frequency Domain Study
- Eigenfrequency Study
- References for the Pressure Acoustics, Frequency Domain Interface

Frequency Domain Study

The frequency domain—or time-harmonic—formulation uses the following inhomogeneous Helmholtz equation:

$$\nabla \cdot \left(-\frac{1}{\rho_c}(\nabla p - \mathbf{q}_d)\right) - \frac{\omega^2 p}{\rho_c c_c^{\,2}} = Q_m \tag{11-3}$$

In this equation, $p = p\,(\mathbf{x}, \omega)$ (the dependence on ω is henceforth not explicitly indicated). With this formulation you can compute the frequency response of a system for a number of frequencies. The default frequency domain study sets up a parametric sweep over a frequency range using a harmonic load.

When there is damping, ρ_c and c_c are complex-valued quantities.

Equation 11-3 is the equation that the software solves for 3D geometries. In lower-dimensional and axisymmetric cases, restrictions on the coordinate dependence mean that the equations differ from case to case. Here is a brief summary of the situation.

2D

In 2D, the pressure is of the form

$$p(\mathbf{r}) = p(x, y)e^{-ik_z z}$$

which, inserted in Equation 11-3, gives

$$\nabla \cdot \left(-\frac{1}{\rho_c}(\nabla p - \mathbf{q}_d)\right) - \frac{1}{\rho_c}\left(\frac{\omega^2}{c_c^2} - k_z^2\right)p = Q_m \tag{11-4}$$

The *out-of-plane wave number*, k_z, can be set on the Pressure Acoustics page. By default its value is 0. In the mode analysis type, $-ik_z$ is used as the eigenvalue.

2D AXISYMMETRY

For 2D axisymmetric geometries, the independent variables are the radial coordinate, r, and the axial coordinate, z. The only dependence allowed on the azimuthal coordinate, φ, is through a phase factor,

$$p(r, \phi, z) = p(r, z)e^{-im\varphi} \tag{11-5}$$

where m denotes the *circumferential wave number*. Because the azimuthal coordinate is periodic, m must be an integer. Just like k_z in the 2D case, m can be set on the Settings window for Pressure Acoustics.

As a result of Equation 11-5, the equation to solve for the acoustic pressure in 2D axisymmetric geometries becomes

$$\frac{\partial}{\partial r}\left[-\frac{r}{\rho_c}\left(\frac{\partial p}{\partial r}-q_r\right)\right]+r\frac{\partial}{\partial z}\left[-\frac{1}{\rho_c}\left(\frac{\partial p}{\partial z}-q_z\right)\right]-\left[\left(\frac{\omega}{c_c}\right)^2-\left(\frac{m}{r}\right)^2\right]\frac{rp}{\rho_c} = rQ_m$$

1D AXISYMMETRY

In 1D axisymmetric geometries,

$$p(r,\phi,z) = p(r)e^{-i(k_z z+m\varphi)}$$

leading to the radial equation

$$\frac{\partial}{\partial r}\left[-\frac{r}{\rho_c}\left(\frac{\partial p}{\partial r}-q_r\right)\right]-\left[\left(\frac{\omega}{c_c}\right)^2-\left(\frac{m}{r}\right)^2-k_z^2\right]\frac{rp}{\rho_c} = rQ_m$$

where both the circumferential wave number m, and the *axial wave number* k_z, appear as parameters.

1D

The equation for the 1D case is obtained by taking the pressure to depend on a single Cartesian coordinate, x:

$$\frac{d}{dx}\left(-\frac{1}{\rho_c}\left(\frac{dp}{dx}-q_{\mathrm{d}}\right)\right)-\frac{\omega^2}{\rho_c c_c^2}p = Q_m$$

Eigenfrequency Study

In the eigenfrequency formulation, the source terms are absent, and the eigenmodes and eigenfrequencies are solved for:

$$\nabla\cdot\left(-\frac{1}{\rho_c}\nabla p\right)+\frac{\lambda^2 p}{\rho_c c^2} = 0 \tag{11-6}$$

The eigenvalue λ introduced in this equation is related to the eigenfrequency f and the angular frequency ω, through $\lambda = i2\pi f = i\omega$. Because they are independent of the pressure, the solver ignores any dipole and monopole sources unless a coupled eigenvalue problem is being solved.

Equation 11-6 applies to the 3D case. The equations solved in eigenfrequency studies in lower dimensions and for axisymmetric geometries are obtained from their time-harmonic counterparts, given in the previous subsection, by the substitution $\omega^2 \rightarrow -\lambda^2$.

Switch between specifying the eigenvalues, the eigenfrequencies, or the angular frequencies by selecting from the Eigenvalue transformation list in the solver sequence's Settings window for Eigenvalue.

References for the Pressure Acoustics, Frequency Domain Interface

1. D. Givoli and B. Neta, "High-order Non-reflecting Boundary Scheme for Time-dependent Waves", *J. Comput. Phys.*, vol. 186, pp. 24–46, 2004.

2. A. Bayliss, M. Gunzburger, and E. Turkel, "Boundary Conditions for the Numerical Solution of Elliptic Equations in Exterior Regions", *SIAM J. Appl. Math.*, vol. 42, no. 2, pp. 430–451, 1982.

3. A.B. Bauer, "Impedance Theory and Measurements on Porous Acoustic Liners", *J. Aircr.*, vol. 14, pp. 720–728, 1977.

4. S. Temkin, *Elements of Acoustics*, Acoustical Society of America, 2001.

12

The Chemical Species Transport Interfaces

This chapter explains how to use the Transport of Diluted Species interface, found under the **Chemical Species Transport** branch ( ) when adding a physics interface. The Transport of Diluted Species physics interface is used to model and simulate mass transfer by diffusion and convection based on Fick's law of diffusion. The interface is also used in the Reacting Flow, Diluted Species multiphysics interface, which solves for coupled mass transport and fluid flow.

In this chapter:

- Theory for Transport of Diluted Species
- The Transport of Diluted Species Interface
- The Reacting Flow, Diluted Species Multiphysics Interface

Theory for Transport of Diluted Species

The Transport of Diluted Species Interface provides a predefined modeling environment for studying the evolution of chemical species transported by diffusion and convection. The physics interface assumes that all species present are dilute; that is, that their concentration is small compared to a solvent fluid or solid. As a rule of thumb, a mixture containing several species can be considered dilute when the concentration of the solvent is more than 90 mol%. Due to the dilution, mixture properties such as density and viscosity can be assumed to correspond to those of the solvent.

When studying mixtures that are not dilute, the mixture and transport properties depend on the composition, and a different physics interface is recommended. See The Transport of Concentrated Species Interface for more information.

Fick's law governs the diffusion of the solutes, dilute mixtures, or solutions, while the phenomenon of ionic migration is sometimes referred to as *electrokinetic flow*. The Transport of Diluted Species interface supports the simulations of chemical species transport by convection, migration, and diffusion in 1D, 2D, and 3D as well as for axisymmetric components in 1D and 2D.

In this section:

- Adding Transport Through Migration
- Convective Term Formulation
- Crosswind Diffusion
- Danckwerts Inflow Boundary Condition
- Equilibrium Reaction Theory
- Mass Balance Equation
- Mass Sources for Species Transport
- Solving a Diffusion Equation Only
- Supporting Electrolytes
- References

Note: Some features explained in this section require certain add-on modules. For details see https://www.comsol.com/products/specifications/

The section also includes the theory for The Transport of Diluted Species in Porous Media Interface:

- Adsorption
- Convection in Porous Media
- Diffusion in Porous Media
- Dispersion
- Mass Balance Equation for Transport of Diluted Species in Porous Media
- Mass Transport in Fractures
- Reactions

Mass Balance Equation

The default node attributed to the Transport of Diluted Species interface models chemical species transport through diffusion and convection and solves the mass conservation equation for one or more chemical species i:

$$\frac{\partial c_i}{\partial t} + \nabla \cdot \mathbf{J}_i + \mathbf{u} \cdot \nabla c_i = R_i \tag{12-1}$$

Equation 12-1 in its form above includes the transport mechanisms diffusion and convection. If *Migration in Electric Field* is activated (only available in some add-on products), the migration mechanism will be added to the equation as well. See more details in the section Adding Transport Through Migration.

- c_i is the concentration of the species (SI unit: mol/m^3)
- D_i denotes the diffusion coefficient (SI unit: m^2/s)
- R_i is a reaction rate expression for the species (SI unit: mol/(m^3·s))
- $\mathbf{u}$ is the mass averaged velocity vector (SI unit: m/s)
- $\mathbf{J}_i$ is the mass flux diffusive flux vector (SI unit: mol/(m^2·s))

The mass flux relative to the mass averaged velocity, $\mathbf{J}_i$ (SI unit: mol/(m^2·s)), is associated with the mass balance equation above and used in boundary conditions and flux computations. The Transport of Diluted Species interface always includes mass transport due to molecular diffusion. In this case the mass flux $\mathbf{J}_i$ defines the diffusive flux vector

$$\mathbf{J}_i = -D\nabla c \tag{12-2}$$

An input field for the diffusion coefficient is available.

When *Migration in Electric Fields* is activated, the migration term is also added to the diffusive flux vector as shown in the section Adding Transport Through Migration.

The third term on the left side of Equation 12-1 describes the convective transport due to a velocity field $\mathbf{u}$. This field can be expressed analytically or obtained from coupling the physics interface to one that solves for fluid flow, such as *Laminar Flow*. Note that all fluid flow interfaces solve for the mass averaged velocity.

On the right-hand side of the mass balance equation (Equation 12-1), R_i represents a source or sink term, typically due to a chemical reaction or desorption on a porous matrix. To specify R_i, another node must be added to the Transport of Diluted Species interface — the **Reaction** node for example, which includes an input field for specifying a reaction expression using the variable names of all participating species.

Equilibrium Reaction Theory

The feature Equilibrium Reaction is described in this section. A chemical equilibrium reaction system is defined by the stoichiometry of the reaction and the relation between the chemical activities of the chemical species participating in the reaction (the equilibrium condition).

The kinetics of the reaction is so fast that the equilibrium condition is fulfilled at all times in all space coordinates.

The equilibrium condition is commonly based on the stoichiometric coefficients, ν_i (dimensionless), of the reaction; the species activities of the reacting species a_i (dimensionless); and an equilibrium constant, K_{eq} (1) according to:

$$K_{\mathrm{eq}} = \frac{\prod_{i \in \text{ products}} a_i^{\nu_i}}{\prod_{i \in \text{ reactants}} a_i^{-\nu_i}}$$

where the species activities are defined as

$$a_i = \gamma_{c,i}\frac{c_i}{c_{\mathrm{a0}}}$$

where c_{a0} (SI unit: mol/m^3) is the standard molarity, and $\gamma_{c,i}$ (dimensionless) an activity coefficient.

Defining the stoichiometric coefficients positive for products and negative for reactants, the above equilibrium condition can also be written:

$$K_{\mathrm{eq}} = \prod_i a_i^{\nu_i}$$

The Equilibrium Reaction node solves for a reaction rate so that the equilibrium condition is always fulfilled in the domain. It is available for the Modules Chemical Engineering, Corrosion, Electrochemistry, Electrodeposition, and Batteries and Fuel Cells

	$\gamma_{c,i}$ is set to unity when the Equilibrium constant is selected on the Settings window. For nonunity activity coefficients, a user defined equilibrium condition can be used.

EQUILIBRIUM REACTIONS AND INFLOW BOUNDARY CONDITIONS

Contradictory constraints arise if the boundary conditions for concentrations or activities are set so that the domain equilibrium condition is not fulfilled. Special treatment is therefore needed at Inflow boundaries, where the concentrations are set for all species in the mass transport interfaces.

One way of avoiding competing constraints on an inflow boundary is to add an additional reaction coordinate degree of freedom, solved for to create a set of modified inflow concentrations that fulfill the domain equilibrium condition. The reaction coordinate gives rise to a concentration shift, which is the offset to the inflow concentrations provided by the user. The shift for each species obeys the stoichiometry of the reaction and the equilibrium expression. The modified inflow concentrations are then used in the boundary conditions for the domain mass transport equations. The resulting modified inflow concentrations can be seen as the stationary solution for a batch reactor with the user inflow concentrations as initial concentrations. In addition, the domain reaction rate degree of freedom of the equilibrium reaction is constrained to zero on all Inflow boundaries.

EQUILIBRIUM REACTIONS AND CONCENTRATION BOUNDARY CONDITIONS

No special treatment is made with regards to input concentration values of the Concentration boundary node. Using this feature, you can explicitly set one or a set of concentrations, and the equilibrium condition acts on the rest of the concentrations. However, there is no solution to the problem if more concentrations than the number of species minus the number of equilibrium reactions are set using this feature.

EQUILIBRIUM REACTIONS AND TIME-DEPENDENT SIMULATIONS

Spurious oscillations may occur in a time-dependent problem if the initial conditions do not fulfill the equilibrium condition. Since equilibrium reactions are assumed to be infinitely fast, the solution is to initialize the problem using an additional study step, solving for a stationary problem with all nonequilibrium reaction rates set to zero. Manual scaling of the reaction rate dependent variables is needed in this study step.

Convective Term Formulation

The default node attributed to The Transport of Diluted Species Interface assumes chemical species transport through diffusion and convection (depending on the modules licensed, a check box to activate migration is available) and implements the mass balance equation in Equation 12-1.

There are two ways to present a mass balance where chemical species transport occurs through diffusion and convection. These are the nonconservative and conservative formulations of the convective term:

$$\text{nonconservative: } \frac{\partial c}{\partial t} + \mathbf{u} \cdot \nabla c = \nabla \cdot \mathbf{J}_i + R \tag{12-3}$$

$$\text{conservative: } \frac{\partial c}{\partial t} + \nabla \cdot (c\mathbf{u}) = \nabla \cdot \mathbf{J}_i + R \tag{12-4}$$

and each is treated slightly differently by the solver algorithms. In these equations $\mathbf{J}_i$ (SI unit: mol/(m^2·s)) is the diffusive flux vector, R (SI unit: mol/(m^3·s)) is a production or consumption rate expression, and $\mathbf{u}$ (SI unit: m/s) is the solvent velocity field. The diffusion process can be anisotropic, in which case D is a tensor.

If the conservative formulation is expanded using the chain rule, then one of the terms from the convection part, $c\nabla\cdot\mathbf{u}$, would equal zero for an incompressible fluid and would result in the nonconservative formulation above. This is in fact the default formulation in this physics interface. To switch between the two formulations, click the **Show** button ( ) and select **Advanced Physics Options**.

Solving a Diffusion Equation Only

Remove the convection term from Equation 12-3 and Equation 12-4 by clearing the Convection check box in the Transport Mechanisms section for The Transport of Diluted Species Interface. The equation then becomes

$$\frac{\partial c}{\partial t} = \nabla \cdot \mathbf{J}_i + R$$

Mass Sources for Species Transport

Note: The features below are only available in a limited set of add-on products. For a detailed overview of which features are available in each product, visit
https://www.comsol.com/products/specifications/

There are two types of mass sources in the Transport of Diluted Species interface: point sources and line sources.

POINT SOURCE

A point source is theoretically formed by assuming a mass injection/ejection, $\dot{Q}_c$ (SI unit: mol/(m^3·s)), in a small volume δV and then letting the size of the volume tend to zero while keeping the total mass flux constant. Given a point source strength, $\dot{q}_{p,c}$ (SI unit: mol/s), this can be expressed as

$$\lim_{\delta V \to 0} \int_{\delta V} \dot{Q}_c = \dot{q}_{p,c} \tag{12-5}$$

An alternative way to form a point source is to assume that mass is injected/extracted through the surface of a small object. Letting the object surface area tend to zero while keeping the mass flux constant results in the same point source. For this alternative approach, effects resulting from the physical object's volume need to be neglected.

The weak contribution

$$\dot{q}_{p,c}\text{test}(c)$$

is added at a point in the geometry. As can be seen from Equation 12-5, $\dot{Q}_c$ must tend to plus or minus infinity as δV tends to zero. This means that in theory the concentration also tends to plus or minus infinity.

Observe that "point" refers to the physical representation of the source. A point source can therefore only be added to points in 3D components and to points on the symmetry axis in 2D axisymmetry components. Other geometrical points in 2D components represent physical lines.

The finite element representation of Equation 12-5 corresponds to a finite concentration at a point with the effect of the point source spread out over a region around the point. The size of the region depends on the mesh and on the strength of the source. A finer mesh gives a smaller affected region but also a more extreme concentration value. It is important not to mesh too finely around a point source since this can result in unphysical concentration values. It can also have a negative effect on the condition number for the equation system.

LINE SOURCE

A line source can theoretically be formed by assuming a source of strength $\dot{Q}_{\mathrm{l,c}}$ (SI unit: mol/(m^3·s)), located within a tube with cross section δS and then letting δS tend to zero while keeping the total mass flux per unit length constant. Given a line source strength, $\dot{q}_{\mathrm{l,c}}$ (SI unit: mol/(m·s)), this can be expressed as

$$\lim_{\delta S \to 0} \int_{\delta S} \dot{Q}_{\mathrm{l,c}} = \dot{q}_{\mathrm{l,c}} \tag{12-6}$$

As in the point source case, an alternative approach is to assume that mass is injected/extracted through the surface of a small object. This results in the same mass source, but requires that effects resulting from the physical object's volume are neglected.

The weak contribution

$$\dot{q}_{\mathrm{l,c}}\mathrm{test}(c)$$

is added on lines in 3D or at points in 2D (which represent cut-through views of lines). Line sources can also be added on the axisymmetry line in 2D axisymmetry components. It cannot, however, be added on geometrical lines in 2D since those represent physical planes.

As with a point source, it is important not to mesh too finely around the line source.

	For feature node information, see Line Mass Source and Point Mass Source.

Adding Transport Through Migration

Note: Migration is only available in a limited set of add-on products. For a detailed overview of which features are available in each product, visit https://www.comsol.com/products/specifications/

In addition to transport due to convection and diffusion, the Transport of Diluted Species interface supports ionic species transport by *migration*. This is done by selecting the Migration in Electric Field check box under the Transport Mechanisms section for the physics interface. The mass balance then becomes:

$$\frac{\partial c_i}{\partial t} + \nabla \cdot (-D_i \nabla c_i - z_i u_{\mathrm{m},i} F c_i \nabla V + c_i \mathbf{u}) = R_i \tag{12-7}$$

where

- c_i (SI unit: mol/ m^3) denotes the concentration of species i
- D_i (SI unit: m^2/s) is the diffusion coefficient of species i
- $\mathbf{u}$ (SI unit: m/s) is the fluid velocity

- F (SI unit: A·s/mol) refers to Faraday's constant
- V (SI unit: V) denotes the electric potential
- z_i (dimensionless) is the charge number of the ionic species, and
- $u_{\mathrm{m},i}$ (SI unit: mol·s/kg) is its ionic mobility

In this case the diffusive flux vector is

$$\mathbf{J}_i = -D_i \nabla c_i - z_i u_{\mathrm{m},i} F c_i \nabla V$$

The velocity, $\mathbf{u}$, can be a computed fluid velocity field from a Fluid Flow interface or a specified function of the spatial variables x, y, and z. The potential can be provided by an expression or by coupling the system of equations to a current balance, such as the Electrostatics interface. Sometimes it is assumed to be a supporting electrolyte present, which simplifies the transport equations. In that case, the modeled charged species concentration is very low compared to other ions dissolved in the solution. Thus, the species concentration does not influence the solution's conductivity and the net charge within the fluid.

The Nernst-Einstein relation can in many cases be used for relating the species mobility to the species diffusivity according to

$$u_{m,i} = \frac{D_i}{RT}$$

where R (SI unit: J/(mol·K)) is the molar gas constant and T (SI unit: K) is the temperature.

Note: In the *Nernst-Planck Equations* interface, the ionic species contribute to the charge transfer in the solution. It includes an *electroneutrality condition* and also computes the electric potential field in the electrolyte. For more information, see Theory for the Nernst-Planck Equations Interface. This interface is included in the Chemical Reaction Engineering Module.

Supporting Electrolytes

In *electrolyte* solutions, a salt can be added to provide a high electrolyte conductivity and decrease the ohmic losses in a cell. These solutions are often called *supporting electrolytes*, buffer solutions, or carrier electrolytes. The added species, a negative and a positive ion pair, predominates over all other species. Therefore, the supporting electrolyte species can be assumed to dominate the current transport in the solution. In addition, the predominant supporting ions are usually selected so that they do not react at the electrode surfaces since the high conductivity should be kept through the process, that is, they should not be electro-active species. This also means that the concentration gradients of the predominant species in a supporting electrolyte are usually negligible.

Modeling and solving for a supporting electrolyte in the *Electrostatics* or *Secondary Current Distribution* interfaces will give a potential distribution that drives the migration in the Transport of Diluted Species Interface.

The current density vector is proportional to the sum of all species fluxes as expressed by Faraday's law:

$$\mathbf{i} = F \sum_i z_i \mathbf{N}_i$$

The electroneutrality condition ensures that there is always a zero net charge at any position in a dilute solution. Intuitively, this means that it is impossible to create a current by manually pumping positive ions in one direction and negative ions in the other. Therefore, the convective term is canceled out to yield the following expression for the electrolyte current density, where j denotes the supporting species:

$$\mathbf{i} = F\sum_j -z_j^2 u_{\mathrm{m},j} F c_j \nabla\phi \tag{12-8}$$

Equation 12-8 is simply Ohm's law for ionic current transport and can be simplified to

$$\mathbf{i} = -\kappa\nabla\phi \tag{12-9}$$

where κ is the conductivity of the supporting electrolyte. A current balance gives the current and potential density in the cell

$$\nabla\cdot\mathbf{i} = 0$$

which, in combination with Equation 12-9, yields:

$$\nabla\cdot(-\kappa\nabla\phi) = 0 \tag{12-10}$$

Equation 12-10 can be easily solved using the Electrostatics or Secondary Current Distribution interface and, when coupled to the Transport in Diluted Species interface, the potential distribution shows up in the migration term.

Crosswind Diffusion

Transport of diluted species applications can often result in models with a very high cell Péclèt number — that is, systems where convection or migration dominates over diffusion. Streamline diffusion and crosswind diffusion are of paramount importance to obtain physically reasonable results. The Transport of Diluted Species interface provides two crosswind diffusion options using different formulations. Observe that crosswind diffusion makes the equation system nonlinear even if the transport equation is linear.

DO CARMO AND GALEÃO

This is the formulation described in Numerical Stabilization in the *COMSOL Multiphysics Reference Manual*. The method reduces over- and undershoots to a minimum, even for anisotropic meshes.

In some cases, the resulting nonlinear equation system can be difficult to converge. This can happen when the cell Péclèt number is very high and the model contains many thin layers, such as contact discontinuities. You then have three options:

- Refine the mesh, especially in regions with thin layers.
- Use a nonlinear solver with a constant damping factor less than one.
- Switch to the Codina crosswind formulation.

CODINA

The Codina formulation is described in Ref. 1. It adds diffusion strictly in the direction orthogonal to the streamline direction. Compared to the do Carmo and Galeão formulation, the Codina formulation adds less diffusion but is not as efficient at reducing over- and undershoots. It also does not work as well for anisotropic meshes. The advantage is that the resulting nonlinear system is easier to converge and that underresolved gradients are less smeared out.

Danckwerts Inflow Boundary Condition

Constraining the composition to fixed values at an inlet to a reactor may sometimes result in issues with unreasonably high reaction rates or singularities at the inlet boundary. These problems may many times be mitigated by using a flux boundary condition instead, based on the upstream concentrations and the fluid velocity at the boundary. In chemical engineering, this type of flux boundary condition is also known as a Danckwerts condition.

Use the Danckwerts condition to specify inlet conditions for domains where high reaction rates are anticipated in the vicinity to the inlet (Ref. 2).

Given an upstream concentration $c_{i,0}$, the Danckwerts inflow boundary condition prescribed the total flux as

$$\mathbf{n} \cdot (\mathbf{J}_i + \mathbf{u}c_i) = \mathbf{n} \cdot (\mathbf{u}c_{i,0}) \tag{12-11}$$

Mass Balance Equation for Transport of Diluted Species in Porous Media

VARIABLY SATURATED POROUS MEDIA

The following equations for the molar concentrations, c_i, describe the transport of solutes in a variably saturated porous medium for the most general case, when the pore space is primarily filled with liquid but also contain pockets or immobile gas:

$$\begin{aligned}\frac{\partial}{\partial t}(\theta c_i) + \frac{\partial}{\partial t}(\rho c_{\mathrm{P},i}) + \frac{\partial}{\partial t}(a_{\mathrm{v}} c_{\mathrm{G},i}) + \mathbf{u} \cdot \nabla c_i = \\ \nabla \cdot [(D_{\mathrm{D},i} + D_{\mathrm{e},i})\nabla c_i] + R_i + S_i\end{aligned} \tag{12-12}$$

On the left-hand side of Equation 12-12, the first three terms correspond to the accumulation of species within the liquid, solid, and gas phases, while the last term describes the convection due to the velocity field $\mathbf{u}$ (SI unit: m/s).

In Equation 12-12 c_i denotes the concentration of species i in the liquid (SI unit: mol/m^3), $c_{\mathrm{P},i}$ the amount adsorbed to solid particles (moles per unit dry weight of the solid), and $c_{\mathrm{G},i}$ the concentration of species i in the gas phase.

The equation balances the mass transport throughout the porous medium using the porosity ε_{p}, the liquid volume fraction θ; the matrix (drained) density, $\rho = (1 - \varepsilon_{\mathrm{p}})\rho_{\mathrm{p}}$, and the solid phase density ρ_{p}.

For saturated porous media, the liquid volume fraction θ is equal to the porosity ε_{p}, but for partially saturated porous media, they are related by the saturation s as $\theta = s\varepsilon_{\mathrm{p}}$. The resulting gas volume fraction is $a_{\mathrm{v}} = \varepsilon_{\mathrm{p}} - \theta = (1\text{-}s)\varepsilon_{\mathrm{p}}$.

On the right-hand side of Equation 12-12, the first term introduces the spreading of species due to mechanical mixing resulting from the porous media (dispersion), as well as from diffusion and volatilization to the gas phase. The dispersion tensor is denoted D_{D} (SI unit: m^2/s) and the effective diffusion by D_{e} (SI unit: m^2/s).

The last two terms on the right-hand side of Equation 12-12 describe production or consumption of the species; R_i is a reaction rate expression which can account for reactions in the liquid, solid, or gas phase, and S_i is an arbitrary source term, for example due to a fluid flow source or sink.

Adsorption

The time evolution of the adsorption, the solute transport to or from the solid phase, is defined by assuming that the amount of solute adsorbed to the solid, $c_{\mathrm{P},i}$, is a function of the concentration in the fluid c_i. This implies that the solute concentration in the liquid and solid phase are in instant equilibrium. The adsorption term can be expanded to give

$$\frac{\partial}{\partial t}(\rho c_{\mathrm{P},i}) = \rho\frac{\partial c_{\mathrm{P},i}}{\partial c_i}\frac{\partial c_i}{\partial t} - \rho c_{\mathrm{P},i}\frac{\partial \varepsilon_{\mathrm{P}}}{\partial t} = \rho K_{\mathrm{P},i}\frac{\partial c_i}{\partial t} - \rho c_{\mathrm{P},i}\frac{\partial \varepsilon_{\mathrm{P}}}{\partial t} \tag{12-13}$$

where $k_{\mathrm{P},i} = \partial c_{\mathrm{P},i}/\partial c_i$ is the adsorption isotherm.

Volatilization

Volatilization is the process where a solute species in the liquid is transported to the gas phase due to vaporization. Assuming that the amount of solute in the gas phase, $c_{G,i}$, is a linear function of the liquid phase concentration, the volatilization term is defined as

$$\frac{\partial}{\partial t}a_v c_{G,i} = a_v \frac{\partial c_{G,i}}{\partial c_i}\frac{\partial c_i}{\partial t} + k_{G,i} c_i \frac{\partial a_v}{\partial t} = a_v k_{G,i}\frac{\partial c_i}{\partial t} + k_{G,i} c_i \frac{\partial a_v}{\partial t} \tag{12-14}$$

where $k_{G,i} = \partial c_{G,i}/\partial c_i$ is the linear volatilization.

SATURATED POROUS MEDIA

In the case of transport in a saturated porous medium, $\theta = \varepsilon_p$, and the governing equations are

$$\frac{\partial}{\partial t}(\varepsilon_p c_i) + \frac{\partial}{\partial t}(\rho c_{P,i}) + \mathbf{u}\cdot\nabla c_i = \nabla\cdot[(D_{D,i} + D_{e,i})\nabla c_i] + R_i + S_i \tag{12-15}$$

Convection in Porous Media

Convection (also called advection) describes the movement of a species, such as a pollutant, with the bulk fluid velocity. The velocity field $\mathbf{u}$ corresponds to a superficial volume average over a unit volume of the porous medium, including both pores and matrix. This velocity is sometimes called *Darcy velocity*, and defined as volume flow rates per unit cross section of the medium. This definition makes the velocity field continuous across the boundaries between porous regions and regions with free flow.

	The velocity field to be used in the Model Inputs section on the physics interface can, for example, be prescribed using the velocity field from a Darcy's Law or a Brinkman Equations interface.

The average linear fluid velocities $\mathbf{u}_a$, provides an estimate of the fluid velocity within the pores:

$$\mathbf{u}_a = \frac{\mathbf{u}}{\varepsilon_p} \qquad \text{Saturated}$$

$$\mathbf{u}_a = \frac{\mathbf{u}}{\theta} \qquad \text{Partially saturated}$$

where ε_p is the porosity and $\theta = s\varepsilon_p$ the liquid volume fraction, and s the saturation, a dimensionless number between 0 and 1.

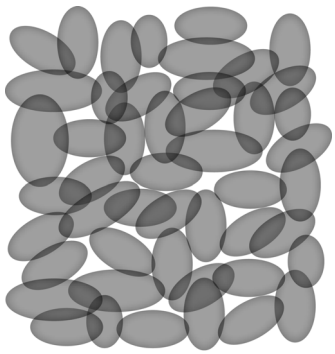

Figure 12-1: A block of a porous medium consisting of solids and the pore space between the solid grains. The average linear velocity describes how fast the fluid moves within the pores. The Darcy velocity attributes this flow over the entire fluid-solid face.

CONVECTIVE TERM FORMULATION

The Transport of Diluted Species in Porous Media interface includes two formulations of the convective term. The conservative formulation of the species equations in Equation 12-12 is written as:

$$\frac{\partial}{\partial t}(\theta c_i) + \frac{\partial}{\partial t}(\rho_b c_{P,i}) + \frac{\partial}{\partial t}(a_v c_{G,i}) + \nabla \cdot \mathbf{u} c_i = \nabla \cdot [(D_{D,i} + D_{e,i})\nabla c_i] + R_i + S_i \tag{12-16}$$

If the conservative formulation is expanded using the chain rule, then one of the terms from the convection part, $c_i \nabla \cdot \mathbf{u}$, would equal zero for an incompressible fluid and would result in the nonconservative formulation described in Equation 12-12.

When using the nonconservative formulation, which is the default, the fluid is assumed incompressible and divergence free: $\nabla \cdot \mathbf{u} = 0$. The nonconservative formulation improves the stability of systems coupled to a momentum equation (fluid flow equation).

	To switch between the two formulations, click the **Show** button ( ) and select **Advanced Physics Options**. In the section **Advanced Settings** select either **Nonconservative form** (the default) or **Conservative form**. The conservative formulation should be used for compressible flow.

Diffusion in Porous Media

The effective diffusion in porous media, D_e, depends on the structure of the porous material and the phases involved. Depending on the transport of diluted species occurs in free flow, saturated or partially saturated porous media, the effective diffusivity is defined as:

$$D_e = D_F \qquad \text{Free Flow}$$

$$D_e = \frac{\varepsilon_p}{\tau_L} D_L \qquad \text{Saturated Porous Media}$$

$$D_e = \frac{\theta}{\tau_L} D_L \qquad \text{Partially Saturated Porous Media}$$

$$D_e = \frac{\theta}{\tau_L} D_L + \frac{a_v}{\tau_G} k_G D_G \qquad \text{Partially Saturated with Volatilization}$$

Here D_F, D_L, and D_G are the single-phase diffusion coefficients for the species diluted in fluid, pure liquid, and gas phases, respectively (SI unit: m^2/s), and τ_F, τ_L, and τ_G are the corresponding tortuosity factors (dimensionless).

The tortuosity factor accounts for the reduced diffusivity due to the fact that the solid grains impede Brownian motion. The interface provides predefined expressions to compute the tortuosity factors in partially saturated porous media according to the Millington and Quirk model (Ref. 12):

$$\tau_L = \theta^{-7/3}\varepsilon^2, \ \tau_G = a_v^{-7/3}\varepsilon^2$$

and Bruggeman model

$$\tau_L = \theta^{-5/2}\varepsilon^2, \ \tau_G = a_v^{-5/2}\varepsilon^2$$

For saturated porous media $\theta = \varepsilon_p$. The fluid tortuosity for the Millington and Quirk model is

$$\tau_L = \varepsilon_p^{-1/3}$$

and for the Bruggeman model the tortuosity is defined as

$$\tau_L = \varepsilon_p^{-1/2}$$

User defined expressions for the tortuosity factor can also be applied.

Dispersion

The contribution of dispersion to the mixing of species typically overshadows the contribution from molecular diffusion, except when the fluid velocity is very small.

The spreading of mass, as species travel through a porous medium is caused by several contributing effects. Local variations in fluid velocity lead to mechanical mixing referred to as dispersion occurs because the fluid in the pore space flows around solid particles, so the velocity field varies within pore channels. The spreading in the direction parallel to the flow, or *longitudinal dispersivity*, typically exceeds the *transverse dispersivity* from up to an order of magnitude. Being driven by the concentration gradient alone, molecular diffusion is small relative to the mechanical dispersion, except at very low fluid velocities.

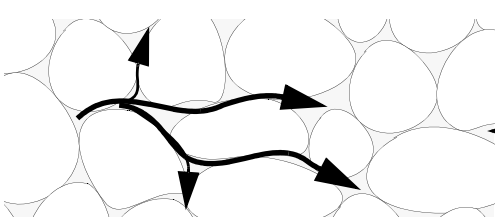

Figure 12-2: Spreading of fluid around solid particles in a porous medium.

is controlled through the dispersion tensor D_D. The tensor components can either be given by user-defined values or expressions, or derived from the directional dispersivities.

Using the longitudinal and transverse dispersivities in 2D, the dispersivity tensor components are (Ref. 9):

$$D_{Dii} = \alpha_L \frac{u_i^2}{|\mathbf{u}|} + \alpha_T \frac{u_j^2}{|\mathbf{u}|}$$

$$D_{Dij} = D_{Dji} = (\alpha_L - \alpha_T)\frac{u_i u_j}{|\mathbf{u}|}$$

In these equations, $D_{\mathrm{D}ii}$ (SI unit: m^2/s) are the principal components of the dispersivity tensor, and $D_{\mathrm{D}ji}$ and $D_{\mathrm{D}ji}$ are the cross terms. The parameters α_L and α_T (SI unit: m) specify the longitudinal and transverse dispersivities; and u_i (SI unit: m/s) stands for the velocity field components.

In order to facilitate modeling of stratified porous media in 3D, the tensor formulation by Burnett and Frind (Ref. 10) can be used. Consider a transverse isotropic media, where the strata are piled up in the z direction, the dispersivity tensor components are:

$$
\begin{aligned}
D_{\mathrm{L}xx} &= \alpha_1\frac{u^2}{|\mathbf{u}|} + \alpha_2\frac{v^2}{|\mathbf{u}|} + \alpha_3\frac{w^2}{|\mathbf{u}|}\\
D_{\mathrm{L}yy} &= \alpha_1\frac{v^2}{|\mathbf{u}|} + \alpha_2\frac{u^2}{|\mathbf{u}|} + \alpha_3\frac{w^2}{|\mathbf{u}|}\\
D_{\mathrm{L}zz} &= \alpha_1\frac{w^2}{|\mathbf{u}|} + \alpha_3\frac{u^2}{|\mathbf{u}|} + \alpha_3\frac{v^2}{|\mathbf{u}|}\\
D_{\mathrm{L}xy} &= D_{\mathrm{L}yx} = (\alpha_1 - \alpha_2)\frac{uv}{|\mathbf{u}|}\\
D_{\mathrm{L}xz} &= D_{\mathrm{L}zx} = (\alpha_1 - \alpha_3)\frac{uw}{|\mathbf{u}|}\\
D_{\mathrm{L}yz} &= D_{\mathrm{L}zy} = (\alpha_1 - \alpha_3)\frac{vw}{|\mathbf{u}|}
\end{aligned}
\tag{12-17}
$$

In Equation 12-17 the fluid velocities u, v, and w correspond to the components of the velocity field $\mathbf{u}$ in the x, y, and z directions, respectively, and α_1 (SI unit: m) is the longitudinal dispersivity. If z is the vertical axis, α_2 and α_3 are the dispersivities in the transverse horizontal and transverse vertical directions, respectively (SI unit: m). Setting $\alpha_2 = \alpha_3$ gives the expressions for isotropic media shown in Bear (Ref. 9 and Ref. 11).

Adsorption

As species travel through a porous medium they typically attach to (adsorb), and detach (desorb) from the solid phase, which slows chemical transport through the porous medium. Adsorption and desorption respectively reduces or increases species concentrations in the fluid. The adsorption properties vary between chemicals, so a plume containing multiple species can separate into components (Ref. 6). The Adsorption feature includes four predefined and one user defined relationships to predict the solid concentrations, $c_{\mathrm{P}i}$ from the concentration in the liquid phase, c_i:

$$
\begin{aligned}
c_\mathrm{P} &= c_{\mathrm{Pmax}}\frac{K_\mathrm{L}c}{1 + K_\mathrm{L}c} && \text{Langmuir}\\
c_\mathrm{P} &= K_\mathrm{F}\left(\frac{c}{c_\mathrm{ref}}\right)^N && \text{Freundlich}\\
c_\mathrm{P} &= c_{\mathrm{Pmax}}\frac{b_\mathrm{T}c}{\left(1 + (b_\mathrm{T}c)^{N_\mathrm{T}}\right)^{1/N_\mathrm{T}}} && \text{Toth}\\
c_\mathrm{P} &= \frac{K_\mathrm{B}c_0c}{(c_\mathrm{S} - c)\left(1 + (K_\mathrm{B} - 1)\frac{c}{c_\mathrm{S}}\right)} && \text{BET}
\end{aligned}
\tag{12-18}
$$

The above equations contains the following parameters:

- Freundlich: Freundlich constant K_F (SI unit:·mol/kg), Freundlich exponent N_F (dimensionless), and reference concentration c_ref (SI unit: $\mathrm{mol/m^3}$).
- Langmuir: Langmuir constant K_L (SI unit: $\mathrm{m^3/mol}$), and adsorption maximum c_{Pmax} (SI unit: mol/kg).

- Toth: Toth constant b_T (SI unit: m^3/mol), Toth exponent N_T (dimensionless), and adsorption maximum c_{Pmax} (SI unit: mol/kg).
- BET (Braunauer-Emmett-Teller): BET constant K_B (dimensionless), and a monolayer adsorption capacity c_0 (SI unit: mol/kg) and a Saturation concentration, c_S(SI unit: mol/m^3).

These predefined expressions are adsorption isotherms that describe the amount of species sorbed to the solid. Defined at equilibrium, the switch between liquid and solid phases is instantaneous.

Using a Species Source feature, arbitrary expressions can be entered to define, for example, nonequilibrium and temperature-dependent adsorption laws, including those set out by Fetter (Ref. 7) and Bear and Verruijt (Ref. 8).

The retardation factor, RF, describes how adsorption slows the solute velocity, $\mathbf{u}_c$, relative to the average linear velocity of the fluid, $\mathbf{u}_a$, as in

$$\mathrm{RF} = 1 + \frac{\rho_b}{\theta}\frac{\partial c_P}{\partial c} = \frac{\mathbf{u}_a}{\mathbf{u}_c}$$

If the contaminant moves at the average linear velocity of the fluid for $\mathrm{RF} = 1$. For $\mathrm{RF} > 1$, the contaminant velocity is smaller than the fluid velocity owing to residence time on solids.

Reactions

Chemical reactions of all types influence species transport in porous media. Examples include biodegradation, radioactive decay, transformation to tracked products, temperature- and pressure-dependent functions, exothermic reactions, and endothermic reactions. The reactions represent change in species concentration per unit volume porous medium per time. Reaction terms are used on the right-hand side of the governing equation to represent these processes. For reactions in a fluid phase, multiply the expression by the fluid volume fraction θ. Similarly, solid phase reaction expressions include the bulk density, ρ_b, and gas phase reactions include the gas volume fraction, a_v.

The following expressions define some common types of reactions:

$R_{Li} = -\theta\frac{\ln 2}{\lambda_{Li}}c_i$	Radioactive decay — liquid
$R_{Pi} = -\rho_b\frac{\ln 2}{\lambda_{Pi}}\left(\frac{\partial c_{Pi}}{\partial c_i}\right)c_i$	Radioactive decay — solid
$R_{Gi} = -\frac{\ln 2}{\lambda_{Gi}}a_v\left(\frac{\partial c_{Gi}}{\partial c}\right)c_i$	Radioactive decay — gas
$R_{Lk} = \theta\zeta_{Li}c_i$	Creation from parent c_{Li} — liquid
$R_{Pk} = \rho_b\zeta_{Pi}\left(\frac{\partial c_{Pi}}{\partial c_i}\right)c_i$	Creation from sorbed parent c_{Pi} — solid
$R_{Gk} = -\zeta a_v\left(\frac{\partial c_{Gi}}{\partial c}\right)c_i$	Reaction — gas

where λ is the chemical half life, ζ is a reaction rate, and the subscripts L, P, and G denote liquid, solid, and gas phases, respectively. In the equations, the reactions either depend on liquid concentration c_i or solid phase concentrations c_{Pi} obtained using the sorption derivative with c_i or gas phase concentration c_{Gi} depending on the gas volume fraction, the volatilization, and the liquid concentration.

Reaction rates can vary with results from other equations in your model, such as temperature. For example, enter the Arrhenius rate law given in Ref. 13:

$$\zeta_T = \zeta_R \exp\left[\frac{E_a(T - T_R)}{R_u T T_R}\right] \tag{12-19}$$

In Equation 12-19, T denotes the current absolute temperature, T_R denotes the reference absolute temperature, E_a is the activation energy, and R_u is the universal gas constant.

Mass Transport in Fractures

When thin fractures occur in porous media, fluid flow tends to move faster along the fracture than in the surrounding media. The transport of chemical species therefore also occur also faster in the direction of the fractures.

The fluid flow in a fracture can be modeled using Darcy's law formulated in a thin sheet of porous medium (a fracture):

$$\mathbf{u} = \frac{\kappa}{\mu}\nabla_t p$$

Here $\mathbf{u}$ is the tangential Darcy velocity, κ is the fracture permeability, μ the fluid's dynamic viscosity, and $\nabla_t p$ is the tangential gradient of the fluid pressure.

The equation to solve for mass transport of species c_i in a thin fracture, embedded in a porous media, is derived from Equation 12-12. The resulting equation is:

$$d_{\mathrm{fr}}\left(\frac{\partial \rho_{\mathrm{b}} c_{\mathrm{P},i}}{\partial t} + \frac{\partial \varepsilon_{\mathrm{p}} c_i}{\partial t} + \nabla_{\mathrm{t}} \cdot (D_{\mathrm{e},i}\nabla_{\mathrm{t}} c_i) + \mathbf{u} \cdot \nabla_{\mathrm{t}} c_i\right) = d_{\mathrm{fr}} R_i + d_{\mathrm{fr}} S_i + n_0 \tag{12-20}$$

Here d_{fr} is the fracture thickness, $c_{\mathrm{P},i}$ the amount of species adsorbed to (or desorbed from) the porous matrix (moles per unit dry weight of the solid), ε_{p} is the fracture porosity, and D_{e} is the effective diffusivity. The first two terms on the right hand side represent source terms from reactions, and n_0 corresponds to out-of plane flux from the adjacent porous domain.

In order to arrive at the tangential differential equation, the gradient is split into the contributions normal and tangential to the fracture:

$$\nabla c_i = \nabla_{\mathrm{n}} c_i + \nabla_{\mathrm{t}} c_i$$

The normal gradient is defined in the direction normal to the boundary representing the fracture and the tangential gradient is defined along the boundary. Assuming that the variations in the normal (thin) direction of the fracture are negligible compared to those in the tangential direction, the gradient is simplified as:

$$\nabla c_i = \nabla_{\mathrm{t}} c_i$$

Using The Transport of Diluted Species in Fractures Interface, the transport along fracture boundaries alone is solved for. In this case the transport in the surrounding porous media neglected and the out-of plane flux n_0 vanishes.

	See Fracture for more information about the boundary feature solving Equation 12-20. See for more information about the physics interface solving the equation on boundaries only.

References

1. R. Codina, "A discontinuity-capturing crosswind-dissipation for the finite element solution of the convection-diffusion equation", *Computer Methods in Applied Mechanics and Engineering*, vol. 110, pp. 325–342, 1993.

2. P.V. Danckwerts, "Continuous flow systems: Distribution of residence times", *Chem. Eng. Sci.*, vol. 2, no. 1, 1953.

3. J.M. Coulson and J.F. Richardson, *Chemical Engineering, vol. 2*, 4th ed., Pergamon Press, Oxford, U.K., 1991.

4. J.M. Coulson and J.F. Richardson, *Chemical Engineering, vol. 1*, 4th ed., Pergamon Press, Oxford, U.K., 1991.

5. D.E Rosner, *Transport Processes in Chemically Reacting Flow Systems*, ISBN-13: 978-1483130262, Butterworth-Heinemann, 1986

6. D.M. Mackay, D.L. Freyberg, P.V. Roberts, and J.A. Cherry, "A Natural Gradient Experiment on Solute Transport in a Sand Aquifer: 1. Approach and Overview of Plume Movement", *Water Resourc. Res.*, vol. 22, no. 13, pp. 2017–2030, 1986.

7. C.W. Fetter, *Contaminant Hydrogeology*, Prentice Hall, 1999.

8. J. Bear and A. Verruijt, *Modeling Groundwater Flow and Pollution*, D. Reidel Publishing, 1994.

9. J. Bear, *Hydraulics of Groundwater*, McGraw-Hill, 1979.

10. R.D. Burnett and E.O. Frind, "An Alternating Direction Galerkin Technique for Simulation of Groundwater Contaminant Transport in Three Dimensions: 2. Dimensionality Effects", *Water Resour. Res.*, vol. 23, no. 4, pp. 695–705, 1987.

11. J. Bear, *Dynamics of Fluids in Porous Media*, Elsevier Scientific Publishing, 1972.

12. R.J. Millington and J.M. Quirk, "Permeability of Porous Solids", *Trans. Faraday Soc.*, vol. 57, pp. 1200–1207, 1961.

13. I. Langmuir, "Chemical Reactions at Low Temperatures", *J. Amer. Chem. Soc.*, vol. 37, 1915.

14. R.B. Bird, W.E. Stewart, and E.N. Lightfoot, *Transport Phenomena*, 2nd ed., John Wiley & Sons, Inc., 2007.

The Transport of Diluted Species Interface

Mass transfer is an important part of chemical engineering because this field considers the conversion of one type of substance into another. A lot of this occurs through chemical reactions, although separation and other unit operations are an important part. You can use the Transport of Diluted Species interface to model transport of a diluted species in chemical systems by convection and diffusion.

In the Transport of Diluted Species interface, Fick's law describes the diffusive transport in the flux vector. Fick's law is adequate when the diffusing species is dilute with respect to a solvent. Assuming a binary mixture of solute A in solvent B, concentrations of up to 10 mol% of A can be considered dilute.

	The optional Chemical Reaction Engineering Module has an extension of this physics interface for modeling multicomponent convection, diffusion, and migration (electrokinetic flow).

The **Transport of Diluted Species (tds)** interface ( ), found under the **Chemical Species Transport** branch ( ), is used to calculate the concentration field of a dilute solute in a solvent. Transport and reactions of the species dissolved in a gas, liquid, or solid can be handled with this interface. The driving forces for transport can be diffusion by Fick's law, convection when coupled to a flow field, and migration, when coupled to an electric field.

The interface supports simulation of transport by convection and diffusion in 1D, 2D, and 3D as well as for axisymmetric components in 1D and 2D. The dependent variable is the molar concentration, c. Modeling multiple species transport is possible, whereby the physics interface solves for the molar concentration, c_i, of each species i.

SETTINGS

The **Label** is the default physics interface name.

The **Name** is used primarily as a scope prefix for variables defined by the physics interface. Refer to such physics interface variables in expressions using the pattern `<name>.<variable_name>`. In order to distinguish between variables belonging to different physics interfaces, the `name` string must be unique. Only letters, numbers, and underscores (_) are permitted in the **Name** field. The first character must be a letter.

The default **Name** (for the first physics interface in the model) is `tds`.

DOMAIN SELECTION

If any part of the model geometry should not partake in the mass transfer model, remove that part from the selection list.

TRANSPORT MECHANISMS

Mass transport due to diffusion is always included. Use the check boxes available under **Additional transport mechanisms** to control other transport mechanisms.

Note: Some of the additional transport mechanisms listed below are only available in certain products. For details see https://www.comsol.com/products/specifications/.

- By default, the **Convection** check box is selected. Clear the check box to disable convective transport.
- Select the **Migration in electric field** check box to activate transport of ionic species in an electric field. See further the theory section Adding Transport Through Migration.

!	Transport of ionic species in an electric field is available in a limited set of add-on products. See https://www.comsol.com/products/specifications/ for more details on availability.

Mass Transport in Porous Media

The **Mass transport in porous media** check box activates functionality specific to species transport in porous media. When selected, the following transport mechanisms are available:

- Select the **Dispersion in porous media** check box to activate the dispersion mechanism in porous media. See further Dispersion in the theory chapter.
- Select the **Volatilization in partially saturated porous media** check box to model volatilization in partially saturated domains. For more information see Theory for Transport of Diluted Species

The following features are also enabled when selecting the **Mass transport in porous media** check box:

- Adsorption
- Fracture
- Partially Saturated Porous Media
- Porous Electrode Coupling
- Porous Media Transport Properties
- Reactive Pellet Bed
- Species Source

!	Note: Mass transport in porous media is only available in a limited set of add-on products. See https://www.comsol.com/products/specifications/ for more details on availability.

CONSISTENT STABILIZATION

To display this sections, click the **Show** button ( ) and select **Stabilization**.

- When the **Crosswind diffusion** check box is selected, a weak term that reduces spurious oscillations is added to the transport equation. The resulting equation system is always nonlinear. There are two options for the **Crosswind diffusion type**:
  - **Do Carmo and Galeão** — the default option. This type of crosswind diffusion reduces undershoots and overshoots to a minimum but can in rare cases give equation systems that are difficult to fully converge.
  - **Codina**. This option is less diffusive compared to the Do Carmo and Galeão option but can result in more undershoots and overshoots. It is also less effective for anisotropic meshes. The Codina option activates a text field for the **Lower gradient limit** g_{lim}. It defaults to `0.1[mol/m^3)/tds.helem`, where `tds.helem` is the local element size.
- For both consistent stabilization methods, select an **Equation residual**. **Approximate residual** is the default and means that derivatives of the diffusion tensor components are neglected. This setting is usually accurate enough and is computationally faster. If required, select **Full residual** instead.

INCONSISTENT STABILIZATION

To display this section, click the **Show** button ( ) and select **Stabilization**. By default, the **Isotropic diffusion** check box is not selected, because this type of stabilization adds artificial diffusion and affects the accuracy of the original problem. However, this option can be used to get a good initial guess for underresolved problems.

ADVANCED SETTINGS

To display this section, click the **Show** button ( ) and select **Advanced Physics Options**. Normally these settings do not need to be changed. Select a **Convective term** — **Nonconservative form** (the default) or **Conservative form**. The conservative formulation should be used for compressible flow. See Convective Term Formulation for more information.

DISCRETIZATION

To display all settings available in this section, click the **Show** button ( ) and select **Advanced Physics Options**.

The **Compute boundary fluxes** check box is activated by default so that COMSOL Multiphysics computes predefined accurate boundary flux variables. When this option is checked, the solver computes variables storing accurate boundary fluxes from each boundary into the adjacent domain.

If the check box is cleared, the COMSOL Multiphysics software instead computes the flux variables from the dependent variables using extrapolation, which is less accurate in postprocessing results but does not create extra dependent variables on the boundaries for the fluxes.

The flux variables affected in the interface are:

- `ndflux_`*c* (where *c* is the dependent variable for the concentration). This is the normal diffusive flux and corresponds to the boundary flux when diffusion is the only contribution to the flux term.
- `ntflux_`*c* (where *c* is the dependent variable for the concentration). This is the normal total flux and corresponds to the boundary flux plus additional transport terms, for example, the convective flux when you use the nonconservative form.

Also the **Apply smoothing to boundary fluxes** check box is available if the previous check box is checked. The smoothing can provide a more well-behaved flux value close to singularities.

For details about the boundary fluxes settings, see Computing Accurate Fluxes in the *COMSOL Multiphysics Reference Manual*.

The **Value type when using splitting of complex variables** setting should in most pure mass transfer problems be set to **Real**, which is the default. It makes sure that the dependent variable does not get affected by small imaginary contributions, which can occur, for example, when combining a Time Dependent or Stationary study with a frequency-domain study. For more information, see Splitting Complex-Valued Variables in the *COMSOL Multiphysics Reference Manual*.

DEPENDENT VARIABLES

The dependent variable name is the **Concentration** *c* by default. The names must be unique with respect to all other dependent variables in the component.

Add or remove species variables in the model and also change the names of the dependent variables that represent the species concentrations.

Enter the **Number of species**. Use the **Add concentration** ( ) and **Remove concentration** ( ) buttons as needed.

FURTHER READING

	• Theory for Transport of Diluted Species • Numerical Stabilization in the *COMSOL Multiphysics Reference Manual*. • In the *COMSOL Multiphysics Reference Manual*, see Table 2-4 for links to common sections and Table 2-5 for common feature nodes. You can also search for information: press F1 to open the **Help** window or Ctrl+F1 to open the **Documentation** window.

	• *Effective Diffusivity in Porous Materials*: Application Library path **COMSOL_Multiphysics/Diffusion/effective_diffusivity** • *Micromixer*: Application Library path **COMSOL_Multiphysics/Fluid_Dynamics/micromixer**

The Transport of Diluted Species in Porous Media Interface

This interface ( ), found under the **Chemical Species Transport** branch ( ), is used to calculate the species concentration and transport in free and porous media. The interface is the same as the *Transport of Diluted Species* interface but it uses other defaults: The Mass Transport in Porous Media property is selected, and a Porous Media Transport Properties node is added by default. The interface includes reaction rate expressions and solute sources for modeling of species transport and reaction in porous media.

This interface is dedicated to modeling transport in porous media, including immobile and mobile phases, where the chemical species may be subjected to diffusion, convection, migration, dispersion, adsorption, and volatilization in porous media. It supports cases where either the solid phase substrate is exclusively immobile, or when a gas-filling medium is also assumed to be immobile.

It applies to one or more diluted species or solutes that move primarily within a fluid that fills (saturated) or partially fills (unsaturated) the voids in a solid porous medium. The pore space not filled with fluid contains an immobile gas phase. Models including a combination of porous media types can be studied.

The main feature nodes are the **Porous Media Transport Properties** and **Partially Saturated Porous Media** nodes, which add the equations for the species concentrations and provide an interface for defining the properties of the porous media, as well as additional properties governing adsorption, volatilization, dispersion and diffusion, migration, and the velocity field to model convection.

The physics interface can be used for stationary and time-dependent analysis.

When this physics interface is added, these default nodes are also added to the **Model Builder** — **Porous Media Transport Properties**, **No Flux** (the default boundary condition), and **Initial Values**. Then, from the **Physics** toolbar, add other nodes that implement, for example, boundary conditions, reaction rate expressions, and species sources. You can also right-click **Transport of Diluted Species in Porous Media** to select physics features from the context menu.

SETTINGS

The rest of the settings are the same as The Transport of Diluted Species Interface.

FURTHER READING

	• Theory for Transport of Diluted Species • Domain, Boundary, and Pair Nodes for the Transport of Diluted Species Interface

	• *Variably Saturated Flow and Transport — Sorbing Solute*: Application Library path **Subsurface_Flow_Module/Solute_Transport/sorbing_solute** Web link: https://www.comsol.com/model/variably-saturated-flow-and-transport-sorbing-solute-490

Domain, Boundary, and Pair Nodes for the Transport of Diluted Species Interface

The Transport of Diluted Species Interface has the following domain, boundary, and pair nodes, listed in alphabetical order, available from the **Physics** ribbon toolbar (Windows users), **Physics** context menu (Mac or Linux users), or by right-clicking to access the context menu (all users).

	To add a node, go to the **Physics** toolbar, no matter what operating system you are using. Subnodes are available by clicking the parent node and selecting it from the **Attributes** menu.

- Adsorption
- Concentration
- Electrode Surface Coupling
- Equilibrium Reaction
- Fast Irreversible Surface Reaction
- Flux
- Flux Discontinuity
- Fracture
- Inflow
- Initial Values
- Line Mass Source
- Mass-Based Concentrations
- No Flux
- Open Boundary
- Outflow
- Partially Saturated Porous Media
- Partition Condition
- Periodic Condition
- Point Mass Source
- Porous Electrode Coupling
- Porous Media Transport Properties
- Reaction Coefficients
- Reactions
- Reactive Pellet Bed
- Species Source
- Surface Reactions
- Surface Equilibrium Reaction
- Symmetry
- Thin Diffusion Barrier
- Thin Impermeable Barrier
- Transport Properties
- Turbulent Mixing
- Volatilization

Some features require certain add-on modules. For details see https://www.comsol.com/products/specifications/

	For axisymmetric components, COMSOL Multiphysics takes the axial symmetry boundaries (at $r = 0$) into account and automatically adds an **Axial Symmetry** node that is valid on boundaries representing the symmetry axis.

!	In the *COMSOL Multiphysics Reference Manual*, see Table 2-4 for links to common sections and Table 2-5 for common feature nodes. You can also search for information: press F1 to open the **Help** window or Ctrl+F1 to open the **Documentation** window.

Transport Properties

The settings in this node are dependent on the check boxes selected under Transport Mechanisms on the Settings window for the Transport of Diluted Species interface. It includes only the sections required by the activated transport mechanisms. It has all the equations defining transport of diluted species as well as inputs for the material properties.

When the **Convection** check box is selected, the Turbulent Mixing subnode is available from the context menu as well as from the **Physics** toolbar, **Attributes** menu.

MODEL INPUTS

The temperature model input is always available. Select the source of the **Temperature**. For **User defined**, enter a value or expression for the temperature in the input field. This input option is always available.

You can also select the temperature solved for by a Heat Transfer interface added to the model component. These physics interfaces are available for selection in the **Temperature** list.

CONVECTION

If transport by convection is active, the velocity field of the solvent needs to be specified. Select the source of the **Velocity field**. For **User defined**, enter values or expressions for the velocity components in the input fields. This input option is always available.

You can also select the velocity field solved for by a Fluid Flow interface added to the model component. These physics interfaces are available for selection in the **Velocity field** list.

DIFFUSION

Select an option from the **Material** list. This selection list can only be used if a material has been added in the Materials node and if that material has a diffusion coefficient defined. Else, you need to type in the diffusivity in the **User Defined** edit field.

Enter the **Diffusion coefficient** D_c for each species. This can be a scalar value for isotropic diffusion or a tensor describing anisotropic diffusion. Select the appropriate tensor type — **Isotropic**, **Diagonal**, **Symmetric**, or **Full** that describes the diffusion transport, and then enter the values in the corresponding element (one value for each species).

Note that multiple species, as well as Migration in Electric fields (described below) is only available for certain COMSOL Multiphysics add-on products. See details: https://www.comsol.com/products/specifications/.

MIGRATION IN ELECTRIC FIELD

This section is available when the **Migration in electric field** check box is selected. From the **Electric potential** list, select the source of the electric field.

- Enter a value or expression for the **Electric potential** V, which is **User defined**; this input option is always available.
- Select the electric potential solved by an AC/DC-based interface that has also been added to the model.
- Select the electric potential defined or solved by Electrochemistry interface that has been added to the component.

By default the **Mobility** is set to be calculated based on the species diffusivity and the temperature using the **Nernst-Einstein relation**. For **User defined**, and under **Mobility**, select the appropriate scalar or tensor type — **Isotropic**, **Diagonal**, **Symmetric**, or **Full** — and type in the value of expression of the mobility $u_{\mathrm{m,c}}$.

Enter the **Charge number** z_{c} (dimensionless, but requires a plus or minus sign) for each species.

The temperature (if you are using mobilities based on the Nernst-Einstein relation) is taken from **Model Inputs** section.

Note that the migration in electric fields feature is only available in some COMSOL products. See details: https://www.comsol.com/products/specifications/.

EXAMPLE MODELS

	• *Separation Through Dialysis*: Application Library path **Chemical_Reaction_Engineering_Module/Mixing_and_Separation/dialysis** Web link: https://www.comsol.com/model/separation-through-dialysis-258

	• *Transport in an Electrokinetic Valve*: Application Library path **Microfluidics_Module/Fluid_Flow/electrokinetic_valve** Web link: https://www.comsol.com/model/electrokinetic-valve-603

Turbulent Mixing

Use this node to account for the turbulent mixing of the chemical species caused by the eddy diffusivity. This node should typically be used when the specified velocity field corresponds to a RANS solution.

!	This feature is only available in a limited set of add-on products. See https://www.comsol.com/products/specifications/ for more details on availability.

The subnode can added from the context menu (right-click the Transport Properties parent node), as well as from the **Physics** toolbar, **Attributes** menu, provided that **Convection** is selected as a transport mechanism.

TURBULENT MIXING PARAMETERS

Some physics interfaces provide the turbulent kinematic viscosity, and these appear as options in the **Turbulent kinematic viscosity** ν_{T} list. The list always contains the **User defined** option where any value or expression can be entered.

The default **Turbulent Schmidt number** Sc_{T} is 0.71 (dimensionless).

FURTHER READING

See the section About Turbulent Mixing in the *CFD Module User's Guide* (this link is available online or if you have the CFD Module documentation installed).

Initial Values

The **Initial Values** node specifies the initial values for the concentration of each species. These serve as an initial guess for a stationary solver or as initial conditions for a transient simulation.

DOMAIN SELECTION

If there are several types of domains with different initial values defined, it might be necessary to remove some domains from the selection. These are then defined in an additional **Initial Values** node.

INITIAL VALUES

Enter a value or expression for the initial value of the **Concentration** or concentrations, c_i. This also serves as a starting guess for stationary problems.

Mass-Based Concentrations

Use the **Mass-Based Concentrations** node to add postprocessing variables for mass-based concentrations (SI unit: kg/m^3) and mass fractions (dimensionless) for all species.

MIXTURE PROPERTIES

The default **Solvent density** ρ_{solvent} is taken **From material**. For **User defined,** enter a value or expression manually. Define the **Molar mass** of each species, which is needed to calculate the mass-based concentration.

Reactions

Use the **Reactions** node to account for the consumption or production of species through chemical reactions. Define the rate expressions as required.

DOMAIN SELECTION

From the **Selection** list, choose the domains on which to define rate expression or expressions that govern the source term in the transport equations.

Several reaction nodes can be used to account for different reactions in different parts for the modeling geometry.

REACTION RATES

Add a rate expression R_i (SI unit: mol/(m^3·s)) for species i. Enter a value or expression in the field. Note that if you have the *Chemistry* interface available, provided with the *Chemical Reaction Engineering Module*, the reaction rate expressions can be automatically generated and picked up using the drop-down menu. For an example, see the application *Fine Chemical Production in a Plate Reactor* as linked below.

REACTING VOLUME

This section is only available when the Mass Transport in Porous Media property is available and selected. See https://www.comsol.com/products/specifications/ for more details on availability.

When specifying reaction rates for a species in porous media, the specified reaction rate may have the basis of the total volume, the pore volume, or the volume of a particular phase.

- For **Total volume**, the reaction expressions in mol/(m^3·s) are specified per unit volume of the model domain (multiplied by unity).

- For **Pore volume**, the reaction expressions in mol/(m^3·s) are specified per unit volume of total pore space. The reaction expressions will be multiplied by the domain porosity, ε_p. (ε_p equals unity for nonporous domains.)
- For **Liquid phase**, the reaction expressions in mol/(m^3·s) are specified per unit volume of liquid in the pore space. The expressions will be multiplied by the liquid volume fraction θ. (θ equals ε_p for Saturated Porous Media domains).
- For **Gas phase**, the expressions are multiplied by the gas volume fraction $a_v = \varepsilon_p - \theta$. a_v equals 0 for Saturated Porous Media domains.

FURTHER READING

See the theory chapter on chemical species transport, starting with the section *Mass Balance Equation*.

	• *Fine Chemical Production in a Plate Reactor*: Application Library path **Chemical_Reaction_Engineering_Module/ Reactors_with_Mass_and_Heat_Transfer/plate_reactor** Web link: https://www.comsol.com/model/fine-chemical-production-in-a-plate-reactor-8589

No Flux

This node is the default boundary condition on exterior boundaries. It should be used on boundaries across which there is no mass flux, typically solid walls where no surface reactions occur. The condition applied for each species corresponds to

$$-\mathbf{n} \cdot (-D\nabla c) = 0$$

where $\mathbf{n}$ denotes the outward pointing normal of the boundary. When the mass transport includes migration of ionic species, the no flux condition is:

$$-\mathbf{n} \cdot (-D\nabla c - zu_m Fc\nabla\phi) = 0$$

CONVECTION

By default, the feature prescribes a vanishing flux due to diffusion and migration in an electric field. This is the appropriate no flux condition when the relative convective velocity at the boundary is zero. When the fluid velocity at the boundary is not equal to that of the boundary, it is often convenient to prescribe the total flux including the convection. To do this select **Include** in the **Convection** section.

When including the convection, the no flux condition prescribed is:

$$-\mathbf{n} \cdot (-D\nabla c + \mathbf{u}c) = 0$$

or

$$-\mathbf{n} \cdot (-D\nabla c - zu_m Fc\nabla\phi + \mathbf{u}c) = 0$$

when migration of ionic species is included.

Inflow

Use this node to specify all species concentrations at an inlet boundary.

If you want to specify the concentration of a subset of the partaking species, this can be done by using the Concentration node instead.

For the **Electroanalysis** interface, this node is available when you select the **Convection** check box on the physics interface **Settings** window.

CONCENTRATION

For the concentration of each species $c_{0,c}$ (SI unit: mol/m^3), enter a value or expression.

BOUNDARY CONDITION TYPE

The option **Concentration constraint** constrains the concentration values on the boundary by the use of pointwise constraints.

The other option, **Flux (Danckwerts)** can be used when the concentration at the boundary is not known, or when it varies in a non-trivial manner. This may, for example, be useful when reactions with high reaction rates occur in the vicinity of the inlet. In this case the concentration far upstream of the boundary is instead prescribed. The **Flux (Danckwerts)** condition prescribes the total flux defined by the upstream concentration and the fluid velocity at the boundary.

CONSTRAINT SETTINGS

To display this section, click the **Show** button ( ) and select **Advanced Physics Options**. You can find details about the different constraint settings in the section Constraint Reaction Terms in the *COMSOL Multiphysics Reference Manual*.

FURTHER READING

See the theory chapter in the section Danckwerts Inflow Boundary Condition.

Outflow

Apply this condition at outlets boundaries where species should be transported out of the model domain by fluid motion or by an electric field (in the case of ions). It is assumed that convection and migration in an electric are the dominating transport mechanisms across the boundary, and therefore that the diffusive transport can be ignored, that is:

$$\mathbf{n} \cdot (-D\nabla c) = 0$$

Note that the **Convection** or the **Migration in electric field** transport mechanisms needs to be included for this node to be available.

Concentration

This condition node adds a boundary condition for the species concentration. For example, a $c = c_0$ condition specifies the concentration of species c.

CONCENTRATION

Individually specify the concentration for each species. Select the check box for the **Species** to specify the concentration, and then enter a value or expression in the corresponding field. To use another boundary condition for a specific species, click to clear the check box for the concentration of that species.

CONSTRAINT SETTINGS

To display this section, click the **Show** button ( ) and select **Advanced Physics Options**. You can find details about the different constraint settings in the section Constraint Reaction Terms in the *COMSOL Multiphysics Reference Manual*.

Flux

This node can be used to specify the species molar flux across a boundary. The flux can for example occur due to chemical reactions or a phase change at the boundary. The flux can also represent the transport to or from a surrounding environment currently not included model.

The prescribed flux of a species c is by default defined as

$$-\mathbf{n} \cdot (-D\nabla c) = J_0$$

where $\mathbf{n}$ denotes the outward pointing normal of the boundary. When the mass transport includes migration of ionic species, the flux is defined as:

$$-\mathbf{n} \cdot (-D\nabla c - zu_{\mathrm{m}}Fc\nabla\phi) = J_0$$

The flux prescribed, J_0, can include any arbitrary user-specified expression. It can be constant or a function of a dependent variable or independent variable. Common examples are a flux dependent of the concentration, temperature, pressure or the electric potential ϕ .

CONVECTION

By default, the flux due to diffusion and migration in an electric field is prescribed. This is the appropriate flux condition when the relative velocity at the boundary is zero. When the fluid velocity is not equal to that of the boundary, it is often convenient to prescribe the total flux, including the convection. To do this select **Include** in the **Convection** section.

When including the convection, the prescribed flux is defined as:

$$-\mathbf{n} \cdot (-D\nabla c + \mathbf{u}c) = J_0$$

or

$$-\mathbf{n} \cdot (-D\nabla c - zu_{\mathrm{m}}Fc\nabla\phi + \mathbf{u}c) = J_0$$

when migration of ionic species is included.

INWARD FLUX

Select the Species check box for the species for which to specify the flux, and enter a value or expression for the inward flux in the corresponding field. Use a minus sign when specifying a flux directed out of the system. To use another boundary condition for a specific species, click to clear the check box for that species.

External convection

Set **Flux type** to **External convection** to prescribe a flux to or from an exterior domain (not modeled) assumed to include convection. The exterior can for example include a forced convection to control the temperature or to increase the mass transport. In this case the prescribed mass flux corresponds to

$$J_0 = k_{\mathrm{c}}(c_{\mathrm{b}} - c)$$

where k_{c} is a mass transfer coefficient and c_{b} is the bulk concentration, the typical concentration far into the surrounding exterior domain.

Symmetry

The **Symmetry** node can be used to represent boundaries where the species concentration is symmetric, that is, where there is no mass flux across the boundary.

This boundary condition is identical to that of the No Flux node.

Flux Discontinuity

This node represents a discontinuity in the mass flux across an interior boundary:

$$-\mathbf{n}\cdot[(\mathbf{J}+\mathbf{u}c)_{\mathrm{u}}-(\mathbf{J}+\mathbf{u}c)_{\mathrm{d}}] = N_0 \qquad \mathbf{J} = -D\nabla c$$

where the value N_0 (SI unit: mol/(m^2·s)) specifies the jump in total flux at the boundary. This can be used to model a boundary source, for example a surface reaction, adsorption or desorption.

FLUX DISCONTINUITY

In this section the jump in species flux (or surface source) is specified.

Select the Species check box for the species to specify and enter a value or expression for the material flux jump in the corresponding field. To use a different boundary condition for a specific species, click to clear the check box for the flux discontinuity of that species.

Partition Condition

The **Partition Condition** node can be used to prescribe the ratio between the concentration of a solute species in two different immiscible phases. It can for example be used on interior boundaries separating two liquid phases, a gas-liquid interface, or on a boundary separating a liquid phase and a solid or porous media. For a species concentration c_i, the ratio between the concentration on the up side and on the down side of the boundary ($c_{i,\mathrm{u}}$ and $c_{i,\mathrm{d}}$ respectively) is defined as

$$K_i = \frac{c_{i,\mathrm{u}}}{c_{i,\mathrm{d}}}$$

in terms of a partition coefficient K_i. The up and down side of the selected boundary is indicated in the Graphics window. The arrows point from the down side into the up side.

!	This feature is only available in a limited set of add-on products. See https://www.comsol.com/products/specifications/ for more details on availability.

PARTITION COEFFICIENT

Select the **Reverse direction** check box to reverse the direction of the arrows on the selected boundaries, and the corresponding definition of the up and down side concentration.

Use the associated input fields to prescribe the partition coefficient K_i.

FURTHER READING

For an example of using a partition condition, see this application example:

	Separation Through Dialysis: Application Library path **Chemical_Reaction_Engineering_Module/Mixing_and_Separation/dialysis**

Periodic Condition

The **Periodic Condition** node can be used to define periodicity for the mass transport between two sets of boundaries. The node prescribes continuity in the concentration and the mass flux between the “source” and the “destination”

side respectively. Note that these names are arbitrary and does not influence the direction in which mass is transported. It is dictated by mass transfer equations in the adjacent domains.

The node can be activated on more than two boundaries, in which case the feature tries to identify two separate surfaces that each consist of one or several connected boundaries.

For more complex geometries, it might be necessary to add the **Destination Selection** subnode, which is available from the context menu (right-click the parent node) as well as from the **Physics** toolbar, **Attributes** menu. With this subnode, the boundaries that constitute the source and destination surfaces can be manually specified.

FURTHER READING

For an example of using a periodic condition, see this application example:

	The KdV Equation and Solitons: Application Library path **COMSOL_Multiphysics/Equation_Based/kdv_equation**

Line Mass Source

The **Line Mass Source** feature models mass flow originating from a tube or line region with an infinitely small radius.

!	This feature is only available in a limited set of add-on products. See https://www.comsol.com/products/specifications/ for more details on availability.

SELECTION

The **Line Mass Source** feature is available for all dimensions, but the applicable selection differs between the dimensions.

MODEL DIMENSION	APPLICABLE GEOMETRICAL ENTITY
2D	Points
2D Axisymmetry	Points not on the symmetry axis and the symmetry axis
3D	Edges

SPECIES SOURCE

Enter the source strength, $\dot{q}_{l,c}$, for each species (SI unit: mol/(m·s)). A positive value results in species injection from the line into the computational domain, and a negative value means that the species is removed from the computational domain.

Line sources located on a boundary affect the adjacent computational domains. This effect makes the physical strength of a line source located in a symmetry plane twice the given strength.

Point Mass Source

The **Point Mass Source** feature models mass flow originating from an infinitely small domain around a point.

!	This feature is only available in a limited set of add-on products. See https://www.comsol.com/products/specifications/ for more details on availability.

SPECIES SOURCE

Enter the source strength, $\dot{q}_{\mathrm{p,c}}$, for each species (SI unit: mol/s). A positive value results in species injection from the point into the computational domain, and a negative value means that the species is removed from the computational domain.

Point sources located on a boundary or on an edge affect the adjacent computational domains. This has the effect, for example, that the physical strength of a point source located in a symmetry plane is twice the given strength.

Open Boundary

Use this node to set up mass transport across boundaries where both convective inflow and outflow can occur. On the parts of the boundary where fluid flows into the domain, an exterior species concentration is prescribed. On the remaining parts, where fluid flows out of the domain, a condition equivalent to the **Outflow** node is instead prescribed.

The direction of the flow across the boundary is typically calculated by a fluid flow interface and is provided as a model input to the Transport of Diluted Species interface.

!	This feature is only available in a limited set of add-on products. See https://www.comsol.com/products/specifications/ for more details on availability.

EXTERIOR CONCENTRATION

Enter a value or expression for the **Exterior concentration**.

Thin Diffusion Barrier

Use this boundary condition to model a thin layer through which mass is transported by diffusion only. The node is applicable on interior boundaries and can be used to avoid meshing thin structures.

THIN DIFFUSION BARRIER

Specify the **Layer thickness**, d_{s}, and input a **Diffusion coefficient**, $D_{\mathrm{s,c}}$, for each of the species included.

Thin Impermeable Barrier

This feature models a thin mass transfer barrier. It is available on interior boundaries and introduces a discontinuity in the concentration across the boundary. On each side, a no-flux condition is prescribed for the mass transport implying that it acts as a barrier. The feature can be used to avoid meshing thin structures.

Solving a model involving coupled fluid flow and mass transfer, the Thin Impermeable Barrier feature can be combined with an Interior Wall feature in order to model a thin solid wall.

Equilibrium Reaction

Use this node to model a reaction where the kinetics is assumed so fast that the equilibrium condition is fulfilled at all times. The node solves for an additional degree of freedom (the reaction rate R_{eq}) to fulfill the equilibrium condition at all times in all space coordinates.

If the **Apply equilibrium condition on inflow boundaries** check box is selected, the specified inflow concentration values in all active **Inflow** boundary nodes for the physics interface are modified to comply with the equilibrium condition.

- A necessary requirement for this is feature to be available is that two or more species are solved for by the interface.
- This feature is only available in a limited set of add-on products. See https://www.comsol.com/products/specifications/ for more details on availability.

EQUILIBRIUM CONDITION

The list defaults to **Equilibrium constant** or select **User defined**. For either option, the **Apply equilibrium condition on inflow boundaries** check box is selected by default.

For **Equilibrium constant**, enter an **Equilibrium constant** K_{eq} (dimensionless). Also enter a value or expression for the **Unit activity concentration** C_{a0} (SI unit: mol/m^3). Selecting **Equilibrium constant** defines an equilibrium condition based on the stoichiometric coefficients, the species activities, and the law of mass action.

For **User defined**, enter an **Equilibrium expression** E_{eq} (dimensionless).

STOICHIOMETRIC COEFFICIENTS

Enter a value for the stoichiometric coefficient ν_{c} (dimensionless). The default is 0. Use negative values for reactants and positive values for products in the modeled reaction.

Species with a stoichiometric coefficient value of 0 are not affected by the **Equilibrium Reaction** node.

Surface Reactions

The **Surface Reactions** node can be used to account for the species boundary flux due to chemical reactions occurring on a surface (heterogeneous reactions). For a domain species participating in a surface reaction, the boundary flux corresponds to the reaction rate at the surface.

SURFACE REACTION RATE

Specify the surface reaction rate J_0 of each species resulting from the reactions. Note that if you have the Chemistry interface available, provided with the Chemical Reaction Engineering Module, the reaction rate expressions can be automatically generated and picked up using the drop-down menu.

FURTHER READING

For an example of using the Surface Reactions node, see this application example:

Chemical Vapor Deposition of GaAs: Application Library path **Chemical_Reaction_Engineering_Module/Reactors_with_Mass_and_Heat_Transfer/gaas_cvd**

Surface Equilibrium Reaction

Use this node to model an equilibrium reaction on a boundary (surface). The settings for this node are similar to Equilibrium Reaction. Note that a necessary requirement for this is feature to be available is that two or more species are solved for by the interface.

!	This feature is only available in a limited set of add-on products. See https://www.comsol.com/products/specifications/ for more details on availability.

Fast Irreversible Surface Reaction

This boundary node defines an irreversible reaction where the kinetics is so fast that the only factor limiting the reaction rate is the transport of a species to the reacting surface.

The node will set the **Rate limiting species concentration to zero** at the boundary, and balance the fluxes of the species participating in the reaction and the current densities according to the Stoichiometric Coefficients settings.

!	This feature is only available in a limited set of add-on products. See https://www.comsol.com/products/specifications/ for more details on availability.

Porous Electrode Coupling

Use this node to add a molar source in a domain that is coupled to one or multiple Porous Electrode Reaction nodes of an Electrochemistry Interface.

The molar source is calculated from the number of electrons, stoichiometric coefficients, and volumetric current densities of the coupled porous electrode reactions specified in the **Reaction Coefficients** subnodes.

In the Transport of Concentrated Species interface, the molar sources (or sinks) are multiplied by the species molar masses to obtain the corresponding mass sources.

Additional Reaction Coefficients subnodes are available from the context menu (right-click the parent node) as well as from the **Physics** toolbar, **Attributes** menu.

Note that if you are also modeling the momentum transport and expect a nonnegligible total mass source or sink, which is often the case in gas diffusion electrodes, you need to also add a corresponding Porous Electrode Coupling node in the Fluid Flow interface.

!	This feature is only available in a limited set of add-on products. See https://www.comsol.com/products/specifications/ for more details on availability.

Reaction Coefficients

Add this node to the Electrode Surface Coupling and Porous Electrode Coupling features to define molar fluxes and sources based on electrode current densities in an **Electrochemistry** interface.

The molar flux or source is proportional to the stoichiometric coefficients and the current density according to Faraday's law.

Current densities from **Electrode Reaction** (i_{loc}, SI unit: A/m^2) or **Porous Electrode Reaction** nodes (i_{v}, SI unit: A/m^3) of any **Electrochemistry** interface in the model are available for selection as the **Coupled reaction**, and user-defined expressions are also supported.

Enter the **Number of participating electrons** n_m (dimensionless) and the **Stoichiometric coefficient** v_c (dimensionless) as explained in the theory section linked below.

Use multiple subnodes to couple to multiple reactions.

Electrode Surface Coupling

Use this node to define a flux boundary condition based on current densities of one or multiple Electrode Reaction nodes in an Electrochemistry interface.

The flux is proportional to the current densities and the stoichiometric coefficients according to Faraday's law as defined by summation over the Reaction Coefficients subnodes.

Note that if you are also modeling the momentum transport and expect a nonnegligible total mass flux over the boundary, which is often the case for gas diffusion electrodes, you need to also add a corresponding Electrode Surface Coupling node in the Fluid Flow interface.

!	This feature is only available in a limited set of add-on products. See https://www.comsol.com/products/specifications/ for more details on availability.

Porous Media Transport Properties

Use this node to model the concentration of diluted species transported through interstices in porous media. A part form convection and diffusion, the node contains functionality to include species evolution through adsorption, dispersion, and reaction.

!	This feature is only available in a limited set of add-on products. See https://www.comsol.com/products/specifications/ for more details on availability.

MODEL INPUTS

The temperature model input is always available. Select the source of the **Temperature**. For **User defined**, enter a value or expression for the temperature in the input field. This input option is always available.

You can also select the temperature solved for by a Heat Transfer interface added to the model component. These physics interfaces are available for selection in the **Temperature** list.

MATRIX PROPERTIES

Use the **Porous material** list to define a material specifying the matrix properties on the current selection. By default the **Domain material** is used.

Specify the **Porosity,** ε_{p} (dimensionless) of the porous matrix. This is by default taken **From material**. Select **User defined** to instead enter a different value.

CONVECTION

If transport by convection is active, the velocity field of the solvent needs to be specified. Select the source of the **Velocity field**. For **User defined**, enter values or expressions for the velocity components in the input fields. This input option is always available.

You can also select the velocity field solved for by a Fluid Flow interface added to the model component. These physics interfaces are available for selection in the **Velocity field** list.

DIFFUSION

Select a **Fluid material** (when available and applicable).

Specify the **Fluid diffusion coefficient** $D_{\mathrm{F,i}}$ (SI unit: m^2/s). Enter a value or expression for each of the species in the corresponding input field. The default is $1\cdot10^{-9}$ m^2/s.

Select the **Effective diffusivity model**: **Millington and Quirk model** (the default), **Bruggeman model**, **Tortuosity model**, or **User defined**. For **Tortuosity model**, enter a value for the tortuosity $\tau_{\mathrm{F,i}}$ (dimensionless). The default is 1.

MIGRATION IN ELECTRIC FIELD

This section is available when the **Migration in electric field** check box is selected. From the **Electric potential** list, select the source of the electric field.

- Enter a value or expression for the **Electric potential** V, which is **User defined**; this input option is always available.
- Select the electric potential solved by an AC/DC-based interface that has also been added to the model.
- Select the electric potential defined or solved by Electrochemistry interface that has been added to the component.

By default the **Mobility** is set to be calculated based on the species effective diffusivity and the temperature using the **Nernst-Einstein relation**. For **User defined**, and under **Mobility**, select the appropriate scalar or tensor type — **Isotropic**, **Diagonal**, **Symmetric**, or **Full** — and type in the value of expression of the effective mobility $u_{\mathrm{me,c}}$.

Enter the **Charge number** z_{c} for each species.

DISPERSION

This section is available when the **Dispersion in porous media** check box is selected on the **Settings** window for the physics interface.

Select the **Specify dispersion for each species individually** check box to specify the dispersion tensor D_{D} (SI unit: m^2/s) for each species separately. The default is to use the same dispersion tensor D_{D} for all species.

Select an option from the **Dispersion tensor** list — **User defined** (the default) or **Dispersivity**. For **User defined**, use it to specify the dispersion components as user-defined constants or expressions. Select **Isotropic**, **Diagonal**, **Symmetric**, or **Full** based on the properties of the dispersion tensor.

Select **Dispersivity** when **Convection** has been added as the transport mechanism. Specify the dispersivities (SI unit: m) to define the dispersion tensor D_{D} (SI unit: m^2/s) together with the velocity field $\mathbf{u}$. Select an option from the **Dispersivity model** list: **Isotropic** (the default) or **Transverse isotropic** based on the properties of the porous media. For isotropic porous media, specify the longitudinal and transverse dispersivities. For transverse isotropic porous media, specify the longitudinal, horizontal transverse, and vertical transverse dispersivities.

Adsorption

Use this node to model adsorption of the fluid phase species onto the porous media surface. It is available as a subnode to the Porous Media Transport Properties and the Partially Saturated Porous Media nodes.

!	This feature is only available in a limited set of add-on products. See https://www.comsol.com/products/specifications/ for more details on availability.

MATRIX PROPERTIES

Use the **Porous material** list to define a material specifying the matrix properties on the current selection. By default the **Domain material** is used.

The density of the porous media is needed when modeling adsorption to the surface of the porous matrix. By default **Density** ρ is defined from the domain material.

ADSORPTION

Select a **Sorption type** — **Langmuir** (the default), **Freundlich**, **Toth**, **BET**,or **User defined** to specify how to compute c_{P}, the amount of species sorbed to the solid phase (moles per unit dry weight of the solid):

- For **Langmuir**:

$$c_{\mathrm{P}} = c_{\mathrm{Pmax}}\frac{K_{\mathrm{L}}c}{1+K_{\mathrm{L}}c} \quad , \quad K_P = \frac{\partial c_{\mathrm{P}}}{\partial c} = \frac{K_{\mathrm{L}}c_{\mathrm{Pmax}}}{(1+K_{\mathrm{L}}c)^2}$$

  Enter a **Langmuir constant** $k_{\mathrm{L,c}}$ (SI unit: $\mathrm{m}^3/\mathrm{mol}$) and an **Adsorption maximum** $c_{\mathrm{p,max,c}}$ (SI unit: mol/kg).

- For **Freundlich**:

$$c_{\mathrm{P}} = K_{\mathrm{F}}\left(\frac{c}{c_{\mathrm{ref}}}\right)^N \quad , \quad K_P = \frac{\partial c_{\mathrm{P}}}{\partial c} = N\frac{c_{\mathrm{P}}}{c}$$

  Enter a **Freundlich constant** $k_{\mathrm{F,c}}$ (SI unit: mol/kg), a **Freundlich exponent** $N_{\mathrm{F,c}}$ (dimensionless), and a **Reference concentration** $c_{\mathrm{ref,c}}$ (SI unit: $\mathrm{mol}/\mathrm{m}^3$).

- For **Toth**:

$$c_{\mathrm{P}} = c_{\mathrm{Pmax}}\frac{b_{\mathrm{T}}c}{(1+(b_{\mathrm{T}}c)^{N_{\mathrm{T}}})^{1/N_{\mathrm{T}}}}$$

and

$$K_P = \frac{\partial c_{\mathrm{P}}}{\partial c} = c_{\mathrm{Pmax}}b_{\mathrm{T}}(1+(b_{\mathrm{T}}c)^{N_{\mathrm{T}}})^{-\left(1+\frac{1}{N_{\mathrm{T}}}\right)}$$

  Enter a **Toth constant** $b_{\mathrm{T,c}}$ (SI unit: $\mathrm{m}^3/\mathrm{mol}$), a **Toth exponent** $N_{\mathrm{T,c}}$ (dimensionless), and an **Adsorption maximum** $c_{\mathrm{p,max,c}}$ (SI unit: mol/kg).

- For **BET (Brunauer-Emmett-Teller)**:

$$c_{\mathrm{P}} = \frac{K_{\mathrm{B}}c_0c}{(c_{\mathrm{S}}-c)\left(1+(K_{\mathrm{B}}-1)\frac{c}{c_{\mathrm{S}}}\right)}$$

and

$$K_P = \frac{\partial c_\mathrm{P}}{\partial c} = \frac{K_\mathrm{B} c_0 c_\mathrm{S}((K_\mathrm{B}-1)c^2 + c_\mathrm{S}^2)}{(c-c_\mathrm{S})^2 (c_\mathrm{S} + (K_\mathrm{B}-1)c)^2}$$

Enter a **BET constant** $K_{\mathrm{B,c}}$ (dimensionless), a **Monolayer adsorption capacity** $c_{0,\mathrm{c}}$ (SI unit: mol/kg), and an **Saturation concentration** $c_{\mathrm{S,c}}$ (SI unit: mol/m^3).

- For **User defined**:

$$c_\mathrm{P} = f(c)$$

Enter an **Adsorption isotherm** $c_{\mathrm{P,c}}$ (SI unit: mol/kg).

For more information, see Adsorption in the theory section of the *Chemical Reaction Engineering Module User's Guide*.

FURTHER READING

See the theory chapter in the section The Transport of Diluted Species in Porous Media Interface.

Partially Saturated Porous Media

Use this node to model the concentration of diluted species transported by a liquid through in partially filled porous media. The interstices of the porous media contains the liquid carrier phase and gas pockets. A part from convection and diffusion, the node contains functionality to include species evolution through adsorption, dispersion, reaction, and volatilization.

!	This feature is only available in a limited set of add-on products. See https://www.comsol.com/products/specifications/ for more details on availability.

MODEL INPUTS

The temperature model input is always available. Select the source of the **Temperature**. For **User defined**, enter a value or expression for the temperature in the input field. This input option is always available.

You can also select the temperature solved for by a Heat Transfer interface added to the model component. These physics interfaces are available for selection in the **Temperature** list.

MATRIX PROPERTIES

Use the **Porous material** list to define a material specifying the matrix properties on the current selection. By default the **Domain material** is used.

Specify the **Porosity,** ε_p (dimensionless) of the porous matrix. This is by default taken **From material**. Select **User defined** to instead enter a different value.

SATURATION

Select **Saturation** or **Liquid volume fraction** from the list.

For **Saturation**, enter a value for s (dimensionless) between 0 and 1. The liquid volume fraction is then computed from the saturation and porosity as $\theta = s\varepsilon_\mathrm{p}$.

For **Liquid volume fraction**, enter a value for θ (dimensionless) between 0 and the value of porosity. The saturation is then computed from the porosity and the liquid volume fraction as $s = \theta\varepsilon_\mathrm{p}$.

Select a **Fluid fraction time change**: **Fluid fraction constant in time** (the default), **Time change in fluid fraction**, or **Time change in pressure head**.

- For **Time change in fluid fraction**, enter $\mathrm{d}\theta/\mathrm{d}t$ (SI unit: 1/s).
- For **Time change in pressure head**, enter $\mathrm{d}H_\mathrm{p}/\mathrm{d}t$ (SI unit: m/s) and a **Specific moisture capacity** C_m (SI unit: 1/m).

CONVECTION

If transport by convection is active, the velocity field of the solvent needs to be specified. Select the source of the **Velocity field**. For **User defined**, enter values or expressions for the velocity components in the input fields. This input option is always available.

You can also select the velocity field solved for by a Fluid Flow interface added to the model component. These physics interfaces are available for selection in the **Velocity field** list.

DIFFUSION

Select a **Liquid material** from the list.

Specify the **Liquid diffusion coefficient** $D_\mathrm{L,c}$ (SI unit: m^2/s). Enter a value or expression for each of the species in the corresponding input field. The default is $1\cdot10^{-9}$ m^2/s.

Select the **Effective diffusivity model, liquid**: **Millington and Quirk model** (the default), **Bruggeman model**, **Tortuosity model**, or **User defined**. For **Tortuosity model**, enter a value for $\tau_\mathrm{L,c}$ (dimensionless). The default is 1.

When the **Volatilization in partially saturated porous media** check box is selected on the **Settings** window for the physics interface, also define the **Gas material**, **Gas diffusion coefficient**, and **Effective diffusivity model, gas**.

MIGRATION IN ELECTRIC FIELD

This section is available when the **Migration in electric field** check box is selected. It is similar to that in **Porous Media Transport Properties** feature. Select the source of electric field from the **Electric potential** list. The default selection to **Mobility** is the **Nernst-Einstein relation**.

DISPERSION

This section is available when the **Dispersion in porous media** check box is selected on the **Settings** window for the physics interface. The settings are the same as for Porous Media Transport Properties.

VOLATILIZATION

This section is available when the **Volatilization in partially saturated porous media** check box is selected on the **Settings** window for the physics interface.

Enter a value for the **Volatilization** $k_\mathrm{G,c}$ (dimensionless) for each species.

Volatilization

This feature is available when the **Volatilization in partially saturated porous media** check box is selected on the **Settings** window for the physics interface.

Use this feature to model mass transfer at the boundary due to volatilization. The feature can be added on boundaries of a **Partially Saturated Porous Media** domain. In this case the porous media contains a liquid phase and a gas phase. The species dissolved in the liquid are assumed to be vaporized at the boundary, and transported into the surrounding bulk region due to convection and diffusion. The mass transfer at the boundary is defined as

$$-\mathbf{n}\cdot\mathbf{J}_\mathrm{c} = -h_\mathrm{c}(k_\mathrm{G,c}c - c_\mathrm{Gatm,c})$$

where h_c is the mass transfer coefficient, $k_{G,c}$ the volatilization coefficient, and $c_{Gatm,c}$ the concentration in the surrounding atmosphere.

!	This feature is only available in a limited set of add-on products. See https://www.comsol.com/products/specifications/ for more details on availability.

VOLATILIZATION

Enter a **Mass transfer coefficient** h_c defining the transfer into the surrounding media. This can be given by boundary layer theory. When assuming that no convective flow is present in the surrounding, the mass transfer coefficient can be defined from the gas diffusion coefficient D_{Gc} and the thickness of the diffusion layer d_s in the manner of

$$h_c = \frac{D_{Gc}}{d_s}$$

Also give the atmospheric concentration for each species, $c_{Gatm,c}$. The **Volatilization** coefficient $k_{G,c}$ for each species are taken from the adjacent **Partially Saturated Porous Media** domain.

Reactive Pellet Bed

Use this feature to model packed bed reactors with catalytic pellets. For details, see the section Theory for the Reactive Pellet Bed. By default, subnodes for Reactions and are added.

!	This feature is only available in a limited set of add-on products. See https://www.comsol.com/products/specifications/ for more details on availability.

BED PARAMETERS

Here you can specify the bed porosity, which is the void fraction in the packed bed structure. Select **From densities** to calculate the porosity from the bed density and the individual pellet density. Select **User defined** to specify the porosity directly.

PELLET SHAPE AND SIZE

The default shape is spherical. Cylinders, flakes, and user-defined shapes can also be selected. A uniform pellet size or a discrete size distribution can be selected. Select a **Pellet size distribution** — **Uniform size** (the default), **Two sizes**, **Three sizes**, **Four sizes**, or **Five sizes** to select up to five different particle sizes.

Depending on the shape selection, equivalent radii or volumes and surface areas will be required as input. If a size distribution is selected, the volume percentage of each size is required as input.

Note that different chemical reactions can be specified for each pellet size if a distribution is specified.

SURFACE SPECIES

In order to add surface species, click the **Add** button and enter the species name in the **Surface species** table. Added surface species are be available inside all pellet types defined in the **Pellet Shape and Size** section, but not in the bulk fluid.

For each pellet type, specify the **Reactive specific surface area**, $S_{b,reac}$ (SI unit: 1/m), corresponding to the surface area, per volume, available for surface reactions.

PELLET PARAMETERS

Enter a **Pellet porosity** $\varepsilon_{\mathrm{pe}}$ (dimensionless) to specify the porosity of the pellet internals.

Select **Diffusion model** — **Millington and Quirk model** (the default), **Bruggeman model**, **Tortuosity model**, or **User defined** to describe the effective correction of the diffusion coefficient in the pellet. In the case of the **Tortuosity model**, a value for the tortuosity τ_{pe} within the pellet is required.

Enter also the **Diffusion coefficient** $D_{\mathrm{pe,c}}$ (SI unit: m^2/s). If a **User defined** diffusion model is selected, an **Effective diffusion coefficient** $D_{\mathrm{peff,c}}$ (SI unit: m^2/s) is entered. The default value is $1\cdot10^{-9}$ m^2/s in both cases.

PELLET-FLUID SURFACE

For the coupling of concentration between the pellet internals and the surrounding fluid, two **Coupling type** options are available:

- **Continuous concentration**, assuming that all resistance to mass transfer to/from the pellet is within the pellet and no resistance to pellet-fluid mass transfer is on the bulk fluid side. The concentration in the fluid will thus be equal to that in the pellet pore just at the pellet surface: $c_{\mathrm{pe},i} = c_i$. This constraint also automatically ensures flux continuity between the internal pellet domain and the free fluid domain through so-called reaction forces in the finite element formulation.
- **Film resistance (mass flux)**: The flux of mass across the pellet-fluid interface into the pellet is possibly rate determined on the bulk fluid side, by film resistance. The resistance is expressed in terms of a film mass transfer coefficient, h_{Di}, such that:

$$N_{i,\mathrm{inward}} = h_{D,i}(c_i - c_{\mathrm{pe},i}) .$$

The **Film resistance (mass flux)** option computes the inward surface flux, $N_{i,\mathrm{inward}} = h_{D,i}(c_i - c_{\mathrm{pe},i})$. h_{Di} is the mass transfer coefficient (SI unit: m/s) and is calculated with the default **Automatic** setting from a dimensionless **Sherwood number expression** or with **User defined** mass transfer coefficients.

The **Active specific surface area** (SI unit: m^{-1}) is required to couple the mass transfer between the pellets and the bed fluid. Select either the **Automatic** setting that calculates the specific surface area from the shape information given above. User defined is also available for explicit surface area specification.

The **Sherwood number expression** can be computed from three available expressions: **Frössling**, **Rosner**, and **Garner and Keey**. The Frössling equation is the default and probably the most commonly used for packed spheres. All of these are based on the dimensionless Reynolds, Re, and Schmidt, Sc, numbers, which are computed from **Density** and **Dynamic viscosity**. Select these to be taken either **From material** or choose the **User defined** alternative.

PELLET DISCRETIZATION

The extra dimension in the pellet needs to be discretized into elements. Select a **Distribution** — **Cubic root sequence** (the default), **Linear**, or **Square root sequence**. Enter the **Number of elements** N_{elem}.

CONSTRAINT SETTINGS

To display this section, click the **Show** button ( ) and select **Advanced Physics Options**. See the details about the different constraint settings in the section Constraint Reaction Terms.

FURTHER READING

Theory for the Reactive Pellet Bed in the Theory section of this manual.

For an application using the Reactive Pellet Bed feature, see

	• *A Multiscale 3D Packed Bed Reactor*: Application Library path **Chemical_Reaction_Engineering_Module/Reactors_with_Porous_Catalysts/packed_bed_reactor_3d** Web link: https://www.comsol.com/model/a-multiscale-3d-packed-bed-reactor-17019

Reactions (Reactive Pellet Bed)

The Reactions subfeature to the Reactive Pellet Bed is used to define reaction terms to the transport within the reactive pellets. The feature also defines the corresponding averaged heat sources to be applied to heat transport in the bulk fluid.

DOMAIN SELECTION

From the **Selection** list, choose the domains on which to define rate expression or expressions that govern source terms in the transport equations.

Several reaction nodes can be used to account for different reactions in different parts for the modeling geometry.

REACTION RATES

Add a rate expression R_i (SI unit: mol/(m^3·s)) for species i using a value or an expression. One reaction rate per species and pellet type can be entered.

Note that if you have the *Chemistry* interface available, provided with the *Chemical Reaction Engineering Module*, the reaction rate expressions can be automatically generated and picked up using the drop-down menu. For an example, see the application *Fine Chemical Production in a Plate Reactor*.

SURFACE REACTION RATES

The section is available when one or more surface species have been added in the **Surface Species** section of the Reactive Pellet Bed feature.

Specify the rate expression $R_{\mathrm{surf},i}$ (SI unit: mol/(m^2·s)) corresponding to the surface reaction rate of each volumetric species i participating in the surface reaction. Furthermore, specify the surface reaction rates for the participating surface species in the corresponding table.

If several pellet types have been defined, one set of surface reaction rates per pellet type can be defined.

Note that if you have the *Chemistry* interface available, provided with the *Chemical Reaction Engineering Module*, the reaction rate expressions can be automatically generated and picked up using the drop-down menu.

HEAT SOURCE

Specify the heat source originating from the heat of reaction of the chemical reactions inside the pellet can be specified. Both heat sources from reactions in the fluid, and heat sources resulting from surface reactions can be defined. When using several pellet types, heat sources for each type can be added.

The heat sources are most conveniently picked up from a Chemistry feature that defines the reaction rate and the heat of reactions. In that case, the Rate expression can be selected from the drop-down menu. Else it can be set to User Defined.

The defined heat source can be used by a Heat Source feature in any of the heat transfer interfaces.

Species Source

In order to account for consumption or production of species in porous domains, the **Species Source** node adds source terms expressions S_i to the right-hand side of the species transport equations.

DOMAIN SELECTION

From the **Selection** list, choose the domains on which to define rate expression or expressions that govern the source term in the transport equations.

If there are several types of domains, with subsequent and different reactions occurring within them, it might be necessary to remove some domains from the selection. These are then defined in an additional **Species Source** node.

SPECIES SOURCE

Add a source term S_i (SI unit: mol/(m^3·s)) for each of the species solved for. Enter a value or expression in the field of the corresponding species.

Hygroscopic Swelling

The **Hygroscopic Swelling** multiphysics coupling node ( ) is used for moisture concentration coupling between the Solid Mechanics interface and either the Transport of Diluted Species or Transport of Diluted Species in Porous Media interfaces.

Hygroscopic swelling is an effect of internal strain caused by changes in moisture content. This volumetric strain can be written as

$$\varepsilon_{\mathrm{hs}} = \beta_{\mathrm{h}} M_{\mathrm{m}} (c_{\mathrm{mo}} - c_{\mathrm{mo,ref}})$$

where β_{h} is the coefficient of hygroscopic swelling, M_{m} is the molar mass, c_{mo} is the moisture concentration, and $c_{\mathrm{mo,ref}}$ is the strain-free reference concentration.

This feature requires a license of either the MEMS Module or the Structural Mechanics Module. The multiphysics feature will appear automatically if both the Transport of Diluted Species and the Solid Mechanics interfaces are added to the same component. For the most current information about licensing, please see See https://www.comsol.com/products/specifications/.

FURTHER READING

More information about how to use hygroscopic swelling can be found in Hygroscopic Swelling Coupling section in the *Structural Mechanics Module User's Guide*.

More information about multiphysics coupling nodes can be found in the section The Multiphysics Branch.

Fracture

Use this node to model mass transport along thin fractures in porous media. The node assumes that the transport in the tangential direction along the fracture is dominant, as a result of lower flow resistance.

!	This feature is only available in a limited set of add-on products. See https://www.comsol.com/products/specifications/ for more details on availability.

FRACTURE PROPERTIES

Specify a value for the **Fracture thickness** d_{fr}.

MATRIX PROPERTIES

Use the **Porous material** list to define a material specifying the matrix properties on the current selection. By default the **Boundary material** is used.

Specify the **Porosity,** ε_p (dimensionless) of the porous matrix. This is by default taken **From material**. Select **User defined** to instead enter a different value.

CONVECTION

Select an option from the **Velocity field** list to specify the convective velocity along the fracture. For a consistent model, use a Fracture Flow feature in a Darcy's Law interface to compute the fluid flow velocity in the fracture.

For **User defined**, enter values or expressions for the velocity components in the table shown.

	The settings for the **Diffusion**, and **Dispersion** sections are the same as for Porous Media Transport Properties.

The Reacting Flow, Diluted Species Multiphysics Interface

Reacting Flow, Diluted Species is a predefined multiphysics interface that couples fluid flow with mass transport and reactions.

Selecting **Laminar Flow, Diluted Species** under the **Chemical Species Transport>Reacting Flow** branch of the **Model Wizard** or **Add Physics** windows, a **Laminar Flow** interface and a **Transport of Diluted Species** interface are added to the Model Builder.

In addition, the Multiphysics node is added, which includes the multiphysics coupling feature **Reacting Flow, Diluted Species**. The **Reacting Flow, Diluted** feature controls the coupling between the separate interfaces in order to facilitate easy set up of models.

In this section:

- The Reacting Laminar Flow, Diluted Species Interface
- The Reacting Flow, Diluted Species Coupling Feature
- Physics Interface Features

The Reacting Laminar Flow, Diluted Species Interface

The **Reacting Laminar Flow, Diluted Species** multiphysics interface is used to simulate laminar flow coupled to species transport in a gas or liquid.

It combines the **Laminar Flow**, and **Transport of Diluted Species** interfaces. The **Reacting Flow, Diluted Species** multiphysics coupling, which is added automatically, couples fluid flow and mass transport. The fluid flow can either be free flow or flow in a porous medium. The mass transfer solves for the development of one or several solutes dissolved in a gas or liquid solvent.

The interface can be used for stationary and time-dependent analysis in 2D, 2D axial symmetry, and 3D.

On the constituent physics interfaces:

The equations solved by the **Laminar Flow** interface are the Navier-Stokes equations for conservation of momentum and the continuity equation for conservation of mass. A **Fluid Properties** feature is active by default on the entire interface selection. A **Fluid and Matrix Properties** feature can be added in order to model flow in porous media by solving the Brinkman equations.

The **Transport of Diluted Species** interface solves for an arbitrary number of mass fractions. The species equations include transport by convection, diffusion and, optionally, migration in an electric field.

!	Note that multiple species is only available for certain COMSOL Multiphysics add-on products. See details: http://www.comsol.com/products/specifications/.

The Reacting Flow, Diluted Species Coupling Feature

The **Reacting Flow, Diluted Species** ( ) multiphysics coupling is used to simulate mass transport and reactions in a gas or liquid.

> The Reacting Flow, Diluted Species coupling feature only supports laminar flow.

DOMAIN LEVEL SYNCHRONIZATION

The **Reacting Flow, Diluted Species** coupling synchronizes the features from a Single-Phase Flow, or Brinkman Equations, interface and a Transport of Diluted Species interface. When added, the velocity field used by the Transport of Diluted Species interface is synchronized to the one computed in the fluid flow interface.

SETTINGS

The **Label** is the default multiphysics coupling feature name.

The **Name** is used primarily as a scope prefix for variables defined by the coupling node. Refer to such variables in expressions using the pattern `<name>.<variable_name>`. In order to distinguish between variables belonging to different coupling nodes or physics interfaces, the `name` string must be unique. Only letters, numbers, and underscores (_) are permitted in the **Name** field. The first character must be a letter.

The default **Name** (for the first multiphysics coupling feature in the model) is `rfd1`.

DOMAIN SELECTION

The **Reacting Flow, Diluted Species** coupling is automatically defined on the intersection of the selections for the coupled interfaces.

The **Selection** list displays the domains where the coupling feature is active.

COUPLED INTERFACES

This section defines the physics involved in the multiphysics coupling. The **Fluid flow** and **Species transport** lists include all applicable physics interfaces.

The default values depend on how this coupling node is created.

- If it is added from the **Physics** ribbon (Windows users), **Physics** contextual toolbar (macOS and Linux users), or context menu (all users), then the first physics interface of each type in the component is selected as the default.
- If it is added automatically when a multiphysics interface is chosen in the **Model Wizard** or **Add Physics** window, then the two participating physics interfaces are selected.

You can also select **None** from either list to uncouple the node from a physics interface. If the physics interface is removed from the **Model Builder**, for example **Laminar Flow** is deleted, then the **Species transport** list defaults to **None** as there is nothing to couple to.

Click the **Go to Source** buttons ( ) to move to the main physics interface node for the selected physics interface.

> If a physics interface is deleted and then added to the model again, then in order to reestablish the coupling, you need to choose the physics interface again from the **Fluid flow** or **Species transport** lists. This is applicable to all multiphysics coupling nodes that would normally default to the once present interface. See Multiphysics Modeling Workflow.

Physics Interface Features

Physics nodes are available from the **Physics** ribbon toolbar (Windows users), **Physics** context menu (macOS or Linux users), or right-click to access the context menu (all users).

	In general, to add a node, go to the **Physics** toolbar, no matter what operating system you are using.

LAMINAR FLOW

The available physics features for The Laminar Flow interface are listed in the section Domain, Boundary, Pair, and Point Nodes for Single-Phase Flow.

TRANSPORT OF DILUTED SPECIES

The available physics features for The Transport of Diluted Species interface are listed in the section Domain, Boundary, and Pair Nodes for the Transport of Diluted Species Interface.

13

The Fluid Flow Interface

This chapter explains how to use the Laminar Flow interface, found under the **Fluid Flow>Single-Phase Flow** branch ( ) when adding a physics interface. This physics interface is used to model and simulate fluid mechanics for laminar, incompressible fluids. The engineering community often uses the term *CFD*, *computational fluid dynamics*, to refer to the numerical simulation of fluids.

See The Nonisothermal Flow and Conjugate Heat Transfer Interfaces for details about the modeling of laminar nonisothermal flows.

The optional *CFD Module* includes support for turbulent flow, turbulent nonisothermal flow, multiphase flow, and many other fluid-flow related features.

In this chapter:

- Theory of Laminar Flow
- The Single-Phase Flow, Laminar Flow Interface

Theory of Laminar Flow

The theory for the Single-Phase Flow, Laminar Flow and Viscoelastic Flow interfaces is described in this section:

- General Single-Phase Flow Theory
- Compressible Flow
- Weakly Compressible Flow
- The Mach Number Limit
- Incompressible Flow
- The Reynolds Number
- Theory for the Wall Boundary Condition
- Prescribing Inlet and Outlet Conditions
- Normal Stress Boundary Condition
- Mass Sources for Fluid Flow
- Numerical Stability — Stabilization Techniques for Fluid Flow
- Solvers for Laminar Flow
- Pseudo Time Stepping for Laminar Flow Models
- Discontinuous Galerkin Formulation
- Particle Tracing in Fluid Flow
- References for the Single-Phase Flow, Laminar Flow Interfaces

The theory about most boundary conditions is found in Ref. 2.

General Single-Phase Flow Theory

The Single-Phase Fluid Flow interfaces are based on the Navier-Stokes equations, which in their most general form read

$$\frac{\partial \rho}{\partial t} + \nabla \cdot (\rho \mathbf{u}) = 0 \tag{13-1}$$

$$\rho \frac{\partial \mathbf{u}}{\partial t} + \rho(\mathbf{u} \cdot \nabla)\mathbf{u} = \nabla \cdot [-p\mathbf{I} + \tau] + \mathbf{F} \tag{13-2}$$

$$\rho C_p \left(\frac{\partial T}{\partial t} + (\mathbf{u} \cdot \nabla)T \right) = -(\nabla \cdot \mathbf{q}) + \tau : \mathbf{S} - \frac{T}{\rho} \frac{\partial \rho}{\partial T}\bigg|_p \left(\frac{\partial p}{\partial t} + (\mathbf{u} \cdot \nabla)p \right) + Q \tag{13-3}$$

where

- ρ is the density (SI unit: $\mathrm{kg/m^3}$)
- $\mathbf{u}$ is the velocity vector (SI unit: m/s)
- p is pressure (SI unit: Pa)
- τ is the viscous stress tensor (SI unit: Pa)
- $\mathbf{F}$ is the volume force vector (SI unit: $\mathrm{N/m^3}$)

- C_p is the specific heat capacity at constant pressure (SI unit: J/(kg·K))
- T is the absolute temperature (SI unit: K)
- $\mathbf{q}$ is the heat flux vector (SI unit: W/m^2)
- Q contains the heat sources (SI unit: W/m^3)
- $\mathbf{S}$ is the strain-rate tensor:

$$\mathbf{S} = \frac{1}{2}(\nabla\mathbf{u} + (\nabla\mathbf{u})^T)$$

The operation ":" denotes a contraction between tensors defined by

$$\mathbf{a}:\mathbf{b} = \sum_n \sum_m a_{nm} b_{nm} \tag{13-4}$$

This is sometimes referred to as the double dot product.

Equation 13-1 is the continuity equation and represents conservation of mass. Equation 13-2 is a vector equation which represents conservation of momentum. Equation 13-3 describes the conservation of energy, formulated in terms of temperature. This is an intuitive formulation that facilitates boundary condition specifications.

To close the equation system, Equation 13-1 through Equation 13-3, constitutive relations are needed. For a Newtonian fluid, which has a linear relationship between stress and strain, Stokes (Ref. 1) deduced the following expression:

$$\tau = 2\mu\mathbf{S} - \frac{2}{3}\mu(\nabla\cdot\mathbf{u})\mathbf{I} \tag{13-5}$$

The dynamic viscosity, μ (SI unit: Pa·s), for a Newtonian fluid is allowed to depend on the thermodynamic state but not on the velocity field. All gases and many liquids can be considered Newtonian. Examples of non-Newtonian fluids are honey, mud, blood, liquid metals, and most polymer solutions. The Heat Transfer Module treats all fluids as Newtonian according to Equation 13-5.

When you have the CFD Module or the Microfluidics Module, you can model flows of non-Newtonian fluids using the predefined constitutive models, which describe the stress-strain relationship for non-Newtonian fluids. The following models are available: Power law, Carreau, Bingham-Papanastasiou, Herschel-Bukley-Papanastasiou, and Casson-Papanastasiou

Other commonly used constitutive relations are Fourier's law of heat conduction and the ideal gas law.

In theory, the same equations describe both laminar and turbulent flows. In practice, however, the mesh resolution required to simulate turbulence with the Laminar Flow interface makes such an approach impractical.

	There are several books where derivations of the Navier-Stokes equations and detailed explanations of concepts such as Newtonian fluids can be found. See, for example, the classical text by Batchelor (Ref. 3) and the more recent work by Panton (Ref. 4).

Many applications describe isothermal flows for which Equation 13-3 is decoupled from Equation 13-1 and Equation 13-2.

2D AXISYMMETRIC FORMULATIONS

A 2D axisymmetric formulation of Equation 13-1 and Equation 13-2 requires $\partial/\partial\phi$ to be zero. That is, there must be no gradients in the azimuthal direction. A common additional assumption is, however, that $u_\phi = 0$. In such

cases, the ϕ -equation can be removed from Equation 13-2. The resulting system of equations is both easier to converge and computationally less expensive compared to retaining the ϕ -equation. The default 2D axisymmetric formulation of Equation 13-1 and Equation 13-2 therefore assumes that

$$\partial/\partial\phi = 0$$
$$u_\phi = 0$$

Compressible Flow

The equations of motion for a single-phase fluid are the continuity equation:

$$\frac{\partial\rho}{\partial t} + \nabla\cdot(\rho\mathbf{u}) = 0 \tag{13-6}$$

and the momentum equation:

$$\rho\frac{\partial\mathbf{u}}{\partial t} + \rho\mathbf{u}\cdot\nabla\mathbf{u} = -\nabla p + \nabla\cdot\left(\mu(\nabla\mathbf{u} + (\nabla\mathbf{u})^T) - \frac{2}{3}\mu(\nabla\cdot\mathbf{u})\mathbf{I}\right) + \mathbf{F} \tag{13-7}$$

These equations are applicable for incompressible as well as for compressible flow with density and viscosity variations.

Weakly Compressible Flow

The same equations as for Compressible Flow are applied for weakly compressible flow. The only difference is that the density is evaluated at the reference pressure. The density may be a function of other quantities, in particular it may be temperature dependent.

The weakly compressible flow equations are valid for incompressible as well as compressible flow with density variations independent of the pressure.

Provided that the densities dependency pressure is specified through model inputs, the density is automatically evaluated at the reference pressure level.

The Mach Number Limit

An important dimensionless number in fluid dynamics is the Mach number, Ma, defined by

$$\mathrm{Ma} = \frac{|\mathbf{u}|}{a}$$

where a is the speed of sound. A flow is formally incompressible when $\mathrm{Ma} = 0$. This is theoretically achieved by letting the speed of sound tend to infinity. The Navier-Stokes equations then have the mathematical property that pressure disturbances are instantaneously propagated throughout the entire domain. This results in a parabolic equation system.

The momentum equation, Equation 13-7, is parabolic for unsteady flow and elliptic for steady flow, whereas the continuity equation, Equation 13-6, is hyperbolic for both steady and unsteady flow. The combined system of equations is thus hybrid parabolic-hyperbolic for unsteady flow and hybrid elliptic-hyperbolic for steady flow. An exception occurs when the viscous term in Equation 13-7 becomes vanishingly small, such as at an outflow boundary, in which case the momentum equation becomes locally hyperbolic. The number of boundary conditions to apply on the boundary then depends on the number of characteristics propagating into the computational domain. For the purely hyperbolic system, the number of characteristics propagating from the boundary into the domain changes as the Mach number passes through unity. Hence, the number of boundary conditions required

to obtain a numerically well-posed system must also change. The compressible formulation of the laminar and turbulent interfaces uses the same boundary conditions as the incompressible formulation, which implies that the compressible interfaces are not suitable for flows with a Mach number larger than or equal to one.

The practical Mach number limit is lower than one, however. The main reason is that the numerical scheme (stabilization and boundary conditions) of the Laminar Flow interface does not recognize the direction and speed of pressure waves. The fully compressible Navier-Stokes equations do, for example, start to display very sharp gradients already at moderate Mach numbers. But the stabilization for the single-phase flow interface does not necessarily capture these gradients. It is impossible to give an exact limit where the low Mach number regime ends and the moderate Mach number regime begins, but a rule of thumb is that the Mach number effects start to appear at $\mathrm{Ma} = 0.3$. For this reason, the compressible formulation is referred to as *Compressible flow (Ma<0.3)* in COMSOL Multiphysics.

Incompressible Flow

When the temperature variations in the flow are small, a single-phase fluid can often be assumed incompressible; that is, ρ is constant or nearly constant. This is the case for all liquids under normal conditions and also for gases at low velocities. For constant ρ, Equation 13-6 reduces to

$$\rho \nabla \cdot \mathbf{u} = 0 \tag{13-8}$$

and Equation 13-7 becomes

$$\rho \frac{\partial \mathbf{u}}{\partial t} + \rho(\mathbf{u} \cdot \nabla)\mathbf{u} = \nabla \cdot [-p\mathbf{I} + \mu(\nabla \mathbf{u} + (\nabla \mathbf{u})^T)] + \mathbf{F} \tag{13-9}$$

Provided that the densities dependency on temperature and pressure is specified through model inputs, the density is evaluated at the reference pressure level and at the reference temperature. However, if the density is a function of other quantities such as a concentration field, or if the density is specified by a user defined expression, the user has to make sure that the density is defined as constant when the incompressible flow formulation is used.

The Reynolds Number

A fundamental characteristic in analyses of fluid flow is the Reynolds number:

$$\mathrm{Re} = \frac{\rho U L}{\mu}$$

where U denotes a velocity scale, and L denotes a representative length. The Reynolds number represents the ratio between inertial and viscous forces. At low Reynolds numbers, viscous forces dominate and tend to damp out all disturbances, which leads to laminar flow. At high Reynolds numbers, the damping in the system is very low, giving small disturbances the possibility to grow by nonlinear interactions. If the Reynolds number is high enough, the flow field eventually ends up in a chaotic state called turbulence.

Observe that the Reynolds number can have different meanings depending on the length scale and velocity scale. To be able to compare two Reynolds numbers, they must be based on equivalent length and velocity scales.

The Fluid Flow interfaces automatically calculate the local cell Reynolds number $\mathrm{Re}^c = \rho|\mathbf{u}|h/(2\mu)$ using the element length h for L and the magnitude of the velocity vector u for the velocity scale U. This Reynolds number is not related to the character of the flow field, but to the stability of the numerical discretization. The risk for numerical oscillations in the solution increases as Re^c grows. The cell Reynolds number is a predefined quantity available for visualization and evaluation (typically it is available as: `spf.cellRe`).

Theory for the Wall Boundary Condition

See Wall for the node settings. Note that some modules have additional theory sections describing options available with that module.

SLIP

The No Slip condition assumes that there are no viscous effects at the slip wall and hence, no boundary layer develops. From a modeling point of view, this is a reasonable approximation if the important effect of the wall is to prevent fluid from leaving the domain. Mathematically, the constraint can be formulated as:

$$\mathbf{u}\cdot\mathbf{n} = 0, \qquad (-p\mathbf{I}+\mu(\nabla\mathbf{u}+(\nabla\mathbf{u})^{\mathrm{T}}))\mathbf{n} = \mathbf{0}$$

The no-penetration term takes precedence over the Neumann part of the condition and the above expression is therefore equivalent to

$$\mathbf{u}\cdot\mathbf{n} = 0, \qquad \mathbf{K}-(\mathbf{K}\cdot\mathbf{n})\mathbf{n} = \mathbf{0}$$
$$\mathbf{K} = \mu(\nabla\mathbf{u}+(\nabla\mathbf{u})^{\mathrm{T}})\mathbf{n}$$

expressing that there is no flow across the boundary and no viscous stress in the tangential direction.

For a moving wall with translational velocity $\mathbf{u}_{\mathrm{tr}}$, $\mathbf{u}$ in the above equations is replaced by the relative velocity $\mathbf{u}_{\mathrm{rel}} = \mathbf{u}-\mathbf{u}_{\mathrm{tr}}$.

SLIDING WALL

The sliding wall option is appropriate if the wall behaves like a conveyor belt; that is, the surface is sliding in its tangential direction. The wall does not have to actually move in the coordinate system.

- In 2D, the tangential direction is unambiguously defined by the direction of the boundary, but the situation becomes more complicated in 3D. For this reason, this boundary condition has slightly different definitions in the different space dimensions.
- For 2D and 2D axisymmetric components, the velocity is given as a scalar U_{w} and the condition prescribes

  $$\mathbf{u}\cdot\mathbf{n} = 0, \qquad \mathbf{u}\cdot\mathbf{t} = U_{\mathrm{w}}$$

  where $\mathbf{t} = (n_y, -n_x)$ for 2D and $\mathbf{t} = (n_z, -n_r)$ for axial symmetry.
- For 3D components, the velocity is set equal to a given vector $\mathbf{u}_{\mathrm{w}}$ projected onto the boundary plane:

  $$\mathbf{u} = \frac{\mathbf{u}_{\mathrm{w}}-(\mathbf{n}\cdot\mathbf{u}_{\mathrm{w}})\mathbf{n}}{\|\mathbf{u}_{\mathrm{w}}-(\mathbf{n}\cdot\mathbf{u}_{\mathrm{w}})\mathbf{n}\|}\|\mathbf{u}_{\mathrm{w}}\|$$

  The normalization makes $\mathbf{u}$ have the same magnitude as $\mathbf{u}_{\mathrm{w}}$ even if $\mathbf{u}_{\mathrm{w}}$ is not exactly parallel to the wall.

CONSTRAINT SETTINGS

The wall feature uses three different techniques to constraint the velocity field:

- Pointwise constraints is the standard technique to enforce strong constraints in the finite element method. The desired value of the velocity is prescribed at each node point in the mesh. Since the constraint is enforced locally at each node, only local values are affected by the constraint and the constraints are independent of each other. The solvers can therefore eliminate both the constrained degrees of freedom and the constraint force terms, effectively reducing the number of degrees of freedom being solved for.

  The main advantage of pointwise constraints is that they enforce the constraint exactly pointwise. This means that they do not introduce any leakage of the velocity across the wall, unless specified. The main disadvantage of pointwise constraints is that they introduce locking effects when trying to impose a no penetration condition for the velocity, $\mathbf{u}\cdot\mathbf{n} = 0$, on curved walls or walls with sharp corners.

- Using Weak constraints is an alternative method to prescribe the velocity. It consists on enforcing the boundary condition for the velocity via *Lagrange multipliers*. Their main advantage is that the Lagrange multiplier can provide an accurate representation of the reaction flux at the wall. Their main disadvantage is that they introduce extra unknowns, and are usually difficult to combine with other constraint methods on adjacent boundaries. Moreover, they may require extra constraints for the Lagrange multipliers. For more information, see Weak Constraints in the *COMSOL Multiphysics Reference Manual*.
- Discontinuous Galerkin (DG) constraints use a numerical flux to prescribe the velocity at the wall. They impose the constraint in a integral sense rather than pointwise, and do not suffer from the locking effects introduced by pointwise constraints when trying to prescribe a no penetration condition for the velocity. They are also better behaved when prescribing nonlinear constraints. Their main disadvantage is that the constraint is only imposed approximately, and may produce small leaks. For more information, see Discontinuous Galerkin Formulation.

The following combination of Constraint techniques can be selected in the Constraint Setting sections of Wall boundary conditions:

- Use default settings. The default settings use different constraint methods depending on whether only the normal component of the velocity is prescribed, such as in the no penetration condition, $\mathbf{u} \cdot \mathbf{n} = 0$, imposed for example in Slip walls or No Slip walls using Wall Functions or Automatic Wall Treatment, or both tangential and normal components are prescribed, as is the case of No Slip walls in laminar flow.

  DG constraints are used to impose the no penetration condition for Slip walls. When a No Slip condition is prescribed, pointwise constraints are used except for moving walls where DG constraints are used.
- Use Pointwise constraints.
- Use DG constraints.
- Use Weak constraints. Weak constraints are not available on Interior Walls.
- Use Mixed constraints. This option is only available when both the tangential and normal components of the velocity need to be prescribed. The velocity on the wall normal direction is imposed via pointwise constraints. The constraint for the tangential directions is relaxed, and DG constraints are used instead. This provides improved accuracy and performance when working with coarse boundary layer meshes. For more information, see Ref. 18.

Prescribing Inlet and Outlet Conditions

The Navier-Stokes equations can show large variations in mathematical behavior, ranging from almost completely elliptic to almost completely hyperbolic. This has implications when it comes to prescribing admissible boundary conditions. There is also a discrepancy between mathematically valid boundary conditions and practically useful boundary conditions. See Inlet and Outlet for the node settings.

INLET CONDITIONS

An inlet requires specification of the velocity components. The most robust way to do this is to prescribe a velocity field using a Velocity condition.

A common alternative to prescribing the complete velocity field is to prescribe a pressure and all but one velocity component. The pressure cannot be specified pointwise because this is mathematically over-constraining. Instead the pressure can be specified via a stress condition:

$$-p + 2\mu \frac{\partial u_n}{\partial n} = F_n \tag{13-10}$$

where $\partial u_n / \partial n$ is the normal derivative of the normal velocity component. Equation 13-10 is prescribed by the Pressure condition in the Inlet and Outlet features and the Normal stress condition in the Open Boundary and Boundary Stress features. Equation 13-10 is mathematically more stringent compared to specifying the pressure

pointwise and at the same time cannot guarantee that p obtains the desired value. In practice, p is close to F_n, except for low Reynolds number flows where viscous effects are the only effects that balance the pressure. In addition to Equation 13-10, all but one velocity component must be specified. For low Reynolds numbers, this can be specified by a vanishing tangential stress condition:

$$\mu\frac{\partial u_t}{\partial n} = 0$$

which is what the Normal stress condition does. Vanishing tangential stress becomes a less well-posed inlet condition as the Reynolds number increases. The Pressure condition in the Inlet feature therefore requires a flow direction to be prescribed, which provides a well-posed condition independent of Reynolds number.

OUTLET CONDITIONS

The most common approach is to prescribe a pressure via a normal stress condition on the outlet. This is often accompanied by a vanishing tangential stress condition:

$$\mu\frac{\partial u_t}{\partial n} = 0$$

where $\partial u_t/\partial n$ is the normal derivative of the tangential velocity field. It is also possible to prescribe u_t to be zero. The latter option should be used with care since it can have a significant effect on the upstream solution.

The elliptic character of the Navier-Stokes equations mathematically permit specifying a complete velocity field at an outlet. This can, however, be difficult to apply in practice. The reason being that it is hard to prescribe the outlet velocity so that it is consistent with the interior solution at each point. The adjustment to the specified velocity then occurs across an outlet boundary layer. The thickness of this boundary layer depends on the Reynolds number; the higher the Reynolds number, the thinner the boundary layer.

	Normal Stress Boundary Condition

Normal Stress Boundary Condition

The total stress on the boundary is set equal to a stress vector of magnitude f_0, oriented in the negative normal direction:

$$\left(-p\mathbf{I}+\left(\mu(\nabla\mathbf{u}+(\nabla\mathbf{u})^T)-\frac{2}{3}\mu(\nabla\cdot\mathbf{u})\mathbf{I}\right)\right)\mathbf{n} = -f_0\mathbf{n}$$

$$(-p\mathbf{I}+\mu(\nabla\mathbf{u}+(\nabla\mathbf{u})^T))\mathbf{n} = -f_0\mathbf{n}$$

using the compressible/weakly compressible and the incompressible formulation, respectively.

This implies that the total stress in the tangential direction is zero. This boundary condition implicitly sets a constraint on the pressure which for 2D flows is

$$p = 2\mu\frac{\partial u_n}{\partial n}+f_0 \tag{13-11}$$

If $\partial u_n/\partial n$ is small, Equation 13-11 states that $p \approx f_0$.

The Normal Stress condition is the mathematically correct version of the Pressure Conditions condition (Ref. 4), but it is numerically less stable.

Pressure Boundary Condition

For single-phase flow, a mathematically correct natural boundary condition for outlets is

$$\left(-p\mathbf{I}+\mu(\nabla\mathbf{u}+(\nabla\mathbf{u})^T)-\frac{2}{3}\mu(\nabla\cdot\mathbf{u})\mathbf{I}\right)\mathbf{n} = -p_0\mathbf{n} \tag{13-12}$$

$$(-p\mathbf{I}+\mu(\nabla\mathbf{u}+(\nabla\mathbf{u})^T))\mathbf{n} = -p_0\mathbf{n} \tag{13-13}$$

using the compressible/weakly compressible and the incompressible formulation, respectively.

This is a normal stress condition together with a no-tangential-stress condition. When $\mu > 0$, Equation 13-12 or Equation 13-13 can be supplemented with a tangential velocity condition

$$\mathbf{u}\cdot\mathbf{t} = 0 \tag{13-14}$$

If so, the no-tangential-stress condition is overridden. An issue with Equation 13-12 or Equation 13-13 is that it does not strongly enforce unidirectional flow on the boundary. If the prescribed pressure on an outlet is too high, parts of the outlet can actually have inflow. This is not as much of an issue for the Navier-Stokes equations as it is an issue for scalar transport equations solved along with the Navier-Stokes equations. Hence, when applying the **Pressure** boundary condition at an outlet or inlet you can further constrain the flow. With the Suppress backflow option

$$\begin{gathered}\left(-p\mathbf{I}+\mu(\nabla\mathbf{u}+(\nabla\mathbf{u})^T)-\frac{2}{3}\mu(\nabla\cdot\mathbf{u})\mathbf{I}\right)\mathbf{n} = -\hat{p}_0\mathbf{n}\\ (-p\mathbf{I}+\mu(\nabla\mathbf{u}+(\nabla\mathbf{u})^T))\mathbf{n} = -\hat{p}_0\mathbf{n}\\ \hat{p}_0 \le p_0\end{gathered}, \tag{13-15}$$

the normal stress is adjusted to keep

$$\mathbf{u}\cdot\mathbf{n} \ge 0 \tag{13-16}$$

Equation 13-15 effectively means that the prescribed pressure is p_0 if $\mathbf{u}\cdot\mathbf{n} \ge 0$, but smaller at locations where $\mathbf{u}\cdot\mathbf{n} < 0$. This means that Equation 13-15 does not completely prevent backflow, but the backflow is substantially reduced. Backflow is suppressed also when external forces are acting on the fluid, provided the magnitude of these forces are of the same order as the dynamic pressure at the outlet.

A pressure condition can also be applied at an inlet. In this case, either the normal stress is prescribed

$$\begin{gathered}\mathbf{n}^T\left(-p\mathbf{I}+\mu(\nabla\mathbf{u}+(\nabla\mathbf{u})^T)-\frac{2}{3}\mu(\nabla\cdot\mathbf{u})\mathbf{I}\right)\mathbf{n} = -\hat{p}_0\\ \mathbf{n}^T(-p\mathbf{I}+\mu(\nabla\mathbf{u}+(\nabla\mathbf{u})^T))\mathbf{n} = -\hat{p}_0\\ \hat{p}_0 \ge p_0\end{gathered} \tag{13-17}$$

together with the tangential condition in Equation 13-14, or, a general flow direction is prescribed.

$$\mathbf{r}_{\mathbf{u}}^T\left(-p\mathbf{I}+\mu(\nabla\mathbf{u}+(\nabla\mathbf{u})^T)-\frac{2}{3}\mu(\nabla\cdot\mathbf{u})\mathbf{I}\right)\mathbf{n}=-\hat{p}_0(\mathbf{r}_{\mathbf{u}}\cdot\mathbf{n})$$
$$\mathbf{r}_{\mathbf{u}}^T(-p\mathbf{I}+\mu(\nabla\mathbf{u}+(\nabla\mathbf{u})^T))\mathbf{n}=-\hat{p}_0(\mathbf{r}_{\mathbf{u}}\cdot\mathbf{n})$$
$$\hat{p}_0\geq p_0 \tag{13-18}$$
$$\mathbf{u}-(\mathbf{u}\cdot\mathbf{r}_{\mathbf{u}})\mathbf{r}_{\mathbf{u}}=\mathbf{0},\ \mathbf{r}_{\mathbf{u}}=\frac{\mathbf{d}_{\mathbf{u}}}{\|\mathbf{d}_{\mathbf{u}}\|}$$

The ">" option is used with suppress backflow to have $\mathbf{u}\cdot\mathbf{n}\leq 0$ or $\mathbf{u}\cdot\mathbf{r}_{\mathbf{u}}\geq 0$.

See Inlet, Outlet, Open Boundary, and No Viscous Stress for the individual node settings. Note that some modules have additional theory sections describing options available with that module.

Mass Sources for Fluid Flow

There are two types of mass sources in a Single-Phase Flow interface: point sources and line sources.

	These features require at least one of the following licenses: Batteries & Fuel Cells Module, CFD Module, Chemical Reaction Engineering Module, Corrosion Module, Electrochemistry Module, Electrodeposition Module, Microfluidics Module, Pipe Flow Module, or Subsurface Flow Module.

POINT SOURCE

A point source is theoretically formed by taking a mass injection/ejection, $\dot{Q}$ (SI unit: kg/(m^3·s)), in a small volume δV and then letting the size of the volume tend to zero while keeping the total mass flux constant. Given a point source strength, $\dot{q}_{\mathrm{p}}$ (SI unit: kg/s), this can be expressed as

$$\lim_{\delta V\to 0}\int_{\delta V}\dot{Q}=\dot{q}_{\mathrm{p}} \tag{13-19}$$

An alternative way to form a point source/sink is to assume that mass is injected/extracted through the surface of a small object. Letting the object surface area tend to zero while keeping the mass flux constant, results in the same point source. For this alternative approach, effects resulting from the physical object volume, such as drag and fluid displacement, need to be neglected.

The weak contribution

$$\dot{q}_{\mathrm{p}}\mathrm{test}(p)$$

is added to a point in the geometry. As can be seen from Equation 13-19, $\dot{Q}$ must tend to plus or minus infinity as δV tends to zero. This means that in theory the pressure also tends to plus or minus infinity.

Observe that "point" refers to the physical representation of the source. A point source can therefore only be added to points in 3D components and to points on the symmetry axis in 2D axisymmetry components. Other geometrical points in 2D components represent physical lines.

The finite element representation of Equation 13-19 corresponds to a finite pressure in a point with the effect of the point source spread out over a region around the point. The size of the region depends on the mesh and on the strength of the source. A finer mesh gives a smaller affected region, but also a more extreme pressure value. It is important not to mesh too finely around a point source since the resulting pressure can result in unphysical values for the density, for example. It can also have a negative effect on the condition number for the equation system.

LINE SOURCE

A line source can theoretically be formed by assuming a source of strength $\dot{Q}$ (SI unit: kg/(m^3·s)), located within a tube with cross-sectional area δS and then letting δS tend to zero, while keeping the total mass flux per unit length constant. Given a line source strength, $\dot{q}_l$ (SI unit: kg/(m·s)), this can be expressed as

$$\lim_{\delta S \to 0} \int_{\delta S} \dot{Q} = \dot{q}_l \tag{13-20}$$

As in the point source case, an alternative approach is to assume that mass is injected/extracted through the surface of a small object. This results in the same mass source, but requires that effects on the fluid resulting from the physical object volume are neglected.

The weak contribution

$$\dot{q}_l \mathrm{test}(p)$$

is added to lines in 3D or to points in 2D (which represent cut-through views of lines). Line sources can also be added to the axisymmetry line in 2D axisymmetry components. It cannot, however, be added to geometrical lines in 2D because they represent physical planes.

As with a point source, it is important not to mesh too finely around the line source.

	For feature node information, see Line Mass Source and Point Mass Source.

	For the Reacting Flow in Porous Media, Diluted Species interface, which is available with the CFD Module, Chemical Reaction Engineering Module, or Batteries & Fuel Cells Module, these shared physics nodes are renamed as follows: • The **Line Mass Source** node is available as two nodes, one for the fluid flow (**Fluid Line Source**) and one for the species (**Species Line Source**). • The **Point Mass Source** node is available as two nodes, one for the fluid flow (**Fluid Point Source**) and one for the species (**Species Point Source**).

Numerical Stability — Stabilization Techniques for Fluid Flow

The momentum equation (Equation 13-7 or Equation 13-9) is a (nonlinear) convection-diffusion equation. Such equations can easily become unstable if discretized using the Galerkin finite element method. Stabilized finite element methods are usually necessary in order to obtain physical solutions. The stabilization settings are found in the main Fluid Flow interface features. To display this section, click the **Show More Options** button ( ) and select **Stabilization** in the **Show More Options** dialog box.

There are three types of stabilization methods available for Navier-Stokes — *streamline diffusion*, *crosswind diffusion*, and *isotropic diffusion*. Streamline diffusion and crosswind diffusion are consistent stabilization methods, whereas isotropic diffusion is an inconsistent stabilization method.

For optimal functionality, the exact weak formulations of and constants in the streamline diffusion and crosswind diffusion methods depend on the order of the shape functions (basis functions) for the elements. The values of constants in the streamline diffusion and crosswind diffusion methods follow Ref. 5 and Ref. 6.

STREAMLINE DIFFUSION

For strongly coupled systems of equations, the streamline diffusion method must be applied to the system as a whole rather than to each equation separately. These ideas were first explored by Hughes and Mallet (Ref. 8) and were later extended to Galerkin least-squares (GLS) applied to the Navier-Stokes equations (Ref. 9). This is the streamline diffusion formulation that COMSOL Multiphysics supports. The time-scale tensor is the diagonal tensor presented in Ref. 10.

The time-scale tensors for time-dependent problems should in theory depend on a time-scale that many references just set to the time-step taken by the time-solver, Δt (see for example Ref. 9 and Ref. 10). This simple approach doesn't however necessarily reflect on the actual time-scales in the physics. A typical example is reacting flows where the time-step is often guided by fast reactions, while the flow develops relatively slowly. COMSOL Multiphysics can therefore replace Δt^2 in the time scale tensor with measures of type $(1/(\Delta\tilde{t})^2)^{-1}$ which are calculated from projections of weak expressions in a fashion similar to those in Ref. 11. These measures of the time scale are used when **Use dynamic subgrid timescale** check box is selected. Streamline diffusion is active by default because it is necessary when convection is dominating the flow.

The governing equations for incompressible flow are subject to the Babuška-Brezzi condition, which states that the shape functions (basis functions) for pressure must be of lower order than the shape functions for velocity. If the incompressible Navier-Stokes equations are stabilized by streamline diffusion, it is possible to use equal-order interpolation. Hence, streamline diffusion is necessary when using first-order elements for both velocity and pressure. This applies also if the model is solved using geometric multigrid (either as a solver or as a preconditioner) and at least one multigrid hierarchy level uses linear Lagrange elements.

CROSSWIND DIFFUSION

Crosswind diffusion can also be formulated for systems of equations, and when applied to the Navier-Stokes equations it becomes a shock-capturing operator. COMSOL Multiphysics supports the formulation in Ref. 9 with a shock-capturing viscosity of the Hughes-Mallet type Ref. 8.

Incompressible flows do not contain shock waves, but crosswind diffusion is still useful for introducing extra diffusion in sharp boundary layers and shear layers that otherwise would require a very fine mesh to resolve.

Crosswind diffusion is active by default as it makes it easier to obtain a solution even if the problem is fully resolved by the mesh. Crosswind diffusion also enables the iterative solvers to use inexpensive presmoothers. If crosswind diffusion is deactivated, more expensive preconditioners must be used instead.

ISOTROPIC DIFFUSION

Isotropic diffusion adds diffusion to the Navier-Stokes equations. Isotropic diffusion significantly reduces the accuracy of the solution but does a very good job at reducing oscillations. The stability of the continuity equation is not improved.

Numerical Stabilization and Iterative

Solvers for Laminar Flow

The Navier-Stokes equations constitute a nonlinear equation system. A nonlinear solver must hence be applied to solve the problem. The nonlinear solver iterates to reach the final solution. In each iteration, a linearized version of the nonlinear system is solved using a linear solver. In the time-dependent case, a time marching method must also be applied. The default suggestions for each of these solver elements are discussed below.

NONLINEAR SOLVER

The nonlinear solver method depends on if the model solves a stationary or a time-dependent problem.

Stationary Solver

In the stationary case, a fully coupled, damped Newton method is applied. The initial damping factor is low since a full Newton step can be harmful unless the initial values are close to the final solution. The nonlinear solver algorithm automatically regulates the damping factor in order to reach a converged solution.

For advanced models, the automatically damped Newton method might not be robust enough. A pseudo time-stepping algorithm can then be invoked. See Pseudo Time Stepping for Laminar Flow Models.

Time-Dependent Solver

In the time-dependent case, the initial guess for each time step is (loosely speaking) the previous time step, which is a very good initial value for the nonlinear solver. The automatic damping algorithm is then not necessary. The damping factor in the Newton method is instead set to a constant value slightly smaller than one. Also, for the same reason, it suffices to update the Jacobian once per time-step.

It is seldom worth the extra computational cost to update the Jacobian more than once per time step. For most models it is more efficient to restrict the maximum time step or possibly lower the damping factor in the Newton method.

LINEAR SOLVER

The linearized Navier-Stokes equation system has saddle point character, unless the density depends on the pressure. This means that the Jacobian matrix has zeros on the diagonal. Even when the density depends on the pressure, the equation system effectively shares many numerical properties with a saddle point system.

For small 2D and 3D models, the default solver suggestion is a direct solver. Direct solvers can handle most nonsingular systems and are very robust and also very fast for small models. Unfortunately, they become slow for large models and their memory requirement scales as somewhere between $N^{1.5}$and N^2, where N is the number of degrees of freedom in the model. The default suggestion for large 2D and 3D models is therefore the iterative GMRES solver. The memory requirement for an iterative solver optimally scales as N.

GMRES is accelerated by a multigrid method, per default the Smoothed Aggregation Algebraic Mutligrid (SAAMG) method. The cost of SAAMG is typically very low compared to the number of GMRES iterations necessary if no multigrid method is used. As the name implies, SAAMG builds its coarser meshes algebraically, so the application requires no additional meshes in order to employ SAAMG. In contrast, Geometric Multigrid (GMG) requires actual meshes. If a sufficient number of multigrid levels can be constructed, GMG is often faster than SAAMG. GMG is also superior for cluster computations and for shared memory computations with many cores. When the default linear solver is GMRES, an optional, but deactivated, linear solver node is available where GMRES is accelerated by GMG.

Multigrid methods need smoothers, but the saddle point character of the linear system restricts the number of applicable smoothers. The choices are further restricted by the anisotropic meshes frequently encountered in fluid-flow problems. The efficiency of the smoothers is highly dependent on the numerical stabilization. Iterative solvers perform at their best when both Streamline Diffusion and Crosswind Diffusion are active.

The default smoother for P1+P1 elements is SCGS. This is an efficient and robust smoother specially designed to solve saddle point systems on meshes that contain anisotropic elements. The SCGS smoother works well even without crosswind diffusion. SCGS can sometimes work for higher-order elements, especially if **Method** in the SCGS settings is set to **Mesh element lines**. But there is no guarantee for this, so the default smoother for higher order elements is an SOR Line smoother. SOR Line handles mesh anisotropy but does not formally address the saddle point character. It does, however, function in practice provided that streamline diffusion and crosswind diffusion are both active.

A different kind of saddle point character can arise if the equation system contains ODE variables. Some advanced boundary conditions can add equations with such variables. These variables must be treated with the Vanka algorithm. SCGS includes an option to invoke Vanka. Models with higher-order elements must apply SCGS or use the Vanka smoother. The latter is the default suggestion for higher-order elements, but it does not work optimally for anisotropic meshes.

TIME-DEPENDENT SOLVERS

The default time-dependent solver for Navier-Stokes is the BDF method with maximum order set to two. Higher BDF orders are not stable for transport problems in general nor for Navier-Stokes in particular.

BDF methods have been used for a long time and are known for their stability. However, they can have severe damping effects, especially the lower-order methods. Hence, if robustness is not an issue, a model can benefit from using the generalized-α method instead. Generalized-α is a solver which has properties similar to those of the second-order BDF solver but it is much less diffusive.

Both BDF and generalized-α are per default set to automatically adjust the time step. While this works well for many models, extra efficiency and accuracy can often be gained by specifying a maximum time step. It is also often beneficial to specify an initial time step to make the solver progress smoothly in the beginning of the time series.

- Time-Dependent Solver
- Multigrid, Direct, Iterative, SCGS, SOR Line, and Vanka
- Stationary Solver

Pseudo Time Stepping for Laminar Flow Models

A stationary formulation has per definition no time derivatives and Equation 13-9 reduces to:

$$\rho(\mathbf{u}\cdot\nabla)\mathbf{u} = \nabla\cdot[-p\mathbf{I}+\mu(\nabla\mathbf{u}+(\nabla\mathbf{u})^T)]+\mathbf{F} \tag{13-21}$$

Solving Equation 13-21 requires a starting guess that is close enough to the final solution. If no such guess is at hand, the fully transient problem can be solved instead. This is, however, a rather costly approach in terms of computational time. An intermediate approach is to add a fictitious time derivative to Equation 13-21:

$$\rho\frac{\mathbf{u}-\mathrm{nojac}(\mathbf{u})}{\Delta\tilde{t}}+\rho(\mathbf{u}\cdot\nabla)\mathbf{u} = \nabla\cdot[-p\mathbf{I}+\mu(\nabla\mathbf{u}+(\nabla\mathbf{u})^T)]+\mathbf{F}$$

where $\Delta\tilde{t}$ is a *pseudo time step*. Since $\mathbf{u}-\mathtt{nojac}(\mathbf{u})$ is always zero, this term does not affect the final solution. It does, however, affect the discrete equation system and effectively transforms a nonlinear iteration into a step of size $\Delta\tilde{t}$ of a time-dependent solver.

Pseudo time stepping is not active per default. The pseudo time step $\Delta\tilde{t}$ can be chosen individually for each element based on the local CFL number:

$$\Delta\tilde{t} = \mathrm{CFL}_{\mathrm{loc}}\frac{h}{|\mathbf{u}|}$$

where h is the mesh cell size. A small CFL number means a small time step. It is practical to start with a small CFL number and gradually increase it as the solution approaches steady state.

If the automatic expression for $\mathrm{CFL}_{\mathrm{loc}}$ is set to the built-in variable `CFLCMP`, then the automatic setting suggests a PID regulator for the pseudo time step in the default solver. The PID regulator starts with a small CFL number and increases $\mathrm{CFL}_{\mathrm{loc}}$ as the solution comes closer to convergence.

The default manual expression is

$$
\begin{gathered}
1.3^{\min(\text{niterCMP},\,9)} + \\
\text{if}(\text{niterCMP} > 20,\, 9 \cdot 1.3^{\min(\text{niterCMP}-20,\,9)},\, 0) + \\
\text{if}(\text{niterCMP} > 40,\, 90 \cdot 1.3^{\min(\text{niterCMP}-40,\,9)},\, 0)
\end{gathered}
\tag{13-22}
$$

The variable `niterCMP` is the nonlinear iteration number. It is equal to one for the first nonlinear iteration. $\mathrm{CFL}_{\mathrm{loc}}$ starts at 1.3 and increases by 30% each iteration until it reaches $1.3^9 \approx 10.6$. It remains there until iteration number 20 at which it starts to increase until it reaches approximately 106. A final increase after iteration number 40 then takes it to 1060. Equation 13-22 can, for some advanced flows, increase $\mathrm{CFL}_{\mathrm{loc}}$ too slowly or too quickly. $\mathrm{CFL}_{\mathrm{loc}}$ can then be tuned for the specific application.

For details about the CFL regulator, see Pseudo Time Stepping.

Discontinuous Galerkin Formulation

Some boundary conditions are implemented using a discontinuous Galerkin formulation. These boundary conditions include

- Wall — Slip, sliding walls, and moving walls (that is, walls with nonzero translational velocity).
- Periodic Flow Condition
- Flow Continuity

The formulation used in the Fluid Flow interfaces in COMSOL Multiphysics is the Symmetric Interior Penalty Galerkin method (SIPG). The SIPG method can be regarded to satisfy the boundary conditions in an integral sense rather than pointwise. More information on SIPG can be found in Ref. 15.

In particular, the SIPG formulation includes a penalty parameter that must be large enough for the formulation to be coercive. The higher the value, the better the boundary condition is fulfilled, but a too high value results in an ill-conditioned equation system. The penalty parameter in COMSOL Multiphysics is implemented according to Ref. 16.

Particle Tracing in Fluid Flow

The Particle Tracing Module is available to assist with these types of modeling problems.

It is possible to model particle tracing with COMSOL Multiphysics provided that the impact of the particles on the flow field is negligible. First compute the flow field, and then, as an analysis step, calculate the motion of the particles. The motion of a particle is defined by Newton's second law

$$
m\frac{d^2\mathbf{x}}{dt^2} = \mathbf{F}\left(t, \mathbf{x}, \frac{d\mathbf{x}}{dt}\right)
$$

where $\mathbf{x}$ is the position of the particle, m the particle mass, and $\mathbf{F}$ is the sum of all forces acting on the particle. Examples of forces acting on a particle in a fluid are the drag force, the buoyancy force, and the gravity force. The drag force represents the force that a fluid exerts on a particle due to a difference in velocity between the fluid and the particle. It includes the viscous drag, the added mass, and the Basset history term. Several empirical expressions have been suggested for the drag force. One of those is the one proposed by Khan and Richardson (Ref. 13). That expression is valid for spherical particles for a wide range of particle Reynolds numbers. The particle Reynolds number is defined as

$$\mathrm{Re}_p = \frac{|\mathbf{u} - \mathbf{u}_p| 2r\rho}{\mu}$$

where $\mathbf{u}$ is the velocity of the fluid, $\mathbf{u}_p$ the particle velocity, r the particle radius, ρ the fluid density, and μ the dynamic viscosity of the fluid. The empirical expression for the drag force according to Khan and Richardson is

$$\mathbf{F} = \pi r^2 \rho |\mathbf{u} - \mathbf{u}_p| (\mathbf{u} - \mathbf{u}_p)[1.84\mathrm{Re}_p^{-0.31} + 0.293\mathrm{Re}_p^{0.06}]^{3.45}$$

	The model *Flow Past a Cylinder* (Application Library path **COMSOL_Multiphysics/Fluid_Dynamics/cylinder_flow**) demonstrates how to add and set up particle tracing in a plot group using the **Particle Tracing with Mass** node. It uses the predefined Khan-Richardson model for the drag force and neglects gravity and buoyancy forces.

References for the Single-Phase Flow, Laminar Flow Interfaces

1. G.G. Stokes, Trans. Camb. Phil. Soc., 8, pp. 287–305, 1845

2. P.M. Gresho and R.L. Sani, *Incompressible Flow and the Finite Element Method, Volume 2: Isothermal Laminar Flow*, John Wiley & Sons, 2000.

3. G.K. Batchelor, *An Introduction To Fluid Dynamics*, Cambridge University Press, 1967.

4. R.L. Panton, *Incompressible Flow*, 2nd ed., John Wiley & Sons, 1996.

5. I. Harari and T.J.R. Hughes, "What are *C* and *h*? Inequalities for the Analysis and Design of Finite Element Methods", *Comp. Meth. Appl. Mech. Engrg*, vol. 97, pp. 157–192, 1992.

6. Y. Bazilevs, V.M. Calo, T.E. Tezduyar, and T.J.R. Hughes, "YZβ Discontinuity Capturing for Advection-dominated Processes with Application to Arterial Drug Delivery", *Int.J.Num. Meth. Fluids*, vol. 54, pp. 593–608, 2007.

7. R.B. Bird,W.E. Stewart, and E.N. Lightfoot, Transport Phenomena, 2nd ed., John Wiley&Sons, 2007.

8. T.J.R. Hughes and M. Mallet, "A New Finite Element Formulation for Computational Fluid Dynamics: III. The Generalized Streamline Operator for Multidimensional Advective-Diffusive System", *Comp. Meth. Appl. Mech. Engrg*, vol. 58, pp. 305–328, 1986.

9. G. Hauke and T.J.R. Hughes, "A Unified Approach to Compressible and Incompressible Flows", *Comp. Meth. Appl. Mech. Engrg*, vol. 113, pp. 389–395, 1994.

10. G. Hauke, "Simple Stabilizing Matrices for the Computation of Compressible Flows in Primitive Variables", *Comp. Meth. Appl. Mech. Engrg*, vol. 190, pp. 6881–6893, 2001.

11. M.-C. Hsu, Y. Bazilevs, V.M. Cali, T.E. Tezduyar, and T.J.R. Hughes, "Improving stability of stabilized and multiscale formulations in flow simulations at small time steps", *Comp. Meth. Appl. Mech. Engrg*, vol. 199, pp. 828–840, 2010.

12. D.J. Tritton, *Physical Fluid Dynamics*, 2nd ed., Oxford University Press, 1988.

13. J.M. Coulson and J.F. Richardson, "Particle Technology and Separation Processes", *Chemical Engineering, Volume 2*, Butterworth-Heinemann, 2002.

14. J.L. Guermond, P. Minev, and J. Shen, "An overview of projection methods for incompressible flows", *Comp. Meth. Appl. Mech. Engrg*, vol. 195, pp. 6011–6045, 2006.

15. B. Rivière, *Discontinuous Galerkin Methods for Solving Elliptic and Parabolic Equations*, SIAM, 2008.

16. Y. Epshteyn and B. Rivière, "Estimation of penalty parameters for symmetric interior penalty Galerkin methods", *J. Computational and Applied Mathematics*, vol. 206, pp. 843–872, 2007.

17. R.P. Chhabra and J.F. Richardson, *Non-Newtonian Flow and Applied Rheology*, 2nd ed., Elsevier, 2008.

18. Y. Bazilevs and T.J.R. Hughes, "Weak imposition of Dirichlet boundary conditions in fluid mechanics", *Computers and Fluids*, vol. 36, pp. 12–26, 2007.

The Single-Phase Flow, Laminar Flow Interface

In this section:

- The Laminar Flow Interface
- Domain, Boundary, Pair, and Point Nodes for Single-Phase Flow

	• Theory of Laminar Flow

In the *COMSOL Multiphysics Reference Manual*, see Table 2-4 for links to common sections such as **Discretization**, **Consistent Stabilization**, **Inconsistent Stabilization**, and **Advanced Settings** sections, some of them accessed by clicking the **Show** button ( ) and choosing the applicable option. You can also search for information: press F1 to open the **Help** window or Ctrl+F1 to open the **Documentation** window.

The Laminar Flow Interface

The **Laminar Flow (spf)** interface ( ) is used to compute the velocity and pressure fields for the flow of a single-phase fluid in the laminar flow regime. A flow remains laminar as long as the Reynolds number is below a certain critical value. At higher Reynolds numbers, disturbances have a tendency to grow and cause transition to turbulence. This critical Reynolds number depends on the model, but a classical example is pipe flow, where the critical Reynolds number is known to be approximately 2000.

The physics interface supports incompressible flow, weakly compressible flow (the density depends on temperature but not on pressure), and compressible flow at low Mach numbers (typically less than 0.3). It also supports flow of non-Newtonian fluids.

The equations solved by the Laminar Flow interface are the Navier-Stokes equations for conservation of momentum and the continuity equation for conservation of mass.

The Laminar Flow interface can be used for stationary and time-dependent analyses. Time-dependent studies should be used in the high-Reynolds number regime as these flows tend to become inherently unsteady.

When the Laminar Flow interface is added, the following default nodes are also added in the **Model Builder**: **Fluid Properties**, **Wall** (the default boundary condition is **No slip**), and **Initial Values**. Other nodes that implement, for example, boundary conditions and volume forces, can be added from the **Physics** toolbar or from the context menu displayed when right-clicking **Laminar Flow**.

SETTINGS

The **Label** is the default physics interface name.

The **Name** is used primarily as a scope prefix for variables defined by the physics interface. Physics interface variables can be referred to using the pattern `<name>.<variable_name>`. In order to distinguish between variables belonging to different physics interfaces, the `name` string must be unique. Only letters, numbers, and underscores (_) are permitted in the **Name** field. The first character must be a letter.

The default **Name** (for the first physics interface in the model) is `spf`.

PHYSICAL MODEL

Compressibility

Depending of the fluid properties and the flow regime, three options are available for the **Compressibility** option. In general the computational complexity increases from **Incompressible flow** to **Weakly compressible flow** to **Compressible flow (Ma<0.3)** but the underlying hypotheses are increasingly more restrictive in the opposite direction.

When the **Incompressible flow** option (default) is selected, the incompressible form of the Navier-Stokes and continuity equations is applied. In addition, the fluid density is evaluated at the **Reference pressure level** defined in this section. The **Reference temperature** is set to 293.15 K.

The **Weakly compressible flow** option models compressible flow when the pressure dependency of the density can be neglected. When selected, the compressible form of the Navier-Stokes and continuity equations is applied. In addition, the fluid density is evaluated at the **Reference pressure level** defined in this section.

When the **Compressible flow (Ma<0.3)** option is selected, the compressible form of the Navier-Stokes and continuity equations is applied. $\mathrm{Ma} < 0.3$ indicates that the inlet and outlet conditions, as well as the stabilization, may not be suitable for transonic and supersonic flow. For more information, see The Mach Number Limit.

Porous Media Domains

With the addition of various modules, the **Enable porous media domains** check box is available. Selecting this option, a **Fluid and Matrix Properties** node, a **Mass Source** node, and a **Forchheimer Drag** subnode are added to the physics interface. These are described for the **Brinkman Equations** interface in the respective module's documentation. The **Fluid and Matrix Properties** can be applied on all domains or on a subset of the domains.

Reference values

Reference values are global quantities used to evaluate the density of the fluid when the **Incompressible flow** or the **Weakly compressible flow** option is selected.

Reference pressure level There are generally two ways to include the pressure in fluid flow computations: either to use the absolute pressure $p_A=p+p_{\mathrm{ref}}$, or the gauge pressure p. When p_{ref} is nonzero, the physics interface solves for the gauge pressure whereas material properties are evaluated using the absolute pressure. The reference pressure level is also used to define the reference density.

Reference temperature The reference temperature is used to define the reference density.

Reference position When **Include gravity** is selected, the reference position can be defined. It corresponds to the location where the total pressure (that includes the hydrostatic pressure) is equal to the **Reference pressure level**.

DEPENDENT VARIABLES

The following dependent variables (fields) are defined for this physics interface — the **Velocity field** $\mathbf{u}$ and its components, and the **Pressure** p.

If required, the names of the field, component, and dependent variable can be edited. Editing the name of a scalar dependent variable changes both its field name and the dependent variable name. If a new field name coincides with the name of another field of the same type, the fields share degrees of freedom and dependent variable names. A new field name must not coincide with the name of a field of another type or with a component name belonging to some other field. Component names must be unique within a model except when two fields share a common field name.

CONSISTENT STABILIZATION

To enable this section, click the **Show More Options** button ( ) and select **Stabilization** in the **Show More Options** dialog box.

There are two *consistent stabilization methods*: **Streamline diffusion** and **Crosswind diffusion**. Usually, both check boxes for these methods are selected by default and should remain selected for optimal performance. Consistent stabilization methods do not perturb the original transport equation. Streamline diffusion must be selected when using equal-order interpolation for pressure and velocity.

Select the **Use dynamic subgrid time scale** check box to approximate the time-scale tensor in time dependent problems from projections of weak expressions. This check box is selected by default. When not selected the actual time-step is used.

INCONSISTENT STABILIZATION

To enable this section, click the **Show More Options** button ( ) and select **Stabilization** in the **Show More Options** dialog box.

There is usually just one *inconsistent stabilization method* — **Isotropic diffusion**. This method is equivalent to adding a term to the diffusion coefficient in order to dampen the effect of oscillations by making the system somewhat less dominated by convection. If possible, minimize the use of the inconsistent stabilization method because by using it you no longer solve the original problem. By default, the **Isotropic diffusion** check box is not selected because this type of stabilization adds artificial diffusion and affects the accuracy of the original problem. However, this option can be used to get a good initial guess for underresolved problems.

If required, select the **Isotropic diffusion** check box and enter a **Tuning parameter** δ_{id} as a scalar positive value. The default value is 0.25 (a reasonable value to start with is roughly 0.5 divided by the element order). A higher value adds more isotropic diffusion.

- Numerical Stability — Stabilization Techniques for Fluid Flow

ADVANCED SETTINGS

To display this section, click the **Show More Options** button ( ) and select **Advanced Physics Options** in the **Show More Options** dialog box. Normally these settings do not need to be changed.

The **Use pseudo time stepping for stationary equation form** is per default set to **Automatic from physics**. This option can add pseudo time derivatives to the equation when the **Stationary equation** form is used in order to speed up convergence. Pseudo time stepping is triggered when the Laminar Flow interface is selected in some multiphysics coupling features. Set **Automatic from physics** to **On** to apply pseudo time stepping also for laminar flows. Set it to **Off** to disable pseudo time stepping completely.

When **Use pseudo time stepping for stationary equation form** is set to **Automatic from physics** or **On**, a **CFL number expression** should also be defined. For the default **Automatic** option, the local CFL number (from the Courant–Friedrichs–Lewy condition) is determined by a PID regulator.

- Pseudo Time Stepping for Laminar Flow Models
- Domain, Boundary, Pair, and Point Nodes for Single-Phase Flow
- Theory of Laminar Flow

DISCRETIZATION

The default discretization for Laminar Flow is **P1+P1** elements — that is, piecewise linear interpolation for velocity and pressure. This is suitable for most flow problems.

Some higher-order interpolations are also available, and they can be cost-effective options to obtain high accuracy for flows with low Reynolds numbers.

The **P2+P2** and **P3+P3** options, the equal-order interpolation options, are the preferred higher-order options because they have higher numerical accuracy than the mixed-order options **P2+P1** and **P3+P2**. The equal-order interpolation options do, however, require streamline diffusion to be active.

	Flow Past a Cylinder: Application Library path **COMSOL_Multiphysics/Fluid_Dynamics/cylinder_flow**

Domain, Boundary, Pair, and Point Nodes for Single-Phase Flow

The following nodes, listed in alphabetical order, are available from the **Physics** ribbon toolbar (Windows users), **Physics** context menu (Mac or Linux users), or by right-clicking to access the context menu (all users).

- Boundary Stress
- Flow Continuity
- Fluid Properties
- Initial Values
- Inlet
- Line Mass Source[1]
- Open Boundary
- Outlet
- Periodic Flow Condition
- Point Mass Source[1]
- Pressure Point Constraint
- Symmetry
- Volume Force
- Wall

[1] A feature that may require an additional license

	For 2D axisymmetric components, COMSOL Multiphysics takes the axial symmetry boundaries (at $r = 0$) into account and adds an **Axial Symmetry** node that is valid on the axial symmetry boundaries only.

In the *COMSOL Multiphysics Reference Manual*, see Table 2-4 for links to common sections and Table 2-5 to common feature nodes. You can also search for information: press F1 to open the **Help** window or Ctrl+F1 to open the **Documentation** window.

Fluid Properties

The **Fluid Properties** node adds the momentum and continuity equations solved by the physics interface, except for volume forces, which are added by the Volume Force feature. The node also provides an interface for defining the material properties of the fluid.

MODEL INPUTS

Fluid properties, such as density and viscosity, can be defined through user inputs, variables, or by selecting a material. For the latter option, additional inputs, for example temperature or pressure, may be required to define these properties.

Temperature

By default, the **Temperature** model input is set to **Common model input**, and the temperature is controlled from Default Model Inputs under **Global Definitions** or by a locally defined Model Input. If a Heat Transfer interface is included in the component, it controls the temperature **Common model input**. Alternatively, the temperature field can be selected from another physics interface. All physics interfaces have their own tags (**Name**). For example, if a Heat Transfer in Fluids interface is included in the component, the **Temperature (ht)** option is available for T.

You can also select **User defined** from the **Temperature** model input in order to manually prescribe T.

Absolute Pressure

This input appears when a material requires the absolute pressure as a model input. The absolute pressure is used to evaluate material properties, but it also relates to the value of the calculated pressure field. There are generally two ways to calculate the pressure when describing fluid flow: either to solve for the absolute pressure or for a pressure (often denoted gauge pressure) that relates to the absolute pressure through a reference pressure.

The choice of pressure variable depends on the system of equations being solved. For example, in a unidirectional incompressible flow problem, the pressure drop over the modeled domain is probably many orders of magnitude smaller than the atmospheric pressure, which, when included, may reduce the stability and convergence properties of the solver. In other cases, such as when the pressure is part of an expression for the gas volume or the diffusion coefficients, it may be more convenient to solve for the absolute pressure.

The default **Absolute pressure** p_A is $p+p_{\text{ref}}$, where p is the dependent pressure variable from the Navier-Stokes or RANS equations, and p_{ref} is from the user input defined at the physics interface level. When p_{ref} is nonzero, the physics interface solves for a gauge pressure. If the pressure field instead is an absolute pressure field, p_{ref} should be set to 0.

The **Absolute pressure** field can be edited by clicking **Make All Model Inputs Editable** ( ) and entering the desired value in the input field.

	Model Inputs and Multiphysics Couplings in the *COMSOL Multiphysics Reference Manual*

FLUID PROPERTIES

Density

The density can either be specified by a material, or by a **User defined** expression. The density in a material can depend on temperature and/or pressure and these dependencies are automatically replaced by p_{ref} for weakly compressible flows and p_{ref} and T_{ref} for incompressible flows (as specified by the **Compressibility** setting at the physics interface level). If density variations with respect to pressure are to be included in the computations, **Compressibility** must be set to compressible. Any dependencies in the density on quantities other than temperature and pressure must be consistent with the **Compressibility** setting at the interface level.

Dynamic Viscosity

The **Dynamic viscosity** μ describes the relationship between the shear rate and the shear stresses in a fluid. Intuitively, water and air have low viscosities, and substances often described as thick (such as oil) have higher viscosities.

Volume Force

The **Volume Force** node specifies the volume force $\mathbf{F}$ on the right-hand side of the momentum equation.

$$\rho\frac{\partial\mathbf{u}}{\partial t}+\rho(\mathbf{u}\cdot\nabla)\mathbf{u} = \nabla\cdot\left[-p\mathbf{I}+\mu(\nabla\mathbf{u}+(\nabla\mathbf{u})^T)-\frac{2}{3}\mu(\nabla\cdot\mathbf{u})\mathbf{I}\right]+\mathbf{F}$$

If several volume-force nodes are added to the same domain, then the sum of all contributions are added to the momentum equation.

Initial Values

The initial values serve as initial conditions for a transient simulation or as an initial guess for a nonlinear solver in a stationary simulation. Note that for a transient compressible-flow simulation employing a material for which the density depends on the pressure (such as air), discontinuities in the initial values trigger pressure waves even when the Mach number is small. The pressure waves must be resolved and this puts a restriction on the time step.

INITIAL VALUES

Initial values or expressions should be specified for the **Velocity field** $\mathbf{u}$ and the **Pressure** p.

Wall

The **Wall** node includes a set of boundary conditions describing fluid-flow conditions at stationary, moving, and leaking walls.

BOUNDARY CONDITION

Select a **Boundary condition** for the wall.

- No Slip
- Slip
- Leaking Wall

No Slip

No slip is the default boundary condition to model solid walls. A no slip wall is a wall where the fluid velocity relative to the wall velocity is zero. For a stationary wall that means that $\mathbf{u} = 0$.

Slip

The **Slip** option prescribes a no-penetration condition, $\mathbf{u}\cdot\mathbf{n}=0$. It is implicitly assumed that there are no viscous effects at the slip wall and hence, no boundary layer develops. From a modeling point of view, this can be a reasonable approximation if the main effect of the wall is to prevent fluid from leaving the domain.

Leaking Wall

This boundary condition may be used to simulate a wall where fluid is leaking into or leaving the domain with the velocity $\mathbf{u} = \mathbf{u}_l$ through a perforated wall. The components of the **Fluid velocity** $\mathbf{u}_l$ on the leaking wall should be specified.

WALL MOVEMENT

This section contains controls to describe the wall movement relative to the lab (or spatial) frame.

The **Translational velocity** setting controls the translational wall velocity, $\mathbf{u}_{tr}$. The list is per default set to **Automatic from frame**. The physics automatically detects if the spatial frame moves. This can for example happen if an ALE interface is present in the model component. If there is no movement $\mathbf{u}_{tr} = \mathbf{0}$. If the frame moves, $\mathbf{u}_{tr}$ becomes equal to the frame movement. $\mathbf{u}_{tr}$ is accounted for in the actual boundary condition prescribed in the **Boundary condition** section.

Select **Zero (Fixed wall)** from **Translational velocity** selection list to prescribe $\mathbf{u}_{tr} = \mathbf{0}$.

Select **Manual** from **Translational velocity** selection list in order to manually prescribe **Velocity of moving wall**, $\mathbf{u}_{tr}$. This can for example be used to model an oscillating wall where the magnitude of the oscillations are very small compared to the rest of the model. Specifying translational velocity manually does not automatically cause the

associated wall to move. An additional Moving Mesh interface needs to be added to physically track the wall movement in the spatial reference frame.

The **Sliding wall** option is appropriate if the wall behaves like a conveyor belt; that is, the surface is sliding in its tangential direction. A velocity is prescribed at the wall and the boundary itself does not have to actually move relative to the reference frame.

- For 3D components, values or expressions for the **Velocity of sliding wall** $\mathbf{u}_w$ should be specified. If the velocity vector entered is not in the plane of the wall, COMSOL Multiphysics projects it onto the tangential direction. Its magnitude is adjusted to be the same as the magnitude of the vector entered.
- For 2D components, the tangential direction is unambiguously defined by the direction of the boundary. For this reason, the sliding wall boundary condition has different definitions in different space dimensions. A single entry for the **Velocity of the tangentially moving wall** U_w should be specified in 2D.

CONSTRAINT SETTINGS

This section is displayed by clicking the **Show More Options** button ( ) and selecting **Advanced Physics Options** in the **Show More Options** dialog box. The **Constraints** settings can be set to **Default**, **Use pointwise constraints**, **Use DG constraints**, or **Use weak constraints**. **Use mixed constraints** can be selected when imposing a no slip condition exactly.

Depending on the constraint method selected, the following settings are available:

- **Apply reaction terms on** can be set to **Individual dependent variables** (default) or **All physics (symmetric)**. This setting is not available when **Use DG constraints** is selected.
- Select **Elemental** (default) or **Nodal** under **Constraint method**. This setting is not available for **Use DG constraints** or **Use weak constraints**.

	• Theory for the Wall Boundary Condition • The Moving Mesh Interface

Inlet

This condition should be used on boundaries for which there is a net flow into the domain. To obtain a numerically well-posed problem, it is advisable to also consider the Outlet conditions when specifying an Inlet condition. For example, if the pressure is specified at the outlet, the velocity may be specified at the inlet, and vice versa. Specifying the velocity vector at both the inlet and the outlet may cause convergence difficulties.

BOUNDARY CONDITION

The available **Boundary condition** options for an inlet are **Velocity** and **Pressure**. After selecting a **Boundary Condition** from the list, a section with the same or a similar name displays underneath. For example, if **Velocity** is selected, a **Velocity** section, where further settings are defined, is displayed.

VELOCITY

The **Normal inflow velocity** is specified as $\mathbf{u} = -\mathbf{n}U_0$, where $\mathbf{n}$ is the boundary normal pointing out of the domain and U_0 is the normal inflow speed.

The **Velocity field** option sets the velocity vector to $\mathbf{u} = \mathbf{u}_0$. The components of the inlet velocity vector $\mathbf{u}_0$ should be defined for this choice.

PRESSURE CONDITIONS

This option specifies the normal stress, which in most cases is approximately equal to the pressure. If the reference pressure p_{ref}, defined at the physics interface level, is equal to 0, the value of the **Pressure** p_0, at the boundary, is the absolute pressure. Otherwise, p_0 is the relative pressure at the boundary.

- The **Suppress backflow** option adjusts the inlet pressure locally in order to prevent fluid from exiting the domain through the boundary. If you clear the suppress backflow option, the inlet boundary can become an outlet depending on the pressure field in the rest of the domain.
- **Flow direction** controls in which direction the fluid enters the domain.
  - For **Normal flow**, it prescribes zero tangential velocity component.
  - For **User defined**, an **Inflow velocity direction** $\mathbf{d_u}$ (dimensionless) should be specified. The magnitude of $\mathbf{d_u}$ does not matter, only the direction. $\mathbf{d_u}$ must point into the domain.

CONSTRAINT SETTINGS

This section is displayed by clicking the **Show** button ( ) and selecting **Advanced Physics Options**.

	• Prescribing Inlet and Outlet Conditions • Normal Stress Boundary Condition

Outlet

This condition should be used on boundaries for which there is a net outflow from the domain. To obtain a numerically well-posed problem, it is advisable to also consider the Inlet conditions when specifying an Outlet condition. For example, if the velocity is specified at the inlet, the pressure may be specified at the outlet, and vice versa. Specifying the velocity vector at both the inlet and the outlet may cause convergence difficulties. Selecting appropriate outlet conditions for the Navier-Stokes equations is a nontrivial task. Generally, if there is something interesting happening at an outflow boundary, the computational domain should be extended to include this phenomenon.

BOUNDARY CONDITION

The available **Boundary condition** options for an outlet are **Pressure** and **Velocity**.

PRESSURE CONDITIONS

This option specifies the normal stress, which in most cases is approximately equal to the pressure. The tangential stress component is set to zero. If the reference pressure p_{ref}, defined at the physics interface level, is equal to 0, the value of the **Pressure** p_0, at the boundary, is the absolute pressure. Otherwise, p_0 is the relative pressure at the boundary.

- The **Normal flow** option changes the no tangential stress condition to a no tangential velocity condition. This forces the flow to exit (or enter) the domain perpendicularly to the outlet boundary.
- The **Suppress backflow** check box is selected by default. This option adjusts the outlet pressure in order to prevent fluid from entering the domain through the boundary.

VELOCITY

See the **Inlet** node Velocity section for the settings.

CONSTRAINT SETTINGS

This section is displayed by clicking the **Show** button ( ) and selecting **Advanced Physics Options**.

	Prescribing Inlet and Outlet Conditions

Symmetry

The **Symmetry** boundary condition prescribes no penetration and vanishing shear stresses. The boundary condition is a combination of a Dirichlet condition and a Neumann condition:

$$\mathbf{u}\cdot\mathbf{n} = \mathbf{0}, \qquad \left(-p\mathbf{I}+\left(\mu(\nabla\mathbf{u}+(\nabla\mathbf{u})^T)-\frac{2}{3}\mu(\nabla\cdot\mathbf{u})\mathbf{I}\right)\right)\mathbf{n} = \mathbf{0}$$

$$\mathbf{u}\cdot\mathbf{n} = \mathbf{0}, \qquad (-p\mathbf{I}+\mu(\nabla\mathbf{u}+(\nabla\mathbf{u})^{\mathrm{T}}))\mathbf{n} = \mathbf{0}$$

for the compressible and incompressible formulations. The Dirichlet condition takes precedence over the Neumann condition, and the above equations are equivalent to the following equation for both the compressible and incompressible formulations:

$$\mathbf{u}\cdot\mathbf{n} = \mathbf{0}, \qquad \mathbf{K}-(\mathbf{K}\cdot\mathbf{n})\mathbf{n} = \mathbf{0}$$
$$\mathbf{K} = \mu(\nabla\mathbf{u}+(\nabla\mathbf{u})^{\mathrm{T}})\mathbf{n}$$

BOUNDARY SELECTION

For 2D axial symmetry, a boundary condition does not need to be defined for the symmetry axis at $r = 0$. The software automatically provides a condition that prescribes $u_r = 0$ and vanishing stresses in the z direction and adds an **Axial Symmetry** node that implements these conditions on the axial symmetry boundaries only.

CONSTRAINT SETTINGS

This section is displayed by clicking the **Show** button ( ) and selecting **Advanced Physics Options**.

Open Boundary

The **Open Boundary** condition describes boundaries in contact with a large volume of fluid. Fluid can both enter and leave the domain on boundaries with this type of condition.

BOUNDARY CONDITIONS

The **Boundary condition** options for open boundaries are **Normal stress** and **No viscous stress**.

Normal Stress

The **Normal stress** f_0 condition implicitly imposes $p \approx f_0$.

No Viscous Stress

The **No Viscous Stress** condition specifies vanishing viscous stress on the boundary. This condition does not provide sufficient information to fully specify the flow at the open boundary and must at least be combined with pressure constraints at adjacent points.

The **No viscous stress** condition prescribes:

$$\left(\mu(\nabla\mathbf{u}+(\nabla\mathbf{u})^T)-\frac{2}{3}\mu(\nabla\cdot\mathbf{u})\mathbf{I}\right)\mathbf{n} = \mathbf{0}$$

$$\mu(\nabla \mathbf{u} + (\nabla \mathbf{u})^T)\mathbf{n} = \mathbf{0}$$

for the compressible and the incompressible formulations. This condition can be useful in some situations because it does not impose any constraint on the pressure. A typical example is a model with volume forces that give rise to pressure gradients that are hard to prescribe in advance. To make the model numerically stable, this boundary condition should be combined with a point constraint on the pressure.

Boundary Stress

The **Boundary Stress** node adds a boundary condition that represents a general class of conditions also known as traction boundary conditions.

BOUNDARY CONDITION

The **Boundary condition** options for the boundary stress are **General stress**, **Normal stress**, and **Normal stress, normal flow**.

General Stress

When **General stress** is selected, the components for the **Stress F** should be specified. The total stress on the boundary is set equal to the given stress $\mathbf{F}$:

$$\left(-p\mathbf{I} + \left(\mu(\nabla \mathbf{u} + (\nabla \mathbf{u})^T) - \frac{2}{3}\mu(\nabla \cdot \mathbf{u})\mathbf{I}\right)\right)\mathbf{n} = \mathbf{F}$$

$$(-p\mathbf{I} + \mu(\nabla \mathbf{u} + (\nabla \mathbf{u})^T))\mathbf{n} = \mathbf{F}$$

for the compressible and the incompressible formulations.

This boundary condition implicitly sets a constraint on the pressure that for 2D flows is

$$p = 2\mu\frac{\partial u_n}{\partial n} - \mathbf{n} \cdot \mathbf{F} \tag{13-23}$$

If $\partial u_n/\partial n$ is small, Equation 13-23 states that $p \approx -\mathbf{n}\cdot\mathbf{F}$.

Normal Stress

Normal Stress is described for the Open Boundary node.

Normal Stress, Normal Flow

For **Normal stress, normal flow**, the magnitude of the **Normal stress** f_0 should be specified. The tangential velocity is set to zero on the boundary:

$$\mathbf{n}^T\left(-p\mathbf{I} + \left(\mu(\nabla \mathbf{u} + (\nabla \mathbf{u})^T) - \frac{2}{3}\mu(\nabla \cdot \mathbf{u})\mathbf{I}\right)\right)\mathbf{n} = -\mathrm{f}_0, \qquad \mathbf{t} \cdot \mathbf{u} = 0$$

$$\mathbf{n}^T(-p\mathbf{I} + \mu(\nabla \mathbf{u} + (\nabla \mathbf{u})^T))\mathbf{n} = -\mathrm{f}_0, \qquad \mathbf{t} \cdot \mathbf{u} = 0$$

for the compressible and the incompressible formulations.

This boundary condition implicitly sets a constraint on the pressure that for 2D flows is

$$p = 2\mu\frac{\partial u_n}{\partial n} + \mathrm{f}_0 \tag{13-24}$$

If $\partial u_n/\partial n$ is small, Equation 13-24 states that $p \approx \mathrm{f}_0$.

CONSTRAINT SETTINGS

This section is displayed by clicking the **Show** button ( ) and selecting **Advanced Physics Options**.

If Normal Stress, Normal Flow is selected as the **Boundary condition**, then to **Apply reaction terms on** all dependent variables, the **All physics (symmetric)** option should be selected. Alternatively, the **Individual dependent variables** could be selected to restrict the reaction terms as needed.

Periodic Flow Condition

The **Periodic Flow Condition** splits its selection into a source group and a destination group. Fluid that leaves the domain through one of the destination boundaries enters the domain through the corresponding source boundary. This corresponds to a situation where the geometry is a periodic part of a larger geometry. If the boundaries are not parallel to each other, the velocity vector is automatically transformed.

If the boundaries are curved, the orientation of the source must be specified manually (see Orientation of Source).

No input is required when **Compressible flow (Ma<0.3)** is selected for **Compressibility** under the **Physical Model** section for the physics interface. Typically when a periodic boundary condition is used with a compressible flow, the pressure is the same at both boundaries and the flow is driven by a volume force.

PRESSURE DIFFERENCE

This section is available when **Incompressible flow** is selected for **Compressibility** under the **Physical Model** section for the physics interface.

A value or expression should be specified for the **Pressure difference**, $p_{\mathrm{src}} - p_{\mathrm{dst}}$. This pressure difference can, for example, drive the fully developed flow in a channel.

To set up a periodic boundary condition, both boundaries must be selected in the **Periodic Flow Condition** node. COMSOL Multiphysics automatically assigns one boundary as the source and the other as the destination. To manually set the destination selection, a **Destination Selection** subnode is available from the context menu (by right-clicking the parent node) or from the **Physics** toolbar, **Attributes** menu. All destination sides must be connected.

CONSTRAINT SETTINGS

This section is displayed by clicking the **Show** button ( ) and selecting **Advanced Physics Options**.

ORIENTATION OF SOURCE

For information about the **Orientation of Source** section, see Orientation of Source and Destination in the *COMSOL Multiphysics Reference Manual*.

Flow Continuity

The **Flow Continuity** condition is suitable for pairs where the boundaries match; it prescribes that the flow field is continuous across the pair.

A Wall subnode is added by default and it applies to the parts of the pair boundaries where a source boundary lacks a corresponding destination boundary and vice versa. The **Wall** feature can be overridden by any other boundary condition that applies to exterior boundaries. By right-clicking the **Flow Continuity** node, additional Fallback feature subnodes can be added.

The **Wall** fallback condition is incompatible with the **Low Re** wall treatment for the k-ω, SST, and Low Reynolds number k-ε turbulence models.

Pressure Point Constraint

The **Pressure Point Constraint** condition can be used to specify the pressure level. If it is not possible to specify the pressure level using a boundary condition, the pressure level must be set in some other way, for example, by specifying a fixed pressure at a point.

PRESSURE CONSTRAINT

The relative pressure value is set by specifying the **Pressure** p_0. Or, if the reference pressure p_{ref} defined at the physics interface level is equal to zero, p_0 represents the absolute pressure.

CONSTRAINT SETTINGS

This section is displayed by clicking the **Show** button ( ) and selecting **Advanced Physics Options**.

The **Apply reaction terms on** setting is set per default to **Individual dependent variables**. **All physics (symmetric)** cannot be used together with a segregated solver when fluid flow is coupled with Moving Mesh, Level Set, or Phase Field.

Point Mass Source

This feature requires at least one of the following licenses: Batteries & Fuel Cells Module, CFD Module, Chemical Reaction Engineering Module, Corrosion Module, Electrochemistry Module, Electrodeposition Module, Microfluidics Module, Pipe Flow Module, or Subsurface Flow Module.

The **Point Mass Source** feature models mass flow originating from an infinitely small domain centered around a point

For the Reacting Flow in Porous Media, Diluted Species interface, which is available with the CFD Module, Chemical Reaction Engineering Module, or Batteries & Fuel Cells Module, there are two nodes: one for the fluid flow (**Fluid Point Source**) and one for the species (**Species Point Source**).

SOURCE STRENGTH

The source **Mass flux**, $\dot{q}_{\text{p}}$ should be specified. A positive value results in mass being ejected from the point into the computational domain. A negative value results in mass being removed from the computational domain.

Point sources located on a boundary or on an edge affect the adjacent computational domains. This has the effect, for example, that a point source located on a symmetry plane has twice the given strength.

	Mass Sources for Fluid Flow

Line Mass Source

This feature requires at least one of the following licenses: Batteries & Fuel Cells Module, CFD Module, Chemical Reaction Engineering Module, Corrosion Module, Electrochemistry Module, Electrodeposition Module, Microfluidics Module, Pipe Flow Module, or Subsurface Flow Module.

The **Line Mass Source** feature models mass flow originating from a tube region with infinitely small radius.

For the Reacting Flow in Porous Media, Diluted Species interface, which is available with the CFD Module, Chemical Reaction Engineering Module, or Batteries & Fuel Cells Module, there are two nodes, one for the fluid flow (**Fluid Line Source**) and one for the species (**Species Line Source**).

SELECTION

The **Line Mass Source** feature is available for all dimensions, but the applicable selection differs between the dimensions.

MODEL DIMENSION	APPLICABLE GEOMETRICAL ENTITY
2D	Points
2D Axisymmetry	Points not on the axis of symmetry
3D	Edges

SOURCE STRENGTH

The source **Mass flux**, $\dot{q}_l$, should be specified. A positive value results in mass being ejected from the line into the computational domain and a negative value means that mass is removed from the computational domain.

Line sources located on a boundary affect the adjacent computational domains. This, for example, has the effect that a line source located on a symmetry plane has twice the given strength.

	Mass Sources for Fluid Flow

Gravity

This feature requires at least one of the following licenses: CFD Module, Heat Transfer Module.

The **Gravity** global feature is automatically added when **Include gravity** is selected at the interface level in the **Physical Model** settings. It defines the gravity forces from the **Acceleration of gravity** value. When a turbulence model that solves for the turbulent kinetic energy, k, is used, the option **Include buoyancy-induced turbulence** is available. When selected, the **Buoyancy contribution** is by default set to **Automatic from multiphysics**. Contributions are only obtained from multiphysics couplings that support buoyancy-induced turbulence, such as Nonisothermal Flow. If the **Buoyancy contribution** is switched to **User defined**, an edit field for the **Turbulent Schmidt number** appears. See also Theory for Buoyancy-Induced Turbulence in the *CFD Module User's Guide*.

ACCELERATION OF GRAVITY

The **Acceleration of gravity** (SI unit m/s, default value $-g_{const}\mathbf{e_z}$ in 2D axial symmetry and 3D and $-g_{const}\mathbf{e_y}$ in 2D) is used to define the gravity forces. It should be a global quantity.

14

The Heat Transfer Interfaces

This chapter describes the different types of heat transfer interfaces (Heat Transfer in Solids, Heat Transfer in Fluids, and Heat Transfer in Solids and Fluids), the Conjugate Heat Transfer, Laminar Flow interface, and the Joule Heating interface, all found under the **Heat Transfer** branch ( ) when adding a physics interface. It also contains information about heat transfer variables, suitable solver settings, and a brief theory background.

Theory for Heat Transfer

Theory for Heat Transfer in Solids

The Heat Transfer in Solids Interface solves for the following equation:

$$\rho C_p\left(\frac{\partial T}{\partial t} + \mathbf{u}_{\text{trans}} \cdot \nabla T\right) + \nabla \cdot (\mathbf{q} + \mathbf{q}_{\text{r}}) = -\alpha T : \frac{dS}{dt} + Q \tag{14-1}$$

The different quantities involved here are recalled below:

- ρ is the density (SI unit: kg/m^3)
- C_p is the specific heat capacity at constant stress (SI unit: J/(kg·K))
- T is the absolute temperature (SI unit: K)
- $\mathbf{u}_{\text{trans}}$ is the velocity vector of translational motion (SI unit: m/s)
- $\mathbf{q}$ is the heat flux by conduction (SI unit: W/m^2)
- $\mathbf{q}_{\text{r}}$ is the heat flux by radiation (SI unit: W/m^2)
- α is the coefficient of thermal expansion (SI unit: 1/K)
- S is the second Piola-Kirchhoff stress tensor (SI unit: Pa)
- Q contains additional heat sources (SI unit: W/m^3)

For a steady-state problem the temperature does not change with time and the terms with time derivatives disappear.

The first term on the right-hand side of Equation 14-1 is the *thermoelastic damping* and accounts for thermoelastic effects in solids:

$$Q_{\text{ted}} = -\alpha T : \frac{dS}{dt} \tag{14-2}$$

It should be noted that the d/dt operator is the material derivative.

Theory for Heat Transfer in Fluids

The Heat Transfer in Fluids Interface solves for the following equation (11.2-5 in Ref. 5):

$$\rho C_p\left(\frac{\partial T}{\partial t} + \mathbf{u} \cdot \nabla T\right) + \nabla \cdot (\mathbf{q} + \mathbf{q}_{\text{r}}) = \alpha_p T\left(\frac{\partial p}{\partial t} + \mathbf{u} \cdot \nabla p\right) + \tau : \nabla \mathbf{u} + Q \tag{14-3}$$

considering that:

- the Cauchy stress tensor, σ, is split into static and deviatoric parts as in:

$$\sigma = -p\mathbf{I} + \tau$$

- the dependent variables are the temperature, T, and pressure, p.

The different quantities involved here are recalled below:

- ρ is the density (SI unit: kg/m^3)
- C_p is the specific heat capacity at constant pressure (SI unit: J/(kg·K))
- T is the absolute temperature (SI unit: K)
- $\mathbf{u}$ is the velocity vector (SI unit: m/s)

- $\mathbf{q}$ is the heat flux by conduction (SI unit: W/m^2)
- $\mathbf{q}_r$ is the heat flux by radiation (SI unit: W/m^2)
- α_p is the coefficient of thermal expansion (SI unit: $1/K$):

$$\alpha_p = -\frac{1}{\rho}\frac{\partial \rho}{\partial T}$$

  for ideal gases, the thermal expansion coefficient takes the simpler form $\alpha_p = 1/T$
- p is the pressure (SI unit: Pa)
- τ is the viscous stress tensor (SI unit: Pa)
- Q contains heat sources other than viscous dissipation (SI unit: W/m^3)

For a steady-state problem the temperature does not change with time and the terms with time derivatives disappear.

The first term of the right-hand side of Equation 14-3 is the *work done by pressure changes* and is the result of heating under adiabatic compression as well as some thermoacoustic effects. It is generally small for low Mach number flows.

$$Q_p = \alpha_p T\left(\frac{\partial p}{\partial t} + \mathbf{u} \cdot \nabla p\right) \tag{14-4}$$

The second term represents viscous dissipation in the fluid:

$$Q_{\mathrm{vd}} = \tau : \nabla \mathbf{u} \tag{14-5}$$

About the Heat Transfer Interfaces

COMSOL Multiphysics includes the following interfaces for heat transfer:

- Heat Transfer in Solids
- Heat Transfer in Fluids
- Heat Transfer in Solids and Fluids
- Conjugate Heat Transfer, Laminar Flow (multiphysics interface)
- Joule Heating (multiphysics interface)

They are used to compute the temperature field.

The Conjugate Heat Transfer, Laminar Flow interface also computes the pressure and velocity fields.

In addition, the Joule Heating interface computes an electric potential field.

The main dependent variable is the temperature, T.

The heat transfer interfaces and the multiphysics couplings can be used for modeling heat transfer by conduction and convection as well as conjugate heat transfer and electromagnetic heating.

Space Dimensions

The physics interfaces are available in 1D, 2D, and 3D and for axisymmetric components with cylindrical coordinates in 1D and 2D.

All the interfaces apply in domains, with features available at each geometric level (volumes, surfaces, edges, and points).

Study Types

Stationary and time-dependent studies are available with the Heat Transfer interfaces.

You can consider a heat transfer problem as stationary if the temperature field is independent of time at each point. The system is said to be at thermal equilibrium. It happens when the conditions are independent of time or vary on a time scale large enough so that they can be approximated as constant. This type of study can be used as an initial step for a time-dependent analysis.

For other cases, use a time-dependent study instead.

Study and Study Step Types

Versions of the Heat Transfer Physics Interface

The versions of the main physics interface (ht) for heat transfer are:

- The Heat Transfer in Solids Interface
- The Heat Transfer in Fluids Interface
- The Heat Transfer in Solids and Fluids Interface

After selecting a version, default nodes are added under the main node, which then defines which version of the Heat Transfer interface is added. Depending on the version of the physics interface selected, the default nodes vary. For example:

- If **Heat Transfer in Solids** ( ) is selected, a **Heat Transfer in Solids (ht)** interface is added with a default **Solid** model.
- If **Heat Transfer in Fluids** ( ) is selected, a **Heat Transfer in Fluids (ht)** interface is added with a default **Fluid** model.
- If **Heat Transfer in Solids and Fluids** ( ) is selected, a **Heat Transfer in Solids and Fluids (ht)** interface is added with the default **Solid** and **Fluid** models.

Settings for the Heat Transfer Interface

The **Label** is the default physics interface name.

The **Name** is used primarily as a scope prefix for variables defined by the physics interface. Refer to such physics interface variables in expressions using the pattern `<name>.<variable_name>`. In order to distinguish between variables belonging to different physics interfaces, the `name` string must be unique. Only letters, numbers, and underscores (_) are permitted in the **Name** field. The first character must be a letter.

The default **Name** (for the first physics interface in the model) is `ht`.

PHYSICAL MODEL

In 2D and 1D axisymmetric components, set the **Thickness** d_z, which is the thickness of the domain in the out-of-plane direction. The default value is 1 m.

In 1D components, set the **Cross-sectional area** A_c and the **Cross sectional perimeter** P_c of the domain. Default values are 1 m^2 and 1 m, respectively.

CONSISTENT STABILIZATION

The **Streamline diffusion** check box is selected by default and should remain selected for optimal performance for heat transfer in fluids or other applications that include a convective or translational term. **Crosswind diffusion** provides extra diffusion in regions with sharp gradients. The added diffusion is orthogonal to the streamlines, so streamline diffusion and crosswind diffusion can be used simultaneously. The **Crosswind diffusion** check box is also selected by default.

INCONSISTENT STABILIZATION

The **Isotropic diffusion** check box is not selected by default.

	Heat Transfer Consistent and Inconsistent Stabilization Methods

ADVANCED SETTINGS

Add both a **Heat Transfer (ht)** and a **Moving Mesh (ale)** interface (found under the **Mathematics>Deformed Mesh** branch when adding a physics interface) then click the **Show More Options** button ( ) and select **Advanced Physics Options** in the **Show More Options** dialog box to display this section.

When the component contains a moving mesh, the **Enable conversions between material and spatial frame** check box is selected by default. This option has no effect when the component does not contain a moving frame because the material and spatial frames are identical in such cases. With a moving mesh, and when this option is active, the heat transfer features automatically account for deformation effects on heat transfer properties. In particular the effects of volume changes on the density are considered. Rotation effects on the thermal conductivity of an anisotropic

material and, more generally, deformation effects on an arbitrary thermal conductivity, are also covered. When the **Enable conversions between material and spatial frame** check box is not selected, the feature inputs (for example, Heat Source, Heat Flux, Boundary Heat Source, and Line Heat Source are not converted and are instead defined in the **Spatial** frame.

DISCRETIZATION

The shape functions used for the temperature are **Quadratic Lagrange** for the modeling of heat transfer in solids, **Linear** for the modeling of heat transfer in fluids. To display more than the shape functions in this section, click the **Show More Options** button ( ) and select **Advanced Physics Options** in the **Show More Options** dialog box. See the description of each version of the physics interface for more details.

DEPENDENT VARIABLES

The Heat Transfer interfaces have the dependent variable **Temperature** T. The dependent variable names can be changed. Editing the name of a scalar dependent variable changes both its field name and the dependent variable name. If a new field name coincides with the name of another field of the same type, the fields share degrees of freedom and dependent variable names. A new field name must not coincide with the name of a field of another type or with a component name belonging to some other field.

References for the Heat Transfer Interfaces

1. F.P. Incropera, D.P. DeWitt, T.L. Bergman, and A.S. Lavine, *Fundamentals of Heat and Mass Transfer*, 6th ed., John Wiley & Sons, 2006.

2. A. Bejan, *Heat Transfer*, John Wiley & Sons, 1993.

3. R.B. Bird, W.E. Stewart, and E.N. Lightfoot, *Transport Phenomena*, 2nd ed., John Wiley & Sons, 2007.

4. J. Zhang, A. Gupta, and J. Bakera, "Effect of Relative Humidity on the Prediction of Natural Convection Heat Transfer Coefficients", *Heat Transfer Engineering*, vol. 28, no. 4, pp. 335–342, 2007.

5. P.T. Tsilingiris, "Thermophysical and Transport Properties of Humid Air at Temperature Range Between 0 and 100 °C", *Energy Conversion and Management*, vol. 29, no. 2008, pp. 1098–1110, 2007.

6. J.L. Monteith and M.H.Unsworth, *Principles of Environmental Physics,* Edward Arnold, London, 290 pp., 1990.

7. W. Wagner and H-J Kretzschmar, *International Steam Tables*, 2nd ed., Springer, 2008.

The Heat Transfer in Solids Interface

The **Heat Transfer in Solids** ( ) interface is used to model heat transfer in solids by conduction, convection, and radiation. A Solid model is active by default on all domains. All functionality for including other domain types, such as a fluid domain, is also available.

The temperature equation defined in solid domains corresponds to the differential form of the Fourier's law that may contain additional contributions like heat sources.

When this version of the physics interface is added, these default nodes are added to the **Model Builder**—**Solid**, **Thermal Insulation** (the default boundary condition), and **Initial Values**. Then, from the **Physics** toolbar, add other nodes that implement, for example, boundary conditions and sources. You can also right-click **Heat Transfer is Solids** to select physics features from the context menu.

DISCRETIZATION

By default, the shape functions used for the temperature are **Quadratic Lagrange**.

To display more than the shape functions in this section, click the **Show More Options** button ( ) and select **Advanced Physics Options** in the **Show More Options** dialog box. See Settings for the Heat Transfer Interface for a description of the other settings.

	See Table 2-4 for links to common sections and Table 2-5 to common feature nodes. You can also search for information: press F1 to open the **Help** window or Ctrl+F1 to open the **Documentation** window.

	• Feature Nodes for the Heat Transfer in Solids Interface • Theory for Heat Transfer in Solids

Feature Nodes for the Heat Transfer in Solids Interface

This section details the nodes available with The Heat Transfer in Solids Interface with default settings:

- Domain Nodes for the Heat Transfer in Solids Interface
- Boundary Nodes for the Heat Transfer in Solids Interface
- Edge Nodes for the Heat Transfer in Solids Interface
- Point Nodes for the Heat Transfer in Solids Interface

DOMAIN NODES FOR THE HEAT TRANSFER IN SOLIDS INTERFACE

The Heat Transfer in Solids Interface has the following domain nodes:

- Cross Section
- Thickness
- Heat Source
- Fluid
- Solid
- Initial Values
- Translational Motion

BOUNDARY NODES FOR THE HEAT TRANSFER IN SOLIDS INTERFACE

The Heat Transfer in Solids Interface has the following boundary nodes:

- Boundary Heat Source
- Continuity
- Heat Flux
- Line Heat Source on Axis
- Outflow
- Periodic Condition
- Surface-to-Ambient Radiation
- Symmetry
- Temperature
- Thermal Insulation
- Thin Layer

EDGE NODES FOR THE HEAT TRANSFER IN SOLIDS INTERFACE

The Heat Transfer in Solids Interface has the following edge node (3D components only): Line Heat Source

POINT NODES FOR THE HEAT TRANSFER IN SOLIDS INTERFACE

The Heat Transfer in Solids Interface has the following point nodes: Point Heat Source and Point Heat Source on Axis

The Heat Transfer in Fluids Interface

The **Heat Transfer in Fluids** ( ) interface is used to model heat transfer in fluids by conduction, convection, and radiation. A Fluid model is active by default on all domains. All functionality for including other domain types, such as a solid domain, is also available.

The temperature equation defined in fluid domains corresponds to the convection-diffusion equation that may contain additional contributions like heat sources.

When this version of the physics interface is added, these default nodes are added to the **Model Builder**—**Fluid**, **Thermal Insulation** (the default boundary condition), and **Initial Values**. Then, from the **Physics** toolbar, add other nodes that implement, for example, boundary conditions and sources. You can also right-click **Heat Transfer in Fluids** to select physics features from the context menu.

DISCRETIZATION

By default, the shape functions used for the temperature are **Linear**.

	To display more than the shape functions in this section, click the **Show More Options** button ( ) and select **Advanced Physics Options** in the **Show More Options** dialog box. The rest of the settings are the same as for The Heat Transfer in Solids Interface. See Settings for the Heat Transfer Interface for a description of the other settings.

	See Table 2-4 for links to common sections and Table 2-5 to common feature nodes. You can also search for information: press F1 to open the **Help** window or Ctrl+F1 to open the **Documentation** window.

	• Feature Nodes for the Heat Transfer in Fluids Interface • Theory for Heat Transfer in Fluids

Feature Nodes for the Heat Transfer in Fluids Interface

This section details the nodes available with The Heat Transfer in Fluids Interface with default settings:

- Domain Nodes for the Heat Transfer in Fluids Interface
- Boundary Nodes for the Heat Transfer in Fluids Interface
- Edge Nodes for the Heat Transfer in Fluids Interface
- Point Nodes for the Heat Transfer in Fluids Interface

DOMAIN NODES FOR THE HEAT TRANSFER IN FLUIDS INTERFACE

The Heat Transfer in Fluids Interface has the following domain nodes:

- Cross Section
- Thickness
- Heat Source
- Fluid
- Solid
- Initial Values

BOUNDARY NODES FOR THE HEAT TRANSFER IN FLUIDS INTERFACE

The Heat Transfer in Fluids Interface has the following boundary nodes:

- Boundary Heat Source
- Continuity
- Heat Flux
- Line Heat Source on Axis
- Outflow
- Periodic Condition
- Surface-to-Ambient Radiation
- Symmetry
- Temperature
- Thin Layer

EDGE NODES FOR THE HEAT TRANSFER IN FLUIDS INTERFACE

The Heat Transfer in Fluids Interface has the following edge node (3D components only): Line Heat Source

POINT NODES FOR THE HEAT TRANSFER IN FLUIDS INTERFACE

The Heat Transfer in Fluids Interface has the following point node: Point Heat Source and Point Heat Source on Axis

The Heat Transfer in Solids and Fluids Interface

The **Heat Transfer in Solids and Fluids** ( ) interface is automatically added when the predefined multiphysics interface **Laminar Flow** under the **Conjugate Heat Transfer** branch is added.

It is used to model heat transfer in solids and fluids by conduction and convection. A Solid model is active by default on all domains, and a Fluid model is also added but not active.

The settings are the same as for The Heat Transfer in Fluids Interface. This means that a first order discretization of the temperature is set by default.

The settings and the feature nodes are the same as for The Heat Transfer in Fluids Interface.

The Joule Heating Interface

The **Joule Heating** interface ( ) is used to model resistive heating and, depending on additional licensed products, dielectric heating in devices where inductive effects are negligible; that is, when the skin depth is much larger than the studied device. This multiphysics interface adds an Electric Currents interface and a Heat Transfer in Solids interface. The multiphysics couplings add the electromagnetic power dissipation as a heat source, and the electromagnetic material properties can depend on the temperature.

Depending on the licensed products, stationary modeling, time-domain modeling are supported in all space dimensions. In addition, combinations of frequency-domain modeling for the Electric Currents interface and stationary modeling for the Heat Transfer in Solids interface, called frequency-stationary and frequency-transient modeling, are supported.

When a predefined **Joule Heating** interface is added from the **Heat Transfer>Electromagnetic Heating** branch ( ) of the **Model Wizard** or **Add Physics** windows, **Electric Currents** and **Heat Transfer in Solids** interfaces are added to the Model Builder. In addition, The Multiphysics Branch is added, which automatically includes the multiphysics coupling feature **Electromagnetic Heating**.

On the Constituent Physics Interfaces

The Electric Currents interface computes electric field, current and potential distributions in conducting media under conditions where inductive effects are negligible; that is, when the skin depth is much larger than the studied device. Depending on the licensed products, time and frequency domain formulations that account for capacitive effects are also provided. The Electric Currents interface solves a current conservation equation based on Ohm's law using the scalar electric potential as the dependent variable.

The Heat Transfer in Solids interface provides features for modeling heat transfer by conduction, convection, and radiation. A Heat Transfer in Solids model is active by default on all domains. All functionality for including other domain types, such as a fluid domain, is also available. The temperature equation defined in solid domains corresponds to the differential form of the Fourier's law that may contain additional contributions like heat sources.

In previous versions of COMSOL Multiphysics, a specific physics interface called Joule Heating was added to the Model Builder. Now, a predefined multiphysics coupling approach is used, improving the flexibility and design options for your modeling. For specific details, see Multiphysics Modeling Workflow.

SETTINGS FOR PHYSICS INTERFACES AND COUPLING FEATURE

When physics interfaces are added using the predefined couplings, for example **Joule Heating**, specific settings are included with the physics interfaces and the coupling features.

However, if physics interfaces are added one at a time, followed by the coupling features, these modified settings are not automatically included.

For example, if single **Electric Currents** and **Heat Transfer in Solids** interfaces are added, the COMSOL Multiphysics software adds an empty **Multiphysics** node. When you right-click this node, you can choose **Electromagnetic Heating** from the available coupling features, but the modified settings are not included.

TABLE 14-1: MODIFIED SETTINGS FOR A JOULE HEATING INTERFACE

PHYSICS INTERFACE OR COUPLING FEATURE	MODIFIED SETTINGS (IF ANY)
Electric Currents	No changes.

TABLE 14-1: MODIFIED SETTINGS FOR A JOULE HEATING INTERFACE

PHYSICS INTERFACE OR COUPLING FEATURE	MODIFIED SETTINGS (IF ANY)
Heat Transfer in Solids	No changes.
Electromagnetic Heating	The **Domain Selection** is the same as that of the participating physics interfaces. The **Boundary Selection** is the same as the exterior and interior boundaries of the **Domain Selection** of the participating physics interfaces. The corresponding **Electric Currents** and **Heat Transfer in Solids** interfaces are preselected in the Coupled Interfaces section.

PHYSICS INTERFACE AND COUPLING FEATURE

Coupling Feature

The Electromagnetic Heating multiphysics coupling node is described in this section.

Physics Interface Features

Physics nodes are available from the **Physics** ribbon toolbar (Windows users), **Physics** context menu (macOS or Linux users), or right-click to access the context menu (all users).

	In general, to add a node, go to the **Physics** toolbar, no matter what operating system you are using.

- The available physics features for the heat transfer interfaces are listed in the sections Domain Features, Boundary Features, and Edge and Point Features.
- For information about the available physics features for the Electric Currents interface, see The Electric Currents Interface.

	If you have an add-on module, such as the Heat Transfer Module or AC/DC Module, there are additional specialized physics nodes available and described in the individual module documentation.

	Thermal Microactuator Simplified: Application Library path **COMSOL_Multiphysics/Multiphysics/thermal_actuator_simplified**

Electromagnetic Heating

The **Electromagnetic Heating** multiphysics coupling ( ) adds the source term Q_e (SI unit: W/m^3) to account for resistive heating in the heat equation:

$$\rho C_p \frac{\partial T}{\partial t} - \nabla \cdot (k \nabla T) = Q_e \tag{14-6}$$

The resistive heating (ohmic heating) due to the electric current is

$$Q_e = \mathbf{J} \cdot \mathbf{E}$$

where $\mathbf{J}$ is the current density (SI unit: A/m^2), and $\mathbf{E}$ is the electric field strength (SI unit: V/m).

In addition, it maps the electromagnetic surface losses as a heat source on the boundary (SI unit: W/m^2) in the heat transfer part of the model.

SETTINGS

The **Label** is the default multiphysics coupling name.

The **Name** is used primarily as a scope prefix for variables defined by the coupling node. Refer to such variables in expressions using the pattern `<name>.<variable_name>`. In order to distinguish between variables belonging to different coupling nodes or physics interfaces, the `name` string must be unique. Only letters, numbers, and underscores (_) are permitted in the **Name** field. The first character must be a letter.

The default **Name** (for the first multiphysics coupling in the model) is `emh1`.

DOMAIN SELECTION

When nodes are added from the context menu, you can select **Manual** (the default) from the **Selection** list to choose specific domains to define the electromagnetic heat source or select **All domains** as needed.

When **Electromagnetic Heating** is added as an effect of adding a **Joule Heating** or **Joule Heating and Thermal Expansion** interface, the selection is the same as for the participating interfaces.

Only domains that are active in the physics interfaces selected in the **Coupled Interfaces** section can be selected.

BOUNDARY SELECTION

When nodes are added from the context menu, you can select **Manual** (the default) from the **Selection** list to choose specific boundaries to define the electromagnetic boundary heat source or select **All boundaries** as needed.

When **Electromagnetic Heating** is added as an effect of adding a **Joule Heating** or **Joule Heating and Thermal Expansion** interface, the selection is the same as the exterior and interior boundaries of the **Domain Selection** of the participating physics interfaces.

Only boundaries that are active in the physics interfaces selected in the **Coupled Interfaces** section can be selected.

COUPLED INTERFACES

This section defines the physics involved in the multiphysics coupling. By default, the applicable physics interface is selected in the **Electromagnetic** list to apply the **Heat transfer** to its physics interface to establish the coupling.

The default values depend on how the coupling node is created.

- If it is added from the **Physics** ribbon (Windows users), **Physics** contextual toolbar (macOS and Linux users), or context menu (all users), then the first physics interface of each type in the component is selected as the default.
- If it is added automatically when a multiphysics interface is selected in the **Model Wizard** or **Add Physics** window, then the two participating physics interfaces are selected.

You can also select **None** from either list to uncouple the **Electromagnetic Heating** node from a physics interface. If the physics interface is removed from the **Model Builder** (for example, **Heat Transfer in Solids** is deleted), then the **Heat transfer** list defaults to **None** as there is nothing to couple to.

Click the **Go to Source** button ( ) to move to the main physics interface node for the selected physics interface.

	If a physics interface is deleted and then added to the model again, then in order to re-establish the coupling, you need to choose the physics interface again from the **Heat transfer** or **Electromagnetic** lists. This is applicable to all multiphysics coupling nodes that would normally default to the once present physics interface. See Multiphysics Modeling Workflow.

The Nonisothermal Flow and Conjugate Heat Transfer Interfaces

The Nonisothermal Flow and Conjugate Heat Transfer interfaces combine the heat equation with laminar flow in a **Fluid** domain. The coupling with turbulent flow in **Fluid**, **Porous Medium** and **Moist Air** domain models is available with add-on modules. The advantage of using the multiphysics interfaces is that predefined couplings are available in both directions. In particular, physics interfaces use the same definition of the density, which can therefore be a function of both pressure and temperature. Solving this coupled system of equations usually requires numerical stabilization accounting for the couplings, which the predefined multiphysics interfaces also set up.

When a multiphysics interface is added from the **Heat Transfer>Conjugate Heat Transfer** branch or the **Fluid Flow>Nonisothermal Flow** branch of the **Model Wizard** or **Add Physics** windows, the **Single-Phase Flow** interface (laminar flow) and a **Heat Transfer** interface are added to the Model Builder. In addition, the **Multiphysics** node is added, which includes the multiphysics coupling feature **Nonisothermal Flow**.

Settings for Physics Interfaces and Coupling Feature

When physics interfaces are added using the predefined couplings, specific settings are included with the physics interfaces and the coupling features.

TABLE 14-2: MODIFIED SETTINGS FOR THE NONISOTHERMAL FLOW AND CONJUGATE HEAT TRANSFER INTERFACES

PHYSICS OR COUPLING INTERFACE	MODIFIED SETTINGS (IF ANY)
Heat Transfer in Solids	Discretization order from temperature Lagrange shape function is 1. A **Fluid** feature is added with a empty default editable selection. The **Absolute pressure**, p_A (**Model Input** section) and the **Velocity field**, $\mathbf{u}$ (**Heat Convection** section) are automatically set to the variables from the **Nonisothermal Flow** multiphysics coupling feature.
Heat Transfer in Fluids	In the **Fluid** default feature, the **Absolute pressure**, p_A (**Model Input** section) and the **Velocity field**, $\mathbf{u}$ (**Heat Convection** section) are automatically set to the variables from the **Nonisothermal Flow** multiphysics coupling feature.
Laminar Flow	In the **Fluid Properties** default feature, the **Density**, ρ is automatically set to the variable from the **Nonisothermal Flow** multiphysics coupling feature. The **Compressibility** option is set to **Weakly Compressible**. The **Use pseudo time stepping for stationary equation form** check box is automatically selected under the **Advanced Settings** section.
Nonisothermal Flow	The **Fluid flow** and **Heat transfer** interfaces are preselected.

Note that these settings may be overridden if another predefined coupling is added.

Nonisothermal Flow

Use the **Nonisothermal Flow** multiphysics coupling ( ) to simulate fluid flows where the fluid properties depend on temperature. Models can also include heat transfer in solids. The physics interface supports low Mach numbers (typically less than 0.3).

The Nonisothermal Flow, Laminar Flow and Conjugate Heat Transfer, Laminar Flow interfaces solve for conservation of energy, mass, and momentum in fluids and for conservation of energy in solids.

This multiphysics coupling defines p and $\mathbf{u}$ variables in order to set the **Absolute pressure** in the **Model Input** section and the **Velocity field** in the **Heat Convection** section of the **Fluid** feature in the Heat Transfer interface. In addition, it provides all the fluids quantities that may be needed by the Heat Transfer interface (for example, viscosity).

In the Fluid Flow interface, it sets the **Temperature** in the **Model Input** section and defines the **Density** in the **Fluid Properties** section of the **Fluid Properties** feature.

It also synchronizes the definition of the reference temperature to be used for incompressible flows. In addition, it also accounts for the multiphysics stabilization terms.

	The **Nonisothermal Flow** coupling node triggers pseudo time stepping when **Use pseudo time stepping for stationary equation form** in the **Fluid Flow** interface is set to **Automatic from physics**.

	The multiphysics stabilizations (streamline diffusion and crosswind diffusion) are controlled by the Fluid Flow interface. For example, the multiphysics streamline diffusion can be disabled in a **Laminar Flow** physics node, in the **Stabilization** section. The stabilization selected in the Heat Transfer physics interface has no effect if the multiphysics coupling stabilization is active but remains active if not. However, the isotropic diffusion is not a multiphysics stabilization and is controlled by each physics interface. Finally, when one of the physics interfaces or the multiphysics coupling is not solved in a study step, then the stabilization of each solved physics is used instead of the coupled stabilization, and the solver suggestions are uncoupled.

SETTINGS

The **Label** is the default multiphysics coupling feature name.

The **Name** is used primarily as a scope prefix for variables defined by the coupling node. Refer to such variables in expressions using the pattern `<name>.<variable_name>`. In order to distinguish between variables belonging to different coupling nodes or physics interfaces, the `name` string must be unique. Only letters, numbers, and underscores (_) are permitted in the **Name** field. The first character must be a letter.

The default **Name** (for the first multiphysics coupling feature in the model) is `nitf1`.

DOMAIN SELECTION

When nodes are added from the context menu, you can select **Manual** (the default) from the **Selection** list to choose specific domains to define the nonisothermal flow, or select **All domains** as needed.

COUPLED INTERFACES

This section defines the physics involved in the multiphysics coupling. The **Fluid flow** and **Heat transfer** lists include all applicable physics interfaces.

The default values depend on how this coupling node is created.

- If it is added from the **Physics** ribbon (Windows users), **Physics** contextual toolbar (Mac and Linux users), or context menu (all users), then the first physics interface of each type in the component is selected as the default.
- If it is added automatically when a multiphysics interface is chosen in the **Model Wizard** or **Add Physics** window, then the two participating physics interfaces are selected.

You can also select **None** from either list to uncouple the node from a physics interface. If the physics interface is removed from the **Model Builder** — for example, **Heat Transfer in Fluids** is deleted — then the **Heat transfer** list defaults to **None** as there is nothing to couple to.

MATERIAL PROPERTIES

Select an option from the **Specify density** list: **From heat transfer interface** (the default), **From fluid flow interface**, **Custom, linearized density**, or **Custom**.

For **Custom, linearized density**, enter the **Reference density** ρ_{ref} (SI unit: kg/m^3) and the **Coefficient of thermal expansion** α_p(SI unit:1/K), or select **From material,** or select a variable in the list if available. When **Custom, linearized density** is selected, regardless how the properties are defined they should be constant. If material properties are not constant you should consider using any of the other options to define the density.

For **Custom**, enter a **Density** ρ (SI unit: kg/m^3), or select a density in the list if available.

The density definition in the **Nonisothermal Flow** node ensures that the same definition of the density is used on the fluid flow and heat transfer interfaces. When the fluid flow compressibility setting is set to **Incompressible** then the thermal conductivity and the heat capacity are evaluated at the **Reference temperature** defined in the fluid flow interface.

LOCATION IN USER INTERFACE

Context Menus

Multiphysics>Nonisothermal Flow

when any version of the **Single-Phase Flow** interface is added together with **Heat Transfer in Fluids** (or another version of the Heat Transfer Interface, with a **Fluid** feature active).

Physics Interface Features

Physics nodes are available from the **Physics** ribbon toolbar (Windows users), **Physics** context menu (Mac or Linux users), or right-click to access the context menu (all users).

	In general, to add a node, go to the **Physics** toolbar, no matter what operating system you are using.

HEAT TRANSFER IN FLUIDS

The available physics features for The Heat Transfer in Fluids Interface are listed in Feature Nodes for the Heat Transfer in Fluids Interface. Also see Fluid for details about that feature.

LAMINAR FLOW

The available physics features for The Laminar Flow Interface are listed in the section Domain, Boundary, Pair, and Point Nodes for Single-Phase Flow.

Domain Features

Cross Section

Use this node with 1D components to model domains with another cross-sectional area or another cross-sectional perimeter than the global one that is used in the Heat Transfer interface **Physical Model** section. In 1D geometries, the temperature is assumed to be constant in the radial direction, and the heat equation is modified to account for that.

CROSS SECTION

Enter values for the **Cross-sectional area** A_c and the **Cross-sectional perimeter** P_c to set the cross section of the domain in the plane perpendicular to the 1D geometry.

LOCATION IN USER INTERFACE

Context menus

Heat Transfer in Solids>Cross Section

Heat Transfer in Fluids>Cross Section

Heat Transfer in Solids and Fluids>Cross Section

Ribbon

Physics Tab with *interface* as **Heat Transfer in Solids**, **Heat Transfer in Fluids**, or **Heat Transfer in Solids and Fluids** selected:

Domains>interface>Cross Section

Thickness

Use this node with 2D components to model domains with another thickness than the overall thickness that is specified in the Heat Transfer interface **Physical Model** section. In 2D geometries, the temperature is assumed to be constant in the out-of-plane direction (z direction with default spatial coordinate names).

THICKNESS

Specify a value for the **Thickness** d_z of the domain in the out-of-plane direction. This value replaces the overall thickness in the domains that are selected in the **Domain Selection** section, and is used to multiply some terms into the heat equation.

LOCATION IN USER INTERFACE

Context menus

Heat Transfer in Solids>Thickness

Heat Transfer in Fluids>Thickness

Heat Transfer in Solilds and Fluids>Thickness

Ribbon

Physics Tab with *interface* as **Heat Transfer in Solids**, **Heat Transfer in Fluids**, or **Heat Transfer in Solids and Fluids** selected:

Domains>interface>Thickness

Heat Source

This node describes heat generation within the domain. You express heating and cooling with positive and negative values, respectively. Add one or more nodes as needed — all heat sources within a domain contribute to the total heat source.

The **Heat Source** node adds a source term Q to the right-hand side of the heat equation:

$$Q = Q_0$$

Specify Q_0 as the heat per unit volume, as a linear heat source, or as a heat rate.

HEAT SOURCE

Click the **General source** (the default), **Linear source**, or **Overall heat transfer rate** buttons.

- For **General source** enter a value for the distributed heat source Q_0 when the default option (**User defined**) is selected. See also Additional General Source Options to use predefined heat sources available from other interfaces.
- For **Linear source** enter a value for the **Production/absorption coefficient** q_s used in the predefined linear expression. The advantage of writing the source on this form is that it can be accounted for in the streamline diffusion stabilization. The stabilization applies when q_s is independent of the temperature, but some stability can be gained as long as q_s is only weakly dependent on the temperature.
- For **Overall heat transfer rate** enter a value for the heat rate P_0. In this case $Q_0 = P_0/V$, where V is the total volume of the selected domains.

Additional General Source Options

For the general heat source Q_0 there are predefined heat sources available (in addition to a **User defined** heat source) when simulating heat transfer together with electrical or electromagnetic interfaces. Such sources represent, for example, ohmic heating and induction heating. Depending on additional physics interfaces, the following are available:

- With the addition of an Electric Currents interface, the **Total power dissipation density (ec)** heat source is available from the **General source** list.
- With the addition of any version of the Electromagnetic Waves interface (which requires the RF Module), the **Total power dissipation density (emw)** and **Electromagnetic power loss density (emw)** heat sources are available from the **General source** list.
- With the addition of a Magnetic Fields interface (a 3D component requires the AC/DC Module), the **Electromagnetic heating (mf)** heat source is available from the **General source** list.
- With the addition of a Magnetic and Electric Fields interface (which requires the AC/DC Module), the **Electromagnetic heating (mef)** heat source is available from the **General source** list.

FRAME SELECTION

To display this section, add both a **Heat Transfer (ht)** and a **Moving Mesh (ale)** interface (found under the **Mathematics>Deformed Mesh** branch when adding a physics interface). Then click the **Show More Options** button ( ) and select **Advanced Physics Options** in the **Show More Options** dialog box.

When the model contains a moving mesh, the **Enable conversions between material and spatial frame** check box is selected by default in the Heat Transfer interface, which in turn enables further options. Use **Frame Selection** to select the frame where the input variables are defined. If **Spatial** is selected, the variables take their values from the

text fields. If **Material** (the default) is selected, a conversion from the material to the spatial frame is applied to the text field values.

	Stabilization Techniques

	For the definition of a localized heat source, see Line Heat Source, Point Heat Source and Point Heat Source on Axis. For the definition of a heat on a boundary, see Boundary Heat Source.

LOCATION IN USER INTERFACE

Context menus

Heat Transfer in Solids>Heat Source

Heat Transfer in Fluids>Heat Source

Heat Transfer in Solids and Fluids>Heat Source

Ribbon

Physics Tab with *interface* as **Heat Transfer in Solids**, **Heat Transfer in Fluids**, or **Heat Transfer in Solids and Fluids** selected:

Domains>interface>Heat Source

Fluid

This node uses the following version of the heat equation to model heat transfer in fluids:

$$\rho C_p \frac{\partial T}{\partial t} + \rho C_p \mathbf{u} \cdot \nabla T + \nabla \cdot \mathbf{q} = Q \qquad (14\text{-}7)$$
$$\mathbf{q} = -k \nabla T$$

with the following material properties, fields, and sources:

- ρ (SI unit: kg/m^3) is the fluid density.
- C_p (SI unit: J/(kg·K)) is the fluid heat capacity at constant pressure.
- k (SI unit: W/(m·K)) is the fluid thermal conductivity (a scalar or a tensor if the thermal conductivity is anisotropic).
- $\mathbf{u}$ (SI unit: m/s) is the fluid velocity field, either an analytic expression or a velocity field from a Fluid Flow interface.
- Q (SI unit: W/m^3) is the heat source (or sink). Add one or several heat sources as separate physics features. See the Heat Source node for an example.

For a steady-state problem the temperature does not change with time and the first term disappears.

MODEL INPUTS

This section has fields and values that are inputs to expressions that define material properties. If such user-defined property groups are added, the model inputs appear here. For all model inputs, you can select **Common model input** to use a model input defined under **Global Definitions**.

Temperature

This section is available when temperature-dependent material properties are used. By default the temperature of the parent interface is used and the section is not editable. To edit the **Temperature** field, click **Make All Model Inputs Editable** ( ). The available options are **User defined** (default), **Common model input**, and all temperature variables from the physics interfaces included in the model. These physics interfaces have their own tags (the **Name**). For example, if a **Heat Transfer in Fluids** interface is included in the model, the **Temperature (ht)** option is available.

Absolute Pressure

The absolute pressure is used in some predefined quantities that include the enthalpy (the energy flux, for example).

The default **Absolute pressure** p_A is taken from **Common model input**. It corresponds to the `minput.pA` variable, set to 1 atm by default. To edit it, click the **Go to Source** button ( ), and in the **Default Model Inputs** node under **Global Definitions**, set a value for the **Pressure** in the **Expression for remaining selection** section. When additional physics interfaces are added to the model, the absolute pressure variables defined by these physics interfaces can also be selected from the list. For example, if a **Laminar Flow** interface is added you can select **Absolute pressure (spf)** from the list. The last option is **User defined**.

Concentration

From the **Concentration** c (SI unit: mol/m^3 or kg/m^3) list, select an existing concentration variable from another physics interface, if any concentration variables exist, or select **User defined** to enter a value or expression for the concentration. This section can be edited anytime a material property is concentration dependent; for example, when the **Fluid type** is set to **Moist air** with **Input quantity** set to **Concentration**.

HEAT CONVECTION

The default **Velocity field** $\mathbf{u}$ is **User defined**. For **User defined** enter values or expressions for the components based on space dimensions. You can also select an existing velocity field in the component (for example, **Velocity field (spf)** from a **Laminar Flow** interface).

HEAT CONDUCTION, FLUID

The thermal conductivity k describes the relationship between the heat flux vector $\mathbf{q}$ and the temperature gradient ∇T in $\mathbf{q} = -k\nabla T$, which is Fourier's law of heat conduction. Enter this quantity as power per length and temperature.

The default **Thermal conductivity** k is taken **From material**. For **User defined** select **Isotropic**, **Diagonal**, **Symmetric**, or **Full** based on the characteristics of the thermal conductivity, and enter another value or expression. For **Isotropic** enter a scalar which will be used to define a diagonal tensor. For the other options, enter values or expressions into the editable fields of the tensor.

THERMODYNAMICS, FLUID

This section sets the thermodynamics properties of the fluid.

The heat capacity at constant pressure C_p describes the amount of heat energy required to produce a unit temperature change in a unit mass.

The ratio of specific heats γ is the ratio of the heat capacity at constant pressure, C_p, to the heat capacity at constant volume, C_v. When using the ideal gas law to describe a fluid, specifying γ is sufficient to evaluate C_p. For common diatomic gases such as air, $\gamma = 1.4$ is the standard value. Most liquids have $\gamma = 1.1$ while water has $\gamma = 1.0$. γ is used in the streamline stabilization and in the variables for heat fluxes and total energy fluxes. It is also used if the ideal gas law is applied.

The only **Fluid type** option is **Gas/Liquid**. This option specifies the **Density**, the **Heat capacity at constant pressure**, and the **Ratio of specific heats** for a general gas or liquid.

LOCATION IN USER INTERFACE

Context menus

Heat Transfer in Solids>Fluid

Heat Transfer in Fluids>Fluid

Heat Transfer in Solids and Fluids>Fluid

Ribbon

Physics Tab with *interface* as **Heat Transfer in Solids**, **Heat Transfer in Fluids**, or **Heat Transfer in Solids and Fluids** selected:

Domains>interface>Fluid

Solid

This node uses this version of the heat equation to model heat transfer in solids:

$$\rho C_p \frac{\partial T}{\partial t} + \rho C_p \mathbf{u} \cdot \nabla T + \nabla \cdot \mathbf{q} = Q \qquad (14\text{-}8)$$
$$\mathbf{q} = -k \nabla T$$

with the following material properties, fields, and sources:

- ρ (SI unit: kg/m^3) is the solid density.
- C_p (SI unit: J/(kg·K)) is the solid heat capacity at constant pressure.
- k (SI unit: W/(m·K)) is the solid thermal conductivity (a scalar or a tensor if the thermal conductivity is anisotropic).
- $\mathbf{u}$ (SI unit: m/s) is the velocity field defined by the Translational Motion subnode when parts of the model are moving in the material frame.
- Q (SI unit: W/m^3) is the heat source (or sink). Add one or several heat sources as separate physics features. See the Heat Source node.

For a steady-state problem the temperature does not change with time and the first term disappears.

HEAT CONDUCTION, SOLID

The thermal conductivity k describes the relationship between the heat flux vector $\mathbf{q}$ and the temperature gradient ∇T in $\mathbf{q} = -k\nabla T$, which is Fourier's law of heat conduction. Enter this quantity as power per length and temperature.

The default **Thermal conductivity** k is taken **From material**. For **User defined** select **Isotropic**, **Diagonal**, **Symmetric**, or **Full** based on the characteristics of the thermal conductivity, and enter another value or expression. For **Isotropic** enter a scalar which will be used to define a diagonal tensor. For the other options, enter values or expressions into the editable fields of the tensor.

The components of the thermal conductivity k when given on tensor form (k_{xx}, k_{yy}, and so on, representing an anisotropic thermal conductivity) are available as `ht.kxx`, `ht.kyy`, and so on (using the default name `ht`). The single scalar mean effective thermal conductivity `ht.kmean` is the mean value of the diagonal elements k_{xx}, k_{yy}, and k_{zz}. For an isotropic thermal conductivity, `ht.k_iso` contains its value.

⚠	Fourier's law assumes that the thermal conductivity tensor is symmetric. A nonsymmetric tensor can lead to unphysical results.

THERMODYNAMICS, SOLID

This section sets the thermodynamics properties of the solid.

The heat capacity at constant pressure describes the amount of heat energy required to produce a unit temperature change in a unit mass.

The **Density** ρ and **Heat capacity at constant pressure** C_p should be specified.

In addition, the thermal diffusivity α, defined as $k/(\rho C_p)$ (SI unit: m^2/s), is also a predefined quantity. The thermal diffusivity can be interpreted as a measure of thermal inertia (heat propagates slowly where the thermal diffusivity is low, for example). The components of the thermal diffusivity α, when given on tensor form (α_{xx}, α_{yy}, and so on, representing an anisotropic thermal diffusivity) are available as `ht.alphaTdxx`, `ht.alphaTdyy`, and so on (using the default physics name `ht`). The single scalar mean thermal diffusivity `ht.alphaTdMean` is the mean value of the diagonal elements α_{xx}, α_{yy}, and α_{zz}. The denominator ρC_p is the effective volumetric heat capacity which is also available as a predefined quantity, `ht.C_eff`.

Theory for Heat Transfer in Solids

LOCATION IN USER INTERFACE

Context menus

Heat Transfer in Solids>Solid

Heat Transfer in Fluids>Solid

Heat Transfer in Solids and Fluids>Solid

Ribbon

Physics Tab with *interface* as **Heat Transfer in Solids**, **Heat Transfer in Fluids**, or **Heat Transfer in Solids and Fluids** selected:

Domains>interface>Solid

Initial Values

This node adds an initial value for the temperature that can serve as an initial condition for a transient simulation or as an initial guess for a nonlinear solver. In addition to the default **Initial Values** node always present in the interface, you can add more **Initial Values** nodes if needed.

INITIAL VALUES

Enter a value or expression for the initial value of the **Temperature** T (SI unit: K). The default value is approximately room temperature, 293.15 K (20°C).

LOCATION IN USER INTERFACE

Context menus

Heat Transfer in Solids>Initial Values

Heat Transfer in Fluids>Initial Values

Heat Transfer in Solids and Fluids>Initial Values

Ribbon

Physics Tab with *interface* as **Heat Transfer in Solids**, **Heat Transfer in Fluids**, or **Heat Transfer in Solids and Fluids** selected:

Domains>interface>Initial Values

Translational Motion

This subnode provides movement by translation to the model for heat transfer in solids. It adds the following contribution to the right-hand side of Equation 14-8, defined in the parent node:

$$-\rho C_p \mathbf{u}_{\text{trans}} \cdot \nabla T$$

The contribution describes the effect of a moving coordinate system, which is required to model, for example, a moving heat source.

⚠	Special care must be taken on boundaries where $\mathbf{n} \cdot \mathbf{u}_{\text{trans}} \neq 0$. The Heat Flux boundary condition does not, for example, work on boundaries where $\mathbf{n} \cdot \mathbf{u}_{\text{trans}} < 0$.

DOMAIN SELECTION

By default, the selection is the same as for the **Solid** node that it is attached to, but it is possible to use more than one **Translational Motion** subnode, each covering a subset of the **Solid** node's selection.

TRANSLATIONAL MOTION

The x, y, and z (in 3D) components of the **Velocity field** $\mathbf{u}_{\text{trans}}$ should be specified in this section.

Boundary Features

Boundary Heat Source

This node models a heat source (or heat sink) that is embedded in the boundary. When selected as a **Pair Boundary Heat Source**, it also prescribes that the temperature field is continuous across the pair.

PAIR SELECTION

If this node is selected from the **Pairs** menu, select the pairs on which to apply this condition by clicking the **Add** button (+) and choose the pairs to add from the list in the **Add** dialog box that opens; then click **OK**. A pair has to be created first. See Identity and Contact Pairs in the *COMSOL Multiphysics Reference Manual* for more details.

BOUNDARY HEAT SOURCE

Click the **General source** (the default) or **Heat rate** button.

- For **General source** enter a value for the boundary heat source Q_b when the default option, **User defined**, is selected.

  A positive Q_b corresponds to heating and a negative Q_b corresponds to cooling. For the general boundary heat source Q_b, there are predefined heat sources available when simulating heat transfer together with electrical or electromagnetic interfaces. Such sources represent, for example, ohmic heating and induction heating.
- For **Heat rate** enter the heat rate P_b. In this case $Q_b = P_b/A$, where A is the total area of the selected boundaries.

FRAME SELECTION

The settings are the same as for the Heat Source node and are described under **Frame Selection**.

SOURCE POSITION

To display this section, click the **Show More Options** button ( ) and select **Advanced Physics Options** in the **Show More Options** dialog box.

Select a **Source position** to define a side where the heat source is defined — **Layer** (the default), **Upside**, or **Downside**. This setting has no effect unless the temperature differs from one side of the boundary to the other. Typically when **Boundary Heat Source** contributes with a **Thin Layer** feature.

	To define the boundary heat source Q_b as a function of the temperature, use the local temperature variable on the selected boundary, `ht.bhs1.Tvar`, that corresponds to the appropriate variable (upside, downside, or average temperature of a layer, wall temperature with turbulence modeling), depending on the model configurations.

	Upside and downside settings can be visualized by plotting the global normal vector (`nx`, `ny`, `nz`), that always points from downside to upside. Note that the normal vector (`ht.nx`, `ht.ny`, `ht.nz`) may be oriented differently. See Tangent and Normal Variables.

LOCATION IN USER INTERFACE

Context menus

Heat Transfer in Solids>Boundary Heat Source

Heat Transfer in Fluids>Boundary Heat Source
Heat Transfer in Solids and Fluids>Boundary Heat Source

Ribbon
Physics Tab with *interface* as **Heat Transfer in Solids**, **Heat Transfer in Fluids**, or **Heat Transfer in Solids and Fluids** selected:

Boundaries>interface>Boundary Heat Source
Pairs>interface>Pair Boundary Heat Source

Continuity

This node can be added to pairs. It prescribes that the temperature field is continuous across the pair. **Continuity** is only suitable for pairs where the boundaries match.

PAIR SELECTION

If this node is selected from the **Pairs** menu, select the pairs on which to apply this condition by clicking the **Add** button (+) and choose the pairs to add from the list in the **Add** dialog box that opens; then click **OK**. A pair has to be created first. See Identity and Contact Pairs for more details.

LOCATION IN USER INTERFACE

Context menus
Heat Transfer in Solids>Pairs>Continuity
Heat Transfer in Fluids>Pairs>Continuity
Heat Transfer in Solids and Fluids>Pairs>Continuity

Ribbon
Physics Tab with *interface* as **Heat Transfer in Solids**, **Heat Transfer in Fluids**, or **Heat Transfer in Solids and Fluids** selected:

Pairs>interface>Continuity

Heat Flux

Use this node to add heat flux across boundaries. A positive heat flux adds heat to the domain.

HEAT FLUX

Click to select the **General inward heat flux** (the default), **Convective heat flux**, or **Heat rate** button.

General Inward Heat Flux
It adds q_0 to the total flux across the selected boundaries. Enter a value for q_0 to represent a heat flux that enters the domain. For example, any electric heater is well represented by this condition, and its geometry can be omitted.

Convective Heat Flux
Enter a value for the **Heat transfer coefficient** h and an **External temperature**, T_{ext}. The value depends on the geometry and the ambient flow conditions. Convective heat flux is defined by $q_0 = h(T_{\text{ext}} - T)$.

Heat Rate
For **Heat rate** enter the heat rate P_0 across the boundaries where the **Heat Flux** node is active. In this case $q_0 = P_0/A$, where A is the total area of the selected boundaries.

FRAME SELECTION

The settings are the same as for the Heat Source node and are described under **Frame Selection**.

LOCATION IN USER INTERFACE

Context menus

Heat Transfer in Solids>Heat Flux

Heat Transfer in Fluids>Heat Flux

Heat Transfer in Solids and Fluids>Heat Flux

Ribbon

Physics Tab with *interface* as **Heat Transfer in Solids**, **Heat Transfer in Fluids**, or **Heat Transfer in Solids and Fluids** selected:

Boundaries>interface>Heat Flux

Line Heat Source on Axis

This node, available for 2D axisymmetric components, models a heat source (or sink) that is so thin that it has no thickness in the model geometry. The settings are the same as for the Line Heat Source node.

LOCATION IN USER INTERFACE

Context menus

Heat Transfer in Solids>Line Heat Source on Axis

Heat Transfer in Fluids>Line Heat Source on Axis

Heat Transfer in Solids and Fluids>Line Heat Source on Axis

Ribbon

Physics Tab with *interface* as **Heat Transfer in Solids**, **Heat Transfer in Fluids**, or **Heat Transfer in Solids and Fluids** selected:

Boundaries>interface>Line Heat Source on Axis

Outflow

This node provides a suitable boundary condition for convection-dominated heat transfer at outlet boundaries. In a model with convective heat transfer, this condition states that the only heat transfer occurring across the boundary is by convection. The temperature gradient in the normal direction is zero, and there is no radiation. This is usually a good approximation of the conditions at an outlet boundary in a heat transfer model with fluid flow.

BOUNDARY SELECTION

In most cases, the Outflow node does not require any user input. If required, select the boundaries that are convection-dominated outlet boundaries.

LOCATION IN USER INTERFACE

Context menus

Heat Transfer in Solids>Outflow

Heat Transfer in Fluids>Outflow

Heat Transfer in Solids and Fluids>Outflow

Ribbon

Physics Tab with *interface* as **Heat Transfer in Solids**, **Heat Transfer in Fluids**, or **Heat Transfer in Solids and Fluids** selected:

Boundaries>interface>Outflow

Periodic Condition

Use this node to add periodic temperature conditions to boundary pairs. The **Destination Selection** subnode is available from the context menu (right-click the parent node) or from the **Physics** toolbar, **Attributes** menu.

PERIODIC CONDITION

Enter a **Temperature offset** ΔT to the temperature periodicity. The default value is 0 K, so that the source and destination temperatures are equal.

CONSTRAINT SETTINGS

To display this section, click the **Show More Options** button ( ) and select **Advanced Physics Options** in the **Show More Options** dialog box. This section contains settings for specifying the type of constraint and whether to use a pointwise or weak constraint. See Constraint Settings for more information.

ORIENTATION OF SOURCE

To display this section, click the **Show More Options** button ( ) and select **Advanced Physics Options** in the **Show More Options** dialog box. For information about the **Orientation of Source** section, see Orientation of Source and Destination.

LOCATION IN USER INTERFACE

Context menus

Heat Transfer in Solids>Periodic Condition

Heat Transfer in Fluids>Periodic Condition

Heat Transfer in Solids and Fluids>Periodic Condition

Ribbon

Physics Tab with *interface* as **Heat Transfer in Solids**, **Heat Transfer in Fluids**, or **Heat Transfer in Solids and Fluids** selected:

Boundaries>interface>Periodic Condition

Surface-to-Ambient Radiation

Use this node to account for radiation from boundaries to the ambient. The net inward heat flux from surface-to-ambient radiation is

$$-\mathbf{n}\cdot\mathbf{q} = \varepsilon\sigma(T_{\mathrm{amb}}^4 - T^4)$$

where ε is the surface emissivity, σ is the Stefan-Boltzmann constant (a predefined physical constant), and T_{amb} is the ambient temperature.

MODEL INPUT

This section has fields and values that are inputs to expressions that define material properties. If such user-defined property groups are added, the model inputs appear here.

Temperature

This section is available when temperature-dependent material properties are used. By default, the temperature of the parent interface is used and the section is not editable. To edit the **Temperature** field, click **Make All Model Inputs Editable** ( ). The available options are **User defined** (default), **Common model input** (the `minput.T` variable, set to 293.15 K by default), and all temperature variables from the physics interfaces included in the model. To edit the `minput.T` variable, click the **Go to Source** button ( ), and in the **Default Model Inputs** node under **Global Definitions**, set a value for the **Temperature** in the **Expression for remaining selection** section.

RADIATION SETTINGS

Define on which side of the boundary is the ambient domain that receives the radiation, by selecting a **Radiation direction**: **Upside** or **Downside**. This setting has no effect unless the temperature differs from one side of the boundary to the other.

	Upside and downside settings can be visualized by plotting the global normal vector (`nx`, `ny`, `nz`), that always points from downside to upside. Note that the normal vector (`ht.nx`, `ht.ny`, `ht.nz`) may be oriented differently. See Tangent and Normal Variables in the *COMSOL Multiphysics Reference Manual*.

SURFACE-TO-AMBIENT RADIATION

Surface emissivity

The default **Surface emissivity** ε (a dimensionless number between 0 and 1) is taken **From material**. For **User defined**, it should be specified. An emissivity of 0 means that the surface emits no radiation at all while an emissivity of 1 means that it is a perfect blackbody.

Ambient temperature

For **User defined**, enter an **Ambient temperature** T_{amb}. The default value is approximately room temperature, 293.15 K (20°C). Else, select an **Ambient temperature** defined in an **Ambient Properties** node under **Definitions>Shared Properties**.

LOCATION IN USER INTERFACE

Context Menus

Heat Transfer in Solids>Surface-to-Ambient Radiation
Heat Transfer in Fluids>Surface-to-Ambient Radiation
Heat Transfer in Solids and Fluids>Surface-to-Ambient Radiation

Ribbon

Physics Tab with *interface* as **Heat Transfer in Solids**, **Heat Transfer in Fluids**, or **Heat Transfer in Solids and Fluids** selected:

Boundaries>Surface-to-Ambient Radiation

Symmetry

This node provides a boundary condition for symmetry boundaries. This boundary condition is similar to a Thermal Insulation condition, and it means that there is no heat flux across the boundary.

LOCATION IN USER INTERFACE

Context menus

Heat Transfer in Solids>Symmetry
Heat Transfer in Fluids>Symmetry
Heat Transfer in Solids and Fluids>Symmetry

Ribbon

Physics Tab with *interface* as **Heat Transfer in Solids**, **Heat Transfer in Fluids**, or **Heat Transfer in Solids and Fluids** selected:

Boundaries>interface>Symmetry

Temperature

Use this node to specify the temperature somewhere in the geometry, for example, on boundaries.

PAIR SELECTION

If this node is selected from the **Pairs** menu, select the pairs on which to apply this condition by clicking the **Add** button (+) and choose the pairs to add from the list in the **Add** dialog box that opens; then click **OK**.. A pair has to be created first. See Identity and Contact Pairs for more details.

TEMPERATURE

The equation for this condition is $T = T_0$, where T_0 is the prescribed temperature on the boundary. Enter the value or expression for the **Temperature** T_0.

CONSTRAINT SETTINGS

To display this section, click the **Show More Options** button ( ) and select **Advanced Physics Options** in the **Show More Options** dialog box. By default **Classic constraints** is selected. Select the **Use weak constraints** check box to replace the standard constraints with a weak implementation. Select the **Discontinuous Galerkin constraints** button when **Classic constraints** do not work satisfactorily.

	The **Discontinuous Galerkin constraints** option is especially useful to prevent oscillations on inlet boundaries where convection dominates. Unlike the **Classic constraints**, these constraints do not enforce the temperature on the boundary extremities. This is relevant on fluid inlets where the temperature condition should not be enforced on the walls at the inlet extremities. Note that discontinuous Galerkin constraints are not supported for resistive thin layers or with turbulent wall functions.

LOCATION IN USER INTERFACE

Context menus

Heat Transfer in Solids>Temperature
Heat Transfer in Fluids>Temperature
Heat Transfer in Solids and Fluids>Temperature

Ribbon

Physics Tab with *interface* as **Heat Transfer in Solids**, **Heat Transfer in Fluids**, or **Heat Transfer in Solids and Fluids** selected:

Boundaries>interface>Temperature
Pairs>interface>Temperature

Thermal Insulation

This node is the default boundary condition for all Heat Transfer interfaces. This boundary condition means that there is no heat flux across the boundary:

$$-\mathbf{n} \cdot \mathbf{q} = 0$$

and hence specifies where the domain is well insulated. Intuitively, this equation says that the temperature gradient across the boundary is zero. For this to be true, the temperature on one side of the boundary must equal the

temperature on the other side. Because there is no temperature difference across the boundary, heat cannot transfer across it.

LOCATION IN USER INTERFACE

Context menus

Heat Transfer in Solids>Thermal Insulation

Heat Transfer in Fluids>Thermal Insulation

Heat Transfer in Solids and Fluids>Thermal Insulation

Ribbon

Physics Tab with *interface* as **Heat Transfer in Solids**, **Heat Transfer in Fluids**, or **Heat Transfer in Solids and Fluids** selected:

Boundaries>interface>Thermal Insulation

Thin Layer

This node defines the thermal conductivity and thermodynamics properties of a resistive material located on internal or external boundaries. This material can be formed of one or more layers.

When the layer is a bad thermal conductor compared to the adjacent geometry, the tangential heat flux can be neglected and only the heat flux across the layer's thickness is considered. The layer can be constituted of multiple sublayers with specific thickness and thermal properties. This condition may also be used to enforce consistent initial conditions.

LAYER SELECTION

Select the applicable layers (the default setting is **All layered materials**) defining the required material properties for the node.

If no layered materials have been included yet, there is a shorthand available for creating a **Single Layer Material**, a **Layered Material Link**, or a **Layered Material Stack** (the plus, next to the **Layered Material** list).

When a layered material stack or link is selected from the **Layered Material** list, clear the check boxes corresponding to layers where the node should not be applied in the **Selection** table.

You can visualize the selected layered materials and layers in each layered material by clicking the **Layer Cross Section Preview** and **Layer 3D Preview** buttons.

	The desired selection for the node may correspond to boundaries with different layered materials. The **All layered materials** option allows to gather these materials to make the desired selection applicable for the node on the union of the boundaries where the layered materials are defined. See Layered Material, Layered Material Link, Layered Material Stack, Layered Material Link (Subnode), and Single-Layer Materials in the *COMSOL Multiphysics Reference Manual*.

MODEL INPUT

This section has fields and values that are inputs to expressions that define material properties. If such user-defined property groups are added, the model inputs appear here.

Volume reference temperature

This section is available when a temperature-dependent density defined in a material is used. On the material frame, the density is evaluated onto a reference temperature to ensure mass conservation in the presence of temperature

variations. By default the **Common model input** is used. This corresponds to the variable `minput.Tempref`, which is set by default to 293.15 K. To edit it, click the **Go to Source** button ( ), and in the **Default Model Inputs** node under **Global Definitions**, set a value for the **Volume reference temperature** in the **Expression for remaining selection** section.

The other options are **User defined** and all temperature variables from the physics interfaces included in the model.

⚠	This model input does not override the **Reference temperature** T_{ref} set in the **Physical Model** section of the physics interface, and that is used to evaluate the reference enthalpy, and a reference density for incompressible nonisothermal flows.

Temperature

This section is available when temperature-dependent material properties are used. By default the temperature of the parent interface is used and the section is not editable. To edit the **Temperature** field, click **Make All Model Inputs Editable** ( ). The available options are **User defined** (default), **Common model input** (the `minput.T` variable, set to 293.15 K by default), and all temperature variables from the physics interfaces included in the model. To edit the `minput.T` variable, click the **Go to Source** button ( ), and in the **Default Model Inputs** node under **Global Definitions**, set a value for the **Temperature** in the **Expression for remaining selection** section.

LAYER MODEL

The only option for **Layer type** is **Thermally thick approximation**.

From the **Specify** list select **Layer properties** (the default) or **Thermal resistance**, to set either the **Thermal conductivity** k or the **Thermal resistance** R_{s}.

HEAT CONDUCTION

The default **Thermal conductivity** k is taken **From layered material**. For **User defined** select **Isotropic**, **Diagonal**, **Symmetric**, or **Full** to enter another value or expression.

Alternatively, set a value for the **Thermal resistance** R_{s} if **Specify** is set to **Thermal resistance** in the **Layer Model** section.

THERMODYNAMICS

By default the **Density** ρ and **Heat capacity at constant pressure** C_p of the layer are taken **From layered material**. For **User defined** enter other values or expressions. These properties are only used in time-dependent studies, but must be set in all cases.

LOCATION IN USER INTERFACE

Context menus

Heat Transfer in Solids>Thin Layer
Heat Transfer in Fluids>Thin Layer
Heat Transfer in Solids and Fluids>Thin Layer

Ribbon

Physics Tab with *interface* as **Heat Transfer in Solids**, **Heat Transfer in Fluids**, or **Heat Transfer in Solids and Fluids** selected:

Boundaries>interface>Thin Layer
Pairs>interface>Thin Layer

Edge and Point Features

Line Heat Source

This node models a heat source (or sink) that is so thin that it has no thickness in the model geometry. It is available in 3D on edges. In 2D and 2D axisymmetric, it is available on points.

In theory, the temperature in a line source in 3D is plus or minus infinity (to compensate for the fact that the heat source does not have any volume). The finite element discretization used in COMSOL Multiphysics returns a finite temperature distribution along the line, but that distribution must be interpreted in a weak sense.

LINE HEAT SOURCE

Click the **General source** (the default) or **Heat rate** button.

- If **General source** is selected, enter a value for the distributed heat source, Q_l in unit power per unit length. A positive Q_l corresponds to heating while a negative Q_l corresponds to cooling.
- If **Heat rate** is selected, enter the heat rate P_l.

FRAME SELECTION

The settings are the same as for the Heat Source node and are described under **Frame Selection**.

LOCATION IN USER INTERFACE

Context menus

Heat Transfer in Solids>support>Line Heat Source
Heat Transfer in Fluids>support>Line Heat Source
Heat Transfer in Solids and Fluids>support>Line Heat Source

Ribbon

Physics Tab with **Heat Transfer in Solids**, **Heat Transfer in Fluids**, or **Heat Transfer in Solids and Fluids** selected:

Support>Line Heat Source

with *Support* as **Edges** in 3D and **Points** in 2D.

Point Heat Source

This node, available for 3D components, models a heat source (or sink) that is so small that it can be considered to have no spatial extension.

In theory, the temperature in a point source in 3D is plus infinity (to compensate for the fact that the heat source does not have a spatial extension). The finite element discretization used in COMSOL Multiphysics returns a finite value, but that value must be interpreted in a weak sense.

POINT HEAT SOURCE

Enter the **Point heat source** Q_p in unit power. A positive Q_p corresponds to heating while a negative Q_p corresponds to cooling.

FRAME SELECTION

This section is not available if the **Specify heat source radius option** is disabled. The settings are the same as for the Heat Source node and are described under **Frame Selection**.

LOCATION IN USER INTERFACE

Context menus

Heat Transfer in Solids>Points>Point Heat Source

Heat Transfer in Fluids>Points>Point Heat Source

Heat Transfer in Solids and Fluids>Points>Point Heat Source

Ribbon

Physics Tab with **Heat Transfer in Solids**, **Heat Transfer in Fluids**, or **Heat Transfer in Solids and Fluids** selected:

Points>Point Heat Source

Point Heat Source on Axis

This node, available for 2D axisymmetric components, models a heat source (or sink) that is so small that it can be considered to have no spatial extension.

The settings are the same as for the Point Heat Source node.

LOCATION IN USER INTERFACE

Context menus

Heat Transfer in Solids>Points>Point Heat Source on Axis

Heat Transfer in Fluids>Points>Point Heat Source on Axis

Heat Transfer in Solids and Fluids>Points>Point Heat Source on Axis

Ribbon

Physics Tab with **Heat Transfer in Solids**, **Heat Transfer in Fluids**, or **Heat Transfer in Solids and Fluids** selected:

Points>Point Heat Source on Axis

Heat Transfer Variables

In this section:

- Predefined Variables
- Global Variables
- Domain Heat Fluxes
- Domain Heat Fluxes
- Boundary Heat Fluxes
- Internal Boundary Heat Fluxes
- Domain Heat Sources
- Boundary Heat Sources
- Line and Point Heat Sources

Predefined Variables

This section lists some predefined variables that are available to evaluate heat fluxes, sources, and integral quantities used in energy balance. All the variable names begin with the physics interface name (the prefix). By default the Heat Transfer interface prefix is `ht`. As an example, you can access the variable named `tflux` using `ht.tflux` (as long as the physics interface is named `ht`).

TABLE 14-3: HEAT FLUX VARIABLES

VARIABLE	NAME	GEOMETRIC ENTITY LEVEL
`dEiInt`	Total Accumulated Heat Rate	Global
`ntfluxInt`	Total Net Heat Rate	Global
`QInt`	Total Heat Source	Global
`WnsInt`	Total Fluid Losses	Global
`dEiOInt`	Total Accumulated Energy Rate	Global
`ntefluxInt`	Total Net Energy Rate	Global
`tflux`	Total Heat Flux	Domains, boundaries
`dflux`	Conductive Heat Flux	Domains, boundaries
`trlflux`	Translational Heat Flux	Domains, boundaries
`teflux`	Total Energy Flux	Domains, boundaries
`ntflux`	Normal Total Heat Flux	Boundaries
`ndflux`	Normal Conductive Heat Flux	Boundaries
`ncflux`	Normal Convective Heat Flux	Boundaries
`ntrlflux`	Normal Translational Heat Flux	Boundaries
`nteflux`	Normal Total Energy Flux	Boundaries
`ndflux_u`	Internal Normal Conductive Heat Flux, Upside	Interior boundaries
`ndflux_d`	Internal Normal Conductive Heat Flux, Downside	Interior boundaries
`ncflux_u`	Internal Normal Convective Heat Flux, Upside	Interior boundaries
`ncflux_d`	Internal Normal Convective Heat Flux, Downside	Interior boundaries
`ntrlflux_u`	Internal Normal Translational Heat Flux, Upside	Interior boundaries

TABLE 14-3: HEAT FLUX VARIABLES

VARIABLE	NAME	GEOMETRIC ENTITY LEVEL
`ntrlflux_d`	Internal Normal Translational Heat Flux, Downside	Interior boundaries
`ntflux_u`	Internal Normal Total Heat Flux, Upside	Interior boundaries
`ntflux_d`	Internal Normal Total Heat Flux, Downside	Interior boundaries
`nteflux_u`	Internal Normal Total Energy Flux, Upside	Interior boundaries
`nteflux_d`	Internal Normal Total Energy Flux, Downside	Interior boundaries
`Qtot`	Domain Heat Sources	Domains
`Qbtot`	Boundary Heat Sources	Boundaries
`Qltot`	Line heat source (Line and Point Heat Sources)	Edges, Points (2D, 2D axial symmetry)
`Qptot`	Point heat source (Line and Point Heat Sources)	Points

Some of these variables are only available with the Heat Transfer Module (`rflux_u`, `rflux_d`, `rflux_z`, `q0_u`, `q0_d`, and `q0_z`), or when either the CFD Module or the Heat Transfer Module is added (`rflux` and `turbflux`).

Global Variables

This section describes variables defined by integrals. A concise notation denotes the different domains of integration: Ω is the geometry domain, $\partial\Omega_{\text{ext}}$ represents the exterior boundaries, and $\partial\Omega_{\text{int}}$ represents the interior boundaries.

TOTAL ACCUMULATED HEAT RATE

The total accumulated heat rate variable, `dEiInt`, is the variation of internal energy per unit time in the domain:

$$\text{dEiInt} = \frac{d}{dt}\int_{\Omega} \rho E d\omega$$

TOTAL NET HEAT RATE

The total net heat rate, `ntfluxInt`, is the integral of Total Heat Flux over all external boundaries:

$$\text{ntfluxInt} = \int_{\partial\Omega_{\text{ext}}} (\rho \mathbf{u} E - k\nabla T + \mathbf{q}_{\text{r}}) \cdot \mathbf{n} d\sigma$$

This indicates the sum of incoming and outgoing total heat flux through the system.

TOTAL HEAT SOURCE

The total heat source, `QInt`, accounts for all domain sources, interior boundary, edge and point sources, and radiative sources at interior boundaries:

$$\text{QInt} = \int_{\Omega} Q d\omega + \int_{\partial\Omega_{\text{int}}} Q_{\text{b}} d\omega + \int_{\partial\Omega_{\text{int}}} Q_{\text{r}} d\omega$$

TOTAL FLUID LOSSES

The total fluid losses, `WnsInt`, correspond to the work lost by a fluid by degradation of energy. These works are transmitted to the system through pressure work and viscous dissipation:

$$\text{WnsInt} = \int_{\Omega} (\mathbf{u} \cdot \nabla p_{\text{A}}) d\omega + \int_{\Omega} (-\tau : \nabla \mathbf{u}) d\omega$$

TOTAL ACCUMULATED ENERGY RATE

The total accumulated energy rate, `dEi0Int`, is the variation of total internal energy per unit time in the domain:

$$\mathrm{dEi0Int} = \frac{d}{dt}\int_{\Omega} \rho E_0 d\omega$$

where the total internal energy, E_0, is defined as

$$E_0 = E + \frac{\mathbf{u}\cdot\mathbf{u}}{2}$$

TOTAL NET ENERGY RATE

The total net energy rate, `ntefluxInt`, is the integral of Total Energy Flux over all external boundaries:

$$\mathrm{ntefluxInt} = \int_{\partial\Omega_{\mathrm{ext}}} (\rho\mathbf{u}H_0 - k\nabla T - \tau\mathbf{u} + \mathbf{q}_{\mathrm{r}})\cdot\mathbf{n}d\sigma$$

This indicates the sum of incoming and outgoing total energy flux through the system.

HEAT BALANCE

The following equality between COMSOL Multiphysics variables holds:

```
dEiInt + ntfluxInt = QInt - WnsInt
```

This is the most general form that can be used for time-dependent models. At steady-state the formula is simplified. The accumulated heat rate equals zero, so the total net heat rate (the sum of incoming and outgoing heat rates) should correspond to the heat and work sources:

```
ntfluxInt = QInt - WnsInt
```

The sign convention used in COMSOL Multiphysics for `QInt` is positive when energy is produced (as for a heater) and negative when energy is consumed (as for a cooler). For `WnsInt`, the losses that heat up the system are positive and the gains that cool down the system are negative.

For stationary models with convection by an incompressible flow, the heat balance becomes:

```
ntfluxInt = QInt
```

which corresponds to the conservation of convective and conductive flux as in:

$$\int_{\partial\Omega_{\mathrm{ext}}} \rho\mathbf{u}E\cdot\mathbf{n}d\sigma - \int_{\partial\Omega_{\mathrm{ext}}} k\nabla T\cdot\mathbf{n}d\sigma = Q_{\mathrm{Int}}$$

ENERGY BALANCE

The following equality between COMSOL Multiphysics predefined variables holds:

```
dEi0Int + ntefluxInt = QInt
```

In stationary models, `dEi0Int` is zero so the energy balance simplifies into:

```
ntefluxInt = QInt
```

At steady state, and without any additional heat source (`QInt` equal to zero), the integral of the net energy flux on all boundaries of the flow domain, `ntefluxInt`, vanishes. However, the corresponding integral of the net heat flux does not, in general, vanish. It corresponds instead to the losses from mass and momentum equations, such as `WnsInt` for pressure work and viscous dissipation in fluids. Hence, energy is the conserved quantity, not heat.

Domain Heat Fluxes

On domains the heat fluxes are vector quantities. The definition can vary depending on the active physics nodes and selected properties.

TOTAL HEAT FLUX

On domains the total heat flux, `tflux`, corresponds to the conductive and convective heat flux. For accuracy reasons the radiative heat flux is not included.

For solid domains — for example, the heat transfer in solids and biological tissue domains—the total heat flux is defined as:

$$\text{tflux} = \text{trlflux} + \text{dflux}$$

For fluid domains (for example, Heat Transfer in Fluids), the total heat flux is defined as:

$$\text{tflux} = \text{cflux} + \text{dflux}$$

CONDUCTIVE HEAT FLUX

The conductive heat flux variable, `dflux`, is evaluated using the temperature gradient and the effective thermal conductivity:

$$\text{dflux} = -k_{\text{eff}}\nabla T$$

In the general case k_{eff} is the thermal conductivity, k.

For heat transfer in fluids with turbulent flow, $k_{\text{eff}} = k + k_{\text{T}}$, where k_{T} is the turbulent thermal conductivity.

For heat transfer in porous media, k_{eff} is the effective conductivity computed from the solid and fluid conductivities.

CONVECTIVE HEAT FLUX

The convective heat flux variable, `cflux`, is defined using the internal energy, E:

$$\text{cflux} = \rho\mathbf{u}E$$

The internal energy, E, is defined as:

- $E = C_pT$ for solid domains
- $E = H - p/\rho$ for other fluid domains

where H is the enthalpy.

TRANSLATIONAL HEAT FLUX

Similar to convective heat flux but defined for solid domains with translation. The variable name is `trlflux`.

TOTAL ENERGY FLUX

The total energy flux, `teflux`, is defined when viscous dissipation is enabled:

$$\text{teflux} = \rho\mathbf{u}H_0 + \text{dflux} + \tau\mathbf{u}$$

where the total enthalpy, H_0, is defined as

$$H_0 = H + \frac{\mathbf{u}\cdot\mathbf{u}}{2}$$

Boundary Heat Fluxes

All the domain heat fluxes (vector quantity) are also available as boundary heat fluxes. The boundary heat fluxes are then equal to the mean value of the heat fluxes on adjacent domains. In addition, normal boundary heat fluxes (scalar quantity) are available on boundaries.

NORMAL TOTAL HEAT FLUX

The variable `ntflux` is defined as:

$$\text{ntflux} = \text{ndflux} + \text{ncflux} + \text{ntrlflux}$$

NORMAL CONDUCTIVE HEAT FLUX

The variable `ndflux` is defined on exterior boundaries as:

- $\text{ndflux} = -\text{dflux\_spatial}(T)$ if the adjacent domain is on the downside,
- $\text{ndflux} = -\text{uflux\_spatial}(T)$ if the adjacent domain is on the upside,

and, on interior boundaries, as:

$$\text{ndflux} = (\text{uflux\_spatial}(T) - \text{dflux\_spatial}(T))/2$$

NORMAL CONVECTIVE HEAT FLUX

The variable `ncflux` is defined as:

$$\text{ncflux} = \text{mean}(\text{cflux}) \cdot \mathbf{n}$$

NORMAL TRANSLATIONAL HEAT FLUX

The variable `ntrlflux` is defined as

$$\text{ntrlflux} = \text{mean}(\text{trlflux}) \cdot \mathbf{n}$$

NORMAL TOTAL ENERGY FLUX

The variable `nteflux` is defined as:

$$\text{nteflux} = \text{mean}(\text{teflux}) \cdot \mathbf{n} - \text{mean}(\text{dflux}) \cdot \mathbf{n} + \text{ndflux}$$

Internal Boundary Heat Fluxes

The internal normal boundary heat fluxes (scalar quantity) are available on interior boundaries. They are calculated using the upside and the downside value of heat fluxes from the adjacent domains.

INTERNAL NORMAL CONDUCTIVE HEAT FLUX, UPSIDE

The variable `ndflux_u` is defined as:

$$\text{ndflux\_u} = \text{uflux\_spatial}(T)$$

INTERNAL NORMAL CONDUCTIVE HEAT FLUX, DOWNSIDE

The variable `ndflux_d` is defined as:

$$\text{ndflux\_d} = \text{dflux\_spatial}(T)$$

INTERNAL NORMAL CONVECTIVE HEAT FLUX, UPSIDE

The variable `ncflux_u` is defined as:

$$\text{ncflux\_u} = \text{up}(\text{cflux}) \cdot \mathbf{un}$$

INTERNAL NORMAL CONVECTIVE HEAT FLUX, DOWNSIDE

The variable `ncflux_d` is defined as:

$$\text{ncflux\_d} = \text{down}(\text{cflux}) \cdot \mathbf{dn}$$

INTERNAL NORMAL TRANSLATIONAL HEAT FLUX, UPSIDE

The variable `ntrlflux_u` is defined as:

$$\text{ntrlflux\_u} = \text{up}(\text{trlflux}) \cdot \mathbf{un}$$

INTERNAL NORMAL TRANSLATIONAL HEAT FLUX, DOWNSIDE

The variable `ntrlflux_d` is defined as:

$$\text{ntrlflux\_d} = \text{down}(\text{trlflux}) \cdot \mathbf{dn}$$

INTERNAL NORMAL TOTAL HEAT FLUX, UPSIDE

The variable `ntflux_u` is defined as:

$$\text{ntflux\_u} = \text{ndflux\_u} + \text{ncflux\_u} + \text{ntrlflux\_u}$$

INTERNAL NORMAL TOTAL HEAT FLUX, DOWNSIDE

The variable `ntflux_d` is defined as:

$$\text{ntflux\_d} = \text{ndflux\_d} + \text{ncflux\_d} + \text{ntrlflux\_d}$$

INTERNAL NORMAL TOTAL ENERGY FLUX, UPSIDE

The variable `nteflux_u` is defined as:

$$\text{nteflux\_u} = \text{up}(\text{teflux}) \cdot \mathbf{un} - \text{up}(\text{dflux}) \cdot \mathbf{un} + \text{ndflux\_u}$$

INTERNAL NORMAL TOTAL ENERGY FLUX, DOWNSIDE

The variable `nteflux_d` is defined as:

$$\text{nteflux\_d} = \text{down}(\text{teflux}) \cdot \mathbf{dn} - \text{down}(\text{dflux}) \cdot \mathbf{dn} + \text{ndflux\_d}$$

Domain Heat Sources

The sum of the domain heat sources added by different physics features is available in the variable `Qtot`, which is the sum of Q's, which are the heat sources added by the Heat Source (described for the Heat Transfer interface) and Electromagnetic Heating (described for the Joule Heating interface) features.

Boundary Heat Sources

The sum of the boundary heat sources added by different boundary conditions is available in the variable, $Q_{\text{b,tot}}$ (SI unit: W/m^2). This variable `Qbtot` is the sum of:

- Q_{b}, which is the boundary heat source added by the Boundary Heat Source boundary condition.
- Q_{sh}, which is the boundary heat source added by the Electromagnetic Heating feature on its boundary selection (described for the Joule Heating interface).

Line and Point Heat Sources

The sum of the line heat sources is available in a variable called `Qltot` (SI unit: W/m).

The sum of the point heat sources is available in a variable called `Qptot` (SI unit: W).

Using the Boundary Conditions for the Heat Transfer Interfaces

In this section:

- Temperature and Heat Flux Boundary Conditions
- Overriding Mechanism for Heat Transfer Boundary Conditions

Temperature and Heat Flux Boundary Conditions

The heat equation accepts two basic types of boundary conditions: specified temperature and specified heat flux. The specified condition is of constraint type and prescribes the temperature on a boundary:

$$T = T_0 \qquad \text{on } \partial\Omega$$

while the latter specifies the inward heat flux

$$-\mathbf{n} \cdot \mathbf{q} = q_0 \qquad \text{on } \partial\Omega$$

where

- $\mathbf{q}$ is the *conductive heat flux vector* (SI unit: $\mathrm{W/m^2}$), $\mathbf{q} = -k\nabla T$.
- $\mathbf{n}$ is the normal vector on the boundary.
- q_0 is the *inward heat flux* (SI unit: $\mathrm{W/m^2}$), normal to the boundary.

The inward heat flux, q_0, is often a sum of contributions from different heat transfer processes (for example, radiation and convection). The special case $q_0 = 0$ is called *thermal insulation*.

A common type of heat flux boundary conditions is one for which $q_0 = h\cdot(T_{\mathrm{ext}} - T)$, where T_{ext} is the temperature far away from the modeled domain and the heat transfer coefficient, h, represents all the physics occurring between the boundary and "far away." It can include almost anything, but the most common situation is that h represents the effect of an exterior fluid cooling or heating the surface of a solid, a phenomenon often referred to as convective cooling or heating.

	The CFD Module and the Heat Transfer Module contain a set of correlations for convective heat flux and heating.

Overriding Mechanism for Heat Transfer Boundary Conditions

Many boundary conditions are available in heat transfer. Some of these can coexist (for example, Heat Flux and Thin Layer); others cannot (for example, Heat Flux and Thermal Insulation).

Several categories of boundary condition exist in heat transfer. Table 14-4 gives the overriding rules for these groups.

1 Temperature, Outflow

2 Thermal Insulation, Symmetry, Periodic Condition

3 Heat Flux

4 Boundary Heat Source, Line Heat Source on Axis

5 Surface-to-Ambient Radiation

6 Thin Layer

TABLE 14-4: OVERRIDING RULES FOR HEAT TRANSFER BOUNDARY CONDITIONS

A\B	1	2	3	4	5	6
1-Temperature	X	X				X
2-Thermal Insulation	X	X			X	
3-Heat Flux	X	X				
4-Boundary heat source						
5-Radiation		X			X	
6-Thin Layer	X					X

When there is a boundary condition *A* above a boundary condition *B* in the model tree and both conditions apply to the same boundary, use Table 14-4 to determine if *A* is overridden by *B* or not:

- Locate the line that corresponds to the *A* group (see above the definition of the groups). In the table above only the first member of the group is displayed.
- Locate the column that corresponds to the group of *B*.
- If the corresponding cell is empty, *A* and *B* contribute. If it contains an X, *B* overrides A.

Group 3 and group 4 boundary conditions are always contributing. That means that they never override any other boundary condition. But they might be overridden.

Example 1

Consider a boundary where **Temperature** is applied. Then a **Surface-to-Ambient Radiation** boundary condition is applied on the same boundary afterward.

- **Temperature** belongs to group 1.
- **Surface-to-Ambient Radiation** belongs to group 5.

The cell on the line of group 1 and the column of group 5 is empty so **Temperature** and **Surface-to-Ambient Radiation** contribute.

Example 2

Consider a boundary where **Heat Flux** is applied. Then a **Symmetry** boundary condition is applied on the same boundary afterward.

- **Heat Flux** belongs to group 3.
- **Symmetry** belongs to group 2.

The cell on the line of group 3 and the column of group 2 contains an X so **Heat Flux** is overridden by **Symmetry**.

This mechanism can be checked on the COMSOL Desktop, in the **Override and Contribution** section of each feature, as shown in the following table:

TABLE 14-5: OVERRIDE AND CONTRIBUTION SECTIONS

HEAT FLUX	SYMMETRY
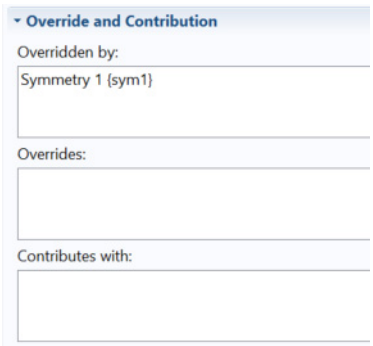	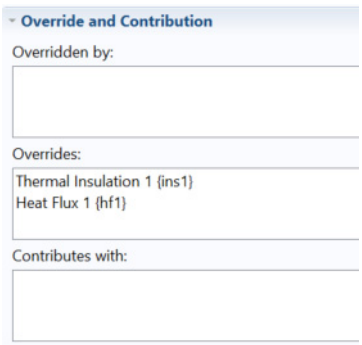

In Example 2 above, if **Symmetry** followed by **Heat Flux** is added, the boundary conditions contribute.

Heat Transfer Consistent and Inconsistent Stabilization Methods

The different versions of the Heat Transfer interface include the advanced option to set stabilization method parameters. This section has information about these options. To display the stabilization sections, click the **Show More Options** button ( ) and select **Stabilization** in the **Show More Options** dialog box.

In this section:

- Consistent Stabilization
- Inconsistent Stabilization

Consistent Stabilization

This section contains two consistent stabilization methods: streamline diffusion and crosswind diffusion. These are consistent stabilization methods, which means that they do not perturb the original transport equation.

The consistent stabilization methods are active by default. A stabilization method is active when the corresponding check box is selected.

STREAMLINE DIFFUSION

Streamline diffusion is active by default and should remain active for optimal performance for heat transfer in fluids or other applications that include a convective or translational term.

CROSSWIND DIFFUSION

Streamline diffusion introduces artificial diffusion in the streamline direction. This is often enough to obtain a smooth numerical solution provided that the exact solution of the heat equation does not contain any discontinuities. At sharp gradients, however, undershoots and overshoots can occur in the numerical solution. Crosswind diffusion addresses these spurious oscillations by adding diffusion orthogonal to the streamline direction—that is, in the crosswind direction.

Inconsistent Stabilization

This section contains a single stabilization method: isotropic diffusion. Adding isotropic diffusion is equivalent to adding a term to the physical diffusion coefficient. This means that the original problem is not solved, which is why isotropic diffusion is an inconsistent stabilization method. Although the added diffusion definitely attenuates spurious oscillations, try to minimize the use of isotropic diffusion.

By default there is no isotropic diffusion. To add isotropic diffusion, select the **Isotropic diffusion** check box. The field for the tuning parameter δ_{id} then becomes available. The default value is 0.25; increase or decrease the value of δ_{id} to increase or decrease the amount of isotropic diffusion.

	• Stabilization Techniques • Override and Contribution

Handling Frames in Heat Transfer

This section discusses heat transfer analysis with moving frames, when spatial and material frames do not coincide.

About Frames

When the **Enable conversions between material and spatial frame** check box is selected, all heat transfer interfaces account for deformation effects on heat transfer properties.

The entire physics (equations and variables) is defined in the spatial frame. When a moving mesh is detected, the user inputs for certain features are defined in the material frame and are converted so that all the corresponding variables contain the value in the spatial frame.

This subsection contains the list of all heat transfer nodes and the corresponding definition frame:

- Physics Feature Nodes and Definition Frame
- Definition Frame of Domain Nodes
- Definition Frame of Boundary Nodes
- Definition Frame of Edge and Point Nodes

Physics Feature Nodes and Definition Frame

The following explains the different values listed in the *definition frame* column in Table 14-6, Table 14-7, and Table 14-8:

Material: The inputs are entered by the user and defined in the material frame. Because the heat transfer variables and equations are defined in the spatial frame, the inputs are internally converted to the spatial frame.

Spatial: The inputs are entered by the user and defined in the spatial frame. No conversion is done.

Material/(Spatial): For these physics nodes, select from a menu to decide if the inputs are defined in the material or spatial frame. The default definition frame is the material frame.

(Material)/Spatial: For these physics nodes, select from a menu to decide if the inputs are defined in the material or spatial frame. The default definition frame is the spatial frame.

N/A: There is no definition frame for this physics node.

Definition Frame of Domain Nodes

TABLE 14-6: DOMAIN PHYSICS NODES FOR FRAMES

NODE NAME	DEFINITION FRAME
Cross Section	Spatial
Thickness	Spatial
Heat Source	Material/(Spatial)
Fluid	Spatial
Solid	Material
Initial Values	Spatial
Translational Motion	Material

Definition Frame of Boundary Nodes

TABLE 14-7: BOUNDARY PHYSICS NODES FOR FRAMES

NODE NAME	DEFINITION FRAME
Boundary Heat Source	Material/(Spatial)
Continuity	Spatial
Heat Flux	(Material)/Spatial
Outflow	N/A
Periodic Condition	Spatial
Surface-to-Ambient Radiation	Spatial
Symmetry	N/A
Temperature	Spatial
Thermal Insulation	N/A
Thin Layer	Material

The definition frames of the corresponding pair features are identical to the ones of the standard features.

Definition Frame of Edge and Point Nodes

TABLE 14-8: EDGE AND POINT NODES FOR FRAMES

NODE NAME	DEFINITION FRAME
Line Heat Source	Material/(Spatial)
Point Heat Source	Material

Solver Settings

The Heat Transfer interfaces define an elliptic partial differential equation for the temperature, T, of the form:

$$\rho C_p \frac{\partial T}{\partial t} + \nabla \cdot \mathbf{q} = Q$$

$$\mathbf{q} = -k\nabla T$$

with Dirichlet and Neumann boundary conditions at some boundaries:

$$T = T_0$$

$$-\mathbf{n} \cdot \mathbf{q} = q_0$$

In its basic form, the density, ρ, heat capacity, C_p, thermal conductivity, k, heat sources, Q, constraint temperatures, T_0, and heat fluxes, q_0, are all constant, which leads to a linear system. Here, linear solvers described in the next paragraphs are completely suited for the resolution.

However, nonlinearities can appear in the equation in the following cases:

- The material properties—ρ, C_p, and k—have a temperature dependency.
- The heat sources are not linear in temperature.
- The Neumann boundary condition is not linear in temperature, hence
  - A convective cooling condition of type $-\mathbf{n} \cdot \mathbf{q} = h(T_{\text{ext}} - T)$ keeps the linearity of the problem when the heat transfer coefficient, h, is constant.
  - A radiative condition of type $-\mathbf{n} \cdot \mathbf{q} = \varepsilon\sigma({T_{\text{amb}}}^4 - T^4)$ is strongly nonlinear.

Different nonlinear solvers are also provided for these kinds of problems.

The information about default solvers given below are specific to the Heat Transfer interfaces when the **Stationary** and **Time-Dependent** studies are used. A comprehensive description of solver settings and corresponding theory are available in the Study and Study Step Types section.

See also Studies and Solvers

Linear Solver

DEFAULT SETTINGS

The default linear solver is determined based on the number of degrees of freedom and physics interface settings.

For small number of degrees of freedom, the direct PARDISO solver is used. It is known to be robust and fast for small-sized problems.

For larger models, the linear iterative GMRES solver with multigrid preconditioner is used. In most cases, SOR is the presmoother and postsmoother. This solver is memory effective and fast for large models. When the heat transfer model contains settings that lead to a system matrix with 0 on the diagonal (for example, Lagrange multipliers for weak constraints), SOR cannot be used and is replaced by Vanka, which is usually slower and uses more memory.

TUNING LINEAR SOLVER

Tuning the linear solver may be considered in case of nonconvergence or low performance. When convergence fails you should first verify that this is not due to an ill-posed model, or inappropriate settings in the Time-Dependent study or nonlinear solver.

Several options are available to tune the linear solver settings. This paragraph focuses only on the most commonly used ones.

Switch to PARDISO

When the GMRES solver with multigrid preconditioner is set by default, using PARDISO instead can be considered provided that enough RAM is available. Indeed, PARDISO usually converges easily but uses much more memory than the default iterative solver. If PARDISO does not converge, it may indicate that there is an issue in the model definition or with other solver settings.

Optimize GMRES/Multigrid for Memory

In order to optimize further the memory needed by the iterative solver, the number of mesh elements on the coarser multigrid level can be reduced by, for instance, increasing the **Mesh coarsening factor** or the **Number of multigrid levels**. The latter strategy may also increase the resolution time.

Optimize GMRES/Multigrid for Convergence

When the linear solver has difficulties to converge, the following settings can be tuned:

- When the convergence graph of GMRES shows a slow down every 50 iterations, the **Number of iteration before restart** parameter (default value of 50) should be increased—doubled for example. This may also increase the memory consumption.
- Increasing the **Number of iteration** in the Multigrid settings, and in the presmoother and postsmoother nodes improves the quality of the preconditioner and convergence of GMRES.
- Since an excessive difference between two multigrid levels can affect the convergence, lowering the **Mesh coarsening factor** in the Multigrid settings can help convergence.
- Consider creating the multigrid level meshes manually if the automatic coarsening method fails or leads to poor quality meshes.

Choosing the Right Linear System Solver

Nonlinear Solver

DEFAULT SETTINGS

Nonlinear solver settings depend on the heat transfer model and on the study type.

Fully Coupled Solver Attribute

Heat transfer models with and without surface-to-ambient radiation use a fully coupled nonlinear solver attribute by default. The Jacobian update is set to minimal. A Newton nonlinear method is set by default with

- Automatic damping factor computation for stationary studies
- Constant damping factor for time-dependent studies

Segregated Solver Attribute

The segregated solver attribute is set by default when another physics interface is solved together with heat transfer. The dependent variables of the heat transfer interface are placed in a separate segregated group. It happens as well

for the modeling of radiation in participating media using the Discrete Ordinates Method, or for the computation of damage in biological tissue (options available with the Heat Transfer Module.

TUNING THE NONLINEAR SOLVER

Default solver settings are defined to handle efficiently classical configurations. For particular applications, the default settings may need modifications to improve the robustness and performance of the solver.

Optimize Nonlinear Solver for Robustness

When the nonlinear solver fails or converges erratically, different options can be considered:

- Using the **Automatic highly nonlinear (Newton)** option forces to start the computation with a very low damping factor and increases it carefully. Alternatively a low constant damping factor can be used. The damping factor ranges between 0 and 1. A constant damping factor equal to 0.1 is a very low value and should be robust but slow to converge. For low values of the damping factor, it is thus usually needed to increase the number of nonlinear iterations. If the nonlinear solver is unstable with such a damping factor then the automatic option should be used because it makes it possible to start with a lower damping factor and gradually increases it.
- A good initial value, as close as possible from the expected solution and consistent with the boundary conditions, helps to guide the nonlinear solver to a stable physical solution. To do that:
  - Try to ramp the temperature on the boundary from the initial to the desired value by using a auxiliary sweep—for stationary problems—or a time-dependent step function—for time-dependent problems.
  - Use results from a simplified problem, for instance with no temperature dependency, or using a one-way multiphysics coupling, as initial value.

  Note that it is sometimes easier to update the boundary conditions than the initial condition to get consistent initial settings.
- When it is not possible to provide a good initial value, the segregated solver associated with low damping factors in each segregated step helps to achieve convergence.
- Forcing the Jacobian update at every iteration ensures that the nonlinear solver iterates using optimal information from the equation system. This is needed when nonlinearities are due to the temperature itself—for example, in case of strong temperature dependency of material properties—or to another variable solved in the same segregated group as the temperature—for example, in natural convection models.

Optimize Convergence Speed

Low convergence can be improved by following ways:

- Using a constant damping factor equal to 1 for linear problems. The linearity is determined at the beginning of the resolution and indicated in the **Log** section of the solver window.
- Providing a good initial value is an asset for computational speed.
- In the convergence area, the fully coupled solver has a better convergence rate than the segregated solver.
- Using minimal Jacobian update option avoid to spend time in Jacobian computation. This is suited for linear models and models with mild nonlinearities.

Time-Dependent Study Step

DEFAULT SETTINGS FOR HEAT TRANSFER INTERFACES

The default time-stepping method for the Heat Transfer interfaces is BDF at second order. It excludes algebraic variable from the error estimate.

TUNING THE TIME-DEPENDENT SOLVER

The quality of the time-stepping influences the nonlinear solver convergence. Tiny time steps usually lead to mildly nonlinear problems at each time step whereas large time steps can result in (fewer) highly nonlinear problems.

The default solver settings for transient heat transfer defines the maximal number of nonlinear iterations to 5. If this is not sufficient, it is recommended to use smaller time steps and to verify if the model definition does not contain discontinuities in time. If so, consider using smooth step functions to model sharp variations in time.

There are several ways to control the time step size:

- An implicit way is to define a lower relative tolerance in the study settings. When the relative tolerance is lowered, the absolute tolerance should be reduced in the same proportion.
- The most explicit way is to define a maximum time step. This is an appropriate option when the same maximum time step is relevant for the entire simulation. Otherwise, it is possible to include times of interest in the **Times** field of the time-dependent study and to use the **Intermediate** option in the **Time Stepping** settings.
- Lastly you can control the time step by triggering an event when a particular condition is meet (see the documentation about The Events Interface). This advanced method can be efficient when the other simpler methods are not applicable.

It is also recommended to inspect the solver log and check the default scaling of dependent variables in case of convergence failure. In case of incorrect automatic scaling, consider using **Manual** settings in the **Dependent Variable** attribute node.

	Time-Dependent Solver

Guidelines for Solving Multiphysics Problems

MULTIPHYSICS MODELS

Unless the model contains a multiphysics node that defines a coupling between a Heat Transfer interface and another interface (see Multiphysics Couplings below), each physics interface defines default solver settings that are merged.

The Heat Transfer interfaces always define a dedicated segregated group that uses a linear solver optimized for the heat transfer equations. For strongly coupled models, it may be efficient to merge two (or more) segregated steps. In this case, a unique linear solver must be chosen for the fully coupled solver or the new segregated group.

Time-dependent settings from different physics interfaces may compete. When the different settings are merged the strictest one is kept.

MULTIPHYSICS COUPLINGS

When a Heat Transfer interface is coupled with another physics interface through a multiphysics coupling feature, additional predefined default settings are loaded. The next two paragraphs describes the subtleties of the Nonisothermal Flow and Joule Heating interfaces.

Nonisothermal Flow

The **Nonisothermal Flow** multiphysics coupling controls the solver settings for the flow and the temperature dependent variables.

When it assumes a weak coupling between the flow and the heat interfaces (typically no Volume Force feature in the flow interface), the default solver contains dedicated segregated groups for heat and flow dependent variables.

Each uses the default linear solver of the corresponding interface, except that the presmoother and postsmoother in the GMRES iterative solver switches from SOR to SCGS.

When a strong coupling is assumed (at least one Volume Force feature in the flow interface), the default solver merges the temperature, pressure, and velocity. In this case, the linear solver corresponds to the default linear solver of the flow interface. The Jacobian is updated once per time step.

Joule Heating

By default, the Joule Heating multiphysics interface solves the temperature and the electric potential in segregated steps.

15

Solid Mechanics

This chapter describes the Solid Mechanics interface, which is found under the **Structural Mechanics** branch ( ) when adding a physics interface.

For more information about solid mechanics modeling and theory, see the *Structural Mechanics Module User's Guide*, which you can install also without a license for the Structural Mechanics Module.

The Solid Mechanics Interface

The **Solid Mechanics (solid)** interface ( ), found under the **Structural Mechanics** branch ( ) when adding a physics interface, is intended for general structural analysis of 3D, 2D, or axisymmetric bodies. In 2D, plane stress or plane strain assumptions can be used. The Solid Mechanics interface is based on solving the equations of motion together with a constitutive model for a solid material. Results such as displacements, stresses, and strains are computed.

The functionality provided by the Solid Mechanics interface depends on the products you are using. The Acoustics Module, MEMS Module, and Structural Mechanics Module add several features, for example geometric nonlinearity and advanced boundary conditions such as contact, follower loads, and nonreflecting boundaries.

The default material is a Linear Elastic Material.

With either the Nonlinear Structural Materials Module or the Geomechanics Module, the physics interface is extended with more materials, for example, material models for plasticity, hyperelasticity, creep, and concrete.

	For a detailed overview of the functionality available in each product, visit http://www.comsol.com/products/specifications/

When this physics interface is added, these default nodes are also added to the **Model Builder** — **Linear Elastic Material**, **Free** (a boundary condition where boundaries are free, with no loads or constraints), and **Initial Values**. Then, from the **Physics** toolbar, you can add other nodes that implement, for example, solid mechanics material models, boundary conditions, and loads. You can also right-click **Solid Mechanics** to select physics features from the context menu.

SETTINGS

The **Label** is the default physics interface name.

The **Name** is used primarily as a scope prefix for variables defined by the physics interface. Refer to such physics interface variables in expressions using the pattern `<name>.<variable_name>`. In order to distinguish between variables belonging to different physics interfaces, the `name` string must be unique. Only letters, numbers, and underscores (_) are permitted in the **Name** field. The first character must be a letter.

The default **Name** (for the first physics interface in the model) is `solid`.

2D APPROXIMATION

From the **2D approximation** list, select **Plane stress** or **Plane strain** (the default). Plane stress is relevant for structures which are thin in the out-of-plane direction, such as a thin plate. Plane strain is relevant when the 2D model can be considered as a cut through an object that is long in the out-of-plane direction. For more information see the theory section.

When modeling using plane stress, the Solid Mechanics interface solves for the out-of-plane strain displacement derivative, $\frac{\partial w}{\partial Z}$, in addition to the displacement field $\mathbf{u}$.

When combining Solid Mechanics with other types of physics, there is often an assumption that the out-of-plane extension is infinitely long. This is the case in, for example, Acoustic-Structure interaction problems. In these cases, **Plane strain** is usually the correct choice.

THICKNESS

For 2D components, enter a value or expression for the **Thickness** d. The default value of 1 m is suitable for plane strain models, where it represents a unit-depth slice, for example. For plane stress models, enter the actual thickness, which should be small compared to the size of the plate for the plane stress assumption to be valid. In Acoustic-Structure Interaction problems, the **Thickness** should be set to 1 m.

Use a Change Thickness node to change thickness in parts of the geometry if necessary.

STRUCTURAL TRANSIENT BEHAVIOR

From the **Structural transient behavior** list, select **Include inertial terms** (the default) or **Quasi-static**. Use **Quasi-static** to treat the elastic behavior as quasi-static (with no mass effects; that is, no second-order time derivatives). Selecting this option gives a more efficient solution for problems where the variation in time is slow when compared to the natural frequencies of the system. The default solver for the time stepping is changed from Generalized alpha to BDF when **Quasi-static** is selected.

For problems with creep, and sometimes viscoelasticity, the problem can be considered as quasi-static. This is also the case when the time dependence exists only in some other physics, like a transient heat transfer problem causing thermal strains.

REFERENCE POINT FOR MOMENT COMPUTATION

Enter the coordinates for the **Reference point for moment computation** $\mathbf{x}_{\text{ref}}$ (variable `refpnt`). The resulting moments (applied or as reactions) are then computed relative to this reference point. During the results and analysis stage, the coordinates can be changed in the **Parameters** section in the result nodes.

DEPENDENT VARIABLES

The physics interface uses the global spatial components of the **Displacement field** u as dependent variables. The default names for the components are (u, v, w) in 3D. In 2D the component names are (u, v), and in 2D axisymmetry they are (u, w). You can however not use the 'missing' component name in the 2D cases as a parameter or variable name, since it is still used internally.

You can change both the field name and the individual component names. If a new field name coincides with the name of another displacement field, the two fields (and the interfaces that define them) share degrees of freedom and dependent variable component names. You can use this behavior to connect a Solid Mechanics interface to a Shell directly attached to the boundaries of the solid domain, or to another Solid Mechanics interface sharing a common boundary.

A new field name must not coincide with the name of a field of another type (that is, it must contain a displacement field), or with a component name belonging to some other field. Component names must be unique within a model except when two interfaces share a common field name.

DISCRETIZATION

The default is to use **Quadratic** shape functions for the **Displacement field**. Using **Linear** shape functions will give what is sometimes called *constant stress* elements. Such a formulation will, for many problems, make the model overly stiff, and many elements may be needed for an accurate resolution of the stresses. To display other settings for this section, click the **Show More Options** button ( ) and select **Advanced Physics Options** in the **Show More Options** dialog box.

	See Table 2-4 for links to common sections and Table 2-5 for common feature nodes. You can also search for information: press F1 to open the **Help** window or Ctrl+F1 to open the **Documentation** window.

	• *Stresses in a Pulley*: Application Library path **COMSOL_Multiphysics/Structural_Mechanics/stresses_in_pulley** • *Eigenvalue Analysis of a Crankshaft*: Application Library path **COMSOL_Multiphysics/Structural_Mechanics/crankshaft**

Domain, Boundary, Edge, Point, and Pair Nodes for Solid Mechanics

The Solid Mechanics Interface has these domain, boundary, edge, point, and pair nodes and subnodes (listed in alphabetical order), which are available from the **Physics** ribbon toolbar (Windows users), **Physics** context menu (macOS or Linux users), or by right-clicking to access the context menu (all users).

	In general, to add a node, go to the **Physics** toolbar, no matter what operating system you are using. Subnodes are available by clicking the parent node and selecting it from the **Attributes** menu.

FEATURES AVAILABLE FROM SUBMENUS

Many features for the Solid Mechanics interface are added from submenus in the Physics toolbar groups or context menu (when you right-click the node). The submenu name is the same in both cases.

The submenus at the **Domain** level are **Material Models**, **Volume Forces**, **Mass, Spring, and Damper**, and **Domain Constraints**.

The submenus at the **Boundary** level are **Connections**, **Pairs, Mass, Spring, and Damper**, and **More Constraints**.

There are also the **Edges** and **Points** submenus.

Note: Some submenus are only present with certain COMSOL products.

FORCE LOADS

Note that you can add force loads acting on all levels of the geometry for the physics interface. Add a:

- Body Load to domains (to model gravity effects, for example).
- Boundary Load to boundaries (a pressure acting on a boundary, for example).

- Edge Load to edges in 3D (a force distributed along an edge, for example).
- Point Load to points (concentrated forces at points).

	If there are subsequent constraints specified on the same geometrical entity, the last one takes precedence.

	For 2D axisymmetric components, COMSOL Multiphysics takes the axial symmetry boundaries (at $r = 0$) into account and automatically adds an **Axial Symmetry** node to the component that is valid on the axial symmetry boundaries only.

- Body Load
- Boundary Load
- Change Thickness
- Edge Load
- Fixed Constraint
- Free
- Initial Values
- Linear Elastic Material
- Periodic Condition
- Point Load
- Point Load (on Axis)
- Prescribed Displacement
- Rigid Motion Suppression
- Ring Load
- Roller
- Symmetry

	See Table 2-4 for links to common sections and Table 2-5 for common feature nodes. You can also search for information: press F1 to open the **Help** window or Ctrl+F1 to open the **Documentation** window.

The Damping subnode is available from Linear Elastic Material nodes.

Initial Values

The **Initial Values** node adds initial values for the displacement field and structural velocity field that can serve as an initial condition for a transient simulation or as an initial guess for a nonlinear analysis. In addition to the default **Initial Values** node always present in the interface, you can add more **Initial Values** nodes if needed.

INITIAL VALUES

Enter values or expressions for the initial values of the **Displacement field u** (the displacement components u, v, and w in 3D), and the **Structural velocity field** $\partial\mathbf{u}/\partial t$.

LOCATION IN USER INTERFACE

Context Menus

Solid Mechanics>Initial Values

Ribbon

Physics Tab with **Solid Mechanics** selected:

Domains>Solid Mechanics>Initial Values

Change Thickness

Use the **Change Thickness** node to model domains with a thickness other than the overall thickness defined in the physics interface's **Thickness** section. The **Change Thickness** node is available in domains in 2D.

CHANGE THICKNESS

Enter a value for the **Thickness** d. This value replaces the overall thickness for the selected domains or boundaries.

LOCATION IN USER INTERFACE

Context Menus

Solid Mechanics>Change Thickness

Ribbon

Physics Tab with **Solid Mechanics** selected:

Domains>Solid Mechanics>Change Thickness

Linear Elastic Material

The **Linear Elastic Material** node adds the equations for a linear elastic solid and an interface for defining the elastic material properties.

By adding the following subnode to the **Linear Elastic Material** node you can incorporate damping effects; see Damping.

COORDINATE SYSTEM SELECTION

The **Global coordinate system** is selected by default. The **Coordinate system** list contains any additional coordinate systems that the model includes (except boundary coordinate systems). The coordinate system is used for interpreting directions of orthotropic and anisotropic material data and when stresses or strains are presented in a local system. The coordinate system must have orthonormal coordinate axes, and be defined in the material frame. Many of the possible subnodes inherit the coordinate system settings.

LINEAR ELASTIC MATERIAL

To use a mixed formulation by adding the pressure as an extra dependent variable to solve for, select the **Nearly incompressible material** check box. For a material with a very low compressibility, using only displacements as degrees of freedom may lead to a numerically ill-posed problem.

Define the **Solid model** and the linear elastic material properties.

Solid Model

To use a mixed formulation by adding the pressure as an extra dependent variable to solve for, select the **Nearly incompressible material** check box.

The **Solid model** is always **Isotropic** for a linear elastic material that has the same properties in all directions.

Density

The default **Density** ρ uses values **From material**. For **User defined** enter another value or expression.

	The density is needed for dynamic analysis and when computing mass properties.

Specification of Elastic Properties for Isotropic Materials

For an **Isotropic Solid model**, from the **Specify** list select a pair of elastic properties for an isotropic material—**Young's modulus and Poisson's ratio**, **Young's modulus and shear modulus**, **Bulk modulus and shear modulus**, **Lamé parameters**, or **Pressure-wave and shear-wave speeds**. For each pair of properties, select from the applicable list to use the value **From material** or enter a **User defined** value or expression.

	Each of these pairs define the elastic properties and it is possible to convert from one set of properties to another.

The individual property parameters are:

- **Young's modulus** (elastic modulus) E.
- **Poisson's ratio** ν.
- **Shear modulus** G.
- **Bulk modulus** K.
- **Lamé parameter** λ and **Lamé parameter** μ.
- **Pressure-wave speed** (longitudinal wave speed) c_p.
- **Shear-wave speed** (transverse wave speed) c_s. This is the wave speed for a solid continuum. In plane stress, for example, the actual speed with which a longitudinal wave travels is lower than the value given.

About Isotropic Material and Elastic Moduli

The elasticity matrix is

$$D = \frac{E}{(1+\nu)(1-2\nu)}\begin{bmatrix} 1-\nu & \nu & \nu & 0 & 0 & 0 \\ \nu & 1-\nu & \nu & 0 & 0 & 0 \\ \nu & \nu & 1-\nu & 0 & 0 & 0 \\ 0 & 0 & 0 & \frac{1-2\nu}{2} & 0 & 0 \\ 0 & 0 & 0 & 0 & \frac{1-2\nu}{2} & 0 \\ 0 & 0 & 0 & 0 & 0 & \frac{1-2\nu}{2} \end{bmatrix}$$

Different pairs of elastic moduli can be used, and as long as two moduli are defined. The others can be computed according to Table 15-1.

TABLE 15-1: EXPRESSIONS FOR THE ELASTIC MODULI.

DESCRIPTION	VARIABLE	$D(E,\nu)$	$D(K,G)$	$D(\lambda,\mu)$
Young's modulus	E		$\frac{9KG}{3K+G}$	$\mu\frac{3\lambda+2\mu}{\lambda+\mu}$
Poisson's ratio	ν		$\frac{1}{2}\left(1-\frac{3G}{3K+G}\right)$	$\frac{\lambda}{2(\lambda+\mu)}$
Bulk modulus	K	$\frac{E}{3(1-2\nu)}$		$\lambda+\frac{2\mu}{3}$
Shear modulus	G	$\frac{E}{2(1+\nu)}$		μ
Lamé parameter λ	λ	$\frac{E\nu}{(1+\nu)(1-2\nu)}$	$K-\frac{2G}{3}$	

TABLE 15-1: EXPRESSIONS FOR THE ELASTIC MODULI.

DESCRIPTION	VARIABLE	$D(E,\nu)$	$D(K,G)$	$D(\lambda,\mu)$
Lamé parameter μ	μ	$\frac{E}{2(1+\nu)}$	G	
Pressure-wave speed	c_p		$\sqrt{\frac{K+4G/3}{\rho}}$	
Shear-wave speed	c_s		$\sqrt{G/\rho}$	

According to Table 15-1, the elasticity matrix D for isotropic materials is written in terms of Lamé parameters λ and μ,

$$D = \begin{bmatrix} \lambda+2\mu & \lambda & \lambda & 0 & 0 & 0 \\ \lambda & \lambda+2\mu & \lambda & 0 & 0 & 0 \\ \lambda & \lambda & \lambda+2\mu & 0 & 0 & 0 \\ 0 & 0 & 0 & \mu & 0 & 0 \\ 0 & 0 & 0 & 0 & \mu & 0 \\ 0 & 0 & 0 & 0 & 0 & \mu \end{bmatrix}$$

or in terms of the bulk modulus K and shear modulus G:

$$D = \begin{bmatrix} K+\frac{4G}{3} & K-\frac{2G}{3} & K-\frac{2G}{3} & 0 & 0 & 0 \\ K-\frac{2G}{3} & K+\frac{4G}{3} & K-\frac{2G}{3} & 0 & 0 & 0 \\ K-\frac{2G}{3} & K-\frac{2G}{3} & K+\frac{4G}{3} & 0 & 0 & 0 \\ 0 & 0 & 0 & G & 0 & 0 \\ 0 & 0 & 0 & 0 & G & 0 \\ 0 & 0 & 0 & 0 & 0 & G \end{bmatrix}$$

GEOMETRIC NONLINEARITY

The settings in this section are not applicable in the core COMSOL Multiphysics product.

LOCATION IN USER INTERFACE

Context Menus

Solid Mechanics>Material Models>Linear Elastic Material

Ribbon

Physics Tab with **Solid Mechanics** selected:

Domains>Material Models>Linear Elastic Material

Damping

Using the **Damping** subnode, you can add damping to the material model. Damping can be used in Time Dependent, Eigenfrequency, and Frequency Domain studies; for other study types, the settings in the **Damping** subnode are ignored.

You can add the **Damping** subnode to the Linear Elastic Material node.

DAMPING SETTINGS

The **Damping type** is always **Rayleigh damping**.

Enter the **Mass damping parameter** α_{dM} and the **Stiffness damping parameter** β_{dK}.

In this damping model, the damping parameter ξ is expressed in terms of the mass m and the stiffness k as

$$\xi = \alpha_{dM} m + \beta_{dK} k$$

That is, Rayleigh damping is proportional to a linear combination of the stiffness and mass; there is no direct physical interpretation of the *mass damping parameter* α_{dM} and the stiffness damping parameter β_{dM}.

LOCATION IN USER INTERFACE

Context Menus

Solid Mechanics>Linear Elastic Material>Damping

Ribbon

Physics Tab with a **Linear Elastic Material** node selected in the model tree: **Attributes>Damping**

Free

The **Free** node is the default boundary condition. It means that there are no constraints and no loads acting on the boundary. When the physics interfaces is added, a default **Free** node is added. If you look at the selections for this node, it will show all boundaries which do not have any boundary conditions applied.

You can manually add **Free** nodes to override other boundary conditions. This is however seldom needed.

LOCATION IN USER INTERFACE

Context menus

Solid Mechanics>Free

Ribbon

Physics Tab with a Solid Mechanics interface selected:

Boundaries>Solid Mechanics>Free

Prescribed Displacement

The **Prescribed Displacement** node adds a condition where the displacements are prescribed in one or more directions to the geometric entity (domain, boundary, edge, or point).

If a displacement is prescribed in one direction, this leaves the solid free to deform in the other directions.

You can also define more general displacements as a linear combination of the displacements in each direction.

	If a zero displacement is applied in all directions, this is the same as a Fixed Constraint.

PRESCRIBED DISPLACEMENT

Define the prescribed displacements using a **Standard notation** (the default) or a **General notation**.

Standard Notation

To define the displacements individually, click the **Standard notation** button.

Select one or all of the **Prescribed in x direction**, **Prescribed in y direction**, and for 3D components, **Prescribed in z direction** check boxes. Then enter a value or expression for u_0, v_0, and for 3D components, w_0. For 2D

axisymmetric components, select one or both of the **Prescribed in *r* direction** and **Prescribed in z direction** check boxes. Then enter a value or expression for u_0 and w_0.

General Notation

Click the **General notation** to specify the displacements using a general notation that includes any linear combination of displacement components. For example, for 2D components, use the relationship

$$H\begin{bmatrix} u \\ v \end{bmatrix} = R$$

For the **H** matrix H, select **Isotropic**, **Diagonal**, **Symmetric**, or **Full** and then enter values as needed in the field or matrix. Enter values or expressions for the **R** vector R.

For example, to achieve the condition $u = v$, use the settings

$$H = \begin{bmatrix} 1 & -1 \\ 0 & 0 \end{bmatrix}, \qquad R = \begin{bmatrix} 0 \\ 0 \end{bmatrix}$$

which force the domain to move only diagonally in the xy-plane.

CONSTRAINT SETTINGS

To display this section, click the **Show More Options** button ( ) and select **Advanced Physics Options** in the **Show More Options** dialog box.

LOCATION IN USER INTERFACE

Context Menus

Solid Mechanics>Domain Constraints>Prescribed Displacement
Solid Mechanics>Prescribed Displacement (Boundary)
Solid Mechanics>Edges>Prescribed Displacement
Solid Mechanics>Points>Prescribed Displacement

Ribbon

Physics Tab with **Solid Mechanics** selected:

Domains>Domain Constraints>Prescribed Displacement
Boundaries>Solid Mechanics>Prescribed Displacement
Edges>Solid Mechanics>Prescribed Displacement
Points>Solid Mechanics>Prescribed Displacement

Fixed Constraint

The **Fixed Constraint** node adds a condition that makes the geometric entity fixed (fully constrained); that is, the displacements are zero in all directions on the selected boundaries. If there are rotational degrees of freedom, they will also be zero.

CONSTRAINT SETTINGS

To display this section, click the **Show More Options** button ( ) and select **Advanced Physics Options** in the **Show More Options** dialog box.

	• Constraint Reaction Terms • Weak Constraints • Constraint Settings • Excluded Surfaces, Excluded Edges, and Excluded Points

LOCATION IN USER INTERFACE

Context Menus

Solid Mechanics>Domain Constraints>Fixed Constraint
Solid Mechanics>Fixed Constraint (Boundary)
Solid Mechanics>Edges>Fixed Constraint
Solid Mechanics>Points>Fixed Constraint

Ribbon

Physics Tab with **Solid Mechanics** selected:

Domains>Domain Constraints>Fixed Constraint
Boundaries>Solid Mechanics>Fixed Constraint
Edges>Solid Mechanics>Fixed Constraint
Points>Solid Mechanics>Fixed Constraint

Roller

The **Roller** node adds a roller constraint as the boundary condition; that is, the displacement is zero in the direction perpendicular (normal) to the boundary, but the boundary is free to move in the tangential direction.

CONSTRAINT SETTINGS

To display this section, click the **Show More Options** button ( ) and select **Advanced Physics Options** in the **Show More Options** dialog box.

LOCATION IN USER INTERFACE

Context menus

Solid Mechanics>Roller

Ribbon

Physics Tab with **Solid Mechanics** selected:

Boundaries>Solid Mechanics>Roller

Symmetry

The **Symmetry** node adds a boundary condition that represents symmetry in the geometry and in the loads. A symmetry condition is free in the plane and fixed in the out-of-plane direction.

CONSTRAINT SETTINGS

To display this section, click the **Show More Options** button ( ) and select **Advanced Physics Options** in the **Show More Options** dialog box.

LOCATION IN USER INTERFACE

Context menus

Solid Mechanics>More Constraints>Symmetry

Ribbon

Physics Tab with **Solid Mechanics** selected:

Boundaries>More Constraints>Symmetry

Rigid Motion Suppression

The **Rigid Motion Suppression** node adds a minimum number of constraints required to suppress any rigid body modes. The constraints are selected so that there will be no reaction forces if the external loads are self-equilibrating.

The constraint will, depending on geometrical dimension, be applied to one, two, or three points as needed. These points are automatically picked from the selected geometrical domains.

If you need to constrain several domains which are not physically connected, you must add as many **Rigid Motion Suppression** nodes as there are disconnected objects.

LOCATION IN USER INTERFACE

Context menus

Solid Mechanics>Domain Constraints>Rigid Body Suppression

Ribbon

Physics Tab with **Solid Mechanics** selected:

Domains>Domain Constraints>Rigid Body Suppression

Body Load

Add a **Body Load** to domains for modeling volumetric loads.

FORCE

Select a **Load type** — **Force per unit volume** (the default), **Total force**, or for 2D components, **Force per unit area**.

Then enter values or expressions for the components in the matrix based on the selection and the space dimension.

- After selecting a **Load type**, the **Load** list normally only contains **User defined**. When combining with another physics interface that can provide this type of load, it is also possible to choose a predefined load from this list.
- For **Total force**, COMSOL Multiphysics divides the total force by the volume of the domains where the load is active. For 2D components, and if **Force per unit area** is selected, the body load as force per unit volume is then the value of F divided by the thickness.

LOAD TYPE	VARIABLE	SI UNIT	GEOMETRIC ENTITY LEVEL	SPACE DIMENSION (COMPONENTS)
Force per unit volume	$\mathbf{F}_V$	N/m^3	domains	3D (x, y, z) 2D (x, y) 2D axisymmetric (r, z)
Force per unit area	$\mathbf{F}_A$	N/m^2	domains	2D (x, y)
Total force	$\mathbf{F}_{tot}$	N	domains	3D (x, y, z) 2D (x, y) 2D axisymmetric (r, z)

LOCATION IN USER INTERFACE

Context Menus

Solid Mechanics>Volume Forces>Body Load

Ribbon

Physics Tab with **Solid Mechanics** selected:

Domains>Volume Forces>Body Load

Boundary Load

Use a **Boundary Load** to apply tractions or pressure to boundaries.

FORCE

Select a **Load type** — **Force per unit area** (the default), **Pressure**, **Total force**, or for 2D components, **Force per unit length**. Then enter values or expressions for the components in the matrix based on the selection and the space dimension.

- For **Force per unit area**, the body load as force per unit volume is then the value of $\boldsymbol{F}$ divided by the thickness.
- For **Total force**, COMSOL Multiphysics then divides the total force by the area of the surfaces where the load is active.
- For **Pressure**, it can represent a pressure or another external pressure. The pressure is positive when directed toward the solid.

After selecting a **Load type**, the **Load** list normally only contains **User defined**. When combining with another physics interface that can provide this type of load, it is also possible to choose a predefined load from this list.

LOAD TYPE	VARIABLE	SI UNIT	GEOMETRIC ENTITY LEVEL	SPACE DIMENSION (COMPONENTS)
Force per unit area	$\mathbf{F}_A$	N/m^2	boundaries	3D (x, y, z) 2D (x, y) 2D axisymmetric (r, z)
Force per unit length	$\mathbf{F}_L$	N/m	boundaries	2D (x, y)

LOAD TYPE	VARIABLE	SI UNIT	GEOMETRIC ENTITY LEVEL	SPACE DIMENSION (COMPONENTS)
Total force	$\mathbf{F}_{tot}$	N	boundaries	3D (x, y, z) 2D (x, y) 2D axisymmetric (r, z)
Pressure	p	Pa	boundaries	3D (x, y, z) 2D (x, y) 2D axisymmetric (r, z)

LOCATION IN USER INTERFACE

Context Menus

Solid Mechanics>Body Load

Ribbon

Physics Tab with **Solid Mechanics** selected:

Boundaries>Solid Mechanics>Body Load

Edge Load

Add an **Edge Load** to 3D components to apply a force distributed along an edge.

FORCE

Select a **Load type** — **Force per unit length** (the default) or **Total force**. Then enter values or expressions for the components in the matrix based on the selection:

- The load per unit length $\mathbf{F}_L$.
- The total force $\mathbf{F}_{tot}$. COMSOL Multiphysics then divides the total force by the volume where the load is active.

After selecting a **Load type**, the **Load** list normally only contains **User defined**. When combining with another physics interface that can provide this type of load, it is also possible to choose a predefined load from this list.

LOCATION IN USER INTERFACE

Context menus

Solid Mechanics>Edges>Edge Load

Ribbon

Physics Tab with **Solid Mechanics** selected:

Edges>Edge Load

Point Load

Add a **Point Load** to points for concentrated forces at points in 2D and 3D.

FORCE

Enter values or expressions for the components of the point load $\mathbf{F}_p$.

	The **Load** list normally only contains **User defined**. When combining with another physics interface that can provide this type of load, it is also possible to choose a predefined load from this list.

LOCATION IN USER INTERFACE

Context Menus

Solid Mechanics>Points>Point Load

Ribbon

Physics Tab with **Solid Mechanics** selected:

Points>Point Load

Point Load (on Axis)

A **Point Load (on Axis)** node can be added to points located at $R = 0$ in axially symmetric models. This is the only true point load an axisymmetric model, since loads applied at points having nonzero radial coordinates actually represent a Ring Load.

FORCE

Enter values or expressions for the **Force** F_z in the axial direction.

LOCATION IN USER INTERFACE

Context Menus

Solid Mechanics>Points>Point Load (on Axis)

Ribbon

Physics Tab with **Solid Mechanics** selected:

Points>Point Load (on Axis)

Periodic Condition

Use a **Periodic Condition** to prescribe that the displacements on two different sets of boundaries with the same geometrical shape are related, as in a periodic structure.

Several different types of periodicity properties of the solution can be prescribed using this boundary condition. The **Continuity**, **Antiperiodicity**, and **User defined** periodic conditions directly prescribe relations between displacements and can be used for any type of study.

The two sets of boundaries between which there is a periodicity condition are called the *source* and *destination* respectively. It is not required to have the same mesh on the source and destination, but the local accuracy of the solution at the boundaries will be better if you use the same mesh.

BOUNDARY SELECTION

Select both the source and destination boundaries.

The software automatically identifies the boundaries as either source boundaries or destination boundaries. This works fine for cases like opposing parallel boundaries. In more general cases, use the **Destination Selection** subnode

to specify the boundaries that constitute the destination. By default this node contains the selection that COMSOL Multiphysics has identified.

In cases where the periodic boundary is split into several boundaries within the geometry, it might be necessary to apply separate periodic conditions to each pair of geometry boundaries for the matching to work properly.

PERIODICITY SETTINGS

With **Type of periodicity** you select the form of periodicity that your solution should have.

- For **Continuity**, the displacements on the destination are set equal to the displacements on the source; $\mathbf{u}(\mathbf{x}_\mathrm{d}) = \mathbf{u}(\mathbf{x}_\mathrm{s})$. If the source and destination boundaries are rotated with respect to each other, a transformation is automatically performed, so that corresponding displacement components are connected.
- For **Antiperiodicity**, the displacements on the destination are set equal to the displacements on the source with the sign reversed; $\mathbf{u}(\mathbf{x}_\mathrm{d}) = -\mathbf{u}(\mathbf{x}_\mathrm{s})$. If the source and destination boundaries are rotated with respect to each other, a transformation is automatically performed, so that corresponding displacement components are connected.
- For **User defined**, select the check box for any of the displacement components as needed. Then for each selection, choose the **Type of periodicity**: **Continuity** or **Antiperiodicity**. Each selected displacement component will be connected by $u_i(\mathbf{x}_\mathrm{d}) = u_i(\mathbf{x}_\mathrm{s})$ or $u_i(\mathbf{x}_\mathrm{d}) = -u_i(\mathbf{x}_\mathrm{s})$ respectively. If the source and destination boundaries are rotated with respect to each other, a transformation is automatically performed, so that corresponding displacement components are connected.

CONSTRAINT SETTINGS

To display this section, click the **Show More Options** button ( ) and select **Advanced Physics Options** in the **Show More Options** dialog box. This section contains settings for specifying the type of constraint and whether to use a pointwise or weak constraint. See Constraint Settings for more information.

ORIENTATION OF SOURCE

To display this section, click the **Show More Options** button ( ) and select **Advanced Physics Options** in the **Show More Options** dialog box. For information about the **Orientation of Source** section, see Orientation of Source and Destination.

LOCATION IN USER INTERFACE

Context Menus

Solid Mechanics>Connections>Periodic Condition

Solid Mechanics>Connections>Periodic Condition>Destination Selection

Ribbon

Physics Tab with **Solid Mechanics** selected:

Boundaries >Connections>Periodic Condition

Physics Tab with **Periodic Condition** node selected in the model tree:

Attributes>Destination Selection

Ring Load

Add a **Ring Load** to points located at $R > 0$ in axially symmetric models. Select this feature from the **Points** submenu.

FORCE

Select the **Load type** — **Load defined force per unit length** (the default) or **Total force.** Enter values or expressions for $\mathbf{F}_{\mathrm{L}}$ or $\mathbf{F}_{\mathrm{tot}}$.

LOCATION IN USER INTERFACE

Context Menus

Solid Mechanics>Points>Ring Load

Ribbon

Physics Tab with **Solid Mechanics** selected:

Points>Ring Load

16

Equation-Based Modeling

This chapter describes the use of the interfaces for mathematics and equation-based modeling, found under the **Mathematics** branch ( ) when adding interfaces. With these interfaces, you can solve various types of PDEs using different formulations. You can also solve ODEs and other global equations as well as create events, create curvilinear coordinates, and use extra dimensions.

The Mathematics Interfaces

The mathematics interfaces are a collection of tools for equation-based modeling and for performing special tasks, rather than for modeling specific physics. These interfaces support several PDE formulations as well as general ways to add ODEs, algebraic equations, other global (space-independent) equations, and curvilinear coordinates.

	For a list of the available interfaces found under **Mathematics** branch ( ) when adding interfaces, including the Names, see Physics Interface Guide.

PDE INTERFACES

The PDE Interfaces branch contains Partial Differential Equation (PDE) interfaces for PDEs in coefficient form and general form, and for weak form PDEs on different geometry levels.

These interfaces are for entering PDEs in different forms:

- *Coefficient form*, for PDEs conforming to the template explained in The Coefficient Form PDE Interfaces.
- *General form*, for conservation laws and PDEs resulting from nonlinear material models. See The General Form PDE Interfaces.
- *Weak form*, to use the weak formulation of the PDE for maximum flexibility. See The Weak Form PDE Interfaces.
- The PDE, Boundary Elements Interface, for source-free PDEs using the boundary element method (BEM).
- About Auxiliary Equation-Based Nodes solves PDEs with first-order derivatives in time and space using optimized algorithms with respect to speed and memory consumption.

Except for the Wave Form PDE, the PDE interfaces are available in domains, on boundaries, on edges, and at points. The interfaces for the different equation forms are identical except for the default node on the top geometric entity level. Also see Modeling with PDEs.

CLASSICAL PDES

The Classical PDE Interfaces branch contains some classical PDEs that are special cases of the Coefficient Form PDE: Laplace Equation, Poisson's Equation, Wave Equation, Heat Equation, Helmholtz Equation, Convection-Diffusion Equation, and Stabilized Convection-Diffusion Equation interfaces.

Also see Compact and Standard Notations for Classical PDEs.

ODE AND DAE INTERFACES

The ODE and DAE Interfaces are used to add global, space-independent equations that can represent additional states. The equations can be ODEs, algebraic equations, DAEs, and transcendental equations, either as global equations or as distributed ODEs/DAEs (on domains, boundaries, edges, or at points). For more information about global equations and ODEs, see Modeling with ODEs and DAEs.

EVENTS INTERFACE

The Events Interface is used to create solver events. An event can be explicit or implicit, and the difference is that for explicit events, you must specify the exact time when the event occurs. When an event occurs, the solver stops and provides a possibility to reinitialize the values of states and dependent variables.

WALL DISTANCE INTERFACE

The Wall Distance Interface solves a modified eikonal equation for computing the distance to walls, which is an important quantity for turbulence modeling in fluid-flow simulations.

CURVILINEAR COORDINATES INTERFACE

Use the Curvilinear Coordinates interface to create a curvilinear coordinate system for defining anisotropic material properties following the shape of a geometry object. Three different methods are available for computing the coordinate system: a diffusion method, an elasticity method, and a flow method. You can also provide user-defined coordinate directions.

Modeling with PDEs

The physics interfaces in COMSOL Multiphysics and add-on modules use *partial differential equations*, PDEs, as a mathematical model of physical reality. You can access these PDEs in the following ways:

- The PDE Interfaces allow you to specify all or part of your problem using PDEs. This approach may, for example, be suitable for modeling unusual equations from various fields of physics, or for learning mathematical modeling.
- Auxiliary equation-based nodes are available in all physics interfaces. These let you add extra equation contributions and constraints to the predefined mathematical model.
- Equation View nodes display the PDEs (in weak form) and constraints underlying the physics interfaces, and allow you to modify them.

This section describes the theory behind the PDE interfaces, but also contains information useful for understanding and modifying the mathematical models implemented in the physics interfaces.

- The PDE Interfaces
- About Auxiliary Equation-Based Nodes
- About Auxiliary Equation-Based Nodes

About Equation Forms

Partial differential equations may be entered into COMSOL Multiphysics on the following formats:

- The General Form PDE
- The Coefficient Form PDE
- The Weak Form PDE
- The PDE, Boundary Elements Interface
- About Auxiliary Equation-Based Nodes

Which one to choose is mostly a matter of convenience: Certain equations are quicker and easier to specify in one particular form. Internally, equations written in general or coefficient form are converted to weak form, which is the most fundamental form. In particular, the weak form is closely linked to the theory behind the *finite element method*, FEM. The PDE, Boundary Elements interface uses the *boundary element method*, BEM, for solving source-free PDEs. In a similar way, the wave form is linked to a *discontinuous Galerkin* version of FEM, particularly suited for solving wave-propagation problems.

Notational Conventions

The PDE interfaces use a slightly different notation, compared to other physics interfaces and the associated documentation. The difference lies in the definition of the symbol ∇, pronounced *nabla* or *del*. For the physics interface equation sections and nodes (see Showing More Options), the ∇ symbol applied to a scalar or vector variable denotes the following coordinate system-independent *gradient*, *divergence*, and *curl* operations:

$$\nabla u = \mathrm{grad}(\mathrm{u})$$
$$\nabla \cdot \mathbf{u} = \mathrm{div}(\mathbf{u})$$
$$\nabla \times \mathbf{u} = \mathrm{curl}(\mathbf{u})$$

In the PDE interfaces, *nabla/del* is interpreted as the vector of partial derivatives:

$$\nabla = \left(\frac{\partial}{\partial x_1}, \ldots, \frac{\partial}{\partial x_n}\right)$$

The spatial coordinates are denoted $x_1, \ldots, x_n$, where n represents the number of space dimensions. When applied to a scalar or vector in a Cartesian coordinate system, this definition leads to an expression that is identical in form to the gradient, divergence, or curl in the same coordinate system. The same does not apply, however, in curvilinear systems such as the one implied in an axisymmetric geometry.

For example, the divergence of a vector $\mathbf{u} = [u_r, u_z]$ in an axisymmetric cylindrical system is

$$\mathrm{div}(\mathbf{u}) = \frac{\partial u_r}{\partial r} + \frac{u_r}{r} + \frac{\partial u_z}{\partial z} = \frac{1}{r}\frac{\partial}{\partial r}(r u_r) + \frac{\partial u_z}{\partial z}$$

while the PDE interface interpretation of *nabla/del* is:

$$\nabla \cdot \mathbf{u} = \frac{\partial u_r}{\partial r} + \frac{\partial u_z}{\partial z}$$

In practice, this means that to correctly implement equations containing the gradient, divergence, or curl in an axisymmetric geometry, you must compensate for the missing factors related to the curvature of the coordinate system. In particular, note that you must typically multiply the entire equation, as well as its boundary conditions, by a volume factor — in an axisymmetric geometry, for example, with a factor r — in order to recast it into one of the equation forms in COMSOL Multiphysics.

The following related examples follow the same principle:

- The symbol Δ is the Laplace operator

$$\frac{\partial^2}{\partial x_1^2} + \ldots + \frac{\partial^2}{\partial x_n^2}$$

- $\nabla \cdot (c\nabla u)$ means

$$\frac{\partial}{\partial x_1}\left(c\frac{\partial u}{\partial x_1}\right) + \ldots + \frac{\partial}{\partial x_n}\left(c\frac{\partial u}{\partial x_n}\right)$$

- $\beta \cdot \nabla u$ means

$$\beta_1\frac{\partial u}{\partial x_1} + \ldots + \beta_n\frac{\partial u}{\partial x_n}$$

where $\beta_1, \ldots, \beta_n$ are the components of the vector β.

	The axisymmetric versions of physics interfaces take the cylindrical coordinate system into account, and no compensation is therefore needed. Also, the Stabilized Convection-Diffusion Equation interface uses a formulation that takes the cylindrical coordinate system into account for axisymmetric models.

	• The PDE Interfaces • About Auxiliary Equation-Based Nodes

PDE Interface Variables

The following list shows symbolic expressions for quantities appearing in the definition of PDEs and the corresponding variable names, which can be used in PDE coefficients and are available for results evaluation and visualization.

EXPRESSION	NAME	DESCRIPTION
u_i	`ui`	The solution variable (dependent variable)
$\frac{\partial u_i}{\partial x_j}$	`uixj`	The derivative of the solution variable u_i with respect to the spatial coordinate x_j, for example, `uy`
$(\nabla_T u_i)_j$	`uiTxj`	The x_j component of the gradient of u_i projected onto a boundary or edge, for example, `uTy`
$\frac{\partial^2 u_i}{\partial x_j \partial x_k}$	`uixjxk`	The second derivative of the solution variable u_i with respect to the spatial coordinates x_j and x_k, for example, `uxx`, `uxy`
$\frac{\partial u_i}{\partial t}$	`uit`	The derivative of the solution variable u_i with respect to time
$\frac{\partial^2 u_i}{\partial t^2}$	`uitt`	The second derivative of the solution variable u_i with respect to time
$\frac{\partial^2 u_i}{\partial x_j \partial t}$	`uixjt`	The mixed derivative of the solution variable u_i with respect to time and the spatial coordinate x_j

The General Form PDE

The General Form PDE interface provides a general interface for specifying and solving PDEs in the general form. This format is closely related to the conservation laws that govern many areas of physics. Assuming that you are working with a single dependent variable u, the general form reads:

$$\begin{cases} e_a \frac{\partial^2 u}{\partial t^2} + d_a \frac{\partial u}{\partial t} + \nabla \cdot \Gamma = f & \text{in } \Omega \\ -\mathbf{n} \cdot \Gamma = g - qu + h^T \mu & \text{on } \partial\Omega \\ 0 = R & \text{on } \partial\Omega_c \\ u = r & \text{on } \partial\Omega_d \end{cases} \tag{16-1}$$

where

- Ω is the computational domain; the union of all domains
- $\partial\Omega$ is the domain boundary
- $\mathbf{n}$ is the outward unit normal vector on $\partial\Omega$

The first line (equation) of Equation 16-1 is the PDE, which must be satisfied in Ω. The second, third, and fourth equations are the boundary conditions, which must hold on $\partial\Omega$. The second equation is a generalization of a *Neumann* boundary condition. The third equation is a general *constraint*, of which the *Dirichlet* boundary condition on the fourth line is a special case.

The terms Γ, f, g, q, R, and r are user-defined coefficients. They can be functions of the spatial coordinates, the solution u, and the space derivatives of u (see PDE Interface Variables), as well as of other predefined and user-defined variables. The coefficients f, g, q, R, and r are scalar, whereas Γ is the *flux vector*.

In practical applications, Γ typically represents the flux of a conserved quantity such as heat, charge, mass, or momentum. This flux is usually related in some empirical way, via a material law, to the gradient of the dependent variable. Therefore, Γ is usually a vector whose components are functions of derivatives of the dependent variable. The flux vector can also contain terms that are proportional to a velocity field when there is convective transport of the conserved quantity present. The structure of Equation 16-1 implies that the normal component of Γ is continuous across any surface in the interior of the domain, Ω.

BOUNDARY CONDITIONS FOR THE GENERAL FORM PDE

In finite element terminology, the boundary condition on the second line of Equation 16-2, corresponding to a Neumann boundary condition, is called a *natural boundary condition*, because it does not occur explicitly in the weak form of the PDE problem. In the PDE interfaces, the corresponding condition is called a *flux* or *source*, because it specifies the value of the numerical flux Γ at the boundary.

Constraints and Dirichlet conditions are also known as *essential boundary conditions* in finite element theory, because they impose a restriction on the trial space, which is not part of the main equation. In the PDE interfaces, a distinction is made between Dirichlet boundary conditions and *constraints*. The general constraint on line 3 of Equation 16-2 specifies that an arbitrary expression is equal to zero on the boundary: $R = 0$. The Dirichlet condition on line 4 of the same equation is a special case directly specifying the value of the dependent variable at the boundary: $u = r$. This makes the constraint a more general boundary condition.

The term $-h^{\mathrm{T}}\mu$ in the generalized Neumann condition is a reaction term enforcing the constraint $R = 0$. When reaction terms are applied symmetrically on all dependent variables,

$$h = -\frac{dR}{du}$$

but other definitions are also possible. The variable μ is a Lagrange multiplier, which is eliminated by the solvers when using standard constraints and therefore does not normally appear explicitly in equations.

	For details about the time-dependent and eigenvalue formulations, see Solving Time-Dependent Problems and Solving Eigenvalue Problems.

	• The General Form PDE Interfaces • Domain, Boundary, Pair, Edge, and Point Conditions for PDEs

The Coefficient Form PDE

The Coefficient Form PDE provides a general interface for specifying and solving many well-known PDEs in the coefficient form.

Many PDEs originating from physics interfaces and other fields can be cast into a generic form containing derivatives up to second order in both time and space but no mixed derivatives. In COMSOL Multiphysics, you can define a PDE of this type by specifying coefficients for the derivatives of different orders. This results in a *coefficient form* PDE, which for one dependent variable u reads:

$$
\begin{cases}
e_a \dfrac{\partial^2 u}{\partial t^2} + d_a \dfrac{\partial u}{\partial t} + \nabla \cdot (-c\nabla u - \alpha u + \gamma) + \beta \cdot \nabla u + a u = f & \text{in } \Omega \\
\mathbf{n} \cdot (c\nabla u + \alpha u - \gamma) = g - q u + h^T \mu & \text{on } \partial\Omega \\
0 = R & \text{on } \partial\Omega_c \\
u = r & \text{on } \partial\Omega_d
\end{cases}
\tag{16-2}
$$

where

- Ω is the computational domain; the union of all domains
- $\partial\Omega$ is the domain boundary
- $\mathbf{n}$ is the outward unit normal vector on $\partial\Omega$

The first line (equation) of Equation 16-2 is the PDE, which must be satisfied in Ω. The second and third equations are the boundary conditions, which must hold on $\partial\Omega$. The second equation is a generalization of a Neumann boundary condition. The third equation is a general constraint, with a Dirichlet boundary condition as a special case. For more information about the boundary conditions, see The General Form PDE.

To define a PDE on coefficient form in one of the PDE interfaces, you specify the coefficients c, α, γ, β, and a and the boundary terms f, g, R, and r. They can all be functions of the spatial coordinates as well as of dependent variables and other predefined or user-defined variables and parameters. A PDE is guaranteed to be *linear* when the coefficients vary only with the spatial coordinates (or are constants). A PDE is *nonlinear* if the c, α, β, a, h, or q coefficients depend on u or its derivatives (for example, the components of ∇u), or if γ, f, g, R, or r are nonlinear in u.

For a single dependent variable u, all the coefficients in the above equation are scalars except α, β, and γ, which are vectors with n components. The coefficient c may be given alternatively as a scalar or an n-by-n matrix to model anisotropic materials. When the coefficient form is used for modeling a system of equations, the coefficients are extended with additional vector and matrix dimensions referring to the dependent variable index. See further Multiple Dependent Variables — Equation Systems.

COEFFICIENT FORM VERSUS GENERAL FORM

Comparing Equation 16-2 to Equation 16-1 shows that the coefficient form is just a special case of the general form. Applying the following substitutions in the general form, Equation 16-1, turns it into the coefficient form:

$$
\begin{aligned}
\Gamma &= -c\nabla u - \alpha u + \gamma \\
F &= f - \beta \nabla u - a u
\end{aligned}
\tag{16-3}
$$

This duality lets you choose the representation in which it is easiest to implement a particular PDE. There is no difference in performance.

INTERPRETING PDE COEFFICIENTS

The PDE formulations in COMSOL Multiphysics can model a variety of problems, but this guide, as well as the interface, uses descriptive names for the coefficients that fall within the realm of continuum mechanics and mass transfer. For the coefficient form PDE:

- e_a is the mass coefficient.
- d_a is a damping coefficient or mass coefficient.
- c is the diffusion coefficient.

- α is the conservative flux convection coefficient.
- β is the convection coefficient.
- a is the absorption coefficient.
- γ is the conservative flux source term.
- f is the source term.

$$\underbrace{e_a\frac{\partial^2 u}{\partial t^2}}_{\text{Mass}} + \underbrace{d_a\frac{\partial u}{\partial t}}_{\text{Damping/ Mass}} - \underbrace{\nabla\cdot(\underbrace{c\nabla u}_{\text{Diffusion}} + \underbrace{\alpha u}_{\text{Convection}} - \underbrace{\gamma}_{\text{Source}})}_{\text{Conservative Flux}} + \underbrace{\beta\cdot\nabla u}_{\text{Convection}} + \underbrace{au}_{\text{Absorption}} = \underbrace{f}_{\text{Source}}$$

For the Neumann boundary condition of the coefficient form

$$\mathbf{n}\cdot(c\nabla u + \alpha u - \gamma) = g - qu + h^T\mu$$

- g is the boundary source term.
- q is the boundary absorption coefficient.

	There are many interesting PDE problems to which these interpretations do not apply. For example, a time-harmonic PDE such as the Helmholtz equation represents a time-dependent phenomenon transformed into the frequency domain, making the a coefficient a mass rather than absorption term.

COMPACT AND STANDARD NOTATIONS FOR CLASSICAL PDES

Many classical PDEs are instances of the coefficient form PDE. The classical PDEs have their own interfaces, which are found under the **Mathematics>Classical PDEs** branch (∇^2) when adding an interface. Table 16-1 shows the available classical PDEs using two notations: the compact notation of vector analysis (used in this documentation) and an expanded component notation.

TABLE 16-1: CLASSICAL PDES IN COMPACT AND COMPONENT NOTATION

EQUATION	COMPACT NOTATION	COMPONENT NOTATION (2D)
Laplace's equation	$-\nabla\cdot(\nabla u) = 0$	$-\frac{\partial}{\partial x}\frac{\partial u}{\partial x} - \frac{\partial}{\partial y}\frac{\partial u}{\partial y} = 0$
Poisson's equation	$-\nabla\cdot(c\nabla u) = f$	$-\frac{\partial}{\partial x}\left(c\frac{\partial u}{\partial x}\right) - \frac{\partial}{\partial y}\left(c\frac{\partial u}{\partial y}\right) = f$
Helmholtz equation	$-\nabla\cdot(c\nabla u) + au = f$	$-\frac{\partial}{\partial x}\left(c\frac{\partial u}{\partial x}\right) - \frac{\partial}{\partial y}\left(c\frac{\partial u}{\partial y}\right) + au = f$
Heat equation	$d_a\frac{\partial u}{\partial t} - \nabla\cdot(c\nabla u) = f$	$d_a\frac{\partial u}{\partial t} - \frac{\partial}{\partial x}\left(c\frac{\partial u}{\partial x}\right) - \frac{\partial}{\partial y}\left(c\frac{\partial u}{\partial y}\right) = f$

TABLE 16-1: CLASSICAL PDES IN COMPACT AND COMPONENT NOTATION

EQUATION	COMPACT NOTATION	COMPONENT NOTATION (2D)
Wave equation	$e_a\frac{\partial^2 u}{\partial t^2}-\nabla\cdot(c\nabla u) = f$	$e_a\frac{\partial^2 u}{\partial t^2}-\frac{\partial}{\partial x}\left(c\frac{\partial u}{\partial x}\right)-\frac{\partial}{\partial y}\left(c\frac{\partial u}{\partial y}\right) = f$
Convection-diffusion equation	$d_a\frac{\partial u}{\partial t}-\nabla\cdot(c\nabla u)+\beta\cdot\nabla u = f$	$d_a\frac{\partial u}{\partial t}-\frac{\partial}{\partial x}\left(c\frac{\partial u}{\partial x}\right)-\frac{\partial}{\partial y}\left(c\frac{\partial u}{\partial y}\right)$ $+\beta_x\frac{\partial u}{\partial x}+\beta_y\frac{\partial u}{\partial y} = f$

The default values are 1 for f and c and -1 for a, so the default Helmholtz equation, for example, is $-\Delta u - u = 1$.

- Multiple Dependent Variables — Equation Systems
- The Coefficient Form PDE Interfaces
- The PDE Interfaces
- The Classical PDE Interfaces
- Domain, Boundary, Pair, Edge, and Point Conditions for PDEs
- Modeling Anisotropic Materials

Multiple Dependent Variables — Equation Systems

All PDE interfaces and equation forms support multiple dependent variables — that is, a system of PDEs, which can be coupled.

THE GENERAL FORM PDE SYSTEM

In the case of several dependent variables $u_1, u_2, \ldots, u_N$, a general form system of equations takes the following form:

$$\begin{cases} e_a^{lk}\frac{\partial^2 u_k}{\partial t^2}+d_a^{lk}\frac{\partial u_k}{\partial t}+\nabla\cdot\Gamma_l = F_l & \text{in } \Omega \\ -\mathbf{n}\cdot\Gamma_l = G_l + h_{ml}\mu_m & \text{on } \partial\Omega \\ 0 = R_m & \text{on } \partial\Omega_c \\ u_n = r_n & \text{on } \partial\Omega_d \end{cases} \tag{16-4}$$

The equation index l and k ranges from 1 to N, while the general constraint index m ranges from 1 to M_c and the Dirichlet condition index n ranges from 1 to M_d. The total number of constraints is therefore $M = M_c + M_d$. This discussion uses the summation convention. F_l, G_l, R_m, and r_n are scalars, whereas Γ_l is a spatial vector. The mass and damping coefficients e_a and d_a are N-by-N matrices, while the constraint force Jacobian h is an M-by-N matrix. Note that there are several Lagrange multipliers: $\mu_1, \mu_2, \ldots, \mu_M$.

For a more compact form, let $\mathbf{u}$ be a vector with components u_k, let Γ be a matrix with components Γ_{lj}, and so on. Then the system of equations takes on the same form as given in Equation 16-1 for a single dependent variable.

It is also possible to write the system entirely on component form, where Γ_{lj} are components of the vector Γ_l, and n_j components of the normal vector $\mathbf{n}$. Then the system of equations becomes:

$$\begin{cases} e_a^{lk}\dfrac{\partial^2 u_k}{\partial t^2} + d_a^{lk}\dfrac{\partial u_k}{\partial t} + \dfrac{\partial}{\partial x_j}(\Gamma_{lj}) = F_l & \text{in } \Omega \\ -n_j\Gamma_{lj} = G_l + h_{ml}\mu_m & \text{on } \partial\Omega \\ 0 = R_m & \text{on } \partial\Omega_c \\ u_n = r_n & \text{on } \partial\Omega_d \end{cases}$$

System for Two Variables in the General Form

The following example of a PDE in the general form is a stationary system for $N = 2$ solution components in $n = 2$ space dimensions with $M = 2$ constraints:

$$\begin{cases} \nabla \cdot \Gamma_1 = F_1 & \text{in } \Omega \\ \nabla \cdot \Gamma_2 = F_2 & \text{in } \Omega \end{cases}$$

with the generalized Neumann boundary conditions

$$\begin{cases} -\mathbf{n} \cdot \Gamma_1 = G_1 + \dfrac{\partial R_1}{\partial u_1}\mu_1 + \dfrac{\partial R_2}{\partial u_1}\mu_2 & \text{on } \partial\Omega \\ -\mathbf{n} \cdot \Gamma_2 = G_2 + \dfrac{\partial R_1}{\partial u_2}\mu_1 + \dfrac{\partial R_2}{\partial u_2}\mu_2 & \text{on } \partial\Omega \end{cases}$$

and the Dirichlet boundary conditions

$$\begin{cases} 0 = R_1 & \text{on } \partial\Omega \\ 0 = R_2 & \text{on } \partial\Omega \end{cases}$$

- The General Form PDE
- The General Form PDE Interfaces
- Boundary Condition Types

THE COEFFICIENT FORM EQUATION SYSTEM

The coefficient form of an equation system with N dependent variables $u_1, u_2, \ldots, u_N$ can be easily obtained from the general form PDE shown in Equation 16-4 using the substitutions:

$$\begin{cases} \Gamma_{lj} = -c^{lkji}\dfrac{\partial u_k}{\partial x_i} - \alpha^{lkj}u_k + \gamma^{lj} \\ F_l = f_l - \beta^{lki}\dfrac{\partial u_k}{\partial x_i} - a^{lk}u_k \end{cases}$$

Where index k and l run over dependent variables form 1 to N, while index i and j run over space dimensions from 1 to K. This means that for the case of a system of equations with N dependent variables in K space dimensions, the coefficients have the following sizes:

- e_a is an N-by-N matrix
- d_a is an N-by-N matrix
- c is an N-by-N-by-K-by-K four-dimensional array
- α is an N-by-N-by-K three-dimensional array
- β is an N-by-N-by-K three-dimensional array
- a is an N-by-N matrix
- f is an N-vector
- g is an N-vector
- q is an N-by-N matrix

System for Two Variables in the Coefficient Form

With two dependent variables u_1 and u_2, the stationary PDE problem in coefficient form results in the following equation system:

$$e_a\frac{\partial^2 u}{\partial t^2} + d_a\frac{\partial u}{\partial t} - \nabla \cdot (c\nabla u + \alpha u - \gamma) + \beta \cdot \nabla u + au = f$$

where $u = (u_1, u_2)$. The mass term is defined as

$$e_a\frac{\partial^2 u}{\partial t^2} = \begin{bmatrix} e_{a11} & e_{a12} \\ e_{a21} & e_{a22} \end{bmatrix} \begin{bmatrix} \dfrac{\partial^2 u_1}{\partial t^2} \\ \dfrac{\partial^2 u_2}{\partial t^2} \end{bmatrix} = \begin{bmatrix} e_{a11}\dfrac{\partial^2 u_1}{\partial t^2} + e_{a12}\dfrac{\partial^2 u_2}{\partial t^2} \\ e_{a21}\dfrac{\partial^2 u_1}{\partial t^2} + e_{a22}\dfrac{\partial^2 u_2}{\partial t^2} \end{bmatrix}$$

Similarly, the damping term is

$$d_a\frac{\partial u}{\partial t} = \begin{bmatrix} d_{a11} & d_{a12} \\ d_{a21} & d_{a22} \end{bmatrix} \begin{bmatrix} \dfrac{\partial u_1}{\partial t} \\ \dfrac{\partial u_2}{\partial t} \end{bmatrix} = \begin{bmatrix} d_{a11}\dfrac{\partial u_1}{\partial t} + d_{a12}\dfrac{\partial u_2}{\partial t} \\ d_{a21}\dfrac{\partial u_1}{\partial t} + d_{a22}\dfrac{\partial u_2}{\partial t} \end{bmatrix}$$

However, if $e_a = 0$, then d_a is often called the mass coefficient.

The diffusive flux is defined as

$$c\nabla u = \begin{bmatrix} c_{11} & c_{12} \\ c_{21} & c_{22} \end{bmatrix} \nabla \begin{bmatrix} u_1 \\ u_2 \end{bmatrix} = \begin{bmatrix} c_{11} & c_{12} \\ c_{21} & c_{22} \end{bmatrix} \begin{bmatrix} \nabla u_1 \\ \nabla u_2 \end{bmatrix} = \begin{bmatrix} c_{11}\nabla u_1 + c_{12}\nabla u_2 \\ c_{21}\nabla u_1 + c_{22}\nabla u_2 \end{bmatrix}$$

$$= \begin{bmatrix} c_{11}\begin{bmatrix} \frac{\partial u_1}{\partial x} \\ \frac{\partial u_1}{\partial y} \end{bmatrix} + c_{12}\begin{bmatrix} \frac{\partial u_2}{\partial x} \\ \frac{\partial u_2}{\partial y} \end{bmatrix} \\ c_{21}\begin{bmatrix} \frac{\partial u_1}{\partial x} \\ \frac{\partial u_1}{\partial y} \end{bmatrix} + c_{22}\begin{bmatrix} \frac{\partial u_2}{\partial x} \\ \frac{\partial u_2}{\partial y} \end{bmatrix} \end{bmatrix} = \begin{bmatrix} \begin{bmatrix} c_{11}\frac{\partial u_1}{\partial x} + c_{12}\frac{\partial u_2}{\partial x} \\ c_{11}\frac{\partial u_1}{\partial y} + c_{12}\frac{\partial u_2}{\partial y} \end{bmatrix} \\ \begin{bmatrix} c_{21}\frac{\partial u_1}{\partial x} + c_{22}\frac{\partial u_2}{\partial x} \\ c_{21}\frac{\partial u_1}{\partial y} + c_{22}\frac{\partial u_2}{\partial y} \end{bmatrix} \end{bmatrix} = \begin{bmatrix} \begin{bmatrix} \mathtt{cu1x} \\ \mathtt{cu1y} \end{bmatrix} \\ \begin{bmatrix} \mathtt{cu2x} \\ \mathtt{cu2y} \end{bmatrix} \end{bmatrix}$$

where ∇u_1 and ∇u_2 are column vectors. The flux matrix or flux tensor is a column vector in this presentation. For anisotropic materials, the components c_{11}, c_{12}, c_{21}, and c_{22} can be matrices as described above for the one-variable coefficient form PDE. In this case, the diffusive flux reads

$$c\nabla u = \begin{bmatrix} c_{11} & c_{12} \\ c_{21} & c_{22} \end{bmatrix} \begin{bmatrix} \nabla u_1 \\ \nabla u_2 \end{bmatrix} = \begin{bmatrix} \begin{bmatrix} c_{1111} & c_{1112} \\ c_{1121} & c_{1122} \end{bmatrix} & \begin{bmatrix} c_{1211} & c_{1212} \\ c_{1221} & c_{1222} \end{bmatrix} \\ \begin{bmatrix} c_{2111} & c_{2112} \\ c_{2121} & c_{2122} \end{bmatrix} & \begin{bmatrix} c_{2211} & c_{2212} \\ c_{2221} & c_{2222} \end{bmatrix} \end{bmatrix} \begin{bmatrix} \nabla u_1 \\ \nabla u_2 \end{bmatrix}$$

$$= \begin{bmatrix} \begin{bmatrix} c_{1111} & c_{1112} \\ c_{1121} & c_{1122} \end{bmatrix} \nabla u_1 + \begin{bmatrix} c_{1211} & c_{1212} \\ c_{1221} & c_{1222} \end{bmatrix} \nabla u_2 \\ \begin{bmatrix} c_{2111} & c_{2112} \\ c_{2121} & c_{2122} \end{bmatrix} \nabla u_1 + \begin{bmatrix} c_{2211} & c_{2212} \\ c_{2221} & c_{2222} \end{bmatrix} \nabla u_2 \end{bmatrix}$$

The conservative convective flux is defined as

$$\alpha u = \alpha \begin{bmatrix} u_1 \\ u_2 \end{bmatrix} = \begin{bmatrix} \alpha_{11} & \alpha_{12} \\ \alpha_{21} & \alpha_{22} \end{bmatrix} \begin{bmatrix} u_1 \\ u_2 \end{bmatrix} = \begin{bmatrix} \begin{bmatrix} \alpha_{111} \\ \alpha_{112} \end{bmatrix} & \begin{bmatrix} \alpha_{121} \\ \alpha_{122} \end{bmatrix} \\ \begin{bmatrix} \alpha_{211} \\ \alpha_{212} \end{bmatrix} & \begin{bmatrix} \alpha_{221} \\ \alpha_{222} \end{bmatrix} \end{bmatrix} \begin{bmatrix} u_1 \\ u_2 \end{bmatrix} = \begin{bmatrix} \begin{bmatrix} \alpha_{111} \\ \alpha_{112} \end{bmatrix} u_1 + \begin{bmatrix} \alpha_{121} \\ \alpha_{122} \end{bmatrix} u_2 \\ \begin{bmatrix} \alpha_{211} \\ \alpha_{212} \end{bmatrix} u_1 + \begin{bmatrix} \alpha_{221} \\ \alpha_{222} \end{bmatrix} u_2 \end{bmatrix}$$

Here the third index, k, of α_{ijk} corresponds to the space coordinate suffixes `x` and `y`.

The conservative flux source is defined as

$$\gamma = \begin{bmatrix} \begin{bmatrix} \gamma_{11} \\ \gamma_{12} \end{bmatrix} \\ \begin{bmatrix} \gamma_{21} \\ \gamma_{22} \end{bmatrix} \end{bmatrix}$$

Here the second index, j, of γ_{ij} denotes the space coordinate suffixes for `x` and `y`.

For the flux terms the divergence operator works on each row separately. To illustrate this, consider the divergence of the conservative flux source

$$\nabla \cdot \gamma = \nabla \cdot \begin{bmatrix} \begin{bmatrix} \gamma_{11} \\ \gamma_{12} \end{bmatrix} \\ \begin{bmatrix} \gamma_{21} \\ \gamma_{22} \end{bmatrix} \end{bmatrix} = \begin{bmatrix} \nabla \cdot \begin{bmatrix} \gamma_{11} \\ \gamma_{12} \end{bmatrix} \\ \nabla \cdot \begin{bmatrix} \gamma_{21} \\ \gamma_{22} \end{bmatrix} \end{bmatrix}$$

The convection term is defined as

$$\beta \cdot \nabla u = \begin{bmatrix} \beta_{11} & \beta_{12} \\ \beta_{21} & \beta_{22} \end{bmatrix} \cdot \begin{bmatrix} \nabla u_1 \\ \nabla u_2 \end{bmatrix} = \begin{bmatrix} \begin{bmatrix} \beta_{111} \\ \beta_{112} \end{bmatrix} & \begin{bmatrix} \beta_{121} \\ \beta_{122} \end{bmatrix} \\ \begin{bmatrix} \beta_{211} \\ \beta_{212} \end{bmatrix} & \begin{bmatrix} \beta_{221} \\ \beta_{222} \end{bmatrix} \end{bmatrix} \cdot \begin{bmatrix} \nabla u_1 \\ \nabla u_2 \end{bmatrix} = \begin{bmatrix} \begin{bmatrix} \beta_{111} \\ \beta_{112} \end{bmatrix} \cdot \nabla u_1 + \begin{bmatrix} \beta_{121} \\ \beta_{122} \end{bmatrix} \cdot \nabla u_2 \\ \begin{bmatrix} \beta_{211} \\ \beta_{212} \end{bmatrix} \cdot \nabla u_1 + \begin{bmatrix} \beta_{221} \\ \beta_{222} \end{bmatrix} \cdot \nabla u_2 \end{bmatrix}$$

The variable names for these components are `beu1` and `beu2`.

The absorption term is defined as

$$au = \begin{bmatrix} a_{11} & a_{12} \\ a_{21} & a_{22} \end{bmatrix} \begin{bmatrix} u_1 \\ u_2 \end{bmatrix} = \begin{bmatrix} a_{11}u_1 + a_{12}u_2 \\ a_{21}u_1 + a_{22}u_2 \end{bmatrix}$$

The variable names for these components are `au1` and `au2`.

The source term is defined as

$$f = \begin{bmatrix} f_1 \\ f_2 \end{bmatrix}$$

The variable names for these components are `f1` and `f2`.

The Boundary Condition Terms

The Dirichlet boundary condition, in expanded form, reads

$$\begin{bmatrix} h_{11} & h_{12} \\ h_{21} & h_{22} \end{bmatrix} \begin{bmatrix} u_1 \\ u_2 \end{bmatrix} = \begin{bmatrix} r_1 \\ r_2 \end{bmatrix}$$

If you choose the Dirichlet condition, you also get the generalized Neumann boundary condition, which reads

$$\mathbf{n} \cdot (c\nabla u + \alpha u - \gamma) + qu = g - h^T \mu$$

The normal vector $\mathbf{n} = (n_x, n_y)$ operates on the flux vector in the same way as the divergence operator as explained earlier. If h has full rank (as in the default identity matrix, for example) only the constraints from the Dirichlet condition are active.

If you choose the Neumann condition, you get only the boundary condition

$$\mathbf{n} \cdot (c\nabla u + \alpha u - \gamma) + qu = g$$

The normal component of the diffusive flux is defined as

$$\mathbf{n} \cdot c\nabla u = \mathbf{n} \cdot \begin{bmatrix} c_{11} & c_{12} \\ c_{21} & c_{22} \end{bmatrix} \begin{bmatrix} \nabla u_1 \\ \nabla u_2 \end{bmatrix} = \begin{bmatrix} \mathbf{n} \cdot (c_{11}\nabla u_1 + c_{12}\nabla u_2) \\ \mathbf{n} \cdot (c_{21}\nabla u_1 + c_{22}\nabla u_2) \end{bmatrix}$$

The normal component of the conservative convective flux is defined as

$$\mathbf{n} \cdot \alpha u = \mathbf{n} \cdot \begin{bmatrix} \begin{bmatrix} \alpha_{111} \\ \alpha_{112} \end{bmatrix} u_1 + \begin{bmatrix} \alpha_{121} \\ \alpha_{122} \end{bmatrix} u_2 \\ \begin{bmatrix} \alpha_{211} \\ \alpha_{212} \end{bmatrix} u_1 + \begin{bmatrix} \alpha_{221} \\ \alpha_{222} \end{bmatrix} u_2 \end{bmatrix} = \begin{bmatrix} (n_x, n_y) \cdot \left(\begin{bmatrix} \alpha_{111} \\ \alpha_{112} \end{bmatrix} u_1 + \begin{bmatrix} \alpha_{121} \\ \alpha_{122} \end{bmatrix} u_2 \right) \\ (n_x, n_y) \cdot \left(\begin{bmatrix} \alpha_{211} \\ \alpha_{212} \end{bmatrix} u_1 + \begin{bmatrix} \alpha_{221} \\ \alpha_{222} \end{bmatrix} u_2 \right) \end{bmatrix}$$

The normal component of the conservative flux source is defined as

$$\mathbf{n} \cdot \gamma = (n_x, n_y) \cdot \begin{bmatrix} \begin{bmatrix} \gamma_{11} \\ \gamma_{12} \end{bmatrix} \\ \begin{bmatrix} \gamma_{21} \\ \gamma_{22} \end{bmatrix} \end{bmatrix} = \begin{bmatrix} (n_x, n_y) \cdot \begin{bmatrix} \gamma_{11} \\ \gamma_{12} \end{bmatrix} \\ (n_x, n_y) \cdot \begin{bmatrix} \gamma_{21} \\ \gamma_{22} \end{bmatrix} \end{bmatrix}$$

The boundary absorption term is defined as

$$qu = \begin{bmatrix} q_{11} & q_{12} \\ q_{21} & q_{22} \end{bmatrix} \begin{bmatrix} u_1 \\ u_2 \end{bmatrix} = \begin{bmatrix} q_{11}u_1 + q_{12}u_2 \\ q_{21}u_1 + q_{22}u_2 \end{bmatrix}$$

The boundary source term is defined as

$$g = \begin{bmatrix} g_1 \\ g_2 \end{bmatrix}$$

- The Coefficient Form PDE
- The Coefficient Form PDE Interfaces
- Boundary Condition Types

Solving Time-Dependent Problems

The general form equation shown in Equation 16-1, as well as the coefficient form equation in Equation 16-2, contain time-derivative terms of the same form. These terms only take effect for Time Dependent, Eigenvalue, and Eigenfrequency study steps, and derived versions of these. When solving a Stationary, Frequency Domain, or similar study step, the solvers assume that all time derivatives are zero, so the values of the e_a and d_a coefficients do not matter.

To activate the d_a and e_a coefficients and convert the model into a time-dependent model, select a Time Dependent study.

When solving a Time Dependent study step, the *mass coefficient*, e_a, becomes important. The name mass coefficient, or *mass matrix* in case of a system of equations, stems from the fact that in many physics applications, e_a contains the mass density. The d_a coefficient in such equations usually represents damping of wave-like phenomena. However, if $e_a = 0$, then d_a is often called the mass coefficient instead. The default settings are $e_a = 0$ and $d_a = 1$, representing a parabolic time-dependent PDE such as the heat equation. Using $e_a = 1$ and $d_a = 0$ represents an undamped wave equation.

When solving a Time Dependent study step, the time variable is called `t` and can be used anywhere in equation coefficients. For other study steps, `t` is undefined. If you want to solve a model that depends explicitly on time using a Stationary study, you must first define a model parameter called `t` and give it a suitable value.

If, for a system of equations, the e_a matrix is nonzero and singular, or if $e_a = 0$ and d_a is singular, the system becomes a *differential-algebraic equation* (DAE) system. The COMSOL Multiphysics solvers for time-dependent problems handle DAEs.

Time-Dependent Solver

USING MIXED SPACE-TIME DERIVATIVES

The coefficient forms in equation Equation 16-2 only contain coefficients for pure space and time derivatives up to second order. The only directly available time-derivative coefficients are therefore e_a and d_a, using the subscript a because they are similar to the a coefficient in the absorption term, except that they multiply $\partial^2 u/\partial t^2$ and $\partial u/\partial t$ instead of u. In analogy, it is possible to define coefficients e_c, $\mathbf{e}_\alpha$, $\mathbf{e}_\beta$ and d_c, $\mathbf{d}_\alpha$, $\mathbf{d}_\beta$ for mixed space-time derivatives, such that the equation becomes instead

$$e_a\frac{\partial^2 u}{\partial t^2} + \nabla\cdot\left(-e_c\nabla\frac{d^2 u}{dt^2} - \mathbf{e}_\alpha\frac{d^2 u}{dt^2}\right) + \mathbf{e}_\beta\cdot\nabla\frac{d^2 u}{dt^2} +$$
$$d_a\frac{\partial u}{\partial t} + \nabla\cdot\left(-d_c\nabla\frac{\partial u}{\partial t} - \mathbf{d}_\alpha\frac{\partial u}{\partial t}\right) + \mathbf{d}_\beta\cdot\nabla\frac{\partial u}{\partial t} + \nabla\cdot(-c\nabla u + \ldots) = \ldots$$

These mixed coefficients are not directly available in the general or coefficient form PDE models. Instead, enter them in the existing γ and f terms:

In 1D, add `-d_c*uxt-d_al*ut` to the γ term, and add `-d_be*uxt` to the f term, and similarly for second-order derivatives.

In 2D, add `-d_c*uxt-d_al1*ut` to the first γ component, and add `-d_c*uyt-d_al2*ut` to the second γ component. Add `-d_be1*uxt-d_be2*uyt` to the f term, and similarly for second-order derivatives.

USING TIME DERIVATIVES IN BOUNDARY CONDITIONS

To specify a flux or source boundary condition containing time-derivative terms as in

$$\mathbf{n}\cdot(c\nabla u + \ldots) = g - e_q\frac{\partial^2 u}{\partial t^2} - d_q\frac{\partial u}{\partial t} - qu + h^T\mu\,,$$

simply add the terms `-e_q*utt-d_q*ut` to the g term, and provide appropriate values or expressions for the coefficients e_q and d_q in, for example, a Global Equations Settings window.

!	Constraints and Dirichlet boundary conditions must not contain time derivatives like `ut` and `utt` in the R and r coefficients unless they are enforced weakly, using weak constraints. See Boundary Conditions.

Solving Eigenvalue Problems

THE EIGENVALUE PDE

When solving a PDE using an Eigenvalue study step, COMSOL Multiphysics assumes that all dependent variables vary with time as $u(t) = \hat{u}e^{-\lambda t}$, where $\hat{u}$ is a complex amplitude field. Therefore the time derivatives in Equation 16-1 and Equation 16-2 are interpreted as

$$\frac{\partial u}{\partial t} = -\lambda \hat{u}$$
$$\frac{\partial^2 u}{\partial t^2} = \lambda^2 \hat{u}$$

which, for example, leads to the general form eigenvalue PDE

$$\begin{cases} \lambda^2 \hat{u} - \lambda \hat{u} + \nabla \cdot \Gamma = f & \text{in}\,\Omega \\ -\mathbf{n} \cdot \Gamma = g - q\hat{u} + h^T \hat{\mu} & \text{on } \partial\Omega \\ 0 = R & \text{on } \partial\Omega_c \\ \hat{u} = r & \text{on } \partial\Omega_d \end{cases}$$

The eigenvalue solver further ignores any source or flux terms that are independent of the dependent variables.

BOUNDARY CONDITIONS IN EIGENVALUE PROBLEMS

Boundary conditions are treated as homogeneous for eigenvalue and eigenfrequency studies. It means, for example, that when using a Dirichlet boundary condition such as $u = 7$, it is treated as $u = 0$ when you use eigenvalue or eigenfrequency study steps. For nonlinear problems, the eigenvalue solver is linearizing the problem, including the constraints, around a linearization point for the dependent variables and a eigenvalue linearization point. For a nonlinear constraint (for u),

$$f(u) = 0$$

the constraint

$$f_u(u_0) \cdot u = 0$$

is used when you run eigenvalue or eigenfrequency study steps. The eigenvalue itself is not supported in constraints.

THE EIGENVALUES AND THE LAMBDA VARIABLE

As an alternative to defining eigenvalue PDEs using the time-derivative coefficients e_a and d_a, you can write the eigenvalue explicitly in the equations using the variable name `lambda`. For example, instead of specifying $e_a = 1$,

you can set a = `lambda^2` with exactly the same result. In many cases, this formulation is preferable, in particular when the eigenvalue problem does not arise from a time derivative in a time-harmonic assumption.

	After solving an eigenvalue problem, the eigenvalue is always available for postprocessing under the variable name `lambda`, independently of whether the problem has been specified using the e_a and d_a coefficients or using the variable `lambda`.

	Eigenfrequency studies are exactly analogous to Eigenvalue studies except that they also define the variable `freq` using the definition `freq` = $i\lambda/(2\pi)$. The variable name `freq` may be used in equations and postprocessing in the same way as `lambda`.

The eigenvalue solvers solve eigenvalue problems that are at most quadratic polynomials in the eigenvalue `lambda` exactly in one step. Therefore, damped eigenvalue solutions are easily found when both e_a and d_a are nonzero. Using the variable `lambda`, more complicated eigenvalue problems can be specified. Such problems must be solved using an iterative procedure.

Each time you run the eigenvalue solver, the PDE is expanded in a Taylor series in `lambda` around the eigenvalue linearization point λ_0. Only the linear and quadratic terms are retained, while higher order terms are dropped. Running the solver repeatedly, updating the eigenvalue linearization point to the last eigenvalue found, usually converges to an eigenvalue solving the full nonlinear eigenvalue problem.

	Eigenvalue Solver and Eigenvalue.

About Weak Form Modeling

Do not be misled by the term "weak"; the weak form is very powerful and flexible. The term *weak form* is borrowed from mathematics, but in this context it has a slightly different meaning; this implementation incorporates capabilities in addition to those defined in the mathematical weak form. Moreover, knowledge of the mathematical weak form is not a prerequisite to using the COMSOL Multiphysics implementation.

The distinguishing characteristics of the weak form in COMSOL Multiphysics are that it makes it possible to:

- Enter certain equations that can be derived from an energy principle in a very compact and convenient form. Such equations, for example, arise in structural mechanics.
- Add and modify nonstandard constraints, such as various contact and friction models.
- Build models with extra equations on boundaries, edges, and points.
- Use the *test operator* to conveniently work with problems in variational calculus and parametric optimization. For more information about the test operator and other operators, see Operators, Functions, and Constants.

All physics interfaces are implemented as weak form equations, which you can study and modify in the Equation View nodes. COMSOL Multiphysics also converts all equation-based models specified in The Coefficient Form PDE Interfaces and The General Form PDE Interfaces to the weak form before solving.

In addition, it is possible in COMSOL Multiphysics to add extra weak form contributions and auxiliary variables to any physics interface in the model.

- Physics Nodes — Equation Section and Equation View
- About Auxiliary Equation-Based Nodes
- The Weak Form PDE Interfaces and Weak Form PDE

Introduction to the Weak Form

The general form and coefficient form PDEs in equations Equation 16-1 and Equation 16-2 specify PDEs in a *strong form*, in the sense that they, in principle, require the PDE to be satisfied at every point in the geometry. And for this to be possible, all terms must be sufficiently continuous for derivatives and well-defined pointwise values to exist. In many cases, the natural phenomena a PDE intends to model are best described as discontinuous and may also contain source terms that are only defined as a total over a small region, without a well-defined pointwise value.

In these situations, a weak equation turns out to be a better model of physics than can be provided by the more commonly used strong form PDEs. In addition, the weak form is particularly suitable for discretization and numerical solution using the finite element method. One reason for this is precisely the lower continuity requirement on the solution, which only needs to be sufficiently smooth on each mesh element separately.

EXAMPLE: CONVERSION FROM GENERAL FORM TO WEAK FORM

As an example, consider the general form presented in Equation 16-1, in particular the stationary form of the domain equation:

$$\nabla \cdot \Gamma = f$$

Assuming a single dependent variable u, introduce a corresponding arbitrary *test function* υ. Multiply the equation by this test function and integrate over the domain:

$$\int_{\Omega} \upsilon \nabla \cdot \Gamma dV = \int_{\Omega} \upsilon f dV \tag{16-5}$$

This integral equation is clearly a weaker statement than the original equation, in particular when Equation 16-5 is required to hold only for all test functions υ from a limited class of functions. In the finite element method, the test functions υ (and also solution u) are usually limited to the set of piecewise polynomials of a given order on each mesh element.

This polynomial can also be written as a sum of individual *shape functions*. Therefore, the original strong form PDE is transformed into a weak form equation, which must only be satisfied in a local integral sense over each shape function. When you increase the number of shape functions by refining the mesh or increasing the polynomial order, you simultaneously decrease the space of solutions u that can possibly satisfy Equation 16-5. Therefore, well-posed and consistent finite element formulations converge toward the single solution u that satisfies the original strong form PDE.

To further simplify the solution of Equation 16-5, the left-hand side integral can be integrated by parts, using Gauss law:

$$-\int_{\Omega} \nabla \upsilon \cdot \Gamma dV + \int_{\delta\Omega} \upsilon \mathbf{n} \cdot \Gamma dA = \int_{\Omega} \upsilon f dV \tag{16-6}$$

This has two main advantages. First of all, it reduces the maximum order of spatial derivatives. If Γ is a function of the gradient of u, for example $\Gamma = -c\nabla u - \alpha u + \gamma$ as in the coefficient form PDE, the transformed weak equation now

contains only first-order derivatives compared to second-order derivatives in the original strong form PDE. Secondly, it makes it clear what the *natural boundary condition* is for this equation. The second integral on the left-hand side disappears if the normal component of Γ vanishes on the boundary. Alternately, if the value of the normal component is known, for example such that

$$-\mathbf{n} \cdot \Gamma = g - qu + h^T \mu \tag{16-7}$$

on δΩ, this value can be inserted as a boundary condition into the weak form equation, which then becomes

$$-\int_{\Omega} \nabla \upsilon \cdot \Gamma dV = \int_{\Omega} \upsilon f dV + \int_{\delta\Omega} \upsilon G dA \tag{16-8}$$

This final weak formulation of the standard general form PDE therefore also explains why the Neumann boundary condition on the second line of Equation 16-1 looks the way it does.

The Weak Form PDE

The Weak Form PDE provides a general interface for specifying and solving PDEs in the weak form.

The weak form does not define any coefficients and does not even separate the different equations in a system of equations. When specifying a PDE and its boundary conditions in the weak form, you specify contributions to a generic weak-form equation, which for a 3D model reads:

$$0 = \sum_{i=1}^{N_3} \int_{\Omega_i} W_3^i dV_i + \sum_{j=1}^{N_2} \int_{\delta\Omega_j} W_2^j dA_j + \sum_{k=1}^{N_1} \int_{\delta^2\Omega_k} W_1^k dL_k + \sum_{m=1}^{N_0} \sum_{\delta^3\Omega_m} W_0^m \tag{16-9}$$

This weak equation has

- N_3 domain contributions $W^i{}_3$, each integrated over domain selection Ω_i
- N_2 boundary contributions $W^j{}_2$, each integrated over boundary selection $\delta\Omega_j$
- N_1 edge contributions $W^k{}_1$, each integrated over edge selection $\delta^2\Omega_k$
- N_0 point contributions $W^m{}_0$, each summed over point selection $\delta^3\Omega_m$

To specify Equation 16-8, in 3D, identify $N_3 = N_2 = 1$, $N_1 = N_0 = 0$, $W^1{}_3 = \nabla\upsilon\cdot\Gamma + \upsilon f$, and $W^1{}_2 = = \upsilon G$, and get

$$0 = \int_{\Omega_1} (\nabla \upsilon \cdot \Gamma + \upsilon f) dV_1 + \int_{\delta\Omega_1} \upsilon G dA_1 \tag{16-10}$$

Note that all contributions are summed into the same integral equation without any particular order. Therefore, whether you write two equations in separate contributions or sum them into one single contribution normally does not matter. There is, however, a small caveat: the index on dV_i, dA_j, and dL_k indicate that each contribution may be integrated in a different way. The integration can be performed with respect to either material or spatial coordinates and, in addition, using different numerical quadrature orders. But while working inside a single PDE interface, all contributions are integrated in the same way.

USING THE TEST OPERATOR

When specifying a weak contribution, you may use all variables normally available for evaluation in equation contributions and during postprocessing. This includes independent variables (coordinates), dependent variables

and their derivatives, and other predefined and user-defined variables, parameters and constants. In addition, you must use the `test` operator to distinguish between test functions and the solution.

> The `test` operator must always occur linearly in each weak form contribution. Contributions or terms without any `test` operator are ignored, while terms nonlinear in the test operator are considered an error.

In many cases, it is sufficient to let the test operator act directly on the dependent variables and their derivatives. For example, the weak form of Equation 16-10 in two dimensions is

```
test(u)*f+(Gammax*test(ux)+Gammay*test(uy))
```

on the domain level, and

```
test(u)*G
```

on the boundary level. `Gammax` and `Gammay` are variables representing the components of Γ, and `f` and `G` are variables representing f and G, respectively.

In some cases, it is more convenient to insert an expression or user-defined variable into the test function. One example of this is geometrically nonlinear solid mechanics, where the weak form can be written as a sum of terms `S_i*test(E_i)`, where `S_i` is a stress measure and `E_i` its conjugate strain measure.

When a nonlinear expression — for example, a Green-Lagrange strain — is inserted into the `test` operator, the operator acts as a linear differential operator. This means that the argument expression is effectively first differentiated with respect to each dependent variable it contains, and the results are then multiplied by the test function of the corresponding variable. Therefore, the heat equation may alternately be implemented as `q*test(u)-0.5*k*test(ux^2+uy^2)`. Using the chain rule on the second term with the `test` operator as the differential operator returns the standard weak form of the equation given above.

In another example, $\mathrm{test}(F(u, \nabla u))$, the `test` operator is equivalent to:

$$\sum_i \mathrm{test}(u_i)\frac{\partial}{\partial u_i}F(u_i, \nabla u_i) + \mathrm{test}(\nabla u_i)\frac{\partial}{\partial \nabla u_i}F(u_i, \nabla u_i)$$

for all dependent variables u_i.

> For more information about the test operator and other operators, see Operators, Functions, and Constants.

Specifying and Interpreting Boundary Conditions

The formulation of the boundary conditions in general form (Equation 16-1) and coefficient form (Equation 16-2) imposes both Dirichlet and Neumann conditions at the same time:

$$\begin{cases} -\mathbf{n}\cdot\Gamma = g - qu - h^T\mu & \text{on } \partial\Omega \\ 0 = R & \text{on } \partial\Omega_c \\ u = r & \text{on } \partial\Omega_d \end{cases}$$

where Γ is the *flux vector* ($\Gamma = -c\nabla u - \alpha u + \gamma$ for a coefficient form equation) and $\delta\Omega_c$ and $\delta\Omega_d$ are parts of the overall boundary, $\delta\Omega$, where general constraints and Dirichlet conditions have been specified. Combining conditions of

different types on the same boundary is possible because of a new dependent variable μ, which is defined only on the boundary. This unknown variable μ is called a *Lagrange multiplier* and usually has a physical interpretation. For example, in structural mechanics problems, the Lagrange multiplier equals the reaction forces on the boundary.

The factor h^T in the Neumann boundary condition is the *constraint force Jacobian*. It decides how the Lagrange multipliers enforcing the constraint are scaled and distributed over the equations. The default settings in a Constraint node use

$$h^T = -\left(\frac{dR}{du}\right)^T$$

while a Dirichlet Boundary Condition node by default corresponds to $h^T = -1$. For example:

- The Dirichlet condition is $u = r$ and the default constraint settings imply $h^T = -1$. The Neumann condition becomes:

  $$-\mathbf{n} \cdot \Gamma = g - qu + \mu$$

  The Lagrange multiplier, μ, adjusts so as to satisfy the requested Dirichlet condition. Specifying a nonzero g changes the value of the Lagrange multiplier on the same boundary but does not affect the actual solution u. Therefore, this equation can usually be ignored, leaving effectively a pure Dirichlet condition.
- When no constraint is applied on a boundary, the value of R is zero, or equivalently, the Dirichlet condition reads $0 = 0$. Therefore h^T is zero and the Neumann condition is:

  $$-\mathbf{n} \cdot \Gamma = g - qu$$

  This is the generalized Neumann condition without a Lagrange multiplier.

- Boundary Condition Types
- The PDE Interfaces

EXAMPLE: SYSTEM OF TWO VARIABLES IN THE GENERAL FORM

The following example demonstrates a number of possible boundary condition combinations for a stationary system with two dependent variables u_1 and u_2 and two constraints when reaction terms are applied symmetrically on all physics. This is the default, and most useful, implementation. Written in general form:

$$\begin{cases} \nabla \cdot \Gamma_1 = F_1 & \text{in } \Omega \\ \nabla \cdot \Gamma_2 = F_2 & \text{in } \Omega \end{cases}$$

with the default Neumann boundary conditions

$$\begin{cases} -\mathbf{n} \cdot \Gamma_1 = G_1 + \frac{\partial R_1}{\partial u_1}\mu_1 + \frac{\partial R_2}{\partial u_1}\mu_2 & \text{on } \partial\Omega \\ -\mathbf{n} \cdot \Gamma_2 = G_2 + \frac{\partial R_1}{\partial u_2}\mu_1 + \frac{\partial R_2}{\partial u_2}\mu_2 & \text{on } \partial\Omega \end{cases}$$

writing out the symmetric application of reaction terms on all dependent variables, and the Dirichlet boundary conditions:

$$\begin{cases} 0 = R_1 & \text{on } \partial\Omega \\ 0 = R_2 & \text{on } \partial\Omega \end{cases}$$

The same set of boundary conditions are accessible in all PDE interfaces. To illustrate the flexibility of the Constraint boundary condition $R = 0$, consider these cases:

Case 1: Let $R_1 = R_2 = 0$. Then the Dirichlet boundary conditions give $0 = 0$. In addition, the terms containing the Lagrange multipliers disappear from the Neumann boundary condition. Thus you have only the Neumann boundary conditions:

$$\begin{cases} -\mathbf{n} \cdot \Gamma_1 = G_1 & \text{on } \partial\Omega \\ -\mathbf{n} \cdot \Gamma_2 = G_2 & \text{on } \partial\Omega \end{cases}$$

Case 2: Let $R_1 = r_1 - u_1$ and $R_2 = r_2 - u_2$. Then the Dirichlet conditions are the usual $u_1 = r_1$ and $u_2 = r_2$. Using default settings for the constraint reaction terms,

$$h = \begin{bmatrix} 1 & 0 \\ 0 & 1 \end{bmatrix}$$

and the Neumann boundary conditions become:

$$\begin{cases} -\mathbf{n} \cdot \Gamma_1 = G_1 - \mu_1 & \text{on } \partial\Omega \\ -\mathbf{n} \cdot \Gamma_2 = G_2 - \mu_2 & \text{on } \partial\Omega \end{cases}$$

These last equations impose no restrictions on u_1 or u_2, because the Lagrange multipliers μ_1 and μ_2 always adjust so as to fulfill the Dirichlet conditions. In this case, ignore the Neumann boundary conditions.

Case 3: Let $R_1 = r_1 - u_1$ and $R_2 = 0$. Then the Dirichlet conditions are

$$\begin{cases} 0 = r_1 - u_1 & \text{on } \partial\Omega \\ 0 = 0 & \text{on } \partial\Omega \end{cases}$$

and the default Neumann conditions including reaction terms are:

$$\begin{cases} -\mathbf{n} \cdot \Gamma_1 = G_1 - \mu_1 & \text{on } \partial\Omega \\ -\mathbf{n} \cdot \Gamma_2 = G_2 & \text{on } \partial\Omega \end{cases}$$

The first Neumann condition can be ignored because it imposes no restriction on u_1 or u_2. You effectively have only the Dirichlet condition on u_1 together with the second Neumann condition.

Case 4: The same as Case 3 but with the two PDEs interchanged (Γ_1 and Γ_2 as well as F_1 and F_2). Then the PDEs are:

$$\begin{cases} \nabla \cdot \Gamma_2 = F_2 & \text{in } \Omega \\ \nabla \cdot \Gamma_1 = F_1 & \text{in } \Omega \end{cases}$$

The Dirichlet condition is similar to that in Case 3: $u_1 = r_1$. By default, the Neumann conditions then become:

$$\begin{cases} -\mathbf{n} \cdot \Gamma_2 = G_2 - \mu_1 & \text{on } \partial\Omega \\ -\mathbf{n} \cdot \Gamma_1 = G_1 & \text{on } \partial\Omega \end{cases}$$

Effectively, you have only the Neumann condition $-\mathbf{n} \cdot \Gamma_1 = G_1$. In comparison with Case 3, the PDEs and the Dirichlet conditions are identical, while the Neumann conditions are different. Both the Dirichlet and the Neumann conditions are now applied on u_1, and nothing is specified for u_2.

	This example shows that when mixing Dirichlet and Neumann conditions on Coefficient Form PDEs and General Form PDEs, the ordering of the equations and the dependent variables are important. However, the ordering of the Dirichlet conditions does not matter because the different Lagrange multipliers are for all practical purposes indistinguishable from each other.

Case 5: Finally, let $R_1 = u_2 - u_1$ and $R_2 = 0$. Also, assume that u_1 and u_2 exist on two adjacent domains rather than on the same domain. The normal vectors as seen from the two sides are then $\mathbf{n}_1 = -\mathbf{n}_2 = \mathbf{n}$. Then the Dirichlet conditions are:

$$\begin{cases} 0 = u_2 - u_1 & \text{on } \partial\Omega \\ 0 = 0 & \text{on } \partial\Omega \end{cases}$$

and the Neumann conditions using the default symmetric reaction terms are:

$$\begin{cases} -\mathbf{n}_1 \cdot \Gamma_1 = G_1 - \mu_1 & \text{on } \partial\Omega \\ -\mathbf{n}_2 \cdot \Gamma_2 = G_2 + \mu_1 & \text{on } \partial\Omega \end{cases}$$

The same Lagrange multiplier now appears in both Neumann conditions, which can have different definitions of Γ and G. Therefore, contrary to Cases 2 and 3, the Neumann conditions cannot be ignored. Instead, adding the two conditions, it becomes apparent that the solution and flux on the boundary must fulfill:

$$\begin{cases} 0 = u_2 - u_1 & \text{on } \partial\Omega \\ -\mathbf{n}_1 \cdot \Gamma_1 - \mathbf{n}_2 \cdot \Gamma_2 = G_1 + G_2 & \text{on } \partial\Omega \end{cases}$$

In particular, if $G_1 = G_2 = 0$, the last condition simplifies to:

$$-\mathbf{n} \cdot (\Gamma_1 - \Gamma_2) = 0 \text{ on } \partial\Omega$$

This means that both the variables u_1 and u_2 and the corresponding fluxes are equal at the boundary. If u_1 and u_2 represent the same quantity, this is the same continuity condition that holds implicitly at every mesh element boundary in the model, where nothing else has been specified.

	In all of these examples, the values of the Lagrange multipliers do not matter. However, they often have a physical significance. In structural mechanics, the term $h^{\mathrm{T}}\mu$ in the Neumann condition is the reaction force necessary to satisfy the kinematic constraints described by the Dirichlet conditions.

Symmetric and Nonsymmetric Constraints

Constraints formulated through the coefficient R in The Coefficient Form PDE Interfaces and The General Form PDE Interfaces by default give rise to *globally symmetric bidirectional* constraints. This happens when the constraint settings specify that reaction terms are to be applied symmetrically on all physics.

A bidirectional symmetric constraint dictates exactly how the flux conditions (or Neumann boundary conditions) are influenced by the constraint force. For the coefficient form, the flux condition is

$$\mathbf{n} \cdot (c\nabla u + \alpha u - \gamma) = g - qu - \left(\frac{\partial R}{\partial u}\right)^T \mu$$

and for the general form, the flux condition is

$$-\mathbf{n} \cdot \Gamma = g - qu - \left(\frac{\partial R}{\partial u}\right)^T \mu$$

The last term on the right-hand side in both expressions is the globally symmetric constraint reaction term, or *generalized constraint force*. Thus, with symmetric constraints, a flux condition cannot be enforced independently of the constraints.

In mathematics, as well as in multiphysics modeling, it is often necessary to enforce Neumann conditions and Dirichlet conditions more freely than what is possible through symmetric constraints. As an example, consider the general form and assume that you want to enforce the boundary conditions:

$$\begin{cases} 0 = r_1 - u_1 & \text{on } \partial\Omega \\ -\mathbf{n} \cdot \Gamma_2 = G_2 & \text{on } \partial\Omega \end{cases}$$

If $r_1 = r_1(u_2)$, the first condition is fulfilled but not the second if the default reaction term definition is used. This is because the globally symmetric constraint force is not zero:

$$-\mathbf{n} \cdot \Gamma_2 = G_2 + \frac{\partial R_1}{\partial u_2}\mu_1 + \frac{\partial R_2}{\partial u_2}\mu_2 = G_2 + \frac{\partial r_1}{\partial u_2}\mu_1 \neq G_2$$

To remedy this limitation with bidirectional constraints, the **Constraint Settings** section allows you to **Apply reaction terms on** either dependent variables from **Current physics (internally symmetric)** or **Individual dependent variables**.

Both options imply a unidirectional and possibly nonsymmetric constraint in the sense that some dependent variables are considered as constants for the purpose of enforcing the constraint.

	To display the **Constraint Settings** section in Constraint nodes, click the **Show More Options** button ( ) on the **Model Builder** toolbar and select **Advanced Physics Options** in the **Show More Options** dialog box.

When constraint reaction terms are applied only on the current physics, flux conditions in other interfaces are left untouched by the constraint. If reaction terms are applied only to individual variables, this leaves flux conditions untouched on all but the specific variables. For the above example, both settings have the same desired effect if u_1 and u_2 belong to different interfaces. If these belong to the same interface, applying reaction terms to **Current physics (internally symmetric)** has the same effect as the default application to **All physics (symmetric)**.

In multiphysics modeling, unidirectional constraints are, for example, necessary for the following boundary conditions:

- Normal-direction constraints on a moving mesh, where the mesh motion is part of the problem. These conditions are of the type $\mathbf{n} \cdot \mathbf{u} - r = 0$ where $\mathbf{n} = \mathbf{n}(\mathbf{x})$ is the boundary normal, $\mathbf{u}$ is a vector field (displacements or velocity), and $\mathbf{x}$ is the mesh coordinate vector. Symmetric constraints give constraint forces not only on the equations for $\mathbf{u}$ but also on the equations for $\mathbf{x}$, which typically are not wanted.
- Constraints on time derivatives, such as

$$\frac{\partial u}{\partial t} = 1$$

  on the boundary (typing `1-ut` using COMSOL syntax for R in the constraint $R = 0$). The default bidirectional symmetric constraint attempts to apply the test function on the time derivative of u, which is not supported. The solution is to apply the reaction terms on **Individual dependent variables**. Note that the constraint must also be a weak constraint because pointwise constraints for time derivatives are not supported.
- Wall boundary conditions for turbulent fluid flow. For the k-ε turbulence model, this condition is of the type $k - r(\varepsilon)$, $-\mathbf{n} \cdot \nabla\varepsilon$, where r is a given function. Bidirectional constraints for the first relation imply that the second relation cannot hold.

Unidirectional constraints can be enforced both in a pointwise sense and in a weak sense.

	Turbulent fluid flow requires the CFD Module or Heat Transfer Module.

	For descriptions about how to use even more general pointwise and weak nonsymmetric constraints, see Pointwise Constraint and Weak Constraint, respectively. Also see Boundary Condition Types.

The PDE Interfaces

COMSOL Multiphysics includes different PDE interfaces for equation-based modeling, distinguished by the equation formulation used for entering the equations: Coefficient Form, General Form, and Weak Form. The interfaces are identical except for the default node added to the top geometric entity level where the interface is active. You can still use a General Form to specify equations in a Coefficient Form PDE interface, or add Weak Form contributions to a General Form PDE interface.

	About Auxiliary Equation-Based Nodes and The PDE, Boundary Elements Interface are also available and described in other sections.

	• Modeling with PDEs • Notational Conventions

Adding a PDE Interface to a Component

To add a new Component and use one of the equation interfaces, start with the instructions in Creating a New Model. Then, when you are adding the physics, expand the **Mathematics>PDE Interfaces** node in the list of physics interfaces and select one of the PDE interfaces in the list. For PDEs on geometric entities other than domains, expand the **Lower Dimensions** node.

SPECIFYING A SYSTEM OF EQUATIONS

COMSOL Multiphysics allows the creation of equations with more than one dependent variable. To do this, on the **Add Physics** page under **Dependent variables**, enter the **Number of dependent variables** in the field. The COMSOL software then automatically assigns variable names, typically `u1`, `u2`, `u3`, and so on. You can also edit the default variable name (as long as it is valid and unique) in the **Dependent variables** table. Several scalar PDEs can also be coupled using a multiphysics approach.

	For any form of PDE interface you add to a Component, additional equation nodes can be added in Coefficient Form, General Form, or Weak Form.

MODELING WITH PDES ON BOUNDARIES, EDGES, AND POINTS

The Coefficient Form PDE, General Form PDE, and Weak Form PDE are also available on boundaries, edges, and at points in the geometry.

Extra weak equations can be added by adding auxiliary dependent variables to a Weak Contribution (PDEs and Physics) node. Use such weak form equations as a way to handle thin layers; COMSOL then solves the problem by modeling rather than meshing. This approach reduces the solution time.

	See *Transport and Adsorption* (Application Library path **COMSOL_Multiphysics/Chemical_Engineering/transport_and_adsorption**) to learn how to use a General Form Boundary PDE interface to model a thin adsorption layer with diffusion as a PDE on the boundary of a convection-diffusion problem. See *Rock Fracture Flow* (Application Library path **COMSOL_Multiphysics/Geophysics/rock_fracture_flow**) to learn how to use a Coefficient Form Boundary PDE interface to solve the Reynolds equation on a boundary in a 3D model. See *Shell Diffusion in a Tank* (Application Library path **COMSOL_Multiphysics/Equation_Based/shell_diffusion**) for an example of tangential derivative variables.

	• Modeling with PDEs • Notational Conventions • The PDE Interfaces

Settings for the Discretization Sections

There are two categories of discretization — a section on the physics interface node's **Settings** window (described here) and adding a Discretization (Node) for global equation-based modeling. To enable the other settings beyond the element order and shape function type and to be able to add separate **Discretization** nodes, click the **Show More Options** button ( ) and select **Advanced Physics Options** in the **Show More Options** dialog box.

The settings described here are:

- Element Order and Shape Function Type
- Discretization of Fluids
- Accurate Boundary Fluxes
- Splitting Complex-Valued Variables
- Element Order and Shape Function Type

ELEMENT ORDER AND SHAPE FUNCTION TYPE

The PDE and weak form interfaces have different shape functions available with the associated element order (the order of the shape functions). The element order (or, more precisely, the order of the shape function) directly affects the number of degrees of freedom in the solution and the accuracy of the solution. Increasing the order of the elements roughly corresponds to a uniform mesh refinement. Most physics interfaces use Lagrange elements, which can be of order 1 to 5 (or 1 to 7 for the PDE and weak form interfaces), with 2 being the default order in most cases. Where serendipity elements are available (in the mathematics interfaces and the Solid Mechanics interface, for example, for element orders 2, 3, and, in some cases, 4), they can be more efficient than Lagrange elements of the same order (in terms of number of elements and the solution time) for some mesh element types (especially hexahedral meshes), but they can also be more sensitive to distorted mesh elements.

The software adapts the order of the numerical integration to the element orders for the physics in the model. Some physics interfaces use special element types or a reduced element order for some of the field variables. Select the

Shape function type and the **Element order** as, in most cases, **Linear**, **Quadratic**, **Cubic**, **Quartic**, or **Quintic** (for order 1–5, respectively).

Table 16-2 is an overview of the available shape function types and the element orders supported.

Not all shape functions are available for all space dimensions and types of equations, and not all shape functions support all orders.

TABLE 16-2: SHAPE FUNCTION TYPES

NAME	ORDER	COMMENTS
Lagrange	1–5 or 1–7. Default: 2	The default type
Hermite	3–7. Default: 3	
Argyris	Order 5 only.	2D only
Discontinuous Lagrange	0–7. Default: 2	
Nodal discontinuous Lagrange	1–10 (1D and 2D); 1–7 (3D). Default: 2	Special shape functions for wave equations
Discontinuous scalar density	0–7. Default: 2	Not available on boundaries, edges, or points
Bubble	2 (1D); 3 (2D); 4 (3D)	Lower order on boundaries, edges, and points
Gauss point data	0, 2, 4, 6, 8, 10, 12, or 14. Default: 4	Discrete values associated with the quadrature points in an integration rule of the given order
Nodal serendipity	2–4	In the Solid Mechanics interface, order 2 and 3 are available as Quadratic serendipity and Cubic serendipity, respectively.
Divergence	1–4 (1D and 2D); 1–3 (3D). Default: 2	For vector fields only (1, 2, and 3 dependent variables in 1D, 2D, and 3D, respectively)
Curl	1–4 (2D); 1–3 (3D). Default: 2	2D and 3D only. For vector fields only (1, 2, and 3 dependent variables in 1D, 2D, and 3D, respectively)

Additional information is included in Elements and Shape Functions chapter in this manual and in Elements and Shape Function Programming in the *COMSOL Multiphysics Programming Reference Manual*.

DISCRETIZATION OF FLUIDS

The following is an example of the choices of element order for Fluid Flow interfaces:

- **P1+P1** means linear elements for both the velocity components and the pressure field. Linear elements are computationally cheaper than higher-order elements and are also less prone to introducing spurious oscillations, thereby improving the numerical robustness. In other words, this can be computationally efficient but requires streamline stabilization of the Navier-Stokes equations. This is the default element order for the Laminar Flow and Turbulent Flow single-phase flow interfaces and the discretization of fluids in the multiphase flow interfaces.

- **P2+P1** means second-order elements for the velocity components and linear elements for the pressure field. Second-order elements work well for low flow velocities. This is the default element order for the Creeping Flow interface.
- **P3+P2** means third-order elements for the velocity components and second-order elements for the pressure field. This can add additional accuracy but it also adds additional degrees of freedom compared to P2+P1 elements.

	The abbreviation P_mP_n is often used to indicate the polynomial order of, in this case, the shape functions (elements) for the velocity components (m) and the pressure (n) when using tetrahedral or triangular elements. Here a corresponding nomenclature is used for all element shapes. The theory about this is in P.M. Gresho and R.L. Sani, *Incompressible Flow and the Finite Element Method, Volume 2: Isothermal Laminar Flow*, John Wiley & Sons, 2000.

	The discretization of the temperature field follows that of the fluid's velocity components, so the temperature order is 1 for **P1+P1**, 2 for **P2+P1**, and 3 for **P3+P2**.

	• Numerical Stability — Stabilization Techniques for Fluid Flow • Numerical Stabilization

ACCURATE BOUNDARY FLUXES

Some physics can create and compute variables that accurately represent the flux across all boundaries. To enable these variables, select the **Compute boundary fluxes** check box. Optionally, the smoothing can provide a more well-behaved flux value close to singularities. You add smoothing by selecting the **Apply smoothing to boundary fluxes** check box.

	Computing Accurate Fluxes

SPLITTING COMPLEX-VALUED VARIABLES

From the **Value type when using splitting of complex variables** list, you can specify the value type (**Real** or **Complex)** of dependent variables when the **Split complex variables in real and imaginary parts** setting is activated in the **Compile Equations** node of any solver sequence used. The default is the complex value type, but you can specify that the value of a dependent variable is real to make sure that it does not get affected by small imaginary contributions, which can occur, for example, when combining a Time Dependent or Stationary study with a frequency-domain study. If the split complex variables setting is not active, the value type is ignored.

	For information about how to specify the splitting of complex variables, see Compile Equations.

	By default, the general number formatting algorithm for complex-valued numbers in COMSOL Multiphysics ignores small real or imaginary parts. If you want to see also such small real or imaginary parts, open the **Preferences** dialog box, and under **Precision** on the **General** page, clear the **Suppress small real or imaginary part** check box.

The Coefficient Form PDE Interfaces

The **Coefficient Form PDE (c)** interface ( ), found under the **Mathematics>PDE Interfaces** branch ( ) when adding an interface, covers many well-known PDEs.

When this interface is added, these default nodes are also added to the **Model Builder**: **Coefficient Form PDE**, **Zero Flux**, and **Initial Values**. Then, from the **Physics** toolbar, add other nodes that implement, for example, boundary conditions. You can also right-click **Coefficient Form PDE** to select features from the context menu.

	The Coefficient Form PDE interface is also available in other forms from the **PDE interfaces>Lower Dimensions** submenu: **Coefficient Form Boundary PDE (cb)**, **Coefficient Form Edge PDE (ce)**, and **Coefficient Form Point PDE (cp)**. Also see Modeling with PDEs on Boundaries, Edges, and Points.

	The Coefficient Form PDE discusses the formulation and settings pertaining to the coefficient form, as well as the general PDE terminology used in COMSOL Multiphysics.

SETTINGS

The **Label** is the default physics interface name.

The **Name** is used primarily as a scope prefix for variables defined by the physics interface. Refer to such physics interface variables in expressions using the pattern `<name>.<variable_name>`. In order to distinguish between variables belonging to different physics interfaces, the `name` string must be unique. Only letters, numbers, and underscores (_) are permitted in the **Name** field. The first character must be a letter.

The default **Name** (for the first Coefficient Form PDE interface in the model) is `c` (in domains), `cb` (on boundaries), `ce` (on edges), or `cp` (at points).

UNITS

By default, the PDE interfaces are dimensionless, but units can be defined for the dependent variable and the source term (that is, the overall left and right side of the equation). The units for these quantities — in combination with the units for length and time — fully define the units for all other terms in the equations. Select the units from a list of physical quantities or enter the unit directly.

Select the **Dependent variable quantity** that defines the unit for the dependent variable u. The default is **Dimensionless** (with **1** in the **Unit** column). Click the **Select Dependent Variable Quantity** button ( ) to open the **Physical Quantity** dialog box to browse to find a physical quantity to use. You can also type a search string in the text field at the top of the dialog box and then click the **Filter** button ( ) to filter the list of physical quantities. For example, type `potential` and click the **Filter** button to only list physical quantities that represent some kind of potential. Alternatively, click the **Define Dependent Variable Unit** button ( ) to edit the unit directly in the **Unit** column, typing a unit to define the dependent variable quantity. The quantity column then contains **Custom unit**.

Select the **Source term quantity** that defines the unit for the source term f (the unit for the right — and left — side of the PDE). **Custom unit** is the default quantity (with **m^-2** in the **Unit** column). Click the **Select Source Term Quantity** button ( ) to open the **Physical Quantity** dialog box to browse to find a physical quantity to use. You can also type a search string in the text field at the top of the dialog box and then click the **Filter** button ( ) to filter the list of physical quantities. For example, type `potential` and click the **Filter** button to only list physical quantities that represent some kind of potential. Alternatively, click the **Define Source Term Unit** button ( ) to edit the unit

directly in the **Unit** column, typing a unit (for example, `W/m^3` or `A/m^3`) to define the dependent variable quantity. The quantity column then contains **Custom unit**.

For the **Classical PDE>Heat Equation** interface, the **Dependent variable quantity** defaults to **Temperature** (unit: **K**), and the **Source term quantity** defaults to **Heat source** (unit: **W/m^3**).

DEPENDENT VARIABLES

Enter the **Number of dependent variables** (the default is 1) and set the field and dependent variable names. The default **Field name** and **Dependent variables** name for a single scalar PDE variable is u. If the **Field name** coincides with the name of another field of the same unit and number of components, the two fields (and the interfaces which define them) share degrees of freedom and dependent variable names.

A **Field name** must not coincide with the name of a field of another type, or with a component name belonging to some other field. Component names must be unique within a model except when two interfaces share a common field name.

DISCRETIZATION

Select a **Shape function type** (finite element type): **Lagrange** (the default), **Hermite**, **Discontinuous Lagrange**, **Nodal discontinuous Lagrange**, **Discontinuous scalar density**, **Bubble**, or **Gauss point data**.

To display additional settings in this section, click the **Show More Options** button ( ) and select **Advanced Physics Options** in the **Show More Options** dialog box.

If you have added a Deformed Geometry or Moving Mesh interface, there is also a **Frame** list for specifying the frame for differentiation and quadrature. Choosing the frame can be needed if you want to write your own mesh smoothing or regularization equations when working with a deformed geometry. Select **Geometry**, **Mesh**, **Spatial** (the default), or **Material** from the **Frame** list.

- Modeling with PDEs
- Working with Geometric Entities
- Settings for the Discretization Sections
- Computing Accurate Fluxes
- Compile Equations

For an example of the use of units in a PDE interface, see *Shell Diffusion in a Tank*: Application Library path **COMSOL_Multiphysics/Equation_Based/shell_diffusion**.

The General Form PDE Interfaces

The **General Form PDE (g)** interface ( ), found under the **Mathematics>PDE Interfaces** branch ( ) when adding an interface, is a flexible way to specify PDEs in a general form.

When this interface is added, these default nodes are also added to the **Model Builder**: **General Form PDE**, **Zero Flux**, and **Initial Values**. Then, from the **Physics** toolbar, add other nodes that implement, for example, boundary conditions. You can also right-click **General Form PDE** to select features from the context menu.

	The General Form PDE interface is also available in other forms from the **PDE interfaces>Lower Dimensions** submenu: **General Form Boundary PDE (gb)**, **General Form Edge PDE (ge)**, and **General Form Point PDE (gp)**. Also see Modeling with PDEs on Boundaries, Edges, and Points.

	The General Form PDE discusses the formulation and settings pertaining to the general form.

SETTINGS

The **Label** is the default physics interface name.

The **Name** is used primarily as a scope prefix for variables defined by the physics interface. Refer to such physics interface variables in expressions using the pattern `<name>.<variable_name>`. In order to distinguish between variables belonging to different physics interfaces, the `name` string must be unique. Only letters, numbers, and underscores (_) are permitted in the **Name** field. The first character must be a letter.

The default **Name** (for the first General Form PDE interface in the model) is `g` (in domains), `gb` (on boundaries), `ge` (on edges), or `gp` (at points).

	See The Coefficient Form PDE Interfaces remaining settings.

	• General Form PDE • Domain, Boundary, Pair, Edge, and Point Conditions for PDEs • Modeling with PDEs

The Weak Form PDE Interfaces

The **Weak Form PDE (w)** interface, found under the **Mathematics>PDE Interfaces** branch (Δu) when adding an interface, is identical to The Coefficient Form PDE Interfaces and The General Form PDE Interfaces except for the default node on the top geometric entity level being a Weak Form PDE node.

	The Weak Form PDE interface is also available in other forms from the **PDE interfaces>Lower Dimensions** submenu: **Weak Form Boundary PDE (wb)**, **Weak Form Edge PDE (we)**, and **Weak Form Point PDE (wp)**. Also see Modeling with PDEs on Boundaries, Edges, and Points.

In all interfaces, weak expressions can be added, which COMSOL Multiphysics adds to the overall equation. Adding one of these interfaces creates a **PDE** node ($\int du$) for PDE modeling using a weak formulation. You can also add the same type of Weak Form PDE node on the domain level to any other PDE interface.

When this interface is added, these default nodes are also added to the **Model Builder**: **Weak Form PDE**, **Zero Flux** (for a Weak Form PDE on the domain level only), and **Initial Values**. Then, from the **Physics** toolbar, add other nodes that implement, for example, boundary conditions. On the domain level, edge level, and boundary levels, the same

boundary conditions can be used as for the Coefficient Form PDE and General Form PDE. You can also right-click **Weak Form PDE** to select features from the context menu.

SETTINGS

The **Label** is the default physics interface name.

The **Name** is used primarily as a scope prefix for variables defined by the physics interface. Refer to such physics interface variables in expressions using the pattern `<name>.<variable_name>`. In order to distinguish between variables belonging to different physics interfaces, the `name` string must be unique. Only letters, numbers, and underscores (_) are permitted in the **Name** field. The first character must be a letter.

The default **Name** (for the first Weak Form PDE interface in the model) is `w` (in domains), `wb` (on boundaries), `we` (on edges), or `wp` (at points).

	See The Coefficient Form PDE Interfaces for the rest of the settings.

	• Weak Form PDE • Domain, Boundary, Pair, Edge, and Point Conditions for PDEs • Modeling with PDEs

The Classical PDE Interfaces

Many classical PDEs are instances of Coefficient Form PDEs. The classical PDEs have their own interfaces found under the **Mathematics>Classical PDEs** branch (∇^2) when adding an interface. Classical PDEs, except the Stabilized Convection-Diffusion Equation, can also be added to all of the forms of PDE interfaces as domain nodes.

The following Classical PDE interfaces and nodes are available. All of these have the same settings as The Coefficient Form PDE Interfaces but adapted to a classical PDE:

- **Laplace Equation**
- **Poisson's Equation**
- **Wave Equation**
- **Helmholtz Equation**
- **Heat Equation**
- **Convection-Diffusion Equation**
- **Stabilized Convection-Diffusion Equation**

The Stabilized Convection-Diffusion Equation is suitable for convection-dominated convection-diffusion equations and contains streamline diffusion and crosswind diffusion stabilization, active by default, in a **Consistent Stabilization** section, and isotropic diffusion in an **Inconsistent Stabilization** section. It cannot be combined with other forms of the PDE interfaces in the same interface.

	Except for the Stabilized Convection-Diffusion Equation, the classical PDEs are not available in axisymmetric geometries. You can then use a Coefficient Form PDE instead, but note that you must compensate for missing factors related to the curvature of the coordinate system. See Notational Conventions for more information.

- Compact and Standard Notations for Classical PDEs
- Domain, Boundary, Pair, Edge, and Point Conditions for PDEs

Domain, Boundary, Pair, Edge, and Point Conditions for PDEs

The PDE interfaces have the following domain, boundary, pair, edge, and point conditions described in this section and listed in alphabetical order. Some nodes are selected from the **Classical PDEs** submenu:

- Coefficient Form PDE
- Constraint
- Convection-Diffusion Equation
- Dirichlet Boundary Condition
- Flux/Source
- General Form PDE
- Heat Equation
- Helmholtz Equation
- Initial Values
- Interior Dirichlet Boundary Condition
- Interior Flux/Source
- Laplace's Equation
- No Diffusive Flux
- No Flux
- Periodic Condition
- Poisson's Equation
- Source, Edge Source, and Point Source
- Wave Equation
- Weak Form PDE
- Zero Flux

There are also auxiliary equation-based nodes found under the **More**, **Edges**, and **Points** submenus. To display these submenus in the context menu, click the **Show More Options** button ( ) on the **Model Builder** toolbar and select **Equation-Based Contributions** in the **Show More Options** dialog box. Then choose from the following (listed in alphabetical order):

- Auxiliary Dependent Variable
- Discretization (Node)
- Pointwise Constraint
- Weak Constraint
- Weak Contribution (PDEs and Physics)
- Weak Contribution on Mesh Boundaries

There is generally a **More** submenu for the domain level as well as one for the boundary level on a physics context menu. See Physics Interface Node Context Menu Layout for an example.

For some of the constraint nodes — Dirichlet Boundary Condition, Constraint, and Pointwise Constraint — you can add subnodes to exclude surrounding surfaces, edges, or points from the constraint. See Excluded Points, Excluded Edges, Excluded Surfaces.

- Modeling with PDEs
- Working with Geometric Entities
- The PDE Interfaces and Classical PDE Domain Nodes

Initial Values

The **Initial Values** node adds initial values for the dependent variables that can serve as an initial condition for a transient simulation or as an initial guess for a nonlinear solver. If you need to specify more than one set of initial values, you can add additional **Initial Values** nodes.

INITIAL VALUES

Enter a value or expression for the **Initial value for u**, u (dimensionless) and the **Initial time derivative of u**, $\frac{\partial u}{\partial t}$ (SI unit: 1/s). The defaults are 0 for both dependent variables.

Coefficient Form PDE

The **Coefficient Form PDE** node is the default equation for The Coefficient Form PDE Interfaces, and is available for the other forms from the context menu. Specify the coefficients for a coefficient form PDE (see The Coefficient Form PDE and Equation 16-2)

DIFFUSION COEFFICIENT

Enter a value or expression for the diffusion coefficient c. Select **Isotropic**, **Diagonal**, **Symmetric**, or **Full** and enter a c coefficient on various forms in 2D and 3D. If there are multiple dependent variables, there is a matrix of c component inputs.

ABSORPTION COEFFICIENT

Enter a value or expression for the absorption coefficient a. If there are multiple dependent variables, there is a matrix of a component inputs.

SOURCE TERM

Enter a value or expression for the source term f. If there are multiple dependent variables, there is a vector of f component inputs.

MASS COEFFICIENT

Enter a value or expression for the mass coefficient e_a. If there are multiple dependent variables, there is a matrix of e_a component inputs.

DAMPING OR MASS COEFFICIENT

Enter a value or expression for the damping or mass coefficient d_a. If there are multiple dependent variables, there is a matrix of d_a component inputs.

CONSERVATIVE FLUX CONVECTION COEFFICIENT

Enter values or expressions for the conservative flux convection coefficient α vector's components. If there are multiple dependent variables, there is a matrix of α vector component inputs.

CONVECTION COEFFICIENT

Enter values or expressions for the convection coefficient β vector's components. If there are multiple dependent variables, there is a matrix of β vector component inputs.

CONSERVATIVE FLUX SOURCE

Enter values or expressions for the conservative flux source term γ vector's components. If there are multiple dependent variables, there is a vector of γ vector component inputs.

- Interpreting PDE Coefficients
- Working with Geometric Entities
- Specifying and Interpreting Boundary Conditions
- The PDE Interfaces
- Modeling with PDEs

General Form PDE

The **General Form PDE** node is the default equation for The General Form PDE Interfaces, and it is available for the other forms from the context menu. Specify the coefficients for a general form PDE (see The General Form PDE and Equation 16-1).

Except for Conservative Flux described in this section, see Coefficient Form PDE for the rest of the settings.

CONSERVATIVE FLUX

Enter values or expressions for the components of the conservative flux vector Γ. The default values `-ux`, `-uy`, and `-uz` (in 3D) represent the negative gradient of u and makes the left-hand side equal to the Laplace operator. If there are multiple dependent variables, there is one Γ vector for each variable.

- The PDE Interfaces
- Interpreting PDE Coefficients
- Modeling with PDEs

Weak Form PDE

The **Weak Form PDE** node is the default node on the top geometric entity level in The Weak Form PDE Interfaces and may also be added to The Coefficient Form PDE Interfaces and The General Form PDE Interfaces. It contains one weak form expression for each dependent variable in the interface (see Equation 16-9).

WEAK EXPRESSIONS

Enter the weak expressions that COMSOL Multiphysics (together with any other weak expressions on the same domain) sets equal to 0 in the **weak** field. For example, in a 2D Component model with one dependent variable, the default expression on the domain level is `-test(ux)*ux-test(uy)*uy+1[m^-2]*test(u)`. This is the weak formulation of Poisson's equation with the right-hand side $f = 1$. On other geometric entity levels, the default weak expression is 0.

- The PDE Interfaces
- Working with Geometric Entities
- Modeling with PDEs

Source, Edge Source, and Point Source

You can add additional source term nodes on different geometry levels: **Source** on domains, **Edge Source** on edges (3D models), and **Point Source** at points.

SOURCE TERM

Enter a value or expression for the source term f. The default is 0.

Classical PDE Domain Nodes

The nodes available from the **Classical PDEs** submenu can be added to any PDE interface at the domain level. The same node is also available as its own interface from the **Mathematics>Classical PDEs** branch (∇^2) when adding an interface.

	See Coefficient Form PDE for all the settings and Compact and Standard Notations for Classical PDEs for the equations that the Classical PDE interface solves.

The available interfaces and domain nodes are:

LAPLACE'S EQUATION

The **Laplace Equation** is a classic PDE of elliptic type that can describe the behavior of some kind of potential or the steady-state heat equation.

POISSON'S EQUATION

The **Poisson's Equation** is a classical PDE of elliptic type that can describe, for example, electrostatics with a space charge density.

HELMHOLTZ EQUATION

The **Helmholtz Equation** is a classical PDE of elliptic type that can represent, for example, a time-independent form of the wave equation.

WAVE EQUATION

The **Wave Equation** is a classic PDE of hyperbolic type. It is a second-order PDE that describes waves, such as sound waves, light waves, and water waves.

HEAT EQUATION

The **Heat Equation** is a classical PDE of parabolic type that describes time-dependent heat transfer by diffusion or other diffusion processes.

CONVECTION-DIFFUSION EQUATION

The **Convection-Diffusion Equation** is a classical PDE that describes time-dependent transport by convection and diffusion.

STABILIZED CONVECTION-DIFFUSION EQUATION

The **Stabilized Convection-Diffusion Equation** is a classical PDE that describes time-dependent transport by convection and diffusion and includes numerical stabilization for solving convection-dominated problems.

Dirichlet Boundary Condition

The **Dirichlet Boundary Condition** specifies a value of u on the boundary of the domain: $u = r$. By default, it is a unidirectional condition, applying reaction terms on u but not on any variables appearing in r.

DIRICHLET BOUNDARY CONDITION

The Dirichlet boundary condition for each dependent variable (for example, u_2), has a corresponding check box (**Prescribed values for u2**), which is selected by default. Enter a value or expression for the prescribed value in the associated text field or clear the check box as needed. If cleared, no Dirichlet constraint is added for that dependent variable, and, for example, a flux condition on the same boundary then remains as the active boundary condition.

CONSTRAINT SETTINGS

To display this section, click the **Show More Options** button ( ) and select **Advanced Physics Options** in the **Show More Options** dialog box. This section contains settings for specifying the type of constraint and whether to use a pointwise or weak constraint. See Constraint Settings for more information.

	You can add subnodes to exclude the constraint from any surrounding boundary, edge, or point. See Excluded Points, Excluded Edges, Excluded Surfaces.

	See Coefficient Form PDE for all the settings and Compact and Standard Notations for Classical PDEs for the equations that the Classical PDE interface solves.

Constraint

The **Constraint** boundary condition specifies an expression R which is constrained to be equal to zero on the selection, $R = 0$. By default, this is a bidirectional constraint, meaning that all variables in R are affected by reaction terms.

CONSTRAINT

Enter a value or expression for the value of R in the constraint $R = 0$. For example, to constrain u to 2, enter `2-u` in the field for R. The default value, `0`, does not add any constraint.

	The sign in front of u in the constraint controls the sign of the implicit Lagrange multiplier μ, as well as the sign of reaction forces computed using the `reacf()` operator. For consistency with the way predefined physics interfaces implement constraints, write `2-u` rather than `u-2` in R.

CONSTRAINT SETTINGS

To display this section, click the **Show More Options** button ( ) and select **Advanced Physics Options** in the **Show More Options** dialog box. Normally these settings do not need to be changed. This section contains settings for specifying the type of constraint and whether to use a pointwise or weak constraint. See Constraint Settings for more information.

	You can add subnodes to exclude the constraint from any surrounding boundary, edge, or point. See Excluded Points, Excluded Edges, Excluded Surfaces.

See Coefficient Form PDE for all the settings and Compact and Standard Notations for Classical PDEs for the equations that the Classical PDE interface solves.

Excluded Points, Excluded Edges, Excluded Surfaces

Right-click a Constraint, Dirichlet Boundary Condition, or Pointwise Constraint node to add one or more **Excluded Points**, **Excluded Edges**, or **Excluded Surfaces** subnodes. Using those subnodes, you can exclude all or part of the surrounding points, edges, or surfaces from a constraint that acts on the edge, boundary, or domain inside of the excluded geometric entities. For example, the **Excluded Edges** node specifies edges where the higher-dimensional (boundary) constraint for which it is a subnode is not enforced. Excluding a constraint on a surrounding edge can be useful to avoid the constraint affecting the physics on an adjacent boundary, for example.

Flux/Source

The **Flux/Source** boundary condition adds a flux or source g on the boundary:

$$\mathbf{n} \cdot (c\nabla u + \alpha u - \gamma) = g - qu \quad \text{or} \quad -\mathbf{n} \cdot \Gamma = g - qu$$

The first equation describes this boundary condition for a Coefficient Form PDE, and the second term describes it for a General Form PDE. The g term may contain a general expression of the dependent variables. The q coefficient simplifies the implementation of a *Robin boundary condition* by including a term on the form qu, where u is the dependent variable.

INCLUDE

This section is only available for the Stabilized Convection-Diffusion Equation interface.

By default, all check boxes are selected for the **Diffusive flux**, **Conservative convective flux**, and **Nonconservative convective flux** to include all flux components. You can use the Flux/Source boundary condition in the Stabilized Convection-Diffusion Equation interface as an outflow condition by clearing the **Nonconservative convective flux** and **Conservative convective flux** check boxes and as a supersonic outflow condition by clearing all check boxes so that the flux is computed from inside the domain.

BOUNDARY FLUX/SOURCE

Enter a value or expression for the value of the boundary flux or source g in the corresponding field or fields. The default value is 0.

BOUNDARY ABSORPTION/IMPEDANCE TERM

Enter a value or expression for the value of the coefficient q in the corresponding field or fields. The default value is 0. It adds a term qu to the boundary flux or source, which can represent absorption or impedance at the boundary.

For the Stabilized Convection-Diffusion Equation, there is an additional flux term, $(\mathbf{k}\cdot\mathbf{n})u$, so, in addition, you can enter the components of the $\mathbf{k}$ vector in the corresponding text fields.

Zero Flux

The **Zero Flux** boundary condition is the default boundary condition and prescribes a zero flux (insulation) across the boundary:

$$\mathbf{n} \cdot (c\nabla u + \alpha u - \gamma) = 0 \quad \text{or} \quad \mathbf{n} \cdot \Gamma = 0$$

No Flux

The **No Flux** boundary condition prescribes a zero flux (insulation) across the boundary:

$$-\mathbf{n} \cdot (-c\nabla u + \alpha u + \beta u) = 0$$

No Diffusive Flux

The **No Diffusive Flux** boundary condition is the default boundary condition in the Stabilized Convection-Diffusion Equation physics interface and prescribes a vanishing flux due to diffusion across the boundary:

$$-\mathbf{n} \cdot (-c\nabla u) = 0$$

This is the appropriate no flux condition when the relative convective velocity with respect to the boundary velocity is zero. When the fluid velocity at the boundary is not equal to that of the boundary, it is often convenient to prescribe the total flux including convection. In this case, use the No Flux feature instead.

Interior Dirichlet Boundary Condition

The **Interior Dirichlet Boundary Condition**, which is only available for interior boundaries in the Stabilized Convection-Diffusion Equation interface, specifies values of u on the upside and downside of interior boundaries in the domain: $u_\mathrm{u} = r_\mathrm{u}$ and $u_\mathrm{d} = r_\mathrm{d}$.

The red arrows in the **Graphics** window point toward the downside from the upside.

VALUE ON BOUNDARY

Enter values or expressions for the prescribed values on the downside and upside in the associated text fields for r_d and r_u under **Downside** and **Upside**, respectively.

CONSTRAINT SETTINGS

To display this section, click the **Show More Options** button ( ) and select **Advanced Physics Options** in the **Show More Options** dialog box. This section contains settings for specifying the type of constraint. See Constraint Settings for more information.

Interior Flux/Source

The **Interior Flux/Source** boundary condition, which is only available for interior boundaries in the Stabilized Convection-Diffusion Equation interface, adds a flux or source g on the downside and upside of an interior boundary:

$$-\mathbf{n}_\mathrm{d} \cdot (-c\nabla u + \alpha u + \beta u)_\mathrm{d} = g_\mathrm{d} - q_{1\mathrm{d}} u_\mathrm{d} - q_{2\mathrm{d}} u_\mathrm{d} + (\mathbf{k}_\mathrm{d} \cdot \mathbf{n}_\mathrm{d}) u_\mathrm{d}$$

$$-\mathbf{n}_\mathrm{u} \cdot (-c\nabla u + \alpha u + \beta u)_\mathrm{u} = g_\mathrm{u} - q_{1\mathrm{u}} u_\mathrm{u} - q_{2\mathrm{u}} u_\mathrm{u} + (\mathbf{k}_\mathrm{u} \cdot \mathbf{n}_\mathrm{u}) u_\mathrm{u}$$

The g term may contain a general expression of the dependent variables. The q coefficients simplify the implementation of a *Robin boundary condition* by including a term on the form qu, where u is the dependent variable.

The red arrows in the **Graphics** window point toward the downside from the upside.

INCLUDE

By default, all check boxes are selected for the **Diffusive flux**, **Conservative convective flux**, and **Nonconservative convective flux** to include all flux components. You can use the Interior Flux/Source boundary condition in the Stabilized Convection-Diffusion Equation interface as an outflow condition (from a domain) by clearing the

Nonconservative convective flux and **Conservative convective flux** check boxes and as a supersonic outflow condition (from a domain) by clearing all check boxes so that the flux is computed from inside the domain.

BOUNDARY FLUX/SOURCE

Enter values or expressions for the values of the boundary flux or source g on the downside and upside in the associated text fields for g_{d} and g_{u} under **Downside** and **Upside**, respectively.

BOUNDARY ABSORPTION/IMPEDANCE TERM

Enter values or expressions for the values of the coefficient q and the components of the vector $\mathbf{k}$ on the downside and upside in the corresponding text fields under **Downside** and **Upside**, respectively. The addition of the qu terms to the boundary flux or source can represent absorption or impedance at the boundary.

Periodic Condition

The **Periodic Condition** node adds a *periodic boundary condition*. This periodicity can be continuous (the default) so that $u(x_0) = u(x_1)$ or antiperiodic so that $u(x_0) = -u(x_1)$ and can control to which dependent variables the periodic condition applies.

BOUNDARY SELECTION

	The software usually automatically identifies the boundaries as either source boundaries or destination boundaries, as indicated in the selection list. This works fine for cases like opposing parallel boundaries. In other cases, right-click **Periodic Condition** and add a Destination Selection subnode to control the destination. By default it contains the selection that COMSOL Multiphysics identifies.

PERIODIC CONDITION

Select a **Type of periodicity**: **Continuity** (the default) to make the dependent variables equal, or **Antiperiodicity** to make them antiperiodic: $u(x_0) = -u(x_1)$.

For each dependent variable in the PDE, choose to apply the periodic condition by selecting, for example, the **Apply condition on variable u1** check box. By default, the periodic condition applies to all dependent variables.

CONSTRAINT SETTINGS

To display this section, click the **Show More Options** button ( ) and select **Advanced Physics Options** in the **Show More Options** dialog box. This section contains settings for specifying the type of constraint and whether to use a pointwise or weak constraint. See Constraint Settings for more information.

ORIENTATION OF SOURCE

To display this section, click the **Show More Options** button ( ) and select **Advanced Physics Options** in the **Show More Options** dialog box. For information about the **Orientation of Source** section, see Orientation of Source and Destination.

	• Periodic Boundary Conditions • Working with Geometric Entities

Destination Selection

Right-click a Periodic Condition node to add the **Destination Selection** subnode and to change the selection for the destination. Depending on which COMSOL Multiphysics products your license includes, **Destination Selection** subnodes are also available under other nodes such as **Cell Periodicity>Boundary Pair**. This is the selection that COMSOL Multiphysics makes appear as the default selection in the **Selection** list (as **Explicit 1**, for example).

BOUNDARY SELECTION

You can only select destination boundaries from the union of all source and destination boundaries.

	The software usually automatically identifies the boundaries as either source boundaries or destination boundaries. By default it contains the selection that COMSOL Multiphysics identifies.

	• Periodic Boundary Conditions • Working with Geometric Entities

ORIENTATION OF DESTINATION

For information about the **Orientation of Destination** section, see Orientation of Source and Destination.

The PDE, Boundary Elements Interface

About Boundary Elements Interfaces

Physics interfaces based on the boundary element method (BEM) differs from those based on the finite element method (FEM) in that they only use mesh elements on the boundaries of the modeled regions (curves in 2D and surfaces in 3D). Physics interfaces based on BEM can be used for physics modeling in three types of volumetric regions: domains, finite voids, and an infinite void. Physics interfaces based on FEM only supports the domain type. COMSOL Multiphysics uses a direct method in the BEM formulation; that is, the boundary element method directly discretizes the field and flux at the boundaries.

Domains can contain a volumetric finite element mesh; however, the physics interfaces based on BEM only utilize the boundary elements of such domains. A volumetric finite element mesh can be used for FEM-based physics in combination with BEM-based physics. Finite voids and the infinite void cannot contain a volumetric finite element mesh, and the mesh generator will only generate boundary elements adjacent to such regions. Only BEM-based physics can be defined in finite voids and the infinite void.

Unlike FEM, which produces sparse system matrices, BEM leads to filled (dense) matrices when using a direct solver. This means that even though BEM uses less degrees of freedom, as compared to the corresponding FEM discretization of the domain, the memory requirements for using a direct solver grow faster with BEM than with FEM. The problem with handling potentially large filled matrices resulting from BEM is avoided in the physics interfaces based on BEM by using iterative solvers in combination with far-field approximations. These methods avoid explicitly constructing these large matrices. Iterative solvers with far-field approximations is the default setting; however, the options of using a direct solver and no far-field approximations are also available.

Finite and Infinite Voids

For modeling with BEM, a geometry model can have multiple domains and multiple finite voids. However, there can be only one infinite void. These voids are only available for the PDE, Boundary Element interfaces and other interfaces that use BEM.

- A *domain* corresponds to a finite region where the geometry model is of the type solid. The geometry in most models based on FEM consists of domains only.
- Any other finite region is a *finite void*. A finite void is a closed empty region, and it can be created as a geometric primitive of type curve (in 2D) or surface (in 3D), for example. You can also create it using a Boolean difference operation that subtracts a closed domain from the rest of the geometry.
- The infinite void is the single unbounded region surrounding the geometry model. The infinite void is always domain number 0. An error message, for example, that refers to `Domain 0` is then pointing to a possible problem in the infinite void.

If the model contains finite voids and an infinite void, those volumetric regions appear in the domain selection lists for BEM interfaces and in the **Selection List** window as **Finite void 1**, and so on, and as **Infinite void**. Finite voids have domain numbers –1, –2, and so on, corresponding to **Finite void 1**, **Finite void 2**, and so on. An error message, for example, that refers to `Domain -2` is then pointing to a possible problem in **Finite void 2**. The infinite void is always domain number 0. An error message, for example, that refers to `Domain 0` is then pointing to a possible problem in the **Infinite void**.

The PDE, Boundary Elements Interface Main Node

The **PDE, Boundary Elements** interface ( ), found under the **Mathematics>PDE Interfaces** branch ( ) when adding an interface, solves scalar stationary source-free PDEs in an unbounded domain.

This section covers the formulation and settings pertaining to those equations.

When you add this interface, these default nodes are also added to the **Model Builder**: **PDE, Boundary Elements**; **Zero Flux**; and **Initial Values**. Then, from the **Physics** toolbar, add other nodes that implement, for example, boundary conditions. You can also right-click the main **PDE, Boundary Elements** node to select features from the context menu.

Use the *PDE, Boundary Elements* for a first-order scalar Laplace equation. Assuming a dependent variable u, these problems take the form

$$-\nabla \cdot (c\nabla u) + au = 0$$

together with suitable initial data.

c is the diffusion coefficient, and a is the absorption coefficient. They must be constant within each modeling region.

The plots can plot the boundary element field (default name: `pdebe.u`) and the normal boundary flux (default name: `pdebe.bemflux`) on boundaries and also the boundary element field in all domains and voids.

SETTINGS

The **Label** is the default physics interface name.

The **Name** is used primarily as a scope prefix for variables defined by the physics interface. Refer to such physics interface variables in expressions using the pattern `<name>.<variable_name>`. In order to distinguish between variables belonging to different physics interfaces, the `name` string must be unique. Only letters, numbers, and underscores (_) are permitted in the **Name** field. The first character must be a letter.

The default **Name** (for the first PDE, Boundary Elements interface in the model) is `pdebe`.

DOMAIN SELECTION

Define the domains and voids in which the physics interface should be active. The list can include all solid domains and finite voids. By default, it also contains the infinite void. From the **Selection** list, you can choose **All domains**, **All voids**, or **All domains and voids**. All voids include all finite voids and the infinite void.

PHYSICS SYMBOLS

Select the **Enable physics symbols** check box to display the symmetry lines or planes in the geometry.

SYMMETRY

In this section you can specify if you want to include symmetry or antisymmetry along lines that are perpendicular to lines (in 2D) or planes in (3D).

In 2D, choose a symmetry option from the **Symmetry in line perpendicular to x** and **Symmetry in line perpendicular to y** lists. In 3D; choose a symmetry option from the **Symmetry in the yz plane**, **Symmetry in the xz plane**, or **Symmetry in the xy plane** lists. Choose one of the following options:

- **Off**, for no symmetry (the default)
- **Symmetric**
- **Antisymmetric**

UNITS

Select the **Dependent variable quantity** that defines the unit for the dependent variable u. The default is **Dimensionless** (with **1** in the **Unit** column). Click the **Select Dependent Variable Quantity** button ( ) to open the **Physical Quantity** dialog box to browse to find a physical quantity to use. You can also type a search string in the text field at the top of the dialog box and then click the **Filter** button ( ) to filter the list of physical quantities. For example, type `potential` and click the **Filter** button to only list physical quantities that represent some kind of potential. Alternatively, click the **Define Dependent Variable Unit** button ( ) to edit the unit directly in the **Unit** column, typing a unit to define the dependent variable quantity. The quantity column then contains **Custom unit**.

Select the **Source term quantity** that defines the unit for the source term f (the unit for the right — and left — side of the PDE). **Custom unit** is the default quantity (with **m^-2** in the **Unit** column). Click the **Select Source Term Quantity** button ( ) to open the **Physical Quantity** dialog box to browse to find a physical quantity to use. You can also type a search string in the text field at the top of the dialog box and then click the **Filter** button ( ) to filter the list of physical quantities. For example, type `potential` and click the **Filter** button to only list physical quantities that represent some kind of potential. Alternatively, click the **Define Source Term Unit** button ( ) to edit the unit directly in the **Unit** column, typing a unit (for example, `W/m^3` or `A/m^3`) to define the dependent variable quantity. The quantity column then contains **Custom unit**.

CONDITION AT INFINITY

In this section, you specify the condition to apply at infinity for an unbounded problem.

For the condition, choose **None** for no condition, **Laplace equation** (the default), or **Helmholtz equation** from the **Condition type** list.

For the Laplace equation, choose to specify either a **Total flux through boundary** (the default) or an **Asymptotic value at infinity** (3D only), or **Value at reference distance** (2D only) from the **Condition at infinity** list, unless there is an antisymmetric symmetry in the model, which acts as an added infinite ground plane or line with a fixed value of the dependent variable. The value at infinity is fixed to 0 by the presence of the infinite ground plane or line, so for this case there is a fixed **Zero value at infinity** condition (3D only) or **Zero value at reference distance** condition (2D only). Depending on the condition, enter a value in the **Total flux through boundary**, **Asymptotic value**, or **Reference value** field to define the condition at infinity.

For the Helmholtz equation, choose to specify an **Outgoing wave** (the default), an **Incoming wave**, or a **General** condition from the **Condition at infinity** list. If you choose **General**, enter a condition in the **m** field. In general, it might be possible to consider any linear combination of incoming and outgoing waves, and the **m** field allows specifying such general combinations. The values of **m** should be an real number between –1 and 1, with –1 corresponding to an outgoing wave, 1 corresponding to an incoming wave, and 0 corresponding to a standing wave (this is the case for interior problems).

FAR-FIELD APPROXIMATION SETTINGS

To display this section, click the **Show More Options** button ( ) and select **Advanced Physics Options** in the **Show More Options** dialog box.

These settings are used for matrix assembly and postprocessing. They allow characterization of interactions occurring in boundary element method into near-field and far-field interactions. While the near-field interactions are represented explicitly, the far-field interactions can be represented in an approximate way. This approach results in considerable memory and performance improvements when used in combination with iterative solvers using matrix-free format or during postprocessing. The near-field part of stiffness matrix is used as input by the Direct and Sparse Approximate Inverse preconditioners.

The **Use far-field approximation** check box is selected by default in order to accelerate the solution process. If the check box is cleared, the solution will be slightly more accurate but the computational time and memory consumption may become prohibitively high.

The **Approximation type** can be either **ACA+** or **ACA**. These alternatives correspond to two different versions of the adaptive-cross-approximation (ACA) method, which is a fast matrix multiplication method based on far-field approximations.

When the **Use far-field approximation** check box is selected, the **Stationary Solver** step in the study creates an octree structure, which is a tree data structure that divides the model into 2-by-2-by-2 blocks recursively until each of the smallest boxes contains at most the number of degrees of freedom specified in the **Box size splitting limit** field. The **Far-field minimum relative distance** decides if the interaction between two boxes occurs in the near field or far field. Boxes that interact in the near field at one level may also interact with a far-field approximation at a level with smaller boxes. Boxes at the smallest level that do not fulfill the far-field minimum relative distance criteria are considered to interact in the near field. For such boxes the system matrix that is defined by the integral equation and the elements in the two boxes are explicitly computed using no approximation. For two boxes that have been classified as interacting in the far field, an approximation of the resulting matrix is computed. The algorithm for computing the approximation rewrites the matrix defined by the interaction between the two boxes using a low-rank matrix approximation. The matrix rank for the approximation is chosen so that the relative error between the approximation and the actual matrix is estimated to be smaller than the value in the **Relative tolerance** field.

The ACA+ and ACA algorithms differ in the implementation of the fast matrix multiplication. The ACA+ algorithm is more robust but slightly more computationally expensive as compared to the ACA algorithm. If the **Use SVD compression** check box is selected, then after the ACA+ or ACA far-field approximation, a further approximation and data compression is made based on a singular value decomposition (SVD) algorithm. This additional data compression step reduces memory usage but increases computation time.

The damping parameter is related to the near field matrix that the preconditioner sees. By default, the **Use damping** check box is selected. The default value in the **Damping parameter** field is 1, and increasing this value increases the numerical damping. The parameter may impact the convergence of the solver but does not change the solution it converges to.

QUADRATURE

To display this section, click the **Show More Options** button ( ) and select **Advanced Physics Options** in the **Show More Options** dialog box.

The quadrature settings are by default set to **Automatic**. This means that the quadrature integration order values will follow the element order selection in the **Discretization** section. Higher element orders automatically generate higher values for the quadrature integration orders.

The quadrature integration order settings determine the level of accuracy of the computation of double integrals over the singular integral kernels that need to be evaluated for solving the BEM integral equations. For contributions from overlapping mesh element pairs (identical elements, elements sharing common edge, or elements with common vertex), specialized regularization transformations are applied before proceeding with numerical integration. For evaluation of contributions from nonoverlapping mesh element pairs, standard numerical integration is used. Due to the presence of singularities in the double integrals, higher integration order is needed for close mesh element pairs than for distant mesh element pairs. The following integration order settings are available when you select **Manual**:

Integration order, distant elements: Integration order for evaluating standard double integral BEM contributions from mesh pairs separated by a large distance relative to their size.

Integration order, close elements: Integration order for evaluating standard double integral BEM contributions from mesh pairs separated by a short distance relative to their size.

Integration order, elements with common vertex: Integration order for evaluating regularized double integral BEM contributions from mesh pairs with a common vertex.

Integration order, elements with common edge: Integration order for evaluating regularized double integral BEM contributions from mesh pairs with a common edge.

Integration order, same element: Integration order for evaluating regularized double integral BEM contributions from identical mesh pairs.

Integration order, weak contribution: Integration order for evaluating standard single integral BEM contributions. This integration does not contain any singularities.

DISCRETIZATION

From the **Dependent variable/Normal boundary flux** list, choose from predefined options for the boundary element discretization order for the dependent variable and the normal boundary flux, respectively. The predefined options represent the suitable combinations of element orders such as **Quadratic/Linear** (the default).

To display additional settings in this section, click the **Show More Options** button ( ) and select **Advanced Physics Options** in the **Show More Options** dialog box. The settings under **Value types when using splitting of complex variables** are important for sensitivity and optimization computations. See the description of the built-in operators `fsens` and `fsensimag`.

DEPENDENT VARIABLES

Define the name of the dependent variable. The default name is u.

!	The dependent variable and its name must be unique with respect to all other dependent variables in the model.

	Theory for the Boundary Elements PDE

Domain and Boundary Physics for the PDE, Boundary Elements Interface

The PDE, Boundary Elements Interface includes the following domain and boundary feature nodes:

- Dirichlet Boundary Condition
- Flux/Source
- Initial Values
- PDE, Boundary Elements
- Zero Flux

PDE, Boundary Elements

This is the equation for a **PDE, Boundary Elements** interface. Here the coefficients for the PDE using boundary elements are specified with the following equation coefficients:

$$-\nabla \cdot (c\nabla u) + au = 0$$

where c is the diffusion coefficient and a is the absorption coefficient.

COEFFICIENTS

Enter a value or expression for the **Diffusion coefficient** c and the **Absorption coefficient** a.

PHYSICS SYMBOLS

This section is visible if the **Enable physics symbols** check box is selected in the Settings window for the main **PDE, Boundary Elements** node. Select or clear the **Show physics symbols** check box to turn the display of symmetry lines or planes on and off.

Initial Values

The **Initial Values** node adds the initial value for the dependent variable to be specified. It serve as an initial condition for a nonlinear simulation.

DOMAIN SELECTION

	If there is more than one type of domain, each with different initial values defined, it may be necessary to remove these domains from the selection. These are then defined in an additional **Initial Values** node.

INITIAL VALUES

Enter a value or expression for the **Dependent variable** u. The default value is 0.

Zero Flux

The **Zero Flux** boundary condition is the default boundary condition and prescribes a zero flux across the boundary:

$$-\mathbf{n} \cdot (c\nabla u) = 0 .$$

It can be used on exterior boundaries only.

Dirichlet Boundary Condition

The **Dirichlet Boundary Condition** specifies a value of u on the boundary of the domain: $u = r$. By default, it is a unidirectional condition, applying reaction terms on u but not on any variables appearing in r.

DIRICHLET BOUNDARY CONDITION

Enter the value or expression for r to specify the condition on u on the boundary.

CONSTRAINT SETTINGS

To display this section, click the **Show More Options** button ( ) and select **Advanced Physics Options** in the **Show More Options** dialog box. This section contains settings for specifying the type of constraint and whether to use a pointwise or weak constraint. See Constraint Settings for more information.

Flux/Source

The **Flux/Source** boundary condition can be used on exterior boundaries only. With this node, the boundary condition is enforced according to:

$$-\mathbf{n} \cdot (c\nabla u) = g$$

where g can be specified. Here the dependent variable u in the right-hand side is evaluated on the inside (as seen from the domain where the PDE interface is defined). When the normal vector is used in expressions for curved

boundaries, it is important that the mesh version of these vectors is used. The components of this vector are denoted `nxmesh`, `nymesh`, and `nzmesh`, respectively.

	In this context, exterior means exterior to the PDE interface, which does not need to be an exterior boundary to the geometry. On such boundaries, the normal direction as defined by the normal vector variables does not necessarily have to be outward pointing.

BOUNDARY FLUX/SOURCE

Enter the flux term g.

Theory for the Boundary Elements PDE

About the Boundary Element Method

The ***boundary element method*** (BEM) is a numerical computational method of solving linear partial differential equations that have been formulated as integral equations. The boundary element method is complementary to the finite element method (FEM), which most of the other PDE interfaces are based on. The boundary element method is sometimes more efficient than other methods, including finite elements, in terms of computational resources for problems where there is a small surface-to-volume ratio. In other cases, the boundary element method is more convenient in setting up a problem. For general information about the boundary element method in addition to this section, see Ref. 1.

Physics interfaces based on the boundary element method (BEM) differs from those based on the finite element method (FEM) in that they only use mesh elements on the boundaries of the modeled regions (curves in 2D and surfaces in 3D). Physics interfaces based on BEM can be used for modeling in three types of volumetric regions: domains, finite voids, and an infinite void. Physics interfaces based on FEM only supports the domain type.

For modeling with BEM, a geometry model may have multiple domains and multiple finite voids. However, there can be only one infinite void. For more information on domains and voids, see Finite and Infinite Voids.

Unlike FEM, which produces sparse system matrices, BEM leads to filled (dense) matrices when using a direct solver. This means that even though BEM uses less degrees of freedom, as compared to the corresponding FEM discretization of the domain, the memory requirements for using a direct solver grow faster with BEM than with FEM. The problem with handling potentially large filled matrices resulting from BEM is avoided in the physics interfaces based on BEM by using iterative solvers in combination with far-field approximations. These methods avoid explicitly constructing these large matrices. Iterative solvers with far-field approximations is the default setting; however, the options of using a direct solver and no far-field approximations are also available.

The interfaces based on BEM solve the following version of Laplace's equation:

$$-\nabla \cdot (c\nabla u) = 0 \text{ in } \Omega$$

where the diffusion coefficient c has the additional requirement, as compared to FEM, that it has to be a constant within each modeling region.

To keep derivations simpler, for the remainder of this section assume that $c = 1$ and, unless otherwise specified, that Ω is a finite region (domain or finite void):

$$-\nabla \cdot (\nabla u) = 0 \text{ in } \Omega$$

The Fundamental Solution to Laplace's Equation

Consider the ***fundamental solution*** to the Laplace operator:

$$G(x-y) = \frac{1}{4\pi|x-y|} \text{ in 3D}$$

and

$$G(x-y) = -\frac{1}{2\pi}\log|x-y| \text{ in 2D}$$

where the variables x and y represent coordinate positions in space $x = (x_1,x_2,x_3)$ and $y = (y_1,y_2,y_3)$.

The fundamental solution has the following property:

$$-\nabla \cdot \nabla G(x-y) = \delta(x-y) \quad \text{in } \Omega$$

where the derivatives are taken with respect to x and δ is the Dirac delta distribution.

The Dirac delta has the property that when used in an integral it samples the value of a function f at y:

$$\int_{\Omega} f(x)\delta(x-y)dV = f(y)$$

Derivation of the Boundary Integral Representation of the Solution to Laplace's Equation

Similar to when deriving the weak form, multiply Laplace's equation with a test function υ and integrate by parts:

$$\int_{\Omega} (-\nabla \cdot (\nabla u))\upsilon dV = \int_{\Omega} \nabla u(\nabla \upsilon)dV - \int_{\partial\Omega} \upsilon(n \cdot \nabla u)dA$$

Repeat with the roles of u and υ reversed:

$$\int_{\Omega} (-\nabla \cdot (\nabla \upsilon))u dV = \int_{\Omega} \nabla \upsilon(\nabla u)dV - \int_{\partial\Omega} u(n \cdot \nabla \upsilon)dA$$

Now subtract the first equation from the second equation and collect terms:

$$\int_{\Omega} (-u(\nabla \cdot \nabla \upsilon) + \upsilon(\nabla \cdot \nabla u))dV = \int_{\partial\Omega} (-u(n \cdot \nabla \upsilon) + \upsilon(n \cdot \nabla u))dA$$

This relationship is known as Green's second identity.

Now, use the fundamental solution by setting:

$$\upsilon(x) = G(x-y)$$

with integration over x:

$$\int_{\Omega} (-u(\nabla \cdot \nabla G(x-y)) + G(x-y)(\nabla \cdot \nabla u))dV = \int_{\partial\Omega} (-u(n \cdot \nabla G(x-y)) + G(x-y)(n \cdot \nabla u))dA$$

Using the property of the fundamental solution gives, for the first term in the volume integral:

$$\int_{\Omega} u(-\nabla \cdot \nabla G(x-y))dV = \int_{\Omega} -u\delta(x-y)dV = u(y)$$

For the second term of the volume integral, since u is assumed to be a solution to Laplace's equation $-\nabla \cdot (\nabla u) = 0$:

$$\int_{\Omega} G(x-y)\nabla \cdot \nabla u dV = \int_{\Omega} G(x-y)0dV = 0$$

The resulting relationship is known as the representation of u in terms of boundary integrals:

$$u(y) = -\int_{\partial\Omega} u(n \cdot \nabla G(x-y))dA + \int_{\partial\Omega} G(x-y)(n \cdot \nabla u)dA \text{ for } y \text{ inside } \Omega.$$

The value of u over the entire domain Ω is thus determined completely by the values of u and the flux $n \cdot \nabla u$ on the boundary. The integrals are not singular anywhere inside Ω since the integral for each y is taken over x on the

boundary where $x \neq y$. Furthermore, note that this relationship is not an equation but merely a representation of u when we already know the solution and the flux on the boundary. Indeed, this representation is used to reconstruct the solution anywhere inside Ω once the field and flux are solved for and known on the boundary.

The representation of u can be written more compactly as:

$$u = -D(u) + S(\partial_n u) \text{ in } \Omega$$

where $\partial_n u = n \cdot \nabla u$.

The integral operator

$$S(\partial_n u) = \int_{\partial\Omega} G(x-y)\partial_n u dA$$

is called the single-layer volume potential.

The integral operator

$$D(u) = \int_{\partial\Omega} u\partial_n G(x-y)dA$$

is called the double-layer volume potential.

Derivation of the Boundary Integral Equations

In order to derive the *boundary integral equations* used in BEM, you take the limit of the volume potential operators as they approach the boundary. This limit process is nontrivial since on the boundary the integrals are evaluated for $x \neq y$. The limit process is represented by a *trace operator* γ_0. In addition, the normal derivative trace operator $\gamma_1 = \gamma_0\partial_n$ is needed.

Operating with the trace operator γ_0 on the (volume) representation for u gives:

$$\gamma_0 u = -\gamma_0 D(u) + \gamma_0 S(\partial_n u) \text{ on } \partial\Omega$$

where $\gamma_0 u = u$ on $\partial\Omega$ (the trace of u is u).

The boundary integral operator

$$V(\partial_n u) = \gamma_0 S(\partial_n u)$$

is called the *single-layer boundary potential* and has the same form as its corresponding volume potential:

$$S(\partial_n u) = \int_{\partial\Omega} G(x-y)\partial_n u dA \text{ on } \partial\Omega$$

Define the *double-layer boundary potential* operator as:

$$K(u) = \int_{\partial\Omega} u\partial_n G(x-y)dA \text{ on } \partial\Omega$$

The relationship between the volume and boundary versions of the double-layer potential operator is nontrivial:

$$\gamma_0 D(u) = K(u) - \frac{u}{2}$$

where the additional term comes from, roughly speaking, "cutting the singularity in half" on the boundary. This results in the following boundary integral equation for u:

$$u = \left(\frac{1}{2}I - K\right)u + \nabla\psi \text{ on } \partial\Omega$$

where, in order to simplify the notation,

$$\psi = \partial_n u = n \cdot \nabla u$$

is used for the normal flux. In addition, operator notation is here used, for example, $K(u) = Ku$.

In the COMSOL Multiphysics implementation of BEM, the normal flux ψ is represented as a dependent variable alongside u.

To derive a boundary integral equation for ψ, operate with the trace operator $\gamma_1 = \gamma_0\partial_n$ on the representation for u:

$$\gamma_1 u = \psi = -\gamma_1 D(u) + \gamma_1 S(\psi) \text{ on } \partial\Omega$$

Define the adjoint double-layer boundary potential operator as:

$$K'(\psi) = \int_{\partial\Omega} \partial_n G(x-y)\psi dA \text{ on } \partial\Omega$$

Again, the relationship between the volume and boundary potential operators is nontrivial as follows:

$$\gamma_1 S(\psi) = K'(u) + \frac{\psi}{2} \text{ on } \partial\Omega .$$

Define the hypersingular integral operator as:

$$W(u) = -\gamma_1 D(u) = -\partial_n \int_{\partial\Omega} \partial_n G(x-y) u dA \qquad \text{on } \partial\Omega$$

This results in the following boundary integral equation for ψ:

$$\psi = Wu + \left(K' + \frac{1}{2}I\right)\psi \text{ on } \partial\Omega .$$

The Weak Form Implementation of the Boundary Integral Equations

The boundary equation system

$$u = \left(\frac{1}{2}I - K\right)u + \nabla\psi \text{ on } \partial\Omega$$

$$\psi = Wu + \left(K' + \frac{1}{2}I\right)\psi \text{ on } \partial\Omega$$

in the unknowns u and ψ is known as the *Calderon identities.*

In order to get a systematic treatment of both the solution and the flux on the boundary, these equations are implemented using a weak formulation. This also allows for simultaneous handling of Dirichlet and Neumann boundary conditions.

To derive a weak formulation for this equation system, the boundary part of Green's second identity (see above) can be used with test function υ:

$$\int_{\partial\Omega} -u(n \cdot \nabla\upsilon) + \upsilon(n \cdot \nabla u)dA = 0$$

Focusing on the boundary equation and using the notations $\upsilon = u_{\text{test}}$, $\psi = n \cdot \nabla u$, $\psi_{\text{test}} = n \cdot \nabla\upsilon$ we get:

$$\int_{\partial\Omega} -u\psi_{\text{test}} + \psi u_{\text{test}} dA = 0$$

Using the Calderon identities gives:

$$\int_{\partial\Omega} -\left(\left(\frac{1}{2}I - K\right)u + \nabla\psi\right)\psi_{\text{test}} + \left(Wu + \left(K' + \frac{1}{2}I\right)\psi\right)u_{\text{test}} dA = 0$$

In the actual implementation the terms are rather collected in the right-hand side with the induced change of signs.

This formulation is one of several possible ways to formulate weak equations for BEM. It is known as *Costabel's symmetric coupling* and has advantages with respect to enforcing solution continuity and flux balance on boundaries for coupling BEM with FEM.

ASYMPTOTIC CONDITIONS

In the case of unbounded domains the representation of u in terms of single and double layer needs to be modified to take into account for possible contributions from the far-field boundary. For Laplace's equation these contributions will give rise to a constant additive term

$$u = -D(u) + S(\partial_n u) + u_{\text{const}} \text{ in } \Omega$$

In 3D the fundamental solution for the Laplace operator and its derivatives approaches 0 for the point approaching infinity and therefore the first two terms will vanish. Consequently u_{const} can be interpreted as an asymptotic value of the solution at infinity. In 2D the first two terms do not vanish when approaching infinity due to the logarithmic nature of fundamental solutions and therefore the value of u_{const} cannot be interpreted in the same way.

In both 2D and 3D one needs to specify this constant term either directly by specifying its value or indirectly by setting a constraint on the total flux through the boundary in order to uniquely determine the solution.

Reference

1. M. Costabel, *Principles of Boundary Element Methods*, Technische Hochschule Darmstadt, 1986. Available from https://perso.univ-rennes1.fr/martin.costabel/publis/Co_PrinciplesBEM.pdf

The Wave Form PDE Interface

The **Wave Form PDE (wahw)** interface ( ), found under the **Mathematics>PDE Interfaces** branch ( ) when adding an interface, solves wave equations formulated with first order derivatives in time and space using the discontinuous Galerkin method and is highly optimized with respect to speed and memory consumption.

This section covers the formulation and settings pertaining to those equations.

When you add this interface, these default nodes are also added to the **Model Builder**: **Wave Form PDE**, **Zero Flux**, and **Initial Values**. Then, from the **Physics** toolbar, add other nodes that implement, for example, boundary conditions. You can also right-click **Wave Form PDE** to select features from the context menu.

Use the *wave form* for first-order hyperbolic PDEs. Assuming a scalar equation for the dependent variable u, these problems take the form

$$d_a\frac{\partial u}{\partial t} + \nabla \cdot \Gamma = f \quad \text{in } \Omega$$
$$-\mathbf{n} \cdot \Gamma = g \quad \text{on} \partial\Omega$$

together with suitable initial data. The first equation is the PDE, the second the boundary conditions.

The terms d_a, Γ, f, and g are coefficients. They can be functions of both the spatial coordinates or time, and the solution u, but not the derivatives of u. The coefficients f and g are scalar, whereas Γ is the *flux vector*. The coefficient d_a is assumed to be nonzero throughout the domain Ω, and for all times.

	The **Wave Form PDE** interface also supports systems of equations. The interpretation of the coefficients are the same as for the scalar case; f and g are vectors with one component for each equation. Γ contains one flux vector for each equation, and d_a is a square (invertible) matrix.

SETTINGS

The **Label** is the default physics interface name.

The **Name** is used primarily as a scope prefix for variables defined by the physics interface. Refer to such physics interface variables in expressions using the pattern `<name>.<variable_name>`. In order to distinguish between variables belonging to different physics interfaces, the `name` string must be unique. Only letters, numbers, and underscores (_) are permitted in the **Name** field. The first character must be a letter.

The default **Name** (for the first Wave Form PDE interface in the model) is `wahw`.

UNITS

Select the **Dependent variable quantity** that defines the unit for the dependent variable u. The default is **Dimensionless** (with **1** in the **Unit** column). Click the **Select Dependent Variable Quantity** button ( ) to open the **Physical Quantity** dialog box to browse to find a physical quantity to use. You can also type a search string in the text field at the top of the dialog box and then click the **Filter** button ( ) to filter the list of physical quantities. For example, type `potential` and click the **Filter** button to only list physical quantities that represent some kind of potential. Alternatively, click the **Define Dependent Variable Unit** button ( ) to edit the unit directly in the **Unit** column, typing a unit to define the dependent variable quantity. The quantity column then contains **Custom unit**.

Select the **Source term quantity** that defines the unit for the source term f (the unit for the right — and left — side of the PDE). **Custom unit** is the default quantity (with **m^-2** in the **Unit** column). Click the **Select Source Term Quantity** button ( ) to open the **Physical Quantity** dialog box to browse to find a physical quantity to use. You can also type a search string in the text field at the top of the dialog box and then click the **Filter** button ( ) to filter

the list of physical quantities. For example, type `potential` and click the **Filter** button to only list physical quantities that represent some kind of potential. Alternatively, click the **Define Source Term Unit** button ( ) to edit the unit directly in the **Unit** column, typing a unit (for example, `W/m^3` or `A/m^3`) to define the dependent variable quantity. The quantity column then contains **Custom unit**.

DISCRETIZATION

Due to efficiency reasons, there is only one **Shape function type** (finite element type) defined for this interface — the **Nodal discontinuous Lagrange** functions. The associated element order (the order of the shape function for the element) can be chosen from the **Element order** list. The highest available order is 10 in 1D and 2D models and 7 in 3D models, and the default order is two.

To display additional settings in this section, click the **Show More Options** button ( ) and select **Advanced Physics Options** in the **Show More Options** dialog box.

DEPENDENT VARIABLES

Define the number of the dependent variables and the variable names. The default name for a scalar PDE variable is u.

!	The dependent variables and their names must be unique with respect to all other dependent variables in the model.

Add or remove dependent variables in the model and also change their names.

Enter the **Number of dependent variables**. Use the **Add dependent variable** ( ) and **Remove dependent variable** ( ) buttons as needed.

	• Domain and Boundary Physics for the Wave Form PDE Interface • Working with Geometric Entities • Theory for the Wave Form PDE • The Time Explicit Solver Algorithms • Using Units

Domain and Boundary Physics for the Wave Form PDE Interface

About Auxiliary Equation-Based Nodes includes the following domain and boundary feature nodes:

- Flux/Source
- Initial Values
- Interior Flux
- Interior Flux Split
- Interior Source
- Wave Form PDE
- Zero Flux

Wave Form PDE

This is the default equation for a **Wave Form PDE** interface. Here the coefficients for a wave form PDE are specified with the following equation coefficients:

$$d_a \frac{\partial u}{\partial t} + \nabla \cdot \Gamma(u) = f$$

- d_a is the mass coefficient
- $\Gamma(u)$ is the conservative flux vector
- f is the source term

DAMPING OR MASS COEFFICIENT

Enter a value or expression for the damping (or mass) coefficient d_a. The default is 1. If there are multiple dependent variables, there is a matrix of d_a component inputs.

CONSERVATIVE FLUX

Enter values or expressions for the components of the conservative flux vector $\Gamma(u)$. These components may depend on both the spatial and temporal coordinates, and the solution u, but not any derivatives of u. If there are multiple dependent variables, there is one $\Gamma(u)$ vector for each variable.

SOURCE TERM

Enter a value or expression for the source term f. If there are multiple dependent variables, there is a vector of f component inputs.

NUMERICAL FLUX

The shape functions used are discontinuous and therefore require auxiliary constraints on faces between adjacent mesh elements to yield a meaningful (that is, continuous) solution approximation. This is accomplished by specifying a so-called numerical flux on each face. The numerical flux implemented is the (global) Lax-Friedrichs flux, which is defined as the average of the fluxes on neighboring elements plus the jump of the solution times at parameter τ, which is necessary for stability. You can also specify a general numerical flux. From the **Method** list, choose **Lax-Friedrichs** (the default) to specify parameter τ, or choose General to specify a general numerical flux g^*.

For Lax-Friedrichs, enter a value or global expression for the parameter τ. Only one expression can be entered for each equation and each domain. The parameter is by default one but should be set according to the dominant eigenvalue of the flux Jacobian matrix

$$\bar{\lambda} = \max\left|\lambda\left(d_a^{-1}\left(\mathbf{n} \cdot \frac{\partial \Gamma}{\partial u}\right)\right)\right| \tag{16-11}$$

given the bound

$$0 \le \tau \le \frac{\bar{\lambda} \max|\lambda(d_a)|}{2} \tag{16-12}$$

where $\lambda(d_a)$ are the eigenvalues of the mass matrix d_a. The reason for this extra factor is that the mass matrix inverse is applied to the Lax-Friedrichs flux internally. A so-called *central flux* is obtained for $\tau = 0$. Selecting

$$\tau = \frac{\bar{\lambda} \max|\lambda(d_a)|}{2}$$

sets a maximally dissipative global Lax-Friedrichs flux.

Derivation of the Weak Form of the Wave Form PDE

ESTIMATE OF MAXIMUM WAVE SPEED

Enter a value or expression for the estimate of maximum wave speed W_s. The default is 0.

FILTER PARAMETERS

The filter provides higher-order smoothing of nodal discontinuous Galerkin formulations and is intended to be used for absorbing layers, but you can also use it to stabilize linear wave problems with highly varying coefficients. The filter is constructed by transforming the solution (in each global time step) to an orthogonal polynomial representation, multiplying with a damping factor and then transforming back to the (Lagrange) nodal basis. Select the **Activate** check box to use this filter.

The exponential filter can be described by the matrix formula

$$V\Lambda V^{-1}$$

where V is a Vandermonde matrix induced by the node points, and Λ is a diagonal matrix with the exponential damping factors on the diagonal:

$$\Lambda_{mm} = \sigma(\eta) = \begin{cases} 1, 0 \le \eta \le \eta_c \\ e^{-\alpha\left(\frac{\eta - \eta_c}{1 - \eta_c}\right)^{2s}}, \eta_c \le \eta \le 1 \end{cases}$$

where

$$\eta = \eta(m) = \frac{i_m}{N_p}$$

and N_p is the basis function and i_m the polynomial order for coefficient m. α (default value: 36), η_c (default value: 0.6), and s (default value: 3) are the filter parameters that you specify in the corresponding text fields. The damping is derived from a spatial dissipation operator of order $2s$. For $s = 1$, you obtain a damping that is related to the classical 2nd-order Laplacian. Higher order (larger s) gives less damping for the lower-order polynomial coefficients (a more pronounced low-pass filter), while keeping the damping property for the highest values of η, which is controlled by α. The default values 36 for α correspond to maximal damping for $\eta = 1$. It is important to realize that the effect of the filter is influenced by how much of the solution (energy) is represented by the higher-order polynomial coefficients. For a well-resolved solution this is a smaller part than for a poorly resolved solution. The effect is stronger for poorly resolved solutions than for well-resolved ones. This is one of the reasons why this filter is useful in an absorbing layer where the energy is transferred to the higher-order coefficients through a coordinate transformation. See Ref. 1 (Chapter 5) for more information.

α must be positive; $\alpha = 0$ means no dissipation, and the maximum value is related to the machine precision, $-\log(\varepsilon)$, which is approximately 36. η_c should be between 0 and 1, where $\eta_c = 0$ means maximum filtering, and $\eta_c = 1$ means no filtering, even if filtering is active.

LIMITER

If desired, you can add a WENO (weighted essentially nonoscillatory) limiter (see The WENO Limiter) to control spurious oscillations around discontinuities and stabilize the computations. From the **Limiter** list, choose **WENO** to activate the WENO limiter. You can then also activate the TVB (total variation bounded) trouble cell indicator by choosing TVB from the **Troubled cell indicator** list and specify a TVB constant (default: 10). A larger value means that a smaller number of cells will use WENO.

Initial Values

The **Initial Values** node adds the initial values for the dependent variables to be specified. These serve as an initial condition for the transient simulation.

DOMAIN SELECTION

	If there is more than one type of domain, each with different initial values defined, it may be necessary to remove these domains from the selection. These are then defined in an additional **Initial Values** node.

INITIAL VALUES

Enter a value or expression for the **Initial value for u** u

Zero Flux

The **Zero Flux** boundary condition is the default boundary condition and prescribes a zero flux across the boundary:

$$-\mathbf{n} \cdot \Gamma = 0 \, .$$

It can be used on exterior boundaries only.

Flux/Source

The **Flux/Source** boundary condition can be used on exterior boundaries only. With this node, the boundary condition is enforced according to:

$$-\mathbf{n} \cdot \Gamma = g + qu$$

where g and q can be specified. Here the dependent variable u in the right-hand side is evaluated on the inside (as seen from the domain where the PDE interface is defined). When the normal vector is used in expressions for curved boundaries, it is important that the mesh version of these vectors is used. The components of this vector are denoted `nxmesh`, `nymesh`, and `nzmesh`, respectively.

	In this context, exterior means exterior to the PDE interface, which does not need to be an exterior boundary to the geometry. On such boundaries, the normal direction as defined by the normal vector variables does not necessarily have to be outward pointing.

BOUNDARY FLUX/SOURCE

Enter the flux term g.

BOUNDARY ABSORPTION/IMPEDANCE TERM

Enter the absorption or impedance term q.

Interior Flux

The **Interior Flux** boundary condition can be used on interior boundaries only. With this node, the boundary condition is enforced according to:

$$-\mathbf{n} \cdot \Gamma = g$$

where g can be specified. Here, $\mathbf{n}$ is outward normal seen from the downside, so it should be read as $-\mathbf{n}\cdot\Gamma = g$ for a downside of an interior boundary and as $-\mathbf{n}\cdot\Gamma = -g$ on the upside of an interior boundary. If a dependent variable is used in this expression (without `up` or `down` operators), an implicit mean operation is invoked taking the average of the up and down values.

To appreciate how this boundary condition works, consider a simple example of a one-way transport equation in 1D

$$u_t + a u_x = 0$$

with appropriate initial data and boundary conditions, and where the parameter $a > 0$ jumps (it is a discontinuous function of x) at an internal interface.

The proper upwind numerical flux condition is not obtained by using the internal Lax-Friedrichs flux. It can be shown that this is obtained by the numerical flux

$$\begin{aligned} n\cdot\Gamma^* &= \frac{1}{a^l + a^r}(a^l n\cdot\Gamma^r + a^r n\cdot\Gamma^l + a^l a^r (u^l - u^r)) \\ &= \frac{a^r a^l}{a^l + a^r} n((u^r + u^l) + (n u^l - n u^r)) \end{aligned}$$

where ^{r} and ^{l} denote the right and left side of the interface, respectively.

Since the downside coincides with the left side in 1D ($n = 1$), this condition can be expressed by setting

```
g=-2*down(a)*up(a)*down(u)/(down(a)+up(a))
```

In general and in higher dimensions, one typically needs the down (and up) versions of the mesh normal to express these conditions. For example, when the sign of the normal is unknown (that is, which side of an interface COMSOL Multiphysics considers the upside an downside), the above condition can be entered as

```
g = -down(a)*up(a)/(down(a)+up(a))*dnx*(up(u)+down(u)+dnx*(down(u)-up(u)))
```

Here `dnx` means the downside normal (`dnx=-unx`).

It is important to use the mesh version of this vector in higher dimensions on curved boundaries. For example, `dnxmesh`, `dnymesh`, and `dnzmesh` denotes the x, y, and z components of the mesh normal vector on the downside.

BOUNDARY SELECTION

Only interior boundaries can be selected. See Working with Geometric Entities.

BOUNDARY FLUX/SOURCE

Enter the flux term g (SI unit: 1/m).

Interior Flux Split

The **Interior Flux Split** boundary condition can be used on interior boundaries only. Compared to the **Interior Flux** node, the **Interior Flux Split** node makes it possible to specify the numerical flux separately on the upside and downside of the interior boundary. With this node, the boundary condition is enforced according to:

$$\begin{aligned} -\mathbf{dn}\cdot\Gamma_\mathrm{d} &= g_\mathrm{d} \\ -\mathbf{du}\cdot\Gamma_\mathrm{u} &= -g_\mathrm{u} \end{aligned}$$

where g_d and g_u can be specified as the flux on the downside and the upside, respectively. Here, $\mathbf{dn}$ is the outward normal from the downside, and $\mathbf{du}$ is the outward normal from the upside.

BOUNDARY SELECTION

Only interior boundaries can be selected. See Working with Geometric Entities.

INTERIOR FLUX DOWNSIDE

Enter the downside flux term g_d (SI unit: 1/m).

INTERIOR FLUX UPSIDE

Enter the upside flux term g_u (SI unit: 1/m).

Interior Source

The **Interior Source** boundary condition can be used on interior boundaries only. With this node, the boundary condition is enforced according to:

$$-\mathbf{n} \cdot \Gamma = -\mathbf{n} \cdot \langle \Gamma \rangle + g$$

where $\langle \Gamma \rangle$ is the mean flux computed internally. Here the source g can be specified.

BOUNDARY FLUX/SOURCE

Enter the flux term g.

Theory for the Wave Form PDE

About Auxiliary Equation-Based Nodes theory is described in this section.

Derivation of the Weak Form of the Wave Form PDE

Using About Auxiliary Equation-Based Nodes it is possible to solve one or several first-order wave equations; that is, PDEs of the form

$$d_a \frac{\partial u}{\partial t} + \nabla \cdot \Gamma(u) = f \tag{16-13}$$

where u is the unknown, d_a the mass coefficient, f the source, and Γ the flux vector, which generally depends on u.

The numerical method consists of a discontinuous Galerkin method in space in combination with explicit Runge-Kutta time stepping. This combination of space and time discretization is particularly well-suited for wave problems due to a favorable CFL condition. This is true even when using a high-order polynomial ansatz for u.

In order to derive the weak form underlying the DG method, let $\{\Omega^e\}$ denote a mesh of the domain $\{\Omega\}$, with Ω^e denoting a single element. On this mesh, let V be the broken space

$$V = \oplus P^s(\Omega^e)$$

with P^s denoting the space of all polynomials of degree at most s on Ω^e.

These functions are continuous in the interior of each mesh element, but generally discontinuous across the element boundaries.

A basis for V is given by the nodal discontinuous Lagrange shape functions `shhwdisc` (see Discontinuous Lagrange (shdisc) and Nodal Discontinuous Lagrange Elements (shhwdisc) in the *COMSOL Multiphysics Programming Reference Manual*. This basis is tailor made for this type of discontinuous Galerkin method, and it has nearly optimal interpolation properties.

The starting point for deriving a weak form is to multiply the PDE with a test function $v \subset V$ and integrate over the domain, to yield

$$\int_\Omega d_a \frac{\partial u}{\partial t} v dA + \int_\Omega \nabla \cdot \Gamma v dA = \int_\Omega f v dA$$

The next step is to integrate by parts. Some care must be taken, since the integrands v and u are discontinuous functions across element boundaries and only continuous in the interior of each element. Therefore, the integrals are first written as a sum over the elements and then integration by parts is done on each element, which gives

$$\sum_e \int_{\Omega^e} d_a \frac{\partial u}{\partial t} v dA - \sum_e \int_{\Omega^e} (\Gamma \cdot \nabla v) dA + \sum_e \int_{\partial\Omega^e} (\mathbf{n} \cdot \Gamma^*) g v ds = \sum_e \int_{\Omega^e} f v dA$$

where $\mathbf{n}$ is the outward unit normal on the element. Further, Γ^* is the so-called numerical flux, which defines the flux vector on each element boundary. The flux vector is usually discontinuous because it depends on u.

The numerical flux defines how adjacent elements are connected and how continuous u is. Different definitions of the numerical flux lead to different variants of discontinuous Galerkin methods.

The numerical flux implemented in COMSOL Multiphysics is the global Lax-Friedrichs flux:

$$\Gamma^* = \langle \Gamma \rangle + \tau[u]$$

where the angles $\langle\ \rangle$ and brackets $[\ ]$ are the average and jump operators, respectively. Thus, on each element boundary, this flux is simply the average of the flux on the two adjacent elements sharing the face, plus a penalty on any jumps of the solution. The penalty is needed for stability and is proportional to the parameter τ, which is assumed to be constant over the whole domain Ω. The normal vector $\mathbf{n}$ is a, from the element, outward pointing normal vector. The jumps are defined as

$$[u] = \mathbf{n}_- u_- + \mathbf{n}_+ u_+ = \mathbf{n} u_- - \mathbf{n} u_+$$

where u_- is the inside values and u_+ is the outside value. So it is the element's value minus the other element's value. The multiplication is an outer product in the case of a vector quantity $\mathbf{u}$.

Using the definition of the Lax-Friedrichs flux, the weak form is obtained

$$\sum_e \int_{\Omega^e} d_a \frac{\partial u}{\partial t} v dA - \sum_e \int_{\Omega^e} (\Gamma \cdot \nabla v) dA + \sum_e \int_{\partial\Omega} (\mathbf{n} \cdot \langle \Gamma \rangle + \tau[u]) g v ds = \sum_e \int_{\Omega} f v dA$$

It is also possible to specify a general numerical flux g.

What makes this discontinuous Galerkin method particularly attractive for explicit time stepping is the fact that the term

$$d_a \frac{\partial u}{\partial t}$$

yields a block diagonal mass matrix, where each block only involves the degrees of freedom on each element. As a consequence, there is no need to invert or solve any linear system involving the global mass matrix. The inverse of the global mass matrix simply amounts to inverting the local mass matrix on each element. This is efficiently done using high performance routines such as BLAS or LAPACK.

A known drawback with explicit time stepping is the requirement on the time step, which has to be very small in order to obtain a stable numerical method. This is referred to as the CFL condition, which relates the largest possible time step k to the smallest mesh size h. For wave equations with unit wave speed, the CFL condition takes the form

$$k \le C \frac{h}{\mathrm{p}^2}$$

where p is the order of the shape functions and C a generic constant, typically 0.25.

As implemented in COMSOL Multiphysics, the *nodal discontinuous Lagrange shape functions* are the only set of shape functions defined for this interface. The associated element order can be chosen from the **Element order** list. The highest available order is four, and the default order is two.

See Discretization as defined for About Auxiliary Equation-Based Nodes.

Time Explicit Integrator

After discretization in space, an explicit ordinary system of differential equations is obtained. The standard procedure is to integrate the DG system of equations with the explicit Runge-Kutta family of methods.

The combination is in the literature denoted RK-DG. Often, a p+1 order RK method is combined with p:th order shape functions. See Ref. 1 for details. The new integrator supports a CFL-based time step regulator. The stability limitation for the time step k is of the sort

$$k \leq \frac{C}{(1+2\mathrm{p})^2} \min \frac{h}{\left|\lambda\left(\frac{\partial \Gamma}{\partial u}\right)\right|}$$

where C is a moderate constant.

COMSOL Multiphysics can compute the largest time step k based on the smallest mesh size h, the order of the shape functions, and the maximum wave speed in the domain. Under **Time stepping**, select **From expressions** to automatically compute the largest stable time step k. Under **Cell time scale expressions** add `wahw.wtc` as the variable for the **Estimate of Maximum Wave Speed** when using About Auxiliary Equation-Based Nodes.

- Time Explicit Solver
- Introduction to Solvers and Studies

Local Time Stepping

The time step restriction is directly proportional to the smallest mesh element size. The CFL condition is normally too restrictive on highly graded meshes. On such a mesh, it is common that only few elements are small, yet these dictate the overall time step for the whole problem. As an example, think of a mesh with a small geometric feature somewhere or a mesh stemming from an adaptive computation.

In these cases one option is to use local time stepping, which allows the use of a larger time step based on the size of the majority of the elements. This is possible due to the element-wise nature of the DG scheme. The larger the spread is between the smallest mesh-element size and the ideal mesh-element size dictated by a points per wavelength argument, the more beneficial this technique is.

The basic problem with local time stepping, aside from stability issues, is to obtain high accuracy. Classical results only involve second order accuracy. This is not good enough for DG methods.

In order to perform local time stepping, the third order classical Adams-Bashforth (AB) method is implemented

$$u_{n+1} = u_n + \frac{k}{12}(23R(u_n) - 16R(u_{n-1}) + 5R(u_{n-2})) \tag{16-14}$$

here, u_n is the solution at time t_n, k is the time step, and $R(u_n)$ the weak form $f - \nabla \cdot \Gamma$ of the DG scheme (compare to the weak formulation of Equation 16-13), which includes the numerical flux.

The basic idea with local time stepping is as follows. First, the elements are divided into groups, based on their size. Typically, the groups are constructed such that the time steps k, $k/2$, $k/4$, and so forth are stable time steps for each group of elements and where any coupling between groups is disregarded. This allows for easy synchronization of the solution at every full step. The right-hand-side vectors

$$R(u_n),\ R(u_{n-1}),\ \text{and}\ R(u_{n-2})$$

are expensive to compute, thus these are naturally stored from previous time steps, so for each group of DOFs, their own history of right-hand sides are stored.

The main idea with local time stepping is to match the different groups with their own time step and thus save computational resources.

- Time Explicit Solver
- Introduction to Solvers and Studies

Reference for the Wave Form PDE Interface

1. Jan S. Hesthaven and Tim Warburton, *Nodal Discontinuous Galerkin Methods — Algorithms, Analysis, and Applications*, Springer, 2008.

About Auxiliary Equation-Based Nodes

The PDE Interfaces provide an environment for specifying a model in terms of equations. In many cases, however, you may only be interested in adding an equation term or a constraint to the PDE implemented by a physics interface.

	The auxiliary equation-based nodes are found under the context submenus **More>**, **Edges>**, and **Points>**. To display these in the context menu, click the **Show More Options** button ( ) on the **Model Builder** toolbar and select **Equation-Based Contributions** in the **Show More Options** dialog box.

These are the available nodes (listed in alphabetical order):

- Auxiliary Dependent Variable
- Discretization (Node)
- Pointwise Constraint
- Weak Constraint
- Weak Contribution (PDEs and Physics)
- Weak Contribution on Mesh Boundaries

	• The PDE Interfaces • Working with Geometric Entities • Domain, Boundary, Pair, Edge, and Point Conditions for PDEs

Weak Contribution (PDEs and Physics)

The **Weak Contribution** node is available in all interfaces and for all geometry levels, including the global level. The node adds an arbitrary contribution to the total system of equations. Its weak form expression may contain the `test()` operator acting on any dependent variable in the model and therefore add contributions to any equation.

To create an independent weak form equation rather than a weak form contribution, add extra states (dependent variables), right-click the **Weak Contribution** node, and add an Auxiliary Dependent Variable. You can then use the auxiliary dependent variables in the weak-form expression.

	To add this node, click the **Show More Options** button ( ) and select **Equation-Based Contributions** in the **Show More Options** dialog box. Then, in the **Model Builder**, right-click the main interface node and, depending on the geometric entity level, select **More>Weak Contribution** at the domain or boundary level, **Edges>Weak Contribution**, **Points>Weak Contribution**, or **Global>Weak Contribution**.

WEAK CONTRIBUTION

Enter the weak-form contribution in the **Weak expression** field. For example, `-ux*test(ux)-uy*test(uy)+1*test(u)` is the weak formulation of Poisson's equation with u as the dependent variable and 1 as the source term on the right-hand side. To add a time derivative as in the time-dependent coefficient form PDE, add `-ut*test(u)` (notice the sign and the syntax `ut` for the time derivative of u).

QUADRATURE SETTINGS

These settings affect the numerical integration, and you do not normally need to change them. The **Use automatic quadrature settings** check box is selected by default, meaning that the settings are taken from the main equation in the interface.

If the check box is cleared, the following settings become available:

Integration Order

The **Integration order** specifies the desired accuracy of integration during discretization. Polynomials of at most the given integration order are integrated without systematic errors. For smooth constraints, a sufficient integration order is typically twice the order of the shape function. For example, the default integration order for second-order Lagrange elements is 4. The integration order is a positive integer.

Integrate on Frame

The **Integrate on frame** setting determines which frame to base the integration on: **Spatial**, **Material**, **Mesh**, or **Geometry**. The default frame is the one used for the physics interface.

Multiplication by 2πr

	This section is available for 2D axisymmetric and 1D axisymmetric models.

By default, the **Multiply by 2πr** check box is selected, which is consistent with the implementation in the physics interfaces. This convention defines all fluxes as per unit area and the natural boundary condition per length and full revolution.

	• Weak Contribution (ODEs and DAEs) • Working with Geometric Entities

Weak Contribution on Mesh Boundaries

The **Weak Contribution on Mesh Boundaries** node is available on the domain level in all physics interfaces. To add this node, click the **Show More Options** button ( ) and select **Equation-Based Contributions** in the **Show More Options** dialog box. Then right-click the main PDE node and select **More>Weak Contribution on Mesh Boundaries** at the domain level.

This node is very similar to the Weak Contribution (PDEs and Physics) node on the boundary level, except that it requires a domain selection. Otherwise, the settings are identical. The domain selection is interpreted as all mesh element boundaries (edges in 2D and faces in 3D) in the interior of the selected domains.

	Element edges or faces that are part of a real boundary are not included in this selection.

Use a Weak Contribution on Mesh Boundaries node to set up boundary conditions between every pair of adjacent mesh elements in its domain selection. To access values in the two adjacent elements, use the `up()` and `down()`

operators. In practice, this node must be used together with discontinuous shape functions to implement a discontinuous Galerkin method. You can also right-click to add an Auxiliary Dependent Variable subnode.

	up and down (operator)

Auxiliary Dependent Variable

If a complete equation is specified in weak form in a Weak Contribution (PDEs and Physics) or Weak Contribution on Mesh Boundaries node and a new dependent variable that is not part of the physics interface is used, right-click either of these nodes to add an **Auxiliary Dependent Variable** subnode.

DOMAIN, BOUNDARY, EDGE, OR POINT SELECTION

	In rare cases, more than one **Auxiliary Dependent Variable** node can be used on subsets of the **Weak Contribution** node's selection (to use different initial values, for example).

AUXILIARY DEPENDENT VARIABLE

Define the name and properties of the auxiliary dependent variable. Enter the:

- **Field variable name** (the dependent variable).
- **Initial value** for the dependent variable. The default is 0.
- **Initial time derivative** for the dependent variable. The default is 0.

	Under **Discretization** (if **Advanced Physics Options** is selected in the **Show More Options** dialog box): • Except for the **Compute boundary fluxes** check box (which is not available), the rest of the settings are the same as for The Coefficient Form PDE Interfaces. • The value type of auxiliary dependent variables is always **Complex** when **Split complex variables in real and imaginary parts** is activated in the Compile Equations node of any solver sequence used.

	• Settings for the Discretization Sections • Using Extra Dimensions • Working with Geometric Entities

About Explicit Constraint Reaction Terms

In the Weak Constraint and Pointwise Constraint nodes you specify an expression, R, which is forced equal to zero. Optionally, you may also specify how reaction terms are applied. The default setting, **All physics (symmetric)**, applies reaction terms based on the constraint expression in a way that preserves the symmetry of a symmetric unconstrained system of equations. These reaction terms are uniquely defined by the symmetry requirement.

Selecting **User defined** from the **Apply reaction terms on** list lets you specify the constraint reaction terms explicitly, using a syntax borrowed from weak form modeling.

- Constraint Reaction Terms
- About Weak Form Modeling

CONSTRAINT REACTION TERM EXAMPLE

For example, in a three-variable problem for variables u_1, u_2, and u_3, specify the constraints (using the **Constraint expression** field in two separate Weak Constraint or Pointwise Constraint nodes)

$$\begin{cases} 0 = R_1(u_1, u_2) = 2u_1 - 3u_2 & \text{on } \partial\Omega \\ 0 = R_2(u_2, u_3) = 2u_2 + 3u_3 & \text{on } \partial\Omega \end{cases}$$

Note that both constraints involve both more than one variable and that to each constraint corresponds a Lagrange multiplier variable, μ_1 and μ_2, respectively. The weak equation corresponding to these constraints is

$$\int_{\partial\Omega} \hat{\mu}_1 R_1 + \hat{\mu}_2 R_2 = \int_{\partial\Omega} \hat{\mu}_1(2u_1 - 3u_2) + \hat{\mu}_2(2u_2 + 3u_3) = 0$$

where μ_1 and μ_2 are the test functions corresponding to the Lagrange multipliers.

This integral equation must be respected for every possible value of the Lagrange multiplier test functions. The only difference between a weak constraint and a pointwise constraint in this respect is that the Lagrange multiplier test functions in a weak constraint are nonzero over the elements adjacent to each mesh node, while the pointwise constraint test functions are nonzero only at the nodes. Therefore, weak constraints are enforced in a local weighted average sense, while pointwise constraints are enforced exactly at the mesh nodes. For this discussion, the difference is not important.

The default reaction terms, applied symmetrically to all dependent variables in the model, are defined simply by switching the test operator (here denoted by the circumflex "^") from the Lagrange multipliers to the constraint expressions. Since the test operator is a linear differential operator, the weak form symmetric reaction term is

$$\int_{\partial\Omega} \mu_1 \hat{R}_1 + \mu_2 \hat{R}_2 = \int_{\partial\Omega} \mu_1\left(\frac{\partial R_1}{\partial u_1}\hat{u}_1 + \frac{\partial R_1}{\partial u_2}\hat{u}_2\right) + \mu_2\left(\frac{\partial R_2}{\partial u_2}\hat{u}_2 + \frac{\partial R_2}{\partial u_3}\hat{u}_3\right) =$$
$$\int_{\partial\Omega} \mu_1(2\hat{u}_1 - 3\hat{u}_2) + \mu_2(2\hat{u}_2 + 3\hat{u}_3)$$

The user-defined **Constraint force expression** to enter in a Weak Constraint or Pointwise Constraint node to explicitly recreate these symmetric reaction terms may be identified as the expressions multiplying the Lagrange multipliers. The test operator is denoted `test()` in weak expression syntax. Therefore, the constraint force expression for constraint $R_1 = 2u_1 - 3u_2 = 0$ is `test(2*u1-3*u2)` or, equivalently, `2*test(u1)-3*test(u2)`. The corresponding expression for R_2 is `test(2*u2+3*u3)` or, after linearization, `2*test(u2)+3*test(u3)`.

As a general rule, anything that multiplies `test(u1)` appears as a source term in the u_1 equation. Similarly, coefficients of `test(u2)` and `test(u3)` are source terms in the u_2 and u_3 equations, respectively. The symmetric reaction terms from the R_1 constraint contain both a `test(u1)` and a `test(u2)` term. Therefore, its generalized reaction force affects both these equations, while the reaction terms from R_2 affect the u_2 and u_3 equations.

Now suppose that u_1 and u_2 in reality represent components of the same vector, $\mathbf{u}$, while u_3 can be seen as an external quantity that should affect, but not be affected by, the value of $\mathbf{u}$. The symmetric reaction term from

constraint R_2 violates this assumption and must be modified. In a user-defined **Constraint force expression**, write, for example, just `test(u2)` to apply reaction terms only as a generalized reaction force in the u_2 equation and leave the u_3 equation unaffected. This corresponds to a weak form integral contribution

$$\int_{\partial\Omega} \mu_1(2\hat{u}_1 - 3\hat{u}_2) + \mu_2\hat{u}_2$$

	Nonsymmetric reaction terms do not always lead to a well-posed problem. If, in the example above, you would also set the **Constraint force expression** for the first constraint to `test(u2)`, the Lagrange multipliers become nonunique because only their sum enters the u_2 equation. At the same time, there is no means to enforce any constraint on u_1 because that equation contains no Lagrange multiplier at all.

Pointwise Constraint

To add a **Pointwise Constraint** node on the domain, boundary, edge, or point level, click the **Show More Options** button ( ) and select **Equation-Based Contributions** in the **Show More Options** dialog box. Then, depending on the geometric entity level, select **More>Pointwise Constraint** at the domain or boundary level, **Edges>Pointwise Constraint**, or **Points>Pointwise Constraint** from the context menu. There is no global pointwise constraint option.

This node adds standard pointwise constraints, similar to the ones used by boundary conditions of a constraint type in the physics interfaces.

	Use **Pointwise Constraint** nodes to add extra constraints to a physics interface and to assume complete control over constraint reaction terms and points of application.

POINTWISE CONSTRAINT

These settings are similar to those for the Weak Constraint, but pointwise constraints do not need explicit, named Lagrange multipliers. Instead, implicit Lagrange multipliers are eliminated by the solvers, together with the degrees of freedom being constrained.

Select an option from the **Apply reaction terms on** list: **All physics (symmetric)** (the default) or **User defined**. For either option, enter a **Constraint expression**, which COMSOL Multiphysics constrains to 0. For example, entering `2-(u+v)` constrains $u+v$ to the value 2.

For **User defined**, enter also a **Constraint force expression**. Note that the constraint force expression must use the `test()` or `var()` operator. For example, write `test(-u)` to enforce the constraint by modifying only the u equation with reaction terms.

From the **Constraint method** list, choose **Elemental** (the default) or **Nodal**:

- Choose **Elemental** to make the software assemble the constraint on each node in each element; that is, there are usually several constraints at the same global coordinates because elements in the computational mesh overlap at nodes.
- Choose **Nodal** to make the software assemble a single constraint for each global node point. The nodal constraint method provides an averaging of the constraints from adjacent elements, which can be beneficial when the constraint has discontinuities between mesh elements (for example, due to discontinuities of the boundary normal). Another case where nodal constraints can be useful is in boundary conditions involving a coupling operator (such as continuity or periodic conditions). With elemental constraints, locking effects can sometimes occur because the coupling operator might map to slightly different points in the source boundary when it is applied to the same node point in different mesh elements.

- About Explicit Constraint Reaction Terms
- Constraint Reaction Terms

See Coefficient Form PDE for all the settings and Compact and Standard Notations for Classical PDEs for the equations that the Classical PDE interface solve.

DISCRETIZATION

Select a **Shape function type** (finite element types): **Lagrange** (the default), **Hermite**, **Discontinuous Lagrange**, **Nodal discontinuous Lagrange**, **Discontinuous scalar density**, **Bubble**, or **Gauss point data**.

Select an associated **Element order** (the order of the shape function for the element). The default is to use **Quadratic Lagrange** elements.

In most cases, use the same shape function type and order for the pointwise constraint as for the dependent variables being constrained. If dependent variables of different order appear in the constraint expression, select the highest order for the pointwise constraint. Notable exceptions are the Hermite and Argyris shape functions, which should be constrained by Lagrange elements of the corresponding order.

The **Frame** list is available when there is more than one unique frame in the model. In this case, select **Geometry**, **Mesh**, **Spatial** (the default), or **Material** from the **Frame** list. This choice only affects how the COMSOL Multiphysics software computes derivatives of Lagrange multipliers and in general does not make any difference at all.

- Working with Geometric Entities
- Settings for the Discretization Sections

Weak Constraint

To add a **Weak Constraint** node on a domain, boundary, edge, or point level, click the **Show More Options** button ( ) and select **Equation-Based Contributions** in the **Show More Options** dialog box. Then, depending on the geometric entity level, select **More>Weak Constraint** at the domain or boundary level, **Edges>Weak Constraint**, or **Points>Weak Constraint** from the context menu. There is no global weak constraint option.

The **Weak Constraint** node adds an extra dependent variable, known as a Lagrange multiplier, and a weak equation, which together enforce the specified constraint.

If the weak constraint is redundant in the sense that some other weak or pointwise constraint also controls the value of the constraint expression, the Lagrange multiplier becomes under-determined. This makes the discrete system of equations singular and therefore virtually impossible to solve, even if the solution for the main dependent variables is unique.

WEAK CONSTRAINT

Select an option from the **Apply reaction terms on** list: **All physics (symmetric)** (the default) or **User defined**. For either option, enter a **Constraint expression**, which COMSOL Multiphysics constrains to 0. For example, entering `2-(u+v)` constrains $u+v$ to the value 2.

For **User defined**, also enter a **Constraint force expression**. The constraint force expression must use the `test()` or `var()` operator. For example, write `test(-u)` to enforce the constraint by modifying only the u equation with reaction terms.

- About Explicit Constraint Reaction Terms
- Constraint Reaction Terms

QUADRATURE SETTINGS

These settings affect the numerical integration, and you do normally not need to change them. The **Use automatic quadrature settings** check box is selected by default, meaning that the settings are taken from the main equation in the interface. If the check box is cleared, the following settings become available:

Integration Order

The **Integration order** is a positive integer that specifies the desired accuracy of integration during discretization. Polynomials of at most the given integration order are integrated without systematic errors. For smooth constraints, a sufficient integration order is typically twice the order of the shape function. For example, the default integration order for second-order Lagrange elements is 4.

When constraints may be discontinuous at points inside the mesh elements, raising the integration order may improve accuracy.

Integrate on Frame

The **Integrate on frame** setting determines which frame to base the integration on: **Spatial**, **Material**, **Mesh**, or **Geometry**. The default frame is the one used for the physics interface.

Multiplication by $2\pi r$

This section is available for 2D axisymmetric and 1D axisymmetric models.

By default, the **Multiply by $2\pi r$** check box is selected to make the Lagrange multiplier represent, for example, the flux per area rather than by length and full revolution. If the check box is cleared, the Lagrange multiplier is not multiplied by $2\pi r$ where it is used in the constraint equation, and therefore represents flux per length and full revolution.

When weak constraints are activated under **Constraint Settings** in other constraint-type boundary conditions, there is no automatic multiplication by $2\pi r$ for axial symmetry.

LAGRANGE MULTIPLIER

Enter a **Lagrange multiplier variable** (the default name is `lm`) and an **Initial value**. Change the name if required, for example, because a variable name conflicts.

DISCRETIZATION

Select a **Shape function type** (finite element types): **Lagrange** (the default), **Hermite**, **Discontinuous Lagrange**, **Nodal discontinuous Lagrange**, **Discontinuous scalar density**, **Bubble**, or **Gauss point data**.

Select an associated **Element order** (the order of the shape function for the element). The default is to use **Quadratic Lagrange** elements.

Always use the same shape function type for the weak constraint as for the variables that are constrained, possibly with lower-order elements for the weak constraint. In some cases (for example, when constraining derivatives) the system of equations can become singular. The reason is usually that there are redundant Lagrange multiplier degrees of freedom in the model. Try to lower the order of the Lagrange multiplier variables or use constraints on the Lagrange multiplier to remove some degrees of freedom.

The **Frame** list is available when there is more than one unique frame in the model. In this case, select **Spatial** or **Material** from the **Frame** list. This affects only how derivatives of Lagrange multipliers are computed. These are normally not used in the constraint equations, but may be of interest for postprocessing.

	The value type of auxiliary dependent variables is always **Complex** when **Split complex variables in real and imaginary parts** is activated in the Compile Equations node of any solver sequence used.

	• Working with Geometric Entities • Settings for the Discretization Sections

Discretization (Node)

To display the option, click the **Show More Options** button ( ) and select **Advanced Physics Options** in the **Show More Options** dialog box; then right-click the main physics interface node and select **Global>Discretization** to add extra **Discretization** nodes ( ).

Use **Discretization** nodes to specify multiple discretizations (shape function type and order) for the same physics, typically using different element orders. In study steps and the **Multigrid Level** subnodes, you can select among the discretizations specified for each physics interface (in the main physics interface node's **Settings** window and in any added **Discretization** nodes); see Discretization Selection and Multigrid Level. This may be used to manually create a multigrid hierarchy, just to compare the effect of different discretizations in different studies.

The **Discretization** node's **Settings** window has one **Discretization** section, and it contains the same list of shape function types and orders for the fields in the physics as the **Discretization** section found in the main physics interface's **Settings** window.

	• Settings for the Discretization Sections • Showing More Options

	If you have the Structural Mechanics Module, see *Stress Analysis of an Elliptic Membrane*: Application Library path **Structural_Mechanics_Module/Verification_Examples/elliptic_membrane**

Modeling with ODEs and DAEs

The ODE and DAE Interfaces

Adding ODEs, DAEs, and Other Global Equations

When working on complex models, single named degrees of freedom, or *states*, may be needed to track and update information that is not logically related to any particular point in space. The evolution of these states is generally governed by equations, which are independent of space, but often time-dependent. In particular, such situations arise when modeling physics in interaction with an external system — for example, a controller or an electrical circuit built from standard components. It is often possible to describe such external systems by a system of ordinary differential equations (ODEs) with a limited number of degrees of freedom. It is also possible to create a model in COMSOL Multiphysics that only solves a set of ODEs or DAEs.

The Global ODEs and DAEs Interface has a Global Equations node that is designed for implementing this type of external equation. Such equations are often tightly coupled to a model in a physical domain. The Global Equations node is also available for any of the physics interfaces.

To access the node, right-click the main interface in the **Model Builder** and select **Global Equations**.

Use the Global Equations node for ODEs, differential algebraic equations, purely algebraic equations and conditions, and transcendental equations, or to add degrees of freedom to a model using the introduced states. Possible uses include:

- Controllers
- Rigid-body mechanics
- Nonlinear eigenvalue problems
- Continuation
- Integral constraints
- Augmented or generalized equations

An example of the use of an extra state defined using an ODE is to add a state variable that indicates when a condition changes, such as temperature reaching a certain value, where it affects the material properties so that they need to change in the model. You can then add an ODE like

$$\frac{dq}{dt} = (T > T_{\text{melt}})$$

where the indicator variable q is zero as an initial value and remains at zero until T exceeds T_{melt}; it then takes on a nonzero positive value. You can then use q to switch from one set of material properties to another set that is valid when it exceeds T_{melt}.

PRESENTING RESULTS FOR GLOBAL EQUATIONS

The state variables are scalar values and they are available globally. To view the results for an ODE, use the Line Graph, Point Graph, and Global plot types, and Global Evaluation for displaying the numerical solution.

- Plot Groups and Plots
- Derived Values, Evaluation Groups, and Tables

Solving ODEs: An Example

As an example of ODEs, the following equations are the *Lotka-Volterra equations* (also known as the *predator-prey equations*)

$$\dot{r} = ar - brf$$
$$\dot{f} = -cf + drf$$

where r is the rabbit population, and f is the population of foxes. This is an example of a system of two coupled ODEs.

Enter these equations as `a*r-b*r*f-rt` for `r` and `-c*f+d*r*f-ft` for `f`, where a, b, c, and d are scalar values defined using the **Parameters** node's **Settings** window. For this first-order ODE, specify initial values for r and f.

About Parameters, Variables, Variable Utilities, and Expressions

Solving Algebraic and Transcendental Equations: An Example

As an example of an algebraic equation, consider the equation $f(u) = 0$ for

$$f(u) = u^3 + u - 2$$

This equation has a single real-valued root at $u = 1$.

1. In the **Model Builder**, click the Global Equations node in a Global ODEs and DAEs interface.
2. In the **Settings** window for **Global Equations**, enter `u` in the **Name** column and `u^3+u-2` in the **f(u,ut,utt,t)** column (both entries on the same row).
3. Solve this using a stationary solver.
4. In the **Settings** window for **State variable u** (**Global Evaluation**), click the **Evaluate** button (=), and the value of the root displays in the **Table** window.

As an example of a transcendental equation, consider the equation $f(u) = 0$ for

$$f(u) = e^{-u} - u$$

A root to this equation is approximately 0.56714. To enter it for the node:

1. In the **Model Builder**, click the Global Equations node.
2. Enter `u` in the **Name** column and `exp(-u)-u` in the **f(u,ut,utt,t)** column (both entries on the same row).
3. Compute the solution.

4 In the Settings window for **State variable u** (**Global Evaluation**), click the **Evaluate** button (=), and the value of the root (rounded to 0.56714) displays in the **Table** window.

	Derived Values, Evaluation Groups, and Tables

Distributed ODEs and DAEs

For ODEs and DAEs in domains, on boundaries and edges, and at points, The Distributed ODEs and DAEs Interfaces are available to solve the following ODE (or DAE):

$$e_a \frac{\partial^2 u}{\partial t^2} + d_a \frac{\partial u}{\partial t} = f$$

Because it is defined on a geometry but is space independent, it solves the ODE or DAE as a distributed ODE or DAE, with a solution that is defined as a field but with no space variation.

The ODE and DAE Interfaces

The Global ODEs and DAEs Interface

The **Global ODEs and DAEs (ge)** interface ($\frac{d}{dt}$), found under the **Mathematics** branch (Δu) when adding a physics interface, is used to add global space-independent equations that can represent additional states in a model. The equations can be ODEs, algebraic equations, and DAEs. The main default node is **Global Equations**, which you use to define the global equations, including the names of the variables (states), the required initial values, and an optional description.

- Solving Algebraic and Transcendental Equations: An Example
- Adding ODEs, DAEs, and Other Global Equations

GLOBAL ODES AND DAES TOOLBAR

The following nodes are available from the **Global ODEs and DAEs** ribbon toolbar (Windows users), **Global ODEs and DAEs** context menu (macOS or Linux users), or by right-clicking to access the context menu (all users).

For step-by-step instructions and general documentation descriptions, this is the **Global ODEs and DAEs** toolbar.

These are available:

- Global Equations
- Global Constraint
- Weak Contribution (ODEs and DAEs)

About ODEs, Initial-Value Problems, and Boundary-Value Problems

ODEs (ordinary differential equations) are often divided into these two types:

- *Initial-value problems* (IVPs), where the solution u and its derivatives (often with respect to time) are specified in one point (in time) so that $u(0)$ and $u'(0)$ are known, so the system is assumed to start at a fixed initial point. The Global Equations node in COMSOL Multiphysics supports such IVPs described with an equation in the following form: $f(u, \dot{u}, \ddot{u}, t) = 0$, including initial values for u and its derivatives.
- B*oundary-value problems* (BVPs), where the solution u has specified values at a pair of points such as $u(0)$ and $u(1)$; that is, the points 0 and 1 are regarded as boundary points of the domain for the problem. In COMSOL Multiphysics, you can specify such a BVP as a stationary 1D PDE, where the 1D interval represents the independent variable and the u is the dependent variable in the interval.

Global Equations

A default **Global Equations** node ( ) is added to The Global ODEs and DAEs Interface. To add additional **Global Equations** nodes, either right-click and select it from the context menu or click **Global Equations** on the toolbar.

	In any other physics interface, click the **Show More Options** button ( ) and select **Equation-Based Contributions** in the **Show More Options** dialog box. Then right-click the physics interface and select **Global>Global Equations** to add a node directly, without needing to add a separate Global ODEs and DAEs interface.

GLOBAL EQUATIONS

The global equations that you can solve have the following form:

$$f(u, \dot{u}, \ddot{u}, t) = 0$$

with the initial conditions $u(t_0) = u_0$ and $u_t(t_0) = u_{t,0}$ (where the subscript t indicates the time derivative). Several equations can be added and the equation can be coupled.

The first time derivative of u is written `ut`, and the second time derivative of u is `utt`. With time derivatives, this equation is an ODE (ordinary differential equation). With no time derivatives, the equation is an algebraic equation or a transcendental equation. If some equations include time derivatives and others do not, the system is a DAE (differential-algebraic equation).

	Initial conditions are necessary for ODEs and DAEs. For the DAEs, it is important to specify a set of initial conditions consistent with the algebraic part of the system. Otherwise, the solvers may be forced to modify the initial values to make them consistent, or they may fail.

In the **Global Equations** table, each row corresponds to a named state; that is, it defines a single degree of freedom and one equation.

	The selected row in the table of global equations may also be edited using the **Name**, **f(u,ut,utt,t)**, **Initial value (u_0)**, **Initial value (u_t0)**, and **Description** fields underneath the table.

In each column enter as follows:

- Enter the **Name** of the state variable. This also defines time-derivative variables. If a state variable is called `u`, its first and second time derivatives are `ut` and `utt`, respectively. These variables become available in all geometries. Therefore the names must be unique.
- Use the **f(u,ut,utt,t)** column to specify the right-hand side of the equation that is to be set equal to zero.

  The software then adds this global equation to the system of equations. When solving the model, the value of the state variable `u` is adapted in such a way that the associated global equation is satisfied. All state variables and their time derivatives can be used as well as any parameters, global variables, and coupling operators with a scalar output and global domain of definition in the **f(u,ut,utt,t)** column. The variables can be functions of the state variables in the global equations. Setting an equation for a state is optional. The default value of `0` means that the software does not add any additional condition to the model.
- If the time derivative of a state variable appears somewhere in the model during a time-dependent solution, the state variable needs an initial condition. Models that contain second time derivatives also require an initial value for the first time derivatives of the state variables. Set these conditions in the third (**Initial value (u_0)**) and fourth (**Initial value (u_t0)**) columns.

- Enter comments about the state or the equation in the last column, **Description**.
- To add another equation, make additional entries in the first empty row.

  Move equation rows up and down using the **Move Up** ( ) and **Move Down** ( ) buttons.

  To remove an equation, select some part of that equation's row in the table and click the **Delete** button ( ).

  Save the definitions of the global equations to a text file by clicking the **Save to file** button ( ) and using the **Save to File** dialog box that appears. To load a text file with global equation definitions, use the **Load from File** button ( ) and the **Load from File** dialog box that appears. Data must be separated by spaces or tabs (or be in a Microsoft Excel Workbook spreadsheet if the license includes LiveLink™ *for* Excel®).

DISCRETIZATION

To display this section, click the **Show More Options** button ( ) and select **Advanced Physics Options** in the **Show More Options** dialog box.

The **Discretization** section for **Global Equations** is used to specify the **Value type** (**Real** or **Complex**) of the variables. The **Split complex variables in real and imaginary parts** setting is activated in the **Compile Equations** node of any solver sequence. The default for the split complex variables setting is to be not active and in that case you do not need to specify the value type for global equations variables (the value type specified would be ignored in such cases). The value type (complex or real) for all the variables defined by this **Global Equations** node is selected in the **Value type when using splitting of complex variables** selection. The default value type is **Complex**.

UNITS

By default, the global equations are dimensionless, but units can be defined for the dependent variable and the source term (that is, the overall left and right side of the equation). The units for these quantities — in combination with the unit for time — fully define the units for all other terms in the equations. Select the units from a list of physical quantities or enter the unit directly.

Select the **Dependent variable quantity** that defines the unit for the dependent variable u. The default is **Dimensionless** (with **1** in the **Unit** column). Click the **Select Dependent Variable Quantity** button ( ) to open the **Physical Quantity** dialog box to browse to find a physical quantity to use. You can also type a search string in the text field at the top of the dialog box and then click the **Filter** button ( ) to filter the list of physical quantities. For example, type `potential` and click the **Filter** button to only list physical quantities that represent some kind of potential. Alternatively, click the **Define Dependent Variable Unit** button ( ) to edit the unit directly in the **Unit** column, typing a unit to define the dependent variable quantity. The quantity column then contains **Custom unit**.

Select the **Source term quantity** that defines the unit for the source term f (the unit for the right — and left — side of the global equation). The default is **Dimensionless** (with **1** in the **Unit** column). Click the **Select Source Term Quantity** button ( ) to open the **Physical Quantity** dialog box to browse to find a physical quantity to use. You can also type a search string in the text field at the top of the dialog box and then click the **Filter** button ( ) to filter the list of physical quantities. For example, type `potential` and click the **Filter** button to only list physical quantities that represent some kind of potential. Alternatively, click the **Define Source Term Unit** button ( ) to edit the unit directly in the **Unit** column, typing a unit (for example, `W/m^3` or `A/m^3`) to define the dependent variable quantity. The quantity column then contains **Custom unit**.

Global Constraint

Use a **Global Constraint** node ( ), for example, to make the sum of some global variables (space-independent) equal to a fixed number. To add a **Global Constraint**, either right-click The Global ODEs and DAEs Interface and select it from the context menu or click **Global Constraint** on the toolbar.

	In any other physics interface, click the **Show More Options** button ( ) and select **Equation-Based Contributions** in the **Show More Options** dialog box. Then right-click the physics interface and select **Global>Global Constraint**.

GLOBAL CONSTRAINT

Choose an option from the **Apply reaction terms on** list: **All physics (symmetric)** (the default) or **User defined** to define reaction terms. For either choice, enter a **Constraint expression**. The default is 0. For example, entering `2-(u+v)` constrains $u+v$ to the value 2. For **User defined**, enter a **Constraint force expression**.

	The **Constraint force expression** must use the `test()` or `var()` operator. For example, write `test(-u)` to enforce the constraint by modifying only the u equation with reaction terms. See Constraint Reaction Terms and Pointwise Constraint for more information.

Weak Contribution (ODEs and DAEs)

Another option is to enter equations in the weak form using the **Weak Contribution** node ( ). This can be convenient in advanced modeling because it controls the test variables multiplying the equations. Wherever a test function of a state variable appears (in the Global Equations node or elsewhere in the model), whatever it multiplies ends up in the same equation in the discrete system. To add a **Weak Contribution**, either right-click The Global ODEs and DAEs Interface and select it from the context menu or click **Weak Contribution** on the toolbar.

	There can be zero or more weak expressions, regardless of the number of states.

WEAK CONTRIBUTION

Enter the expression that contains the weak formulation in the **Weak expression** field.

	See The Wall Distance Interface for an example of how to write an ODE using a weak formulation.

The Distributed ODEs and DAEs Interfaces

The interfaces for distributed ODEs and DAEs ($\frac{d}{dt}$) — **Domain ODEs and DAEs (dode)**, **Boundary ODEs and DAEs (bode)**, **Edge ODEs and DAEs (eode)**, and **Point ODEs and DAEs (pode)** — are found under the **Mathematics>ODE and DAE Interfaces** branch ($\frac{d}{dt}$) when adding a physics interface. These interfaces provide the possibility to solve distributed ODEs and DAE in domains, on boundaries and edges, and at points.

When any of these interfaces are added, these default nodes are also added to the **Model Builder**: **Distributed ODE** and **Initial Values**. Then, from the **Physics** toolbar, add other nodes that implement, for example, other algebraic equations. You can also right-click the node to select features from the context menu.

The following sections provide information about nodes available in the distributed ODEs and DAEs interfaces.

SETTINGS

The **Label** is the default physics interface name.

The **Name** is used primarily as a scope prefix for variables defined by the physics interface. Refer to such physics interface variables in expressions using the pattern `<name>.<variable_name>`. In order to distinguish between variables belonging to different physics interfaces, the `name` string must be unique. Only letters, numbers, and underscores (_) are permitted in the **Name** field. The first character must be a letter.

The default **Name** (for the first ODEs and DAEs interface in the model) is `dode` (in domains), `bode` (on boundaries), `eode` (on edges), or `pode` (at points).

	Under **Discretization**, and except for the **Compute boundary fluxes** check box (which is not available), the rest of the settings are the same as for The Coefficient Form PDE Interfaces. To see more settings than the shape functions and element orders, click the **Show More Options** button ( ) and select **Advanced Physics Options** in the **Show More Options** dialog box.

	• Element Order and Shape Function Type • Distributed ODE • Initial Values (the same as for the PDE interfaces)

Distributed ODE

This is the default equation for a **Distributed ODE** in an interface for distributed ODEs and DAEs. Specify the coefficients for an ODE with the following equation coefficients:

$$e_a \frac{\partial^2 u}{\partial t^2} + d_a \frac{\partial u}{\partial t} = f$$

- e_a is the *mass coefficient*.
- d_a is a *damping coefficient* or a *mass coefficient*.
- f is the *source term*.

	The settings are the same as for the Coefficient Form PDE.

Algebraic Equation

This node adds an **Algebraic Equation** in an interface for distributed ODEs and DAEs. Specify an algebraic equation as

$$f = 0 \tag{16-15}$$

ALGEBRAIC EQUATION

Enter an expression f for the equation $f = 0$ that defines the algebraic equation in the **f** field. If there are multiple dependent variables, there is a vector of algebraic equations for each variable.

The Events Interface

The **Events (ev)** interface ( ), found under the **Mathematics>ODE and DAE Interfaces** branch ( ) when adding a physics interface, is used to create solver events. An event can be explicit or implicit, and the difference is that for explicit events you must specify the exact time when the event occurs. When an event occurs, the solver stops and provides a possibility to reinitialize the values of states and dependent variables.

SETTINGS

The **Label** is the default physics interface name.

The **Name** is used primarily as a scope prefix for variables defined by the physics interface. Refer to such physics interface variables in expressions using the pattern `<name>.<variable_name>`. In order to distinguish between variables belonging to different physics interfaces, the `name` string must be unique. Only letters, numbers, and underscores (_) are permitted in the **Name** field. The first character must be a letter.

The default **Name** (for the first Events interface in the model) is `ev`.

	See *Thermal Controller, Reduced Order Model* for the use of this interface and the Discrete States, Indicator States, and Implicit Event nodes (Application Library path **COMSOL_Multiphysics/Tutorials/thermal_controller_rom**).

EVENTS TOOLBAR

The following nodes are available from the **Events** ribbon toolbar (Windows users), **Events** context menu (macOS or Linux users), or by right-clicking to access the context menu (all users).

	For step-by-step instructions and general documentation descriptions, this is the **Events** toolbar.

The following event features are available:

- Discrete States
- Indicator States
- Explicit Event
- Implicit Event
- Global Equations

Discrete States

Use the **Discrete States** node ( ) to define discrete state variables that do not have to be continuous in time. They are often used as logical help variables that control what expression to use in a weak expression or constraint.

DISCRETE STATES

Enter values or expressions in the table for the **Name** and **Initial value (u0)**, and then enter a **Description** (optional).

Indicator States

Use the **Indicator States** node ( ) to define state variables that the solver uses to trigger implicit events, which occur at a zero crossing of an indicator state variable if the implicit event condition changes from false to true.

	This behavior implies, for example, that an event of the type $z > 0$, where z is an indicator state, can be detected accurately because the zero crossing of z is found. But if the condition (in Event Conditions) is formulated as, for example, $z > 1$, the event is not triggered accurately.

INDICATOR VARIABLES

Multiple indicator state variables can be defined in the table together with corresponding g-coefficients and initial values. A state variable, u, gets its value by solving the following equation:

$$\text{nojac}(g(v, \dot{v}, \ddot{v}, t)) - u = 0$$

with the initial conditions $u(t_0) = u_0$ (where the dot notation indicates time derivatives). You use the state variables in the implicit event condition that you specify for the Implicit Event node. The g-coefficients $g(v, \dot{v}, \ddot{v}, t)$ are written similarly as when defining Global Equations; for example, any global state variables or operators in the model can be used as well as the time or discrete state variables defined by the Events interface. However, the expressions cannot contain any indicator state variables. The `nojac` operator makes sure that the state variables do not enter into the Jacobian matrix, avoiding fill-in of the matrix.

Enter values or expressions in the table for the **Name**, g-coefficients **g(v,vt,vtt,t)**, **Initial value (u0)**, and (optionally) enter a **Description**.

Explicit Event

An **Explicit Event** node ( ) specifies an event that occurs at predefined times entered in the **Event Timings** section. When an event occurs, it is possible to specify reinitialization of global states in the **Reinitialization** section. Right-click an **Explicit Event** node to add the Reinitialization on Domains, Boundaries, Edges, or Points node.

EVENT TIMINGS

Write the first time an explicit event occurs in the **Start of event** text field. It is also possible to repeatedly trigger the event by entering the period in the **Period of event** field.

REINITIALIZATION

In the table, enter information in the **Variable** and **Expression** columns for the global state variables that the event reinitializes to the given expression.

Implicit Event

Use the **Implicit Event** node ( ) to specify an event that occurs when a condition involving an indicator state is fulfilled. When an event occurs, it is possible to specify reinitialization of global state variables. Right-click an **Implicit Event** node to add a Reinitialization on Domains, Boundaries, Edges, or Points node.

EVENT CONDITIONS

Enter the condition in the **Condition** field using only indicator states, comparisons operators (< or >), and logical operators (`!`, `||`, or `&&`). When the condition changes its state from false to true at the zero crossing of one of the indicator states, this triggers the implicit event.

For example, use `z>0` to trigger the event when the indicator state `z` goes from negative to positive, and use `z<0` to trigger when `z` goes from positive to negative. The condition is only evaluated at zero crossings of the indicator states, so, for example, using `z>1` as a condition never triggers the event.

REINITIALIZATION

In the table under **Variables**, enter any global dependent variable name. In the **Expression** column, enter the corresponding reinitialization expression for each variable.

Reinitialization on Domains, Boundaries, Edges, or Points

The **Reinitialization on Domains**, **Reinitialization on Boundaries**, **Reinitialization on Edges**, or **Reinitialization on Points** node can reinitialize dependent variables defined on domains, boundaries, edges, or points, respectively, when an event occurs. Right-click an Explicit Event or Implicit Event node to add this node.

REINITIALIZATION

In the table under **Variables**, enter any dependent variable name. In the **Expression** column, enter the corresponding reinitialization expression for each variable as defined on domains, boundaries, edges, or points that the event reinitializes.

The Wall Distance Interface

The **Wall Distance (wd)** interface ( ), found under the **Mathematics** branch ( ) when adding a physics interface, has the equations and boundary conditions for calculating the distance to walls in fluid-flow simulation using a modified *eikonal equation*, solving for a dependent variable G that is related to the wall distance. The main node is the **Distance Equation** node, which adds the distance equation (modified eikonal equation) and provides an interface for defining the reference length scale.

When this interface is added, these default nodes are also added to the **Model Builder**: **Wall Distance**, **Distance Equation**, and **Initial Values**. A default boundary condition is also added: a homogeneous Neumann condition that does not appear in the Model Builder. Right-click the **Wall Distance** node to add boundary conditions for walls.

SETTINGS

The **Label** is the default physics interface name.

The **Name** is used primarily as a scope prefix for variables defined by the physics interface. Refer to such physics interface variables in expressions using the pattern `<name>.<variable_name>`. In order to distinguish between variables belonging to different physics interfaces, the `name` string must be unique. Only letters, numbers, and underscores (_) are permitted in the **Name** field. The first character must be a letter.

The default **Name** (for the first Wall Distance interface in the model) is `wd`.

PHYSICAL MODEL

Enter a **Smoothing parameter** σ_w in Equation 16-18. The default value is 0.2.

DEPENDENT VARIABLES

The dependent variable is the **Reciprocal wall distance** G. You can change its name, which changes both the field name and the variable name. If the new name coincides with the name of another reciprocal distance field in the model, the interfaces share degrees of freedom. The new name must not coincide with the name of a field of another type, or with a component name belonging to some other field.

DISCRETIZATION

To display other settings than the element order in this section, click the **Show More Options** button ( ) and select **Advanced Physics Options** in the **Show More Options** dialog box.

	• Settings for the Discretization Sections • Working with Geometric Entities • Domain and Boundary Nodes for the Wall Distance Interface and Initial Values

Domain and Boundary Nodes for the Wall Distance Interface

The Wall Distance Interface has these domain settings and boundary conditions available:

- Distance Equation
- Initial Values
- Periodic Condition
- Wall
- Wall Distance Continuity

	The default boundary condition, a homogeneous Neumann condition, applies to all boundaries that are not walls: $\nabla G \cdot \mathbf{n} = 0$ This node does not display in the model tree.

	For axisymmetric models, COMSOL Multiphysics automatically takes the axial symmetry boundaries (at $r = 0$) into account, and prohibits the wall boundary node from being defined here.

	Working with Geometric Entities

Distance Equation

The **Distance Equation** node adds to Equation 16-18, and the **Distance Equation** form contains the following sections for defining the length scale.

DISTANCE EQUATION

Select an option for the **Reference length scale** l_{ref} (SI unit: m): **Automatic** (the default) to use Equation 16-19 to compute l_{ref}, or **Manual** to enter a value in the field. The default value, when the scale is not computed automatically, is 1 m (when using SI units).

Initial Values

The **Initial Values** node adds an initial value for the reciprocal wall distance that can serve as an initial guess for a nonlinear solver.

INITIAL VALUES

Enter a value or expression for the initial value of the **Reciprocal wall distance** G (SI unit: 1/m). The default value is `wd.G0`.

Wall

The **Wall** node implements the following boundary condition for walls:

$$G = G_0 = \frac{2}{l_{\text{ref}}}$$

Wall Distance Continuity

The **Wall Distance Continuity** node implements continuity in the wall distance across a pair boundary so that the wall distance is continuous across the pair boundary instead of treating the pair boundary as a wall.

	Identity and Contact Pairs

Periodic Condition

The **Periodic Condition** node adds a *periodic boundary condition*. This periodicity makes the selected boundaries connected so that they are not walls, and the wall distance values are continuous across the periodic boundaries.

BOUNDARY SELECTION

The software automatically identifies the boundaries as either source boundaries or destination boundaries. This works fine for cases like opposing parallel boundaries. In other cases, right-click **Periodic Condition** and add a Destination Selection subnode to control the destination. By default it contains the selection that COMSOL Multiphysics has identified.

CONSTRAINT SETTINGS

To display this section, click the **Show More Options** button ( ) and select **Advanced Physics Options** in the **Show More Options** dialog box. This section contains settings for specifying the type of constraint and whether to use a pointwise or weak constraint. See Constraint Settings for more information.

ORIENTATION OF SOURCE

To display this section, click the **Show More Options** button ( ) and select **Advanced Physics Options** in the **Show More Options** dialog box. For information about the **Orientation of Source** section, see Orientation of Source and Destination.

- Periodic Boundary Conditions
- Working with Geometric Entities

Theory for Wall Distance

The Eikonal Equation

Turbulence models often use the distance to the closest wall to approximate the mixing length or for regularization purposes. One way to compute the wall distance is to solve the eikonal equation:

$$|\nabla D| = 1 \tag{16-16}$$

with $D = 0$ on solid walls and $\nabla D \cdot \mathbf{n} = 0$ on other boundaries. The eikonal equation can be tricky to solve, and produces the exact distance to the closest wall. The modified equation described below is less computationally expensive to solve. It also uses a reference length to put more emphasis on solid objects larger than the reference length and to reduce the emphasis on smaller objects. The introduction of a reference length produces a more relevant wall distance in the following instances:

- In convex regions of small dimensions, the wall distance is reduced to reflect the close proximity of several walls.
- When a small object, such as a thin wire, is present in free flow, the wall distance is affected only in a very small region around it.

Modified Eikonal Equation

COMSOL Multiphysics uses a modified eikonal equation based on the approach in Ref. 1. This modification changes the dependent variable from D to $G = 1/D$. Equation 16-16 then transforms to

$$\nabla G \cdot \nabla G = G^4 \tag{16-17}$$

Additionally, the modification adds some diffusion and multiplies G^4 by a factor to compensate for the diffusion. The result is the following equation, which the Wall Distance interface uses:

$$\nabla G \cdot \nabla G + \sigma_w G(\nabla \cdot \nabla G) = (1 + 2\sigma_w)G^4 \tag{16-18}$$

where σ_w is a small constant. If σ_w is less than 0.5, the maximum error falls off exponentially when σ_w tends to zero. The default value of 0.2 is a good choice for both linear and quadratic elements.

The boundary conditions for Equation 16-18 is $G = G_0 = C/l_{ref}$ on solid walls and homogeneous Neumann conditions on other boundaries. The effect of C is that the solution becomes less smeared the higher the value of C. The error tends asymptotically to $0.2l_{ref}$ as C tends to infinity, but making it very large destabilizes Equation 16-18. C is 2 in the Wall Distance interface.

The effect of l_{ref} is loosely speaking that the distance to objects larger than l_{ref} is represented accurately, while objects smaller than l_{ref} appear to be further away than their exact geometrical distance. For a channel, l_{ref} should typically be set to the channel width or there about. l_{ref} has a lower bound in that it must be larger than all cells adjacent to any boundary where the boundary condition $G = G_0$ is applied; otherwise, the solution displays oscillations. l_{ref} is the only parameter in the model, and the default value is half the shortest side of the geometry bounding box. If the geometry consists of several very slender entities, or if the geometry contains very fine details, this measure can be too large. Then define l_{ref} manually.

The initial value is by default defined as $G_0 = 2/l_{ref}$, in correspondence with the boundary conditions.

The wall distance $D_w = 1/G - 1/G_0$ is a predefined variable that is used for analysis. You also have access to a vector-valued variable that represents the direction toward the nearest wall, which is defined as

$$\frac{\nabla G}{\sqrt{\max(\nabla G^2, \text{eps})}} \tag{16-19}$$

Reference for the Wall Distance Interface

1. E. Fares and W. Schröder, "A Differential Equation for Approximate Wall Distance", *International Journal for Numerical Methods in Fluids*, vol. 39, pp. 743–762, 2002.

Curvilinear Coordinates

Introduction

A *curvilinear coordinate system* is a type of coordinate system where the coordinate lines can be curved. Using a curvilinear coordinate system can make it easier to, for example, define boundary conditions that follow a curved surface. The curvilinear coordinate systems in COMSOL Multiphysics can define a vector field and an associated base vector system using the following methods:

- A diffusion method, which solves Laplace's equation $\Delta u = 0$ and computes the vector field as $-\nabla u$. Solve for the vector field using a Stationary study.
- An adaptive method, which adapts the computed vector field to maintain a constant streamline density on the cross section. Solve for the vector field using a Stationary study.
- An elasticity method, which computes the vector field from the solution with the eigenvalue closest to zero for the following eigenvalue problem:

  $$-\nabla \cdot (s(\nabla \cdot \mathbf{u})I + (\nabla \mathbf{u} + \nabla \mathbf{u}^T)) = \lambda \mathbf{u}$$

  Solve for the vector field using an Eigenvalue study.
- A flow method, which solves the following equation for $\mathbf{u}$ and p, and uses $\mathbf{u}$ as the vector field:

  $$\nabla \cdot [-pI + (\nabla \mathbf{u} + (\nabla \mathbf{u})^T)] = 0$$
  $$\nabla \cdot \mathbf{u} = 0$$

  Solve for the $\mathbf{u}$ and p using a Stationary study.
- A user-defined vector field. No study step is required.

	Solve for the curvilinear coordinates (unless they are user-defined) in a separate study or separate study step, which you run before the study or study step where you solve for the physics that make use of the computed curvilinear coordinates. Simultaneously solving for the curvilinear coordinates and the physics that use them does not normally work.

The Curvilinear Coordinates Interface

With the **Curvilinear Coordinates (cc)** interface ( ), you can create a vector field $\mathbf{v}$ and a base vector system (with basis vectors $\mathbf{e}_1$, $\mathbf{e}_2$, and $\mathbf{e}_3$) that can be used by other physics to specify, for example, external currents or anisotropic material properties of a bundle of wires or fibers. The resulting coordinate system can be — but does not have to be — curvilinear. Right-click the **Curvilinear Coordinates** node ( ) to add one of the available methods for computing the vector field for the curvilinear coordinates:

- Diffusion Method
- Adaptive Method
- Elasticity Method
- Flow Method
- User Defined

The first node added will be applied to all domains by default. Additional nodes will have an initially empty selection. You can use more than one vector field computation method (of the same or different types), by applying the corresponding nodes on different sets of domains.

The Curvilinear Coordinates interface is available for 2D, 2D axisymmetric, and 3D geometries. The Settings window contains the following sections:

SETTINGS

The **Label** is the default physics interface name.

The **Name** is used primarily as a scope prefix for variables defined by the physics interface. Refer to such physics interface variables in expressions using the pattern `<name>.<variable_name>`. In order to distinguish between variables belonging to different physics interfaces, the `name` string must be unique. Only letters, numbers, and underscores (_) are permitted in the **Name** field. The first character must be a letter.

The default **Name** (for the first Curvilinear Coordinates interface in the model) is `cc`.

EQUATION

See Physics Nodes — Equation Section.

SETTINGS

The **Normalize vector field** check box is selected by default because a normalized vector field simplifies the use of curvilinear coordinates and a base vector system.

Select the **Create base vector system** check box to add a **Curvilinear System** node under **Definitions**, which is a Base Vector System node with a name that indicates that it is created by a **Curvilinear Coordinates** interface and contains the base vectors from the curvilinear coordinate computation. Selecting this check box also adds a Coordinate System Settings subnode for specifying the second basis vector $\mathbf{e}_2$ (the software then forms the third basis vector as the cross product of the first and second basis vectors).

	Working with Geometric Entities

	Anisotropic Heat Transfer Through Woven Carbon Fibers: Application Library path **COMSOL_Multiphysics/Heat_Transfer/carbon_fibers**

Diffusion Method

Add a **Diffusion Method** node to compute the vector field based on Laplace's equation $\Delta u = 0$ with the vector field $\mathbf{v}$ defined as $\mathbf{v} = -\nabla u$ (divided by $|-\nabla u|$ if normalized). This method is a scalar "potential method" resulting in an incompressible vector field and is useful for geometries that are smooth but leads to concentrations at sharp corners. To define the equation in the geometry, you can add the following boundary conditions:

- Wall (the default boundary condition)
- Inlet
- Jump
- Outlet

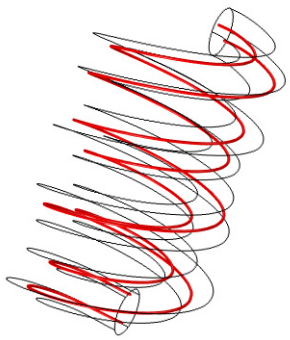

Figure 16-1: The computed velocity field in a helix using a Curvilinear Coordinates interface with a Diffusion Method.

Adaptive Method

The **Adaptive Method** node computes a vector field adapted to the shape of the geometry so that the streamline density is constant on cross sections of the geometry. When the **Normalize vector field** check box is not selected in the Curvilinear Coordinates node, the method also ensures conservation of the vector field, meaning that the magnitude of the field will vary as a function of the cross-section area of the domain.

This method is similar to the Coil Geometry Analysis approach used in the Multi-Turn Coil feature in Magnetic Fields (in the AC/DC Module).

To define the equation in the geometry, you can add the following boundary conditions:

- Inlet
- Interior Wall
- Jump
- Outlet

If the vector field must enter and exit the domain selection, add an Inlet and one or more Outlet subnodes and select respectively the inlet and outlet boundaries for the vector field. If the vector field is entirely contained in the domain selection, add a Jump subnode and select an interior boundary where the vector field must be orthogonal. Only one active Inlet or Jump subnode is allowed. Use the Interior Wall subnode to further shape the path of the vector field.

Elasticity Method

Add an **Elasticity Method** node to compute the vector field based on the solution with the eigenvalue closest to zero for the following eigenvalue problem:

$$-\nabla \cdot (s(\nabla \cdot \mathbf{u})I + (\nabla \mathbf{u} + \nabla \mathbf{u}^T)) = \lambda \mathbf{u}$$

The vector field $\mathbf{v}$ is the same as $\mathbf{u}$ but normalized if normalization is selected.

	The Elasticity method requires that you use an eigenvalue study.

To define the equation in the geometry, you can add the following boundary conditions:

- Wall (the default boundary condition)
- Outlet

In addition, a default **Inlet** node is added because one inlet must be added for the geometry to define the positive direction of the vector field for the curvilinear coordinate as indicated by the arrow on the inlet boundary in the **Graphics** window.

Flow Method

Add a **Flow Method** node to solve the following equation for the vector $\mathbf{u}$ and the scalar p and use $\mathbf{u}$ as the vector field:

$$\nabla \cdot [-pI + (\nabla \mathbf{u} + (\nabla \mathbf{u})^T)] = 0$$
$$\nabla \cdot \mathbf{u} = 0$$

The vector field $\mathbf{v}$ is the same as $\mathbf{u}$ but normalized if normalization is selected. This approach is equivalent to computing the flow of an incompressible fluid — that is, creeping flow or Stokes flow. The Flow method is useful for geometries with nonconstant cross sections. To define the equation in the geometry, you can add the following boundary conditions:

- Wall (the default boundary condition)
- Inlet
- Jump
- Outlet

User Defined

Add a **User Defined** node to specify the vector field $\mathbf{u}$ as user-defined expressions for its components. In the **User Defined** section, enter the expressions for those components in the text fields under **Vector field**. The vector field $\mathbf{v}$ is the same as $\mathbf{u}$ but normalized if normalization is selected. You can select any other coordinate system in the model from the **Coordinate system** list to use as the coordinate system for defining the vector field. The **Global coordinate system** is the default.

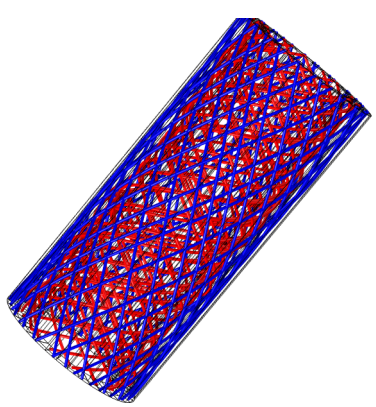

Figure 16-2: A model of arterial wall mechanics, using four user-defined Curvilinear Coordinates interfaces and a cylindrical coordinate system to define the wall pattern.

Inlet

Use an **Inlet** node to define where the vector field starts. Select the boundaries to define as the vector field's inlet in the **Boundary Selection** section.

- For the **Diffusion Method**, the **Inlet** node sets a condition on a value or a flux depending on what you choose from the **Condition on** list in the **Inlet** section:
  - Choose **Value** (the default) to specify that $U = U_0$, where $U_0 = 1$ is the default value.
  - Choose **Flux** to specify that $-\mathbf{n} \cdot \nabla U = F$, where the flux F is 1 by default. For example, if you add a Flux boundary condition, stating that the normal flux is 1, you can combine that boundary condition with an Outlet boundary condition $U = 0$. Then the potential represents the path length from the Outlet boundary.
- For the **Adaptive Method**, the **Inlet** node identifies a set of exterior boundaries where the vector field enters orthogonally the domain selection. A red arrow in the Graphics window shows the direction of the vector field on the boundary. Select the **Reverse direction** check box to reverse the direction of the vector field.
- For the **Elasticity Method**, an **Inlet** node with no selection is added by default. It sets $\mathbf{e} \times \mathbf{n} = 0$ at the inlet.
- For the **Flow Method** you can choose, in the **Inlet** section, to define the type of inlet using the **Type** list:
  - Choose **Normal velocity** to specify the normal velocity $\mathbf{u} \cdot \mathbf{n}$ as a velocity u_n (default value: 1, SI unit: m/s) in the **Velocity** field.
  - Choose **Velocity field** to specify the components of the velocity field $\mathbf{u}_\mathrm{in}$ in the text fields under **Velocity** (default: 0, SI unit: m/s). In the **Coordinate System Selection** section, you can select any coordinate system for the Component from the **Coordinate system** list to use as the coordinate system for defining the velocity field. The **Global coordinate system** is the default.

Jump

Use a **Jump** node at a boundary to define a closed-loop vector field. You can add **Jump** nodes to interior boundaries. It is equivalent to a jump from 0 to 1 for the **Diffusion Method** and to a flow inlet and a flow outlet (with constant pressure) for the **Flow Method**; see Inlet above for the available settings. This condition is available also for the **Adaptive Method**. For the **Elasticity Method**, the jump condition is not applicable; instead, you can add an **Inlet** node to an interior boundary if needed.

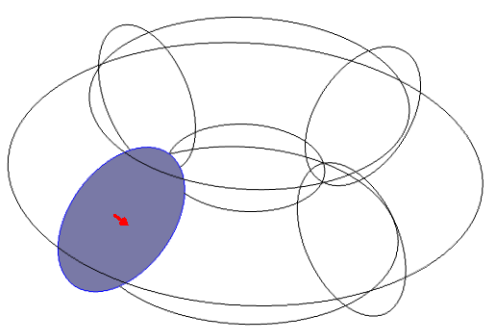

Figure 16-3: A Jump boundary condition applied to one of the interior boundaries of a torus, using a Diffusion method. The arrow indicates the direction of the vector field (the side where the value is 1).

Outlet

Use an **Outlet** node to define where the vector field ends. For the **Diffusion Method**, this means that $U = 0$; for the **Elasticity Method**, it sets $\mathbf{e} \times \mathbf{n}$ to 0. For the **Flow Method**, it is a zero pressure and no stress condition: $p = 0$ and $(\nabla u + (\nabla u)^T) \cdot \mathbf{n} = 0$. Select the boundaries to define as the vector field's outlet in the **Boundary Selection** section.

Wall

The **Wall** node is the default boundary condition and defines the walls as boundaries where the normal component of the vector field is zero. It applies to all boundaries where you do not assign any of the other boundary conditions.

Interior Wall

The **Interior Wall** subnode can be added to the Adaptive Method node to further shape the direction of the vector field. The subnode can be applied to interior boundaries and will force the vector field to be tangential to the boundary. When applying the Interior Wall subnode, take care to not split the domain selection in multiple nonconnected parts.

Coordinate System Settings

A **Coordinate System Settings** node is added by default if you have selected the **Create base vector system** check box in the **Curvilinear Coordinates** node's Settings window. You use this node to specify the second basis vector for the created base vector coordinate system. The Curvilinear Coordinates interface solves for first basis vector and then computes the third basis vector for a full orthonormal coordinate system as the cross product of the first and second basis vector:

$$\mathbf{e}_1 = \frac{\mathbf{v}}{|\mathbf{v}|}$$
$$\mathbf{e}_2 = \frac{\mathbf{v}_2 - (\mathbf{v}_2 \cdot \mathbf{e}_1)\mathbf{e}_1}{|\mathbf{v}_2 - (\mathbf{v}_2 \cdot \mathbf{e}_1)\mathbf{e}_1|}$$
$$\mathbf{e}_3 = \mathbf{e}_1 \times \mathbf{e}_2$$

The **Coordinate System Settings** node's Settings window includes the following section:

SETTINGS

Here you define the direction of the second basis vector $\mathbf{v}_2$ by selecting one of the directions from the **Second basis vector** list: **x-axis**, **y-axis**, **z-axis** (in 3D), or **User defined**. For **User defined**, enter the components of $\mathbf{v}_2$ in the corresponding text fields under **Second basis vector**. You can select any other coordinate system for the Component from the **Coordinate system** list to use as the coordinate system for defining the second basis vector. The **Global coordinate system** is the default.

Using Extra Dimensions

Extra dimensions can be used to extend a standard geometry with additional spatial dimensions. Using extra dimensions it is possible, in principle, to solve PDEs in any number of independent variables, beyond 3D and time.

- Adding Extra Dimensions to a Model
- Definitions

1. To add an extra dimension, right-click the **Global** node. See Adding Extra Dimensions to a Model. The settings for the **Extra Dimension** node are the same as for the **Component** node, except it has a unique **Name**.
2. From the Definitions node, attach the extra dimensions to a selection in the base geometry. See Attached Dimensions.
3. As required, add and define Points to Attach and Integration Over Extra Dimension nodes.
4. Adjust the settings for these topics: Defining Equations and Variables on Extra Dimensions, Selections in the Geometry, and Plotting Results in Extra Dimensions.

DEFINING EQUATIONS AND VARIABLES ON EXTRA DIMENSIONS

To define equations in the product geometry formed by an Attached Dimensions feature, add a Weak Contribution (PDEs and Physics) feature to any physics. In the **Selection** section, select an extra dimension attachment feature in the **Extra dimensions to attach** table, and make a selection of geometric entities in the base geometry and in each attached extra dimension.

By default, there are no dependent variables defined in the extra dimensions. To define dependent variables, add an Auxiliary Dependent Variable subfeature, and then select the geometric entities in the base and extra dimension geometries where it should be defined.

Constraints in the extra dimensions can be defined by using Pointwise Constraint or Weak Constraint features with a selection in the product geometry.

SELECTIONS IN THE GEOMETRY

Whenever an extra dimension geometry has been attached using an Attached Dimensions feature, an **Extra dimensions to attach** list displays in the selection section for features that support selection in the product geometry. By default the extra dimension attachment is set to **None**.

If the **Extra dimensions to attach** setting is changed to one of the **Attached Dimension** features, additional inputs appear for each attached extra dimension geometry. Use these to choose the geometric entity level and the geometric entities to select in each extra dimension.

Features that currently support selection in the product geometry are **Variables**, Weak Contribution (PDEs and Physics), Auxiliary Dependent Variable, Pointwise Constraint, and Weak Constraint.

PLOTTING RESULTS IN EXTRA DIMENSIONS

A solution obtained by means of extra dimensions can be plotted in several ways:

- A “horizontal” section through the product geometry can be plotted by using one of the `atxd` operators. For example, if a 2D extra dimension has the tag `xdim`, the operator `xdim1.atxd2(x0,y0,expr)` evaluates `expr` at a point in the product geometry, defined by the coordinates (x0,y0) in the extra dimension geometry.
- Integrals over sections through the product geometry can be computed by using operators defined by Integration Over Extra Dimension features. For example, if an integration operator called `xdintop1` has been

defined, `xdim1.xdintop1(expr)` integrates `expr` over sections through the product geometry corresponding to the operator's selection of geometric entities in the extra dimension geometry.

- It is also possible to make plots to plot along "vertical" sections through the product geometry. With Datasets, select the extra dimension as Component. Then, for example, if the base geometry is in 3D and the extra dimension's name is `xdim1`, evaluate `comp1.atxd3(x0,y0,z0,expr)`, where (x_0, y_0, z_0) define the coordinates of a point in the base geometry.

EVALUATION OF VARIABLES IN EXTRA DIMENSIONS

When working with extra dimensions, variables can be defined on the base geometry, on an extra dimension, or on a product geometry formed from the base geometry and one or several extra dimensions.

When evaluating a variable v in a product geometry, the rules for resolving the correct definition of v are as follows:

- If the variable is defined in the product geometry, this definition is used.
- Otherwise, if the variable has a definition in the base geometry, the variable is evaluated in the base geometry.
- Finally, if the variable is not defined in the product geometry or base geometry, but is defined in one of the extra dimensions, then it is evaluated in this extra dimension.

NAMING OF PARTIAL DERIVATIVE IN EXTRA DIMENSIONS

Partial derivatives of dependent variables defined on a product of geometric entities of full dimension are formed by appending a coordinate name from the base geometry or one of the extra dimensions. For example, if `u` is a dependent variable, the coordinates in a 2D base geometry are called `x` and `y`; the coordinates in a 2D extra dimension are called `x1` and `y1`; and the partial derivatives with respect to those coordinates are called `ux`, `uy`, `ux1`, and `uy1`, respectively. However, if the dependent variable is defined on an entity of lower dimension in either the base geometry or the extra dimension, insert the character `T` between the dependent variable name and the coordinate name. For example, if `u` is defined on the product of a domain in the base geometry and a boundary in the extra dimension (or vice versa), the partial derivatives are called `uTx`, `uTy`, `uTx1`, and `uTy1`.

Second derivatives follow the same pattern; for example, you can use `uxx1`, if `u` is defined on a product of entities of full dimension, or `uTxx1`, if `u` is defined on a product of entities of lower dimension.

You can also use the `d` and `dtang` operators to evaluate the partial derivatives of dependent variables defined in a product geometry.

- Example: Solving Poisson's Equation in a Cylinder by Means of Extra Dimensions
- Results Analysis and Plots
- Working with Geometric Entities
- Creating Named Selections

Attached Dimensions

An **Attached Dimensions** ( ) node forms the Cartesian product of its selection in the base geometry and the entire geometries of all selected extra dimensions. It is possible to add several Attached Dimensions features forming Cartesian products with different sets of extra dimensions. Each such Cartesian product is called a *product geometry*.

Before Extra Dimensions can be used in physics, it must be attached on a selection in the base geometry. Under the base **Component** node, right-click **Definitions** and from the **Extra Dimensions** submenu, select **Attached Dimensions**.

	Example: Solving Poisson's Equation in a Cylinder by Means of Extra Dimensions

GEOMETRIC ENTITY SELECTION

From the **Geometric entity level** list, choose **Entire geometry** (the default), **Domain**, **Boundary**, **Edge** (3D), or **Point** to determine where extra dimensions should be attached.

Click the **Active** button to toggle between turning ON and OFF selections.

ATTACHED DIMENSIONS

In the **Extra dimensions to attach** list, add the Extra Dimension features to attach. A product geometry is formed as the Cartesian product of the selection of geometric entities in the base geometry and the entire geometry in all selected extra dimensions. Use the **Move Up** ( ), **Move Down** ( ), **Delete** ( ), and **Add** ( ) buttons to make the list contain the Extra Dimension features that you want to attach. See Figure 16-4.

	When the **Attached Dimensions** ( ) node is used in the **Extra dimensions to attach** by some selection in the model, it is not possible to make changes in the list of attached dimensions. To make a change in the list of attached dimensions, change the **Extra dimensions to attach** list in all selections using the **Attached Dimensions** feature to some other **Attached Dimensions** feature or to **None**.

	Deleting an **Attached Dimensions** node from the model resets **Extra dimensions to attach** to **None** for all selections using this **Attached Dimension** node.

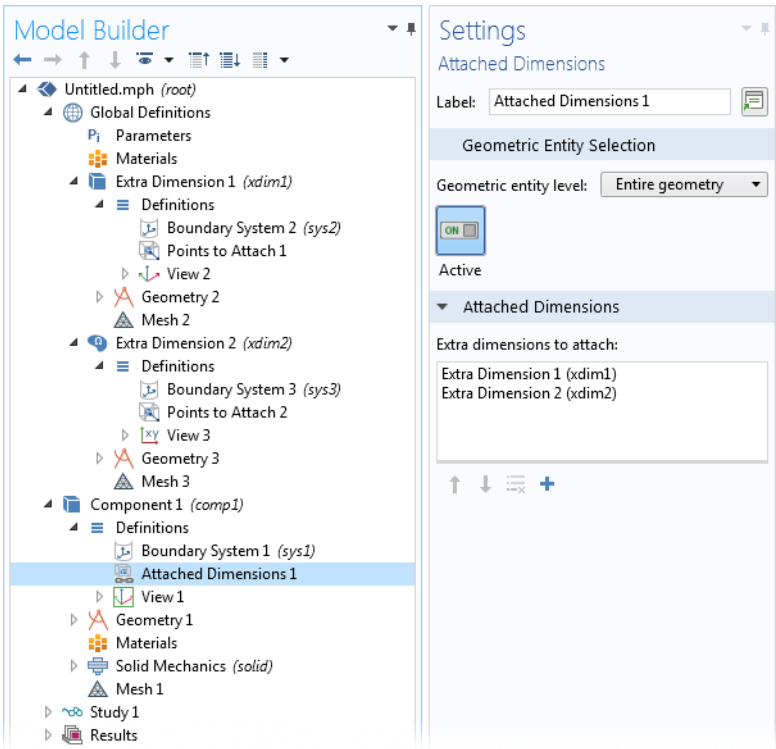

Figure 16-4: The Attached Dimension feature lists all the Extra Dimensions added to a Component. In this example, there are 3D and 2D Extra Dimensions at the Global level. Note that there is also a Definitions node under Extra Dimensions that contains a default Points to Attach feature.

Points to Attach

In each extra dimension, there is a **Points to Attach** ( ) node added by default to the **Definitions** node under Extra Dimension (See Figure 16-4). This can be used to select one or several points in the extra dimension geometry that are identified with the base geometry. In other words, the base geometry is identified with one or several sections through the product geometry.

	In many cases, it is not necessary to select any points to attach.

POINTS TO ATTACH

Select a set of points in the extra dimension. These points define sections through the product geometry that are identified with the base geometry.

	Example: Solving Poisson's Equation in a Cylinder by Means of Extra Dimensions

Integration Over Extra Dimension

To add an **Integration Over Extra Dimension** (∫dw) node and create an operator for integration over an extra dimension, under the Extra Dimension node, right-click **Definitions** and from the **Extra Dimensions** submenu, choose **Integration Over Extra Dimension**.

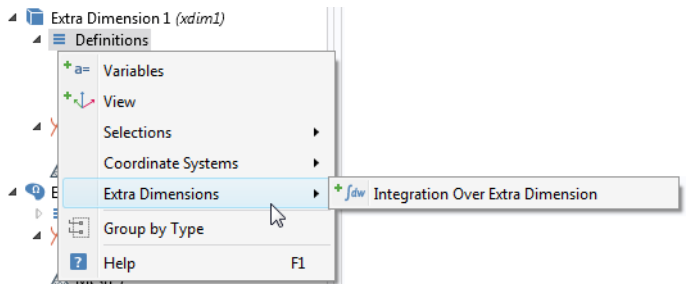

OPERATOR NAME

Enter the **Operator name** of the integration operator.

SOURCE SELECTION

Select the geometric entities in the extra dimension geometry to integrate over.

ADVANCED

Select the **Integration order** and the **Frame** to integrate in. If the Extra Dimension is an axisymmetric geometry, the **Compute integral in revolved geometry** check box is selected by default.

	Example: Solving Poisson's Equation in a Cylinder by Means of Extra Dimensions

Example: Solving Poisson's Equation in a Cylinder by Means of Extra Dimensions

It is straightforward to solve Poisson's equation in a cylinder by setting up a 3D model in COMSOL Multiphysics. This example illustrates the use of extra dimensions by explaining how to solve the same problem by using a 2D base geometry with a 1D extra dimension.

	• Creating a New Model • Introduction to Solvers and Studies • Creating a Geometry for Analysis

1 In the Model Wizard, create a 2D model and add a Weak Form PDE, and a **Stationary** study.

2 In the geometry, draw a **Circle** using the default settings.

3 Add an extra dimension. Right-click the **Global Definitions** node and, from the **Extra Dimensions** menu, select **1D** (requires that **Extra Dimensions** is selected in the **Show More Options** dialog box).

4 In the extra dimension geometry, **Geometry 2** under **Extra Dimension 1**, draw an **Interval** using the default settings.

5 Attach the extra dimension. Under **Component 1**, right-click **Definitions** and from the **Extra Dimensions** submenu, select **Attached Dimensions** ( ).

6 In the **Settings** window for **Attached Dimensions 1**, click the **Add** button (+) and add **Extra Dimension 1 (xdim1)** to the **Extra dimensions to attach** list.

	Attaching this extra dimension forms a cylinder as a Cartesian product of the circle in the base geometry and the interval in the extra dimension geometry.

7 Add an equation on the geometry formed by the Cartesian product. From the **Physics** toolbar, **Domains** menu, click **Weak Contribution**.

8 In the **Settings** window for **Weak Contribution** under **Domain Selection**, select **All domains**.

9 In the **Extra dimensions attachment** list under **Domain Selection**, select **Attached Dimensions 1**. In the **Extra Dimension 1 (xdim1)** selection, select **All domains**. This selects the entire product geometry for the weak contribution.

10 In the **Weak expression** field, enter the expression

```
-test(vx)*vx-test(vy)*vy-test(vx1)*vx1+1[m^-2]*test(v)
```

which is a weak-form expression for Poisson's equation.

11 To add a dependent variable on the product geometry, right-click **Weak Contribution 1** and select **Auxiliary Dependent Variable**.

12 In the **Domain selection** for **Auxiliary Dependent Variable 1**, select **Attached Dimensions 1** in the **Extra dimension attachment** list. In the **Extra Dimension 1 (xdim1)** selection, select **All domains**. This selects the entire product geometry for the auxiliary dependent variable. In the **Field variable name** field, enter the variable name `v`.

13 To add boundary conditions, right-click **Weak Form PDE** and select **More>Pointwise Constraint** (in the boundary section). In **Boundary selection** for **Pointwise Constraint 1**, select **All boundaries**, and in the **Extra dimension attachment** list, select **Attached Dimensions 1**. In the **Extra Dimension 1 (xdim1)** selection, select **All domains**. In the **Constraint expression** field, enter the expression `-v`. This applies a constraint $v = 0$ to `v` on the curved surfaces of the cylinder.

14 To add constraints also on the top and bottom of the cylinder, right click **Weak Form PDE** and select **More> Pointwise Constraint** (in the domain section). In **Domain Selection** for **Pointwise Constraint 2**, select **All domains**, and in the **Extra dimension attachment** list, select **Attached Dimensions 1**. In the **Extra Dimension 1 (xdim1)** selection, set **Geometric entity level** to **Boundary** and **Selection** to **All boundaries**. In the **Constraint expression** field, enter the expression `-v` to constrain v to 0.

15 Before the model can be solved, it is necessary to add suitable boundary conditions for the default dependent variable `u` (defined only in the base geometry). Right-click **Weak Form PDE**, select **Dirichlet Boundary Condition**, and in **Dirichlet Boundary Condition 1**, select **All boundaries**. By default this boundary condition sets u to 0.

16 Right-click **Study 1** and select **Compute**.

By default a plot of the dependent variable `u`, defined on the base geometry, is shown.

1 To plot `v`, go to **2D Plot Group 1>Surface 1** and enter the expression `xdim1.atxd1(0.4,v)`. This makes a plot of `v` on a slice through the cylinder at height 0.4. The `atxd`*i* operator evaluates an expression at a location in the extra dimension.

2 To make a plot of `v` along a vertical line, right-click the **Study1/Solution 1** dataset and select **Duplicate**.

3 In the new dataset **Study1/Solution 1 (1)**, select **Extra Dimension 1 (xdim1)** from the **Component** list.

4 Right-click **Results** and select **1D Plot Group**. In **1D Plot Group 2**, select **Study1/Solution 1 (1)** from the **Dataset** list.

5 Right-click **1D Plot Group 2** and select **Line Graph**. In **Line Graph 1**, set the selection to **All domains**, and under **y-Axis Data**, enter the expression `comp1.atxd2(0.2,0.5,v)`, and click **Plot**. This plots `v` along a vertical line above the point with coordinates (0.2, 0.5) in the base geometry.

17

Sensitivity Analysis

This chapter describes how to perform sensitivity analysis using the Sensitivity interface, which is found under the **Mathematics>Optimization and Sensitivity** ( ) branch when adding an interface.

Theory for the Sensitivity Interface

About Sensitivity Analysis

The Sensitivity interface is special in the sense that it does not contain any physics of its own. Instead, it is a tool for evaluating the sensitivity of a model with respect to almost any variable. The Sensitivity interface is used together with a Sensitivity study step, which in turn controls the Sensitivity solver extension. Simple cases can be handled directly in the Sensitivity study step, while more advanced cases must be set up in a Sensitivity interface prior to solving.

Simulation is a powerful tool for predicting the behavior of physical systems, particularly those that are governed by partial differential equations. However, a single simulation is often not enough to provide sufficient understanding of a system. Hence, a more exploratory process might be needed, such as *sensitivity analysis*, where one is interested in the sensitivity of a specific quantity with respect to variations in certain parameters included in the model. Such an analysis can, for example, be used for estimating modeling errors caused by uncertainties in material properties or for predicting the effect of a geometrical change.

Many times it is possible to reformulate problems of the above type as the problem of calculating derivatives, so differentiation plays a central role in solving such problems. The Sensitivity study step and corresponding physics interface can calculate derivatives of a scalar *objective function* with respect to a specified set of *control variables*. The objective function is in general a function of the solution to a multiphysics problem, which is in turn parameterized by the control variables.

Sensitivity Problem Formulation

Because the Sensitivity interface does not contain any physics, it is not intended for use on its own. When the physics interface is added to a multiphysics model, no new equations are introduced, and the set of solution variables remains the same. Instead, an objective function and a set of control variables can be specified. The Sensitivity interface can perform these distinct tasks:

- Select control variables and set their values
- Define scalar objective functions

	The control variables are independent variables whose values are not affected by the solution process, but they are also degrees of freedom (DOFs) stored in the solution vector. When defining a control variable, its *initial value* must be supplied. The initial value is used to initialize the control variable DOFs, which remain fixed during the solution step.

The companion Sensitivity study step is responsible for:

- Choosing which objective functions and control variables to solve for
- Selecting a sensitivity evaluation method
- Selecting which study step to compute sensitivities for
- Setting up the Sensitivity solver extension

Theory for Stationary Sensitivity Analysis

Evaluating the sensitivity of a scalar-valued objective function $Q(\xi)$ with respect to the control variables, ξ, at a specific point, ξ_0, can be rephrased as the problem of calculating the derivative $\partial Q/\partial\xi$ at $\xi = \xi_0$. In the context of a multiphysics model, Q is usually not an explicit expression in the control variables ξ alone. Rather, $Q(u(\xi), \xi)$ is also a function of the solution variables u, which are in turn implicitly functions of ξ.

The multiphysics problem is a PDE, which after discretization is represented as a system of equations $L(u(\xi), \xi) = 0$. If the PDE has a unique solution $u = L^{-1}(\xi)$, the sensitivity problem can be informally rewritten using the chain rule as that of finding

$$\frac{d}{d\xi}Q(u(\xi), \xi) = \frac{\partial Q}{\partial \xi} + \frac{\partial Q}{\partial u} \cdot \frac{\partial u}{\partial L} \cdot \frac{\partial L}{\partial \xi}$$

The first term, which is an explicit partial derivative of the objective function with respect to the control variables, is easy to compute using symbolic differentiation. The second term is more difficult. Assuming that the PDE solution has N degrees of freedom and that there are n control variables ξ_i, $\partial Q/\partial u$ is an N-by-1 matrix, $\partial u/\partial L$ is an N-by-N matrix (because L^{-1} is unique), and $\partial L/\partial \xi$ is an N-by-n matrix.

	The system of equations, L, is here assumed to include any constraints present in the multiphysics model. The number of degrees of freedom, N, therefore in theory includes also Lagrange multipliers for the constraints. In practice, constraints are usually eliminated, which imposes some restrictions on the sensitivity analysis; see The Sensitivity Analysis Algorithm .

The first and last factors, $\partial Q/\partial u$ and $\partial L/\partial \xi$, can be computed directly using symbolic differentiation. The key to evaluating the complete expression lies in noting that the middle factor can be computed as $\partial u/\partial L = (\partial L/\partial u)^{-1}$ and that $\partial L/\partial u$ is the PDE Jacobian at the solution point:

$$\frac{d}{d\xi}Q(u(\xi), \xi) = \frac{\partial Q}{\partial \xi} + \frac{\partial Q}{\partial u} \cdot \left(\frac{\partial L}{\partial u}\right)^{-1} \cdot \frac{\partial L}{\partial \xi} \tag{17-1}$$

Actually evaluating the inverse of the N-by-N Jacobian matrix is too expensive. In order to avoid that step, an auxiliary linear problem can be introduced. This can be done in two different ways, each requiring at least one additional linear solution step (see Forward Sensitivity Methods and Adjoint Sensitivity Method below).

If an incomplete Jacobian has been detected during the sensitivity analysis, an attempt to assemble the complete Jacobian is done. If the assemble succeeds, the complete Jacobian is used in sensitivity computations in the following way:

Assume that the Jacobian $\frac{\partial L}{\partial u}$ in Equation 17-1 above is incomplete and denote it by $\left(\frac{\partial L}{\partial u}\right)_{\text{incomplete}}$.
Let the complete Jacobian be $\frac{\partial L}{\partial u}$. Hence, the system to solve is

$$\frac{\partial L}{\partial u} \cdot \frac{\partial u}{\partial \xi_i} = \frac{\partial L}{\partial \xi_i} \tag{17-2}$$

Using

$$\frac{\partial L}{\partial u} = \left(\frac{\partial L}{\partial u}\right)_{\text{incomplete}} + \left(\frac{\partial L}{\partial u} - \left(\frac{\partial L}{\partial u}\right)_{\text{incomplete}}\right)$$

the previous system becomes

$$\left(\frac{\partial L}{\partial u}\right)_{\text{incomplete}} \cdot \frac{\partial u}{\partial \xi_i} = \frac{\partial L}{\partial \xi_i} + \left(\left(\frac{\partial L}{\partial u}\right)_{\text{incomplete}} - \frac{\partial L}{\partial u}\right) \cdot \frac{\partial u}{\partial \xi_i}$$

Then, the solution to the system in Equation 17-2 is approximated iteratively by

$$\left(\frac{\partial L}{\partial u}\right)_{\text{incomplete}} \cdot \left(\frac{\partial u}{\partial \xi_i}\right)^n = \frac{\partial L}{\partial \xi_i} + \left(\left(\frac{\partial L}{\partial u}\right)_{\text{incomplete}} - \frac{\partial L}{\partial u}\right) \cdot \left(\frac{\partial u}{\partial \xi_i}\right)^{n-1}$$

where n is the iteration number.

The iterations are terminated either when the estimated error is less than the relative tolerance used by the current solver (convergence), or when the number of iterations has reached the maximum number of iterations specified in the Fully Coupled or Segregated attribute node (nonconvergence).

If the previous algorithm does not converge (that is, the estimated error is larger than the given tolerance), the sensitivity computations are repeated using the incomplete Jacobian and the warning *Jacobian is incomplete. No convergence when attempting to use the complete Jacobian* is written.

If the assemble of the complete Jacobian fails, the incomplete Jacobian is used and the warning *Unable to assemble the complete Jacobian. Using incomplete Jacobian for sensitivity analysis* is written.

FORWARD SENSITIVITY METHODS

To use the *forward sensitivity* methods, introduce the N-by-n matrix of solution sensitivities

$$\frac{\partial u}{\partial \xi} = \left(\frac{\partial L}{\partial u}\right)^{-1} \cdot \frac{\partial L}{\partial \xi}$$

These can be evaluated by solving n linear systems of equations

$$\frac{\partial L}{\partial u} \cdot \frac{\partial u}{\partial \xi_i} = \frac{\partial L}{\partial \xi_i}$$

using the same Jacobian $\partial L/\partial u$, evaluated at $u(\xi_0)$. Inserting the result into Equation 17-1, the desired sensitivities can be easily computed as

$$\frac{d}{d\xi} Q(u(\xi), \xi) = \frac{\partial Q}{\partial \xi} + \frac{\partial Q}{\partial u} \cdot \frac{\partial u}{\partial \xi}$$

ADJOINT SENSITIVITY METHOD

To use the *adjoint sensitivity* method, introduce instead the N-by-1 adjoint solution u^*, which is defined as

$$u^* = \frac{\partial Q}{\partial u} \cdot \left(\frac{\partial L}{\partial u}\right)^{-1}$$

Multiplying this relation from the right with the PDE Jacobian $\partial L/\partial u$ and transposing leads to a single linear system of equations

$$\frac{\partial L}{\partial u}^T \cdot u^* = \frac{\partial Q}{\partial u}$$

using the transpose of the original PDE Jacobian.

Specification of the Objective Function

The objective function can in general be a sum of a number of terms:

$$Q(u,\xi) = Q_{\text{global}}(u,\xi) + Q_{\text{probe}}(u,\xi) + \sum_{k=0}^{n} Q_{\text{int},k}(u,\xi)$$

where n is the space dimension of the multiphysics model and the different contributions in the sum above are defined as follows:

- Q_{global} is the *global contribution* to the objective function Q. It is given as one or more general global expressions.
- Q_{probe} is a *probe contribution* to the objective function Q. It is a *probe objective*, so its definition is restricted to a point on a given geometrical entity. The *probe point* used for the point evaluation is a point given by the user and has to be contained in the domain.
- $Q_{\text{int},k}$ is an *integral contribution* to the objective function Q. It is an *integral objective*, so its definition is restricted to a specific set of geometrical entities of the same dimension. For integral contributions on points, the integration reduces to a summation.

Several global, probe, and integral contributions can be defined. In such cases, the total global, probe, and integral contribution is given as the sum of the aforementioned global, probe, and integral contributions that are actively selected in the solver settings for the optimization.

Choosing a Sensitivity Method

To evaluate sensitivities as part of a multiphysics problem solution, an auxiliary linear problem must be solved, in addition to the original equation, using one of these methods:

- Select one of the Forward Sensitivity methods to evaluate the derivatives of all solution variables and an optional objective function.
- Select the Adjoint Sensitivity method to look only at derivatives of a scalar objective function.

FORWARD SENSITIVITY

Use the forward (or forward numeric) sensitivity method to solve for the derivatives of all dependent variables, plus an optional scalar objective function, with respect to a small number of control variables. The forward method requires one extra linear system solution for each control variable.

The linear system that must be solved is the same as the last linearizion needed for solving the forward model. Thus, when using a direct solver (for example, PARDISO) the extra work amounts only to one back-substitution per control variable DOF. The forward numeric method uses numerical perturbation rather than analytical methods to calculate forward sensitivities, and can be used when the analytical method fails for some reason or as a tool to verify that the analytical method is correct. In addition, the forward numeric method requires two additional residual evaluations. The iterative linear and segregated solvers can reuse preconditioners and other data but must otherwise perform a complete solution each time. Further, the forward numeric method only differentiates the PDE problem numerically (giving a numeric method for the forward sensitivity). The objective sensitivity is still differentiated analytically (both with respect to the controls and with respect to the PDE variables). The functional sensitivity is therefore computed with a hybrid method.

ADJOINT SENSITIVITY

The adjoint method solves for the derivatives of a single scalar objective function with respect to any number of control variables, requiring only one single additional linear system solution. In addition to the objective function gradient, the discrete adjoint solution is computed. This quantity represents the sensitivity of the objective function with respect to an additional generalized force applied as a nodal force to the corresponding solution component.

The auxiliary linear system is in this case the transpose of the last linearizion needed for solving the forward model. The MUMPS and PARDISO linear solvers can solve the transposed problem at the cost of a back-substitution, while the SPOOLES linear solver needs to do a new factorization if the problem is not symmetric or Hermitian. The iterative solvers can reuse most preconditioning information as can the segregated solver, which, however, loops over the segregated steps in reversed order.

	Sensitivity analysis can be used together with all stationary and parametric standard solvers and with the BDF solver for transient studies. The available solvers are described in the section Studies and Solvers.

Postprocessing Sensitivities

When a multiphysics problem is solved using sensitivity analysis, the generated solution contains stored sensitivity data. You can access this data in postprocessing using the `fsens` and `sens` operators:

- `fsens(<control_variable>)` evaluates the sensitivity (derivative) of the objective function with respect to the specified control variable. This result is available for all sensitivity methods. The result of `fsens` can be evaluated on the geometric entities where the control variable is defined. For a global control variable, `fsens` is available everywhere. In the same way, `fsensimag(<control_variable>)` evaluates the sensitivity (derivative) of the objective function with respect to the imaginary part of the specified control variable.
- `sens(<dependent_variable>,<control_variable>)` or `sens(<dependent_variable>,<control_DOF>)` evaluates the sensitivity (derivative) of the specified dependent variable with respect to the specified control variable degree of freedom. This is only possible when forward sensitivity has been used, which computes and stores derivatives of the entire solution vector with respect to each control variable degree of freedom.

  Global control variables can be identified by name. Otherwise, control variable degrees of freedom are identified by their index (starting from 1) among all control variables in the solution vector. The result of `sens` has the same geometric scope as the dependent variable argument; it can be plotted or evaluated wherever the dependent variable itself is available.

Issues to Consider Regarding the Control Variables

THE EFFECT OF DISCRETIZATION

The sensitivity analysis is always performed on the discretized system of equations. As already mentioned, the control variables can be a scalar, vector, or an element in some infinite-dimensional function space. In the latter case, it is represented on the finite element mesh, just like the solution variables, or global scalar quantities. When using a control variable field represented on the finite element mesh, the sensitivities are therefore associated with individual control variable degrees of freedom rather than with the field value at each point. This makes it difficult to interpret the result. For example, if a domain control variable is set up using a first-order Lagrange shape function representation to control the material density in a model, the solution contains the sensitivity of the objective function with respect to the discrete density value at each node point in the mesh. Because each node influences the density in a small surrounding region, the size of which varies from node to node, the individual sensitivities are not directly comparable to each other.

Displaying such domain control variables results in a plot that is not smooth due to the varying element size. It must therefore not be used to draw any conclusions about the physics and the effect of changing the physical field represented by the control variable. Some insight can, however, be gained by looking at the sensitivities divided by the mesh volume scale factor `dvol`. This makes the sensitivities in the plot comparable between different parts of

the surface but still not mathematically well defined. In particular, using discontinuous constant shape functions together with the division by `dvol` results in a plot that is proportional to the true pointwise sensitivity.

	If the plan is to use the sensitivities in an automatic optimization procedure, as is done through the Optimization interface available with the Optimization Module, the discrete nature of the sensitivities causes no additional complication. The optimization solver searches for optimum values of the discrete control variables using the discrete gradient provided by the sensitivity analysis.

GEOMETRICAL SENSITIVITY

You can use the control variables directly to parameterize any aspect of the physics that is controlled by an expression. This applies to material properties, boundary conditions, loads, and sources. However, the shape, size, and position of parts of the geometry cannot be changed as easily at solution time and require special attention.

Control variables cannot be used directly in the geometry description. Instead, the model must be set up using a Deformed Geometry or Moving Mesh interface to control the shape of the geometry. Then use control variables to control the mesh movement, effectively parameterizing the geometry.

	See Deformed Geometry and Moving Mesh for details about these interfaces and ALE in general.

Issues to Consider Regarding the Objective Function

THE PRINCIPLE OF VIRTUAL WORK

Potential energy has a special status among scalar objective functions because its derivatives with respect to scalar control variables can in many cases be interpreted as (true or generalized) forces.

COMPLEX-VALUED OBJECTIVE FUNCTIONS

Sensitivity analysis can be directly applied only when the objective function is a real differentiable or complex analytic function of the control variables. This is usually not a severe constraint, even for frequency-domain models where the PDE solution variables are complex valued. One reason is that physical quantities of interest to the analyst are always real valued, and if complex-valued control variables are required, it is possible to treat the real and imaginary parts separately.

Some PDE problem or the objective functions are, however, nonanalytic. This is the case, for example, when the equations or the objective function contain `real()`, `imag()`, or `abs()`. One solution in such cases is to enable **Split complex variables in real and imaginary parts** in the **Compile Equations** node corresponding to the study step for which sensitivity is computed. This converts the discretized PDE system from a complex-valued system to a real-valued system of double size, with separate degrees of freedom for the real and imaginary part. For this split system, also the nonanalytic functions are differentiable almost everywhere such that sensitivities can be computed.

One special form of nonanalytic objective functions can be treated more efficiently than splitting the variables: many common quantities of interest are harmonic time averages, which can be written in the form $Q = \mathrm{real}(a \cdot \mathrm{conj}(b))$, where a and b are complex-valued linear functions of the solution variables and therefore implicit functions of the control variables. The problem with this expression is that, while Q is indeed a real-valued differentiable function of the control variables, it is not an analytical function of a and b. This complicates matters slightly because the sensitivity solver relies on symbolic partial differentiation and the chain rule.

While the partial derivatives of Q with respect to a and b are, strictly speaking, undefined, it can be proven that if they are chosen such that

$$Q(a+\delta a, b+\delta b) \approx Q(a,b) + \mathrm{real}\left(\frac{\partial Q}{\partial a}\delta a + \frac{\partial Q}{\partial b}\delta b\right) \tag{17-3}$$

for any small complex increments δa and δb, the final sensitivities are evaluated correctly. The special function `realdot(a,b)` is identical to `real(a*conj(b))` when evaluated but implements partial derivatives according to Equation 17-3. For that reason, use it in the definition of any time-average quantity set as objective function in a sensitivity analysis.

Issues to Consider Regarding Constraints

The theory behind sensitivity analysis as presented above (under Theory for Stationary Sensitivity Analysis) assumes that constraints on the multiphysics problem are handled in the same way as with any other equations. This is indeed the case for *weak constraints*, which are implemented as a part of the main system of equations. Standard pointwise constraints are instead eliminated from the discretized equations at an early stage in the solution process. This elimination is not visible to the sensitivity solver, which therefore may miss some symbolic derivative terms necessary for computing a correct sensitivity.

In particular, if the mixed second derivative of a standard constraint with respect to both PDE solution and control variables is nonzero, sensitivity will not be correctly computed. For example, for a solution variable u and a control variable p, a constraint:

- $u = p$ will give correct sensitivity.
- $u^2 = p^2$ will give correct sensitivity.
- $u^2 = up$ will give incorrect sensitivity.

If your multiphysics model contains constraints of the problematic type, you can still compute a correct sensitivity, provided that you enable *weak constraints* in the **Constraint Settings** section of the corresponding boundary condition node.

	For technical details about the solver implementation, see The Sensitivity Analysis Algorithm. For more about the standard versus the weak constraints, see Boundary Conditions.

The Sensitivity Interface

The **Sensitivity (sens)** interface ( ), found under the **Mathematics>Optimization and Sensitivity** ( ) branch when adding a physics interface, provides tools for adding advanced sensitivity evaluation to a stationary model. Basic problems defined only in terms of global scalar objective functions and model parameters can be set up directly in a Sensitivity study step and therefore do not require the use of a Sensitivity interface.

	For a more extensive introduction to the mathematics implemented by this physics interface, see the Theory for the Sensitivity Interface.

The objective functions are defined in terms of control and solution variables (the latter are given as the solution to the differential equations defined by the multiphysics model), which can be fields dependent on position in space or scalar quantities defined globally. This flexibility is reflected in the physics interface by grouping these settings according to the dimension of the domain to which they apply. In such a group of settings, the following settings can be specified, to which each corresponds a separate feature and its Settings window:

- Integral Objective
- Probe Objective
- Control Variable Field

	Note that adding a Sensitivity study step to a study makes it possible to perform a sensitivity analysis directly at the study level. See Sensitivity.

SENSITIVITY TOOLBAR

The following nodes are available from the **Sensitivity** ribbon toolbar (Windows users), **Sensitivity** context menu (Mac or Linux users), or by right-clicking to access the context menu (all users).

	For step-by-step instructions and general documentation descriptions, this is the **Sensitivity** toolbar.

TABLE 17-1: THE SENSITIVITY TOOLBAR

BUTTON OR MENU	NAME
Physics	
	Add Physics
Global	
	Global Objective
	Global Control Variables

The main **Settings** window for the **Sensitivity** node contains the following section:

SETTINGS

The **Label** is the default physics interface name.

The **Name** is used primarily as a scope prefix for variables defined by the physics interface. Refer to such physics interface variables in expressions using the pattern `<name>.<variable_name>`. In order to distinguish between variables belonging to different physics interfaces, the `name` string must be unique. Only letters, numbers, and underscores (_) are permitted in the **Name** field. The first character must be a letter.

The default **Name** (for the first physics interface in the model) is `sens`.

	• Common Physics Interface and Feature Settings and Nodes • Global Objective • Global Control Variables

	Sensitivity Analysis of a Communication Mast Detail: Application Library path **COMSOL_Multiphysics/Structural_Mechanics/mast_diagonal_mounting_sensitivity**

Integral Objective

An **Integral Objective** is defined as the integral of a closed form expression of control and solution variables (the latter are given as the solution to the differential equations defined by the multiphysics model) that are either global or available in the domain in question. Hence, its definition is restricted to a set of geometric entities of the same dimension. For integral objectives on points, the integration reduces to a summation.

OBJECTIVE

Enter an **Objective expression** that is integrated over the geometric entity level in the integral objective.

QUADRATURE SETTINGS

Specify the settings for the **Quadrature** used to numerically evaluate the integral in the integral objective: the integration order (default: 4) in the **Integration order** field and the frame to integrate on (default: the spatial frame), which is selected from the **Integrate on frame** list.

Probe Objective

A **Probe Objective** is defined as a point evaluation of a closed form expression of control and solution variables (the latter are given as the solution to the differential equations defined by the multiphysics model) that are either global or available in the domain in question. The point used for the point evaluation has to be contained in the domain.

OBJECTIVE

Enter an **Objective expression** that is evaluated at the point in the domain.

PROBE COORDINATES

Specify the **Probe coordinates** for the point in the domain where the expression for the objective is evaluated. After specifying the probe coordinates, select an option from the **Evaluate in frame** — **Spatial** (the default), **Material**, or **Mesh**.

Control Variable Field

Specify the **Control Variable Field** specific to the geometric entity level (domain, edge, boundary, or point) in question.

CONTROL VARIABLE

Enter a **Control variable name** and **Initial value**.

DISCRETIZATION

This section contains settings for the element used to discretize the control variable. Select a **Shape function type**: **Lagrange** (the default) or **Discontinuous Lagrange**. Also select an **Element order**: **Linear**, **Quadratic** (the default), **Cubic**, **Quartic**, or **Quintic**. The value type (complex or real) for all the variables defined by this **Global Equations** node is selected in the **Value type when using splitting of complex variables** selection. The default value type is **Complex**.

	Common Physics Interface and Feature Settings and Nodes

Global Objective

Specify the **Global Objective** contribution to the function by entering an objective expression. To add this feature, either right-click the **Sensitivity** interface node and select it from the context menu, or on the **Physics** toolbar, click **Global Objective** ( ).

OBJECTIVE

Enter an **Objective expression** that defines the contribution to the objective function. It can be an expression of those components of the control and solution variable (the solution variable is given as the solution to the differential equations defined by the multiphysics model) that are globally available.

Global Control Variables

Use the **Global Control Variables** node to specify any globally available control variables. To add this feature, either right-click the **Sensitivity** interface node and select it from the context menu, or on the **Physics** toolbar, click **Global Control Variables** ( ).

CONTROL VARIABLES

In the table, enter **Variable** names and **Initial values** of the control variables that are globally available. To add a control variable to the table, click the **Add** button ( ). To remove a control variable and its values from the table, click the **Delete** button ( ).

18

Deformed Geometry and Moving Mesh

This chapter explains how to use the moving mesh functionality for adding moving meshes to COMSOL Multiphysics models. There is also information about the dedicated interfaces that control mesh deformation, which you find under the **Mathematics>Deformed Mesh** branch ( ) when adding physics interfaces to a model. It also contains fundamentals about deformed meshes and information about the Eulerian and Lagrangian formulations of the physics, the frame types that support these formulations, and the arbitrary Lagrangian-Eulerian (ALE) method.

In this chapter:

- Deformed Mesh Fundamentals
- Moving Mesh Features
- Deformed Geometry Features
- The Moving Mesh Interface
- The Deformed Geometry Interface

Deformed Mesh Fundamentals

About Deformed Meshes

A deformed mesh can be useful if the boundaries of your computational domain are moving in time or deform as a function of some parameter. The deformation can also be physics-induced — for example, depending on computed velocities or solid deformation. The point is that a new mesh need not be generated for each configuration of the boundaries — instead, the software perturbs the mesh nodes so they conform with the moved boundaries.

In COMSOL Multiphysics, you can control the movement of the interior nodes in these ways:

- By propagating the moving boundary displacement throughout the domain to obtain a smooth mesh deformation everywhere. This is done by solving PDEs for the mesh displacements (a Laplace or Winslow smoothing PDE, or one borrowed from continuum mechanics) with boundary conditions given by the movement of the boundaries.
- By specifying an explicit formula for the mesh deformation. The formula can make use of other dependent variables, such as the displacement components of structural mechanics.
- By leaving the control of the mesh displacement to a Solid Mechanics interface, which has built-in deformed mesh functionality.

Deformed Geometry vs. Moving Mesh

You can set up mesh deformation in two different ways, depending on the intended behavior of the model: either the deformation represents a fundamental change in the shape of the geometry, or it represents the shape change induced by deformation of solid materials. COMSOL Multiphysics refers to the former as *Deformed Geometry* and the latter as *Moving Mesh* functionality. Technically, the difference is that Deformed Geometry functionality deforms the material frame mesh relative to the geometry frame mesh, while Moving Mesh functionality deforms the spatial frame mesh relative to the material frame mesh. Both types of deformation can be used at the same time, one on top of the other.

The features and interfaces that let you specify the deformation of the material and spatial frame meshes, respectively, are the same in both cases, but are found in different places in the Model Builder tree. You can control the mesh deformations either using features under **Definitions>Moving Mesh** and **Definitions>Deformed Geometry** in a Component, or by adding a **Deformed Geometry** ( ) or **Moving Mesh** ( ) interface from the **Mathematics>Deformed Mesh** branch ( ) in the **Model Wizard** or **Add Physics** window.

	The features available in the **Definitions** branch are slightly less general than some available in the corresponding interfaces. But the ones under **Definitions** have the advantage that physics interfaces can be aware of and interact with them, something which is important, e.g., for fluid structure interaction (FSI) and rotating machinery or mixer applications.

When using Deformed Geometry functionality, the material does not follow the change in shape. Deformation of the geometry boundaries therefore corresponds to addition or removal of material. When using Moving Mesh features, solid materials follow the mesh deformation and deform in the same way as the mesh. Fluids and gases, however, are added or removed so as to always fill the current shape of the domain — any effects of compression or expansion must be introduced explicitly into the equations.

- Use Deformed Geometry features to study the behavior of different shapes of an original object. In a model with Deformed Geometry, the material never follows a perturbation of the shape. The total mass of the first shape is

not the same as the mass for the second, perturbed geometry. Any deformation can be regarded as removal or addition of material.

- Use Moving Mesh features to study how a solid object deforms as the results of physical load, and how fluids in adjacent domains react to displacement of the domain boundaries — for example, how a tank impeller moves a fluid, or how a MEMS switch moves under the influence of an electric field. In a model with Moving Mesh, a solid material follows the mesh deformation. A movement of a boundary can therefore be regarded as bending or punching the original object. Undeformed and deformed solid objects have the same mass, but the total amount of fluid in a domain whose boundaries deform can change.

Arbitrary Lagrangian-Eulerian Formulation (ALE)

The partial differential equations of physics are usually formulated either in a *spatial* coordinate system, with coordinate axes fixed in space, or in a *material* coordinate system, fixed to the material in its reference configuration and following the material as it deforms. The former is often referred to as an *Eulerian* formulation, while the latter is a *Lagrangian* formulation.

Structural mechanics and other fields of physics dealing with a possibly anisotropic, solid material are most conveniently simulated using material coordinates. The Lagrangian formulation makes the anisotropic material properties independent of the current spatial orientation of the material.

However, if the focus is on simulating the physical state at fixed points in space, an Eulerian formulation is usually more convenient. In particular, when liquids and gases are involved, it is often unreasonable to track the state of individual material particles. Rather, the quantities of interest are pressure, temperature, concentration, and so forth, at fixed positions in space.

An inherent problem with the pure Eulerian formulation is that it cannot handle moving domain boundaries, since physical quantities are referred to fixed points in space, while the set of spatial points inside the domain boundaries changes with time. Therefore, to allow moving boundaries, the Eulerian equations must be rewritten so as to describe all physical quantities as functions of some coordinate system in which the domain boundaries are fixed. The finite element mesh offers one such system: the *mesh* coordinates.

In the mesh coordinate system, the domain is fixed, and there is a one-to-one map from the mesh coordinates to the current spatial configuration of the domain. Otherwise, the mesh coordinate system can be defined freely and separately from both the spatial and material systems. The natural choice is to let the mesh coordinate system, at least initially, coincide with the *geometry* coordinates. This follows immediately from the way meshes are created and means that points in the domain are identified by their position in the original geometry.

As the domain and mesh deform, the map from mesh coordinates to spatial coordinates can become increasingly ill-conditioned. Before the degradation of the mesh mapping goes too far, you can, using a remeshing operation, stop the simulation, create a new mesh in the current configuration of the domain, and map all quantities to the new mesh. When you restart the simulation, points in the domain are internally identified by their new mesh coordinates, which coincide with the spatial coordinates at the state where the simulation was stopped. Therefore, the geometry and mesh coordinates of a given point differ after remeshing the deformed geometry.

Rewriting physics equations in this way, on a freely moving mesh, results in an *arbitrary Lagrangian-Eulerian* (ALE) method. In the special case when the map from mesh coordinates to spatial coordinates follows the material deformation, a Lagrangian method is recovered. Similarly, when the map is an identity map, the ALE method becomes entirely Eulerian.

The ALE method is therefore an intermediate between the Lagrangian and Eulerian methods, and it combines the best features of both: it allows moving boundaries without the need for the mesh movement to follow the material.

About Frames

The COMSOL Multiphysics software refers to the spatial, material/reference, geometry, and mesh coordinate systems described above as *spatial frame*, *material frame* (reference frame), *geometry frame*, and *mesh frame*, respectively. Physics can be formulated in the spatial frame or in the material frame, depending on whether it is more convenient to interpret the equations as Eulerian or Lagrangian, respectively. It is not possible to use the geometry and mesh frames and their associated coordinates to formulate physics because they are neither connected to the material nor to the true Euclidean space.

Conceptually, all four frames always exist, with their own separate coordinate names:

- The spatial frame coordinates are by default `x`, `y`, `z`, or `r`, `phi`, `z` in an axisymmetric geometry.
- The material frame coordinates are by default `X`, `Y`, `Z`, or `R`, `PHI`, `Z` in an axisymmetric geometry.
- The geometry frame coordinates are by default `Xg`, `Yg`, `Zg`, or `Rg`, `PHIg`, `Zg` in an axisymmetric geometry.
- The mesh frame coordinates are by default `Xm`, `Ym`, `Zm` or `Rm`, `PHIm`, `Zm` in an axisymmetric geometry.

You can change these names in the **Settings** window of a Component. Initially, all frames coincide and their coordinates evaluate to the same value at any given point in the mesh; technically, the spatial, material and geometry coordinates are all aliases for the mesh coordinates.

When a Moving Mesh feature is added to a component, or a structural mechanics interface is added and **Include geometric nonlinearity** is switched on in a study step, the spatial frame is separated from the material frame. From this point, spatial and material coordinates will evaluate differently at a given point in the mesh. Eulerian and Lagrangian formulations behave differently because they, among other things, define derivatives with respect to different sets of independent variables.

The geometry frame and the material frame coordinates coincide until a Deformed Geometry feature is added, or you enable shape optimization (available with the Optimization Module). From that point, the geometry frame coordinates refer to the geometry as it is represented by the Geometry Sequence, while the material frame coordinates represent the geometry seen by physics interfaces. By inserting a nontrivial transformation from geometry coordinates to material coordinates, the shape of the geometry can be effectively changed without having to create a new mesh. This can be useful as a means of parameterizing the geometry, for example, before performing optimization or sensitivity analysis.

Using Deformed Geometry features affects both Eulerian and Lagrangian physics in the same way. The reason is that the Deformed Geometry interface controls the material frame in relation to the geometry frame. Unless there is also a Moving Mesh or Solid Mechanics interface present, the material frame and spatial frame coordinates still coincide, so the spatial mesh is deformed in the same way as the material mesh. The three frames refer to three different sets of coordinates only when there is both some Deformed Geometry feature and some Moving Mesh feature active in the Component.

The geometry frame and the mesh frame coincide until a manual or automatic remeshing operation is performed. At that point, a new mesh is created in the original geometry, and mesh frame coordinates are associated with this new mesh. The original geometry coordinates are mapped and stored together with the new mesh such that any Deformed Geometry interface can still define the material frame relative to the original geometry shape.

To avoid confusion, note that:

- The *spatial frame* is the usual, fixed, global, Euclidean coordinate system with the *spatial coordinates* (x, y). In the ALE context, the spatial coordinate system as such is fixed, while the spatial coordinates (x, y) of each material point and mesh node can be functions of time. Therefore, it is correct to refer to the model as having a *moving mesh*.
- The *material frame* is a coordinate system that identifies material points by their spatial coordinates (X, Y) in some — actual or imagined — reference configuration. Think of the material coordinate system as having been

printed on the material in the reference configuration such that it follows it during deformation. It is therefore in general curvilinear and cannot be used directly to measure true distances and angles. See also Figure 18-1 and Figure 18-2.

- The *geometry frame* is a coordinate system that identifies points by their spatial coordinates (X_g, Y_g) in the original geometry. It is often natural to use the original geometry also as reference state to define material coordinates. Therefore, the geometry frame and material frame usually coincide. The only exception is when some Deformed Geometry feature is used to deform or parameterize the original geometry.
- The *mesh frame* is a coordinate system used internally by the finite element method. It identifies mesh points by their spatial coordinates (X_m, Y_m) at the time the mesh was created. The original mesh is always created based on the original geometry. Therefore, the mesh frame coincides with the geometry frame until a new mesh is created in the — then current — deformed configuration.

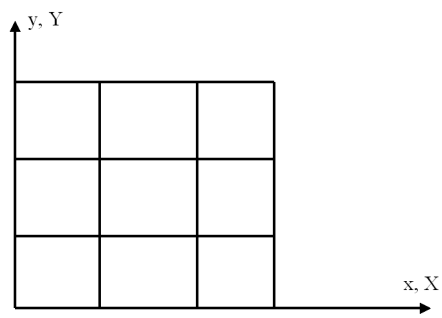

Figure 18-1: An undeformed mesh. In the reference configuration, which can be the actual configuration at a reference time or a hypothetical state, the spatial frame (x, y) and the material frame (X, Y) coincide.

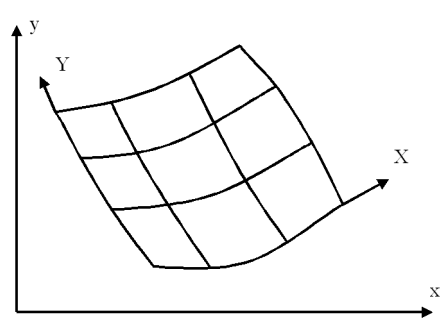

Figure 18-2: After deformation of the material, the spatial frame (x, y) remains the same, while the material coordinate system (X, Y) has been deformed, following the material. Meanwhile, the material coordinates of each material point remain the same but its spatial coordinates have changed.

Mathematical Description of the Mesh Movement

Consider a 2D geometry for simplicity, where the spatial and material frame coordinates are called (x, y) and (X, Y), respectively. Let (X_0, Y_0) be the coordinates of a mesh node in the initial material configuration. The spatial coordinates (x_0, y_0) of the same mesh node at some other time, t, are then given by the functions

$$x_0 = x(X_0, Y_0, t), \qquad y_0 = y(X_0, Y_0, t) \tag{18-1}$$

These functions can be explicit transformations (expressions) or the solution to a mesh smoothing equation. The mesh node's material coordinates (X_0, Y_0) can in turn be seen as functions of an underlying system of geometry coordinates (X_g, Y_g) and a parameter, p, such that

$$X_0 = X(X_g, Y_g, p), \qquad Y_0 = Y(X_g, Y_g, p) \tag{18-2}$$

with similar options for the transformations. The transformations can also be chained such that (x_0, y_0) are seen as functions of (X_g, Y_g), t, and p.

Introducing a vector notation for the coordinates:

- Spatial coordinates $\mathbf{x} = [x, y, z]$
- Material coordinates $\mathbf{X} = [X, Y, Z]$
- Geometry coordinates $\mathbf{X}_g = [X_g, Y_g, Z_g]$
- Mesh coordinates $\mathbf{X}_m = [X_m, Y_m, Z_m]$

The general relation between the frames can be written

$$\begin{aligned} \mathbf{x} &= \mathbf{f}(\mathbf{X}, t) = \mathbf{f}(\mathbf{g}(\mathbf{X}_g, p), t) \\ \mathbf{X} &= \mathbf{g}(\mathbf{X}_g, p) \\ \mathbf{X}_m &= \mathbf{h}(\mathbf{X}_g, i) \end{aligned} \tag{18-3}$$

where $\mathbf{f}$, $\mathbf{g}$, and $\mathbf{h}$ are vector-valued functions, t is time, p is some set of parameters controlling Deformed Geometry features, and i is number of times the geometry has been remeshed. From the physics point of view, the domain is fixed in the geometry frame coordinates $\mathbf{X}_g$, which are therefore seen as constant in the above formulas.

From the finite elements' point of view, it is instead the mesh frame coordinates $\mathbf{X}_m$ that are constant and $\mathbf{X}_g = \mathbf{h}^{-1}(\mathbf{X}_m, i)$. Therefore when assembling the finite-element matrices, the relation actually used is

$$\mathbf{x} = \mathbf{f}(\mathbf{g}(\mathbf{h}^{-1}(\mathbf{X}_m, i), p), t)$$

where $\mathbf{f}$ is a unit map if the spatial and material frames coincide, $\mathbf{g}$ is a unit map if the material and geometry frames coincide, and the inverse mapping $\mathbf{h}^{-1}(\mathbf{X}_m, i)$ is initially a unit map and then updated by interpolation after each remeshing operation.

In addition to the different sets of coordinate variables, some other geometric variables that the software defines are available for both the spatial and material frames (see Geometric Variables, Mesh Variables, and Variables Created by Frames).

Derivatives of Dependent Variables

When solving for some physical quantity, u, COMSOL Multiphysics always stores the solution for a fixed set of mesh nodes. That is, the dependent variable u is treated internally as a function of the mesh coordinates and possibly time, $u(X_m, Y_m, t)$. The essence of the ALE system is that it allows treating the physical quantities as functions of the material or spatial coordinates, $u(X, Y, t)$ or $u(x, y, t)$, instead. This transformation is possible only if the mappings given by Equation 18-1 and Equation 18-2 are invertible.

DIFFERENTIATION IN SPACE

With respect to spatial differentiation, each dependent variable is treated as a function of one or more of the frames present in the model. Most physics interfaces are based on a formulation which is either Eulerian or Lagrangian. Their equations therefore contain derivatives of the dependent variables with respect to either the spatial or the material frame, respectively. A few physics interfaces can formulate their equations in either material or spatial frame, as set by the **Frame** setting found under **Discretization** in the physics interface node's settings.

For compactness, physics interface equations are written using derivative variables. For a dependent variable `u`, there are two basic possibilities:

- The variable is used primarily as a function of spatial coordinates. Derivatives with respect to the spatial frame are therefore defined as variables, denoted `ux` and `uy` in the software.
- The variable is used primarily as a function of material coordinates. Derivatives with respect to the material frame are therefore defined as variables, denoted `uX` and `uY` in the software.

But in many cases both sets of derivative variables exist even if they are not used by the physics interface. In addition, the built-in differentiation operator `d(<expr>,<var>)` can always compute derivatives with respect to any set of coordinates, internally using the chain rule. For example, the first component of the spatial, material, and geometry frame gradients of `u` are, respectively `d(u,x)`, `d(u,X)`, and `d(u,Xg)`.

DIFFERENTIATION IN TIME

When using ALE, there can be two kinds of time derivatives:

- The *frame time derivative*, valid for a fixed point in either the material or the spatial frame. This derivative is denoted `ut` in some physics interfaces. It is defined either as

  $$u_t(x_0, y_0) = \left.\frac{\partial u}{\partial t}\right|_{x_0, y_0}$$

  in interfaces using an Eulerian formulation, or as

  $$u_t(X_0, Y_0) = \left.\frac{\partial u}{\partial t}\right|_{X_0, Y_0}$$

  in interfaces using a Lagrangian formulation.
- The *mesh time derivative*, which is taken for a fixed point in the mesh:

  $$u_{\mathrm{TIME}}(X_m, Y_m) = \left.\frac{\partial u}{\partial t}\right|_{X_m, Y_m}$$

  This derivative is in many cases denoted `uTIME` in the software. Since internally, everything is formulated on the mesh frame, the mesh time derivative is the one computed by the solvers and stored in the solution vector.

	While the variable `t` represents the current value of the time in all frames, differentiation must be performed with respect to the symbol `TIME` only. The operator expression `d(<expr>,TIME)` is always allowed and evaluates to the mesh time derivative of `<expr>`. Because of its ambiguous meaning, the expression `d(<expr>,t)` is illegal if `<expr>` contains any variables that are functions of space.

The two derivatives are related by the chain rule. For example, for a spatial frame derivative:

$$u_t = u_{\mathrm{TIME}} - u_x x_{\mathrm{TIME}} - u_y y_{\mathrm{TIME}}$$

where $[u_x, u_y]$ is the spatial frame gradient and $(x_{\mathrm{TIME}}, y_{\mathrm{TIME}})$ is the spatial mesh velocity. The mesh time derivative is often less important from the user point of view because its value depends on the mesh movement, which in itself often has no physical significance. However, for the special case when the mesh follows the material's motion, the mesh time derivative is physically significant and is also called the *material time derivative*.

You can evaluate the time derivatives with respect to the different frames using frame-specific time-derivative operators `spatial.dt(<expr>)`, `material.dt(<expr>)`, `geometry.dt(<expr>)`, and `mesh.dt(<expr>)`. The two last are by definition equal to `d(<expr>,TIME)`.

Transformation Matrices and Volume Factors

The ALE machinery defines a number of variables based on the relations in Equation 18-3. The variables and component names are listed in Table 18-1, where indices i and j are 1, 2, or 3. A more detailed explanation of the variables follows below.

TABLE 18-1: GEOMETRIC VARIABLES AND MESH VARIABLES

VARIABLE	COMPONENTS	DESCRIPTION
`spatial.F`	`spatial.F`ij	The Jacobian of spatial coordinates $\mathbf{x}$ with respect to material coordinates $\mathbf{X}$.
`spatial.invF`	`spatial.invF`ij	The Jacobian of material coordinates $\mathbf{X}$ with respect to spatial coordinates $\mathbf{x}$; the inverse of `spatial.F`.
`spatial.detF`	`spatial.detF`	The ratio of local element volume computed in the spatial frame to volume computed in the material frame; the determinant of `spatial.F` in elements of the same dimension as the geometry.
`spatial.detInvF`	`spatial.detInvF`	The ratio of local element volume computed in the material frame to volume computed in the spatial frame; the determinant of `spatial.invF` in element of the same dimension as the geometry.
`material.F`	`material.F`ij	The Jacobian of material coordinates $\mathbf{X}$ with respect to geometry frame coordinates $\mathbf{X_g}$
`material.invF`	`material.invF`ij	The Jacobian of geometry frame coordinates $\mathbf{X_g}$ with respect to material coordinates $\mathbf{X}$; the inverse of `material.F`.
`material.detF`	`material.detF`	The ratio of local element volume computed in the material frame to volume computed in the geometry frame; the determinant of `material.F` in elements of the same dimension as the geometry.
`material.detInvF`	`material.detInvF`	The ratio of local element volume computed in the geometry frame to volume computed in the material frame; the determinant of `material.invF` in element of the same dimension as the geometry.

3D, PLANE 2D AND 1D GEOMETRIES

spatial.F The matrix `spatial.F` contains components of the Jacobian of spatial coordinates with respect to material coordinates:

$$\begin{bmatrix} \text{spatial.F11} & \text{spatial.F12} & \text{spatial.F13} \\ \text{spatial.F21} & \text{spatial.F22} & \text{spatial.F23} \\ \text{spatial.F31} & \text{spatial.F32} & \text{spatial.F33} \end{bmatrix} = \begin{bmatrix} \frac{\partial x}{\partial X} & \frac{\partial y}{\partial X} & \frac{\partial z}{\partial X} \\ \frac{\partial x}{\partial Y} & \frac{\partial y}{\partial Y} & \frac{\partial z}{\partial Y} \\ \frac{\partial x}{\partial Z} & \frac{\partial y}{\partial Z} & \frac{\partial z}{\partial Z} \end{bmatrix}$$

Rows of the matrix can be interpreted as the global material coordinate system's covariant base vectors expressed using contravariant components in the global spatial coordinate system. Conversely, columns can be interpreted as the global spatial coordinate system's contravariant base vectors expressed using covariant components in the global material coordinate system. The matrix therefore transforms contravariant material components of a vector,

multiplying the matrix from the left, into contravariant spatial components. It also transforms covariant spatial components of a vector, by multiplication from the right, into covariant material components.

	Note that `spatial.F` is the transpose of the deformation gradient defined by Structural Mechanics.

spatial.invF The matrix `spatial.invF` contains the inverse of `spatial.F`, which consists of components of the Jacobian of material coordinates with respect to spatial coordinates:

$$\begin{bmatrix} \text{spatial.invF11} & \text{spatial.invF12} & \text{spatial.invF13} \\ \text{spatial.invF21} & \text{spatial.invF22} & \text{spatial.invF23} \\ \text{spatial.invF31} & \text{spatial.invF32} & \text{spatial.invF33} \end{bmatrix} = \begin{bmatrix} \frac{\partial X}{\partial x} & \frac{\partial Y}{\partial x} & \frac{\partial Z}{\partial x} \\ \frac{\partial X}{\partial y} & \frac{\partial Y}{\partial y} & \frac{\partial Z}{\partial y} \\ \frac{\partial X}{\partial z} & \frac{\partial Y}{\partial z} & \frac{\partial Z}{\partial z} \end{bmatrix}$$

Rows of the matrix can be interpreted as the global spatial coordinate system's covariant base vectors expressed using contravariant components in the global material coordinate system. Conversely, columns can be interpreted as the global material coordinate system's contravariant base vectors expressed using covariant components in the global spatial coordinate system. The matrix therefore transforms contravariant spatial components of a vector, multiplying the matrix from the left, into contravariant material components. It also transforms covariant material components of a vector, by multiplication from the right, into covariant spatial components.

spatial.detF and spatial.detInvF The volume/area/length factor `spatial.detF` and its inverse `spatial.detInvF` are ratios of local element volume/area/length computed in the spatial and material frames. That is, these variables are the factors necessary to compute a spatial frame integral of quantity over a set of elements of any dimension, using material frame coordinates, or the other way around:

$$\int_D f(\mathbf{x})\mathbf{dx} = \int_D f(\mathbf{X})\text{detF}\mathbf{dX}$$

$$\int_D f(\mathbf{X})\mathbf{dX} = \int_D f(\mathbf{x})\text{detInvF}\mathbf{dx}$$

where D is a set of volume, surface, line or point elements. This means that `spatial.detF` is a ratio of volumes in domains of 3D models, a ratio of areas in domains of plane 2D models and on boundaries of 3D models, and a ratio of lengths on boundaries of 2D models and edges in 3D models. On points, `spatial.detF` is equal to 1.

material.F, material.invF, material.detF, and material.detInvF These variables are defined in complete analogy with the corresponding `spatial` variables, but based on the relation between material frame coordinates $\mathbf{X}$ and geometry frame coordinates $\mathbf{X_g}$.

AXISYMMETRIC GEOMETRIES

Axisymmetric geometries are treated like 3-dimensional solids for the purpose of defining transformation matrices and volume factors variables. In particular, radial displacement of the mesh induces a non-unit transformation in the azimuthal direction, in analogy with the azimuthal strain resulting from a radial displacement in an axisymmetric solid object. The transformation matrices `spatial.F` and `spatial.InvF` are:

$$\begin{bmatrix} \text{spatial.F11} & \text{spatial.F12} & \text{spatial.F13} \\ \text{spatial.F21} & \text{spatial.F22} & \text{spatial.F23} \\ \text{spatial.F31} & \text{spatial.F32} & \text{spatial.F33} \end{bmatrix} = \begin{bmatrix} \frac{\partial r}{\partial R} & 0 & \frac{\partial z}{\partial R} \\ 0 & \frac{r}{R} & 0 \\ \frac{\partial r}{\partial Z} & 0 & \frac{\partial z}{\partial Z} \end{bmatrix}$$

and

$$\begin{bmatrix} \text{spatial.invF11} & \text{spatial.invF12} & \text{spatial.invF13} \\ \text{spatial.invF21} & \text{spatial.invF22} & \text{spatial.invF23} \\ \text{spatial.invF31} & \text{spatial.invF32} & \text{spatial.invF33} \end{bmatrix} = \begin{bmatrix} \frac{\partial R}{\partial r} & 0 & \frac{\partial Z}{\partial r} \\ 0 & \frac{R}{r} & 0 \\ \frac{\partial Z}{\partial r} & 0 & \frac{\partial Z}{\partial z} \end{bmatrix}$$

The volume/area/length factors `spatial.detF` and `spatial.detInvF` also include the azimuthal strain factor r/R, such that they fulfill

$$\int_D f(r,z) r dr dz = \int_D f(R,Z) \text{detF} R dR dZ$$

$$\int_D f(R,Z) R dR dZ = \int_D f(r,z) \text{detInvF} r dr dz$$

where D is any set of surface, line or point elements in an axisymmetric geometry. This means that `spatial.detF` is a ratio of volumes in domains, a ratio of areas on boundaries and a ratio of lengths on point entities.

Smoothing Methods

In the domains with free displacement, the Deforming Domain feature and the Free features in the Moving Mesh and Deformed Geometry interface solve an equation for the mesh displacement. This equation smoothly deforms the mesh given the constraints placed on the boundaries. Choose between *Laplace smoothing*, *Winslow smoothing*, *hyperelastic smoothing*, and *Yeoh smoothing*.

To specify the smoothing methods, use the **Mesh smoothing type** list in the **Smoothing** section of the **Deforming Domain** node or in the **Free Deformation Settings** section of the **Moving Mesh** or **Deformed Geometry** node. To see how these smoothing methods differ, let x and y be the spatial coordinates of the spatial frame, and let X and Y be the reference coordinates of the material frame.

- If Laplace smoothing is selected, the software introduces deformed mesh positions x and y as degrees of freedom in the model. In the static case, it solves the equation

  $$\frac{\partial^2 x}{\partial X^2} + \frac{\partial^2 x}{\partial Y^2} = 0$$

  and in the transient case, it solves the equation

  $$\frac{\partial^2}{\partial X^2}\frac{\partial x}{\partial t} + \frac{\partial^2}{\partial Y^2}\frac{\partial x}{\partial t} = 0$$

  Similar equations hold for the y coordinate.
- If Winslow smoothing is selected, the software solves the equation

$$\frac{\partial^2 X}{\partial x^2} + \frac{\partial^2 X}{\partial y^2} = 0$$

and does the same for Y. Equivalently, X and Y satisfy Laplace equations as functions of the x and y coordinates.

- The hyperelastic smoothing method searches for a minimum of a mesh deformation energy inspired by neo-Hookean materials:

$$W = \int_\Omega \frac{\mu}{2}(I_1 - 3) + \frac{\kappa}{2}(J-1)^2 dV$$

where μ and κ are artificial shear and bulk moduli, respectively, and the invariants J and I_1 are given by

$$J = \det(\nabla_X x)$$
$$I_1 = J^{-2/3}\mathrm{tr}((\nabla_X x)^T \nabla_X x)$$

- The Yeoh smoothing method is also inspired by hyperelastic materials, in this case the three-term Yeoh hyperelastic model, which is a generalization of a neo-Hookean material. It uses a strain energy of the form

$$W = \frac{1}{2}\int_\Omega C_1(I_1 - 3) + C_2(I_1 - 3)^2 + C_3(I_1 - 3)^3 + \kappa(J-1)^2 dV$$

where κ is an artificial bulk modulus, as above, while C_1, C_2, and C_3 are other artificial material properties. The values of C_1 and C_3 are by default 1 and 0, respectively, and can only be changed in the Equation View subnodes under a Free Deformation node. The value of C_2 controls the nonlinear stiffening of the artificial material under deformation. It is specified in the **Stiffening factor** field, with a default value of 100.

The Laplace smoothing is the cheapest option in terms of computations because it is linear and uses one equation for each coordinate direction, which are not coupled to each other. However, there is no mechanism in Laplace smoothing that prevents inversion of elements. Therefore, this method is most suitable for small deformations in a linear regime — for example, when computing the sensitivity of some quantity to virtual deformations around the initial shape.

The Winslow, hyperelastic, and Yeoh smoothing methods are increasingly nonlinear and create a single coupled system of equations for all coordinate directions, which makes them more expensive to solve. They also share the theoretical property that continuous solutions to these equations always have positive volume everywhere. Unfortunately, this is not necessarily true for the discrete finite element solutions. In addition, a positive volume is not sufficient for maintaining element quality.

In compression, the three nonlinear methods show similar behavior, while in extension, the Winslow smoothing tends to allow elements to be stretched too far. The main difference between the simpler Hyperelastic method and the more advanced Yeoh model is that the latter responds to element distortion by sharply increasing the stiffness of distorted elements. This to some extent prevents further distortion in those regions and effectively acts to spread the mesh deformation more evenly over the domain, away from moving boundaries.

Yeoh smoothing generally produces the best results and allows the largest displacement of boundaries before mesh elements become inverted. However, because of its strong nonlinearity, it can cause convergence problems, in particular for the time-dependent and segregated solvers.

Limitations of the ALE Method

The following limitations apply to the ALE method in general and therefore to the Moving Mesh and Deformed Geometry interfaces:

- The connectivity of the mesh remains unchanged during the mesh deformation, which means that topological changes in the geometry are not allowed.
- When the mesh deformation becomes large, the quality of the mesh created by the smoothing equations can deteriorate, and the solver might then run into convergence problems. Sometimes an **Inverted mesh element** warning displays in the **Progress** window for the solver, which means that a mesh element has (partially) warped inside-out. The solver might even stop with an error for inverted mesh elements. See Inverted Mesh Elements for more information. Sometimes, introducing extra boundaries with explicit deformation inside the domains can help. You can also generate a new mesh for the region covered by the deformed mesh and let the solver continue by deforming the new mesh; see the section Remeshing a Deformed Mesh. See also Tips for Modeling Using Deformed Meshes below.
- If you use a **Geometry shape order** larger than 1 in the Moving Mesh and Deformed Geometry interfaces, the mesh moving techniques often produce elements with distorted shapes. If there are warnings or errors about inverted mesh elements, consider reducing the geometry shape order to 1. This, however, makes the geometry representation polygonal, which might affect accuracy. The measure of mesh quality does not capture these distorted shapes because it is computed from the positions of the corners of the mesh element (ignoring midside nodes, for instance).

Tips for Modeling Using Deformed Meshes

When working with a deformed mesh to move things around, the computational mesh gets deformed. If the deformations become too large, some mesh elements might get inverted. This means that the accuracy of the solution deteriorates and eventually the solvers diverge due to an ill-conditioned system. Here are some tips on how to keep the mesh under control:

- Try a different mesh. It is often preferable to start from a reasonably uniform mesh. One way to achieve this is to first select a coarse mesh in the predefined mesh size settings and then set a small maximum element size. Also, quad meshes and mapped meshes tend to perform better than triangles.
- Try a different smoothing type. Winslow smoothing is slightly slower, more memory consuming, and usually, but not always, more stable than Laplace smoothing. Hyperelastic and Yeoh smoothing sometimes work better than the other methods (in some fluid-structure interaction problems, for example). See Smoothing Methods for more information.
- If solving a time-dependent problem, try to solve the equations more accurately by reducing the absolute and relative tolerances for the time-dependent solver.
- Help the mesh deformation by sliding the boundary elements along with the movement of the mesh. This can be achieved by adding a prescribed deformation on the boundary that moves the boundary elements according to the deformation of some point in the model. Define a coupling operator under the **Definitions** node and use it to couple the deformation from the point to the boundary mesh.
- Physics interfaces that control the coordinates of one of the frames exhibit an override behavior where a physics interface of this kind further down the list of physics interfaces in the model tree overrides the ones above, if they are active on the same domains. The Moving Mesh interface appears as not applicable where it is overridden, but physics interfaces with ALE functionality, such as the Solid Mechanics interface, only lose their control over the frame. You may need to rearrange the order of the physics interfaces in a model to avoid this behavior.

Remeshing a Deformed Mesh

When the mesh deformation has become so large that the quality of the mesh is too bad, generate a new mesh for the deformed configuration and then continue the solution process. To do so, follow these steps:

1. Add a stop condition.
2. View the deformed mesh.
3. Copy the solution.
4. Create a Deformed Configuration ( ).
5. Remesh the deformed configuration.
6. Continue solving with the new mesh.

	To make the Deformed Configuration mesh represent the deformed geometry, use a Moving Mesh (ALE) interface to model the mesh deformation or, for structural mechanics models, use the option in the study to include geometric nonlinearity (requires the Structural Mechanics Module, MEMS Module, or Acoustics Module). Also, some of the physics interfaces in the Corrosion Module and Electrodeposition Module include a deformed geometry.

	• Deformed Configuration • Solution (dataset)

The following sections contain details about these steps and additional information.

ADDING A STOP CONDITION

Add a stop condition in the solver to make it stop when the mesh quality becomes too bad. If the Time-Dependent Solver is used, do this by right-clicking, for example, **Study 1>Solver Configurations>Solution 1> Time Dependent Solver 1** and selecting **Stop Condition** ( ) from the context menu. If the parametric stationary solver is used, right-click, for example, **Stationary Solver 1>Parametric 1** under **Solution 1** and select **Stop Condition** ( ) from the context menu. In the table under **Stop Expressions**, enter a Boolean expression (to stop when the expression is true) or an expression that makes the solver stop when the expression becomes negative. For example, enter `comp1.ale.I1isoMax>4` to stop before the maximum element distortion exceeds 4. Notice that you must add the component where the **Moving Mesh (ale)** interface is defined, in this case `comp1` for Component 1, to access the variable from the Study branch (see Variable Naming Convention and Namespace).

The following predefined variables are useful for defining a stop condition and for monitoring the mesh deformation: the maximum element distortion, `ale.I1isoMax`; the minimum relative element volume, `ale.relVolMin`; and the minimum mesh quality, `ale.minqual`. See Predefined Variables below.

	In time-dependent simulations, you can use automatic remeshing instead of the stop condition. The software then creates new meshes when the mesh quality drops below the specified level. To do so, click the **Step 1: Time Dependent** node ( ) and then select the **Automatic remeshing** check box in the **Settings** window's **Study Extensions** section. To use the same condition as for the stop condition above, select **Distortion** under **Condition type**, enter `comp1.ale.I1isoMax` in the **Distortion expression** field, and enter 4 in the **Stop when distortion exceeds** field in the **Settings** window for the **Automatic Remeshing** ( ) node (under the **Time-Dependent Solver** node in the solver sequence).

VIEWING THE DEFORMED MESH

Use a Mesh plot in a 2D or 3D plot group to visualize the deformed mesh. The Mesh plot shows the element shapes, sizes, and quality corresponding to the frame selected in the underlying dataset. See Mesh (Plot) for details.

COPYING THE SOLUTION

To keep the first solution, right-click **Study 1>Solver Configurations>Solution 1** and select **Solution>Copy** ( ). The copied solution appears as a new solution; **Copy 2**, for example.

CREATING A DEFORMED CONFIGURATION

Create a deformed configuration by right-clicking, for example, **Results>Data Sets>Solution 2** and selecting **Remesh Deformed Configuration** ( ). The deformed configuration appears as a new **Deformed Configuration** node ( ) under **Meshes**. The deformed configuration works as a new geometry but with restricted functionality. The **Settings** window of the deformed configuration indicates which solution it was constructed from. Click the **Update** button to see the corresponding deformed configuration in the graphics.

REMESHING THE DEFORMED CONFIGURATION

Expanding a **Deformed Configuration** node ( ) shows that a new meshing sequence has been added beneath it. This meshing sequence contains a **Size** node ( ) and a **Reference** node ( ) only. The reference node refers to the original meshing sequence. This means that the new meshing sequence uses the same nodes as the original meshing sequence. Build the new meshing sequence by selecting **Build All** from its context menu or pressing F8. To make changes to the new meshing sequence before building it, right-click **Reference 1** and select **Expand** ( ). Then the nodes from the original meshing sequence are copied to the new meshing sequence. You can also add and remove nodes in the new meshing sequence. If several meshes are needed on the deformed configuration (for the multigrid solver, for example), you can add an additional meshing sequence by right-clicking **Deformed Configuration** ( ) and selecting **Mesh** ( ).

CONTINUE SOLVING WITH THE NEW MESH

1. In the **Settings** window for the study step (for example, **Study 1>Step1: Time Dependent**), use the **Mesh** list under **Mesh Selection** to select the new meshing sequence (**Mesh 2**, for example).
2. Change the **Times** list under **Study Settings** or the **Parameter value list** under **Study Extensions** to include only the time or parameter corresponding to the deformed configuration plus the remaining times or parameters.
3. Change the initial value to be the last time or parameter of the previous solution. Do this by expanding the **Values of Dependent Variables** section in the study step settings. Under **Initial values of variables solved For**, change **Settings** to **User controlled**; then change **Method** to **Solution**, and locate the previously created solution copy. Then select the appropriate time or parameter value in the **Time** or **Parameter value** list. Usually the **Automatic** setting, which selects the last time or parameter value, suffices. Change the settings under **Values of variables not solved for** similarly.
4. To solve for remaining times or parameters, right-click **Study 1** and select **Compute**.

REMESHING SEVERAL TIMES

You can remesh several times by iterating the above steps. For each of the solver runs, you get a copy of the solution (**Copy 2**, **Copy 3**, **Copy 4**, and so on) and a corresponding dataset (**Solution 2**, **Solution 3**, **Solution 4**, and so on). In the plot group, select one of these datasets for results analysis and visualization.

ALTERNATIVE PROCEDURE USING SEVERAL STUDIES

The above procedure uses a single study that is modified for each solver run. To recompute the whole sequence of runs, an alternative that uses one study for each run is better. To do that, add a new study after meshing each deformed configuration. The copy solution step is not needed in this case. If the settings are changed in the study or its solver sequence, make these changes also in the new study. For example, the stop condition has to be added.

Deformed Mesh Definition Features

You can add deformed mesh features directly to any COMSOL Multiphysics model. They are available from the **Moving Mesh** and **Deformed Geometry** submenus when right-clicking the **Definitions** node under a **Component**, as well as from the **Definitions** toolbar. The same feature types are available both for Moving Mesh and Deformed Geometry; they differ only in which frame's mesh they deform.

Moving Mesh Features

Features added under **Moving Mesh** control the spatial frame. They can be used to study both stationary states and time-dependent deformations where the geometry changes its shape due to motion of solid boundaries and deformation of solid domains. The same feature types are also available as Deformed Geometry Features under **Deformed Geometry** but there control the material frame. For a comparison of moving meshes and deformed geometries, see Deformed Geometry vs. Moving Mesh.

For example, a **Deforming Domain** feature can be used for fluid domain deformations in fluid-structure interaction (FSI) or electrostatic domain deformations (Electromechanics) in MEMS. The shape of the domain is then governed by the deformation or motion of its boundaries. Other features can specify that parts of the model rotate or otherwise deform in some way.

Technically, the **Moving Mesh** branch represents the spatial frame in the **Model Builder** tree. Its **Equation View** subnode displays all contributions to the spatial frame deformation, for example the mesh smoothing equations used by a Deforming Domain feature, or the boundary motion implicitly prescribed by a Solid Mechanics interface. Also, when enabling **Modify model configuration for study step** in a Study Step node, you can use the **Moving Mesh** branch to control the overall behavior of Moving Mesh features: whether they should control the spatial frame, and whether smoothing equations should be solved for.

- If you have the CFD Module, see *Laminar Flow in a Baffled Stirred Mixer*: Application Library path **CFD_Module/Fluid-Structure_Interaction/baffled_mixer**
- If you have the Structural Mechanics Module, see *Peristaltic Pump*: Application Library path **Structural_Mechanics_Module/Fluid-Structure_Interaction/peristaltic_pump**

The moving mesh features available under **Definitions** can be used to model moving meshes instead of adding a **Moving Mesh** interface. The Moving Mesh Interface is still available as an alternative to the moving mesh functionality described here.

DOMAIN AND BOUNDARY NODES FOR MOVING MESHES

The **Moving Mesh** menu that you find when right-clicking a **Definitions** node includes these domain and boundary nodes, which are identical to their Deformed Geometry counterparts:

- Prescribed Deformation
- Rotating Domain
- Deforming Domain
- Fixed Boundary
- Prescribed Mesh Displacement
- Prescribed Normal Mesh Displacement
- Prescribed Normal Mesh Velocity
- Rotating Boundary
- Mesh Slip
- Symmetry/Roller

Deformed Geometry Features

Features added under **Deformed Geometry** control the material frame. They can be used to study both stationary states and time-dependent deformations where the geometry changes its shape due to addition or removal of material, whether this happens due to a physical process, or for example as part of shape optimization. The same feature types are also available as Moving Mesh Features under **Moving Mesh** but there control the spatial frame. For a comparison of moving meshes and deformed geometries, see Deformed Geometry vs. Moving Mesh.

Features added under **Deformed Geometry** define a deformation of the material frame relative to the geometry frame, and therefore potentially apply to all physics in the model. They can be used to study how physics changes when the geometry, represented by the mesh, changes due to an externally imposed geometry change. In a dynamic simulation, deformed geometry features model a deformation that represents removal or addition of material. The same feature types are also available as Moving Mesh Features under **Moving Mesh** but there control the spatial frame. For a comparison of moving meshes and deformed geometries, see Deformed Geometry vs. Moving Mesh.

Technically, the **Deformed Geometry** branch represents the spatial frame in the **Model Builder** tree. Its **Equation View** subnode displays all contributions to the material frame deformation, for example the mesh smoothing equations used by a Deforming Domain feature, or the boundary motion prescribed by a Polynomial Boundary feature used in shape optimization. Also, when enabling **Modify model configuration for study step** in a Study Step node, you can use the **Deformed Geometry** branch to control the overall behavior of Deformed Geometry features: whether they should control the spatial frame, and whether smoothing equations should be solved for.

- If you have the Heat Transfer Module, see *Tin Melting Front*: Application Library path **Heat_Transfer_Module/Phase_Change/tin_melting_front**

The deformed geometry features available under **Definitions** can be used to model deformed geometries instead of adding a **Deformed Geometry** interface. The Deformed Geometry Interface is still available as an alternative to the deformed geometry functionality described here.

DOMAIN AND BOUNDARY NODES FOR DEFORMED GEOMETRIES

The **Deformed Geometry** menu that you find when right-clicking a **Definitions** node includes these domain and boundary nodes, which are identical to their Moving Mesh counterparts:

- Prescribed Deformation
- Rotating Domain
- Deforming Domain
- Fixed Boundary
- Prescribed Mesh Displacement
- Prescribed Normal Mesh Displacement
- Prescribed Normal Mesh Velocity
- Rotating Boundary
- Mesh Slip
- Symmetry/Roller

Prescribed Deformation

Use the **Prescribed Deformation** node ( ) to explicitly define the deformation of the mesh in one frame relative to another. Note that the Solid Mechanics interface has built-in behavior corresponding a Prescribed Deformation node under **Moving Mesh**.

PRESCRIBED DEFORMATION

Specify expressions that define the deformation in the **Prescribed deformation** fields (dx, dy, and dz for 3D models, for example) (SI unit: m). The default gives no mesh displacement.

Rotating Domain

Add a **Rotating Domain** node (to add rotation to the selected domains. You can specify the rotation type and the rotation axis.

The **Settings** window for the **Rotating Domain** node contains the following sections:

ROTATION

From the **Rotation type** list, choose a type of rotation for the domain.

- Choose **User defined** (the default) to add a user-defined expression for the rotation angle α in the **Rotation angle** field.
- Choose **Specified rotational velocity** to define a rotational velocity expression of one of the following **Rotational velocity expression** types:
  - Choose **Constant angular velocity** to specify an angular velocity ω in the **Angular velocity** field (SI unit: rad/s) using only numbers and model parameters. Specify an initial angle α_0 in the **Initial angle** field (SI unit: rad). This effectively sets the rotation angle to $\alpha=\alpha_0+\omega t$.
  - Choose **General angular velocity** to specify a general angular velocity ω using an expression in the **Angular velocity** field (SI unit: rad/s) with an initial angle α_0 specified in the **Initial angle** field (SI unit: rad). The rotation angle is computed by solving an ODE for α, which is therefore a state variable and part of the solution.
  - Choose **Constant revolutions per time** to specify a revolution frequency f in the **Revolutions per time** field (SI unit: 1/s) using only numbers and model parameters. Specify an initial angle α_0 in the **Initial angle** field (SI unit: rad). This effectively sets the rotation angle to $\alpha=\alpha_0+2\pi ft$.
  - Choose **General revolutions per time** to specify a general revolution frequency f using an expression in the **Revolutions per time** field (SI unit: 1/s) with an initial angle α_0 specified in the **Initial angle** field (SI unit: rad). The rotation angle is computed by solving an ODE for α, which is therefore a state variable and part of the solution.
- Choose **Rigid body** to specify that the rotating domain behaves as if attached to a rigid body with the following parameters:
  - Enter an **Applied moment** M (SI unit: N·m).
  - Enter a **Moment of inertia** I (SI unit: kg·m^2).
  - Enter an **Initial angle** α_0 (SI unit: rad).
  - Enter an **Initial angular velocity** ω_0 (SI unit: rad/s).

  The rotation angle is computed by solving an ODE for α, which is therefore a state variable and part of the solution.

AXIS

In this section, define the rotation axis by a base point and an axis:

Enter the base point $\mathbf{r}_{ax}$ components in the **Rotation axis base point** fields (SI unit: m).

Enter the rotation axis $\mathbf{u}_{rot}$ in the **Rotation axis** fields. In 2D, no rotation axis is specified; it is assumed to point out of the plane, toward the observer.

	If you specify a **General angular velocity** or **General revolutions per time**, the Rotating Domain feature uses an ODE to integrate the rotation angle in time. This can in some situations negatively affect solver behavior. Therefore, when the rotational velocity is constant, make sure to select **Constant angular velocity** or **Constant revolutions per time**.

	A Solid Mechanics interface cannot coexist with a **Rotating Domain** on the same selection. If you need to solve for solid mechanics in a rotating frame, do not add any **Rotating Domain**. Instead, add a Rotating Frame node in the Solid Mechanics interface. By selecting the **Define spatial frame rotation** check box in the **Rotating Frame** node you will define a rotation of the spatial frame in the domain. This rotation is also augmented by the deformations computed in the Solid Mechanics interface. This is, from the viewpoint of other physics interfaces, similar to using a **Rotating Domain** node, but with an additional deformation.

Deforming Domain

Add a **Deforming Domain** node ( ) to specify that the shape of the selected domains should be governed by the domain boundaries, which are in turn controlled either by explicit deformed mesh boundary condition nodes, or by implicit continuity constraints requiring that a deforming domain must follow the shape of adjacent domains, or stay fixed if there is no adjacent domain. Explicit boundary conditions take precedence over implicit constraints.

In the interior of the domains, the mesh is controlled by a smoothing equation. You can select the smoothing method and the initial deformation of the domain.

The **Settings** window for the **Deforming Domain** node contains the following sections:

SMOOTHING

For the mesh smoothing, choose smoothing type from the **Mesh smoothing type** list: **Laplace** (the default), **Winslow**, **Hyperelastic**, or **Yeoh**. For **Yeoh**, also enter a **Stiffening factor** C_2 (default: 10). See Smoothing Methods for more information.

INITIAL DEFORMATION

Enter expressions or values for the components of the initial deformation in the **Initial deformation** fields (SI unit: m).

Fixed Boundary

Use the **Fixed Boundary** node ( ) on boundaries of deforming domains to specify that the selected boundaries remain at their reference shape and do not move.

BOUNDARY SELECTION

Here you select the boundaries that should be fixed.

Prescribed Mesh Displacement

Use the **Prescribed Mesh Displacement** node ( ) on boundary of deforming domains to fully specify the displacement of the mesh relative to the reference mesh at the boundary.

PRESCRIBED MESH DISPLACEMENT

Enter a prescribed displacement for each coordinate direction (SI unit: m). The default settings provide a fixed boundary (zero displacements in all directions).

Prescribed Normal Mesh Displacement

Use the **Prescribed Normal Mesh Displacement** node ( ) to specify the displacement of the boundary in the reference normal direction. The node can be used on the boundaries of deforming domains. No constraints are set on the tangential displacement.

NORMAL MESH DISPLACEMENT

Enter a value or expression for the **Prescribed normal mesh displacement** d_n (SI unit: m).

	Prescribing a normal displacement on a boundary which is not flat can lead to unexpected results since the normal direction is computed at the initial — reference — position. For example, prescribing a constant normal displacement on a circular boundary allows a circle of any radius as solution.

Prescribed Normal Mesh Velocity

Use the **Prescribed Normal Mesh Velocity** node ( ) to specify the velocity of the boundary in the current normal direction. The node can be used on the boundaries of deforming domains. No constraints are set on the tangential velocity.

	The Prescribed Normal Mesh Velocity node should only be used in Time Dependent studies. The behavior for other studies is undefined.

NORMAL MESH VELOCITY

Enter a value or expression for the **Prescribed normal mesh velocity** v_n (SI unit: m/s).

Rotating Boundary

Use the **Rotating Boundary** node ( ) on boundaries of a **Deforming Domain** that is expected to be rotating. You can specify the rotation type and the rotation axis.

The **Settings** window for the **Rotating Boundary** node contains the following sections:

ROTATION

From the **Rotation type** list, choose a type of rotation for the domain.

- Choose **User defined** (the default) to add a user-defined expression for the rotation angle α in the **Rotation angle** field.
- Choose **Specified rotational velocity** to define a rotational velocity expression of one of the following **Rotation velocity expression** types:
  - Choose **Constant angular velocity** to specify an angular velocity ω in the **Angular velocity** field (SI unit: rad/s) using only numbers and model parameters. Specify an initial angle α_0 in the **Initial angle** field (SI unit: rad). This effectively sets the rotation angle to $\alpha=\alpha_0+\omega t$.
  - Choose **General angular velocity** to specify a general angular velocity ω using an expression in the **Angular velocity** field (SI unit: rad/s) with an initial angle α_0 specified in the **Initial angle** field (SI unit: rad). The rotation angle is computed by solving an ODE for α, which is therefore a state variable and part of the solution.
  - Choose **Constant revolutions per time** to specify a revolution frequency f in the **Revolutions per time** field (SI unit: 1/s) using only numbers and model parameters. Specify an initial angle α_0 in the **Initial angle** field (SI unit: rad). This effectively sets the rotation angle to $\alpha=\alpha_0+2\pi ft$.
  - Choose **General revolutions per time** to specify a general revolution frequency f using an expression in the **Revolutions per time** field (SI unit: 1/s) with an initial angle α_0 specified in the **Initial angle** field (SI unit: rad). The rotation angle is computed by solving an ODE for α, which is therefore a state variable and part of the solution.

- Choose **Rigid body** to specify that the rotating domain behaves as if attached to a rigid body with the following parameters:
  - Enter an **Applied moment** M (SI unit: N·m).
  - Enter a **Moment of inertia** I (SI unit: kg·m^2).
  - Enter an **Initial angle** α_0 (SI unit: rad).
  - Enter an **Initial angular velocity** ω_0 (SI unit: rad/s).

  The rotation angle is computed by solving an ODE for α, which is therefore a state variable and part of the solution.

AXIS

In this section, define the rotation axis by a base point and an axis:

Enter the base point $\mathbf{r}_{ax}$ components in the **Rotation axis base point** fields (SI unit: m).

Enter the rotation axis $\mathbf{u}_{rot}$ in the **Rotation axis** fields. In 2D, no rotation axis is specified; it is assumed to point out of the plane, toward the observer.

	If you specify a **General angular velocity** or **General revolutions per time**, the Rotating Domain feature uses an ODE to integrate the rotation angle in time. This can in some situations negatively affect solver behavior. Therefore, when the rotational velocity is constant, make sure to select **Constant angular velocity** or **Constant revolutions per time**.

Mesh Slip

Use the **Mesh Slip** node ( ) on boundaries of deforming domains where the mesh can slip (that is, only move in the current tangential direction). The condition is equivalent to specifying a zero normal mesh velocity in a Prescribed Normal Mesh Velocity node.

BOUNDARY SELECTION

Here you select the boundaries where the mesh should be able so slip.

Symmetry/Roller

Use a **Symmetry/Roller** node ( ) on flat boundaries of deforming domains which are also symmetry planes in the model, or where you otherwise want to prevent boundary nodes from moving out of the plane. This allows the mesh to move tangentially to the symmetry/roller plane, but not in its normal direction. The condition is equivalent to specifying a zero normal mesh displacement in a Prescribed Normal Mesh Displacement node.

BOUNDARY SELECTION

Here you select the boundaries where there is symmetry in the moving mesh.

The Moving Mesh Interface

The **Moving Mesh (ale)** interface ( ), found under the **Mathematics>Deformed Mesh** branch ( ) when adding a physics interface, can be used to create models where the geometry, here represented by the mesh, changes shape due to some physical phenomena without material being removed or added. The difference between the Deformed Geometry and Moving Mesh interfaces is that the former defines a deformation of the material frame relative to the geometry frame, while the latter defines a displacement of the spatial frame relative to the material frame. The Moving Mesh interface can be used to study both stationary states and time-dependent deformations where the geometry changes its shape due to the dynamics of the problem. For example, it can be used for fluid domain deformations in fluid-structure interaction (FSI) or electrostatic domain deformations in MEMS.

When this interface is added, these default nodes are also added to the **Model Builder**: **Fixed Mesh** and **Prescribed Mesh Displacement** (the default boundary condition). Then, from the **Physics** toolbar, add other nodes that implement, for example, boundary conditions. You can also right-click **Moving Mesh** to select features from the context menu.

Predefined Variables

The Moving Mesh interface includes the following predefined variables for the spatial frame, which can be of interest, for example, to monitor the quality of the mesh and define a stop criterion for remeshing (see Adding a Stop Condition):

- The local relative element volume, `spatial.relVol`, is a quantity that measures the local volumetric distortion of the elements. When this measure approaches zero in some part of the mesh, frame transformations become singular causing solvers to fail.
- The minimum relative element volume, `spatial.relVolMin`, must be > 0, otherwise the mesh elements are inverted. A suitable stop criterion using this variable is that the minimum relative element volume must be larger than a small positive number.
- The maximum relative element volume, `spatial.relVolMax`, is a positive scalar number that represents the maximum value of the relative element volume.
- The minimum mesh quality, `spatial.minqual`, must be > 0; an acceptable mesh quality is typically larger than 0.1 (where the quality measure is a number between 0 and 1).

	• If you have the AC/DC Module, see *Electrodynamics of a Power Switch*: Application Library path **ACDC_Module/Motors_and_Actuators/power_switch** • If you have the Heat Transfer Module, see *Viscous Heating in a Fluid Damper*: Application Library path **Heat_Transfer_Module/Buildings_and_Constructions/fluid_damper**

SETTINGS

The **Label** is the default physics interface name.

The **Name** is used primarily as a scope prefix for variables defined by the physics interface. Refer to such physics interface variables in expressions using the pattern `<name>.<variable_name>`. In order to distinguish between variables belonging to different physics interfaces, the `name` string must be unique. Only letters, numbers, and underscores (_) are permitted in the **Name** field. The first character must be a letter.

The default **Name** (for the first physics interface in the model) is `ale`.

DOMAIN SELECTION

	You do not need to use a Moving Mesh interface in domains where a Solid Mechanics interface is active. The displacements automatically control the spatial frame when **Include geometric nonlinearity** is selected in a study step.

FRAME SETTINGS

Specify the names of the spatial coordinates of the base frame for the physics interface — the material frame — in the **Material frame coordinates** fields. The defaults are the coordinates of the spatial frame in uppercase letters (**X**, **Y**, and **Z**). You can change the names in the fields for the **First**, **Second**, and **Third** coordinate. The field labels include the default spatial coordinate names in parentheses.

The **Geometry shape order** setting controls the order of polynomials — **1** (linear), **2** (quadratic; the default), **3** (cubic), **4** (quartic), or **5** (quintic, 2D only) — used for representing the geometry shape in the spatial frame. The same order is used for Lagrange shape functions defining the mesh position in domains where **Free displacement** has been activated.

FREE DEFORMATION SETTINGS

Select the smoothing type for freely deformed domains from the **Mesh smoothing type** list. Choose between **Lagrange**, **Winslow**, **Hyperelastic**, and **Yeoh** smoothing. The default is Laplace smoothing. For Yeoh smoothing, also specify a **Stiffening factor** (default: 100).

	• Domain and Boundary Nodes in the Moving Mesh Interface • Smoothing Methods • Common Physics Interface and Feature Settings and Nodes

Domain and Boundary Nodes in the Moving Mesh Interface

The Moving Mesh Interface includes these domain and boundary nodes:

- Fixed Mesh
- Free Deformation
- Prescribed Deformation
- Prescribed Mesh Displacement
- Prescribed Mesh Velocity
- Prescribed Normal Mesh Velocity
- Zero Normal Mesh Velocity
- Zero Normal Mesh Displacement

Fixed Mesh

Use the **Fixed Mesh** node to specify that the selected domains remain at their reference material shape and do not move. This is the default.

Prescribed Mesh Displacement

Use the **Prescribed Mesh Displacement** node on the boundary of domains with free deformation. The spatial frame in the adjacent domain moves in accordance with the displacement.

COORDINATE SYSTEM SELECTION

Select a coordinate system for the mesh displacement from the **Coordinate system** list. The default is the **Global coordinate system**.

PRESCRIBED MESH DISPLACEMENT

Select the check box for each coordinate direction to prescribe the displacement. The default settings provide a fixed boundary (zero displacements in all directions).

For boundaries adjacent to domains where displacement variables are defined, for example domains where a Solid Mechanics interface is active, let these variables drive the mesh displacement by typing the component field names in the corresponding fields (for example, setting **dx** to `u`, **dy** to `v`, and **dz** to `w` in 3D).

CONSTRAINT SETTINGS

To display this section, click the **Show More Options** button ( ) and select **Advanced Physics Options** in the **Show More Options** dialog box. See Common Physics Interface and Feature Settings and Nodes for links to more information.

Free Deformation

The **Free Deformation** node constrains the mesh displacement only by the boundary conditions on the surrounding boundaries. The displacement in the domain is obtained by solving a PDE.

INITIAL DEFORMATION

Give initial values for mesh displacements, relative to the material frame, in the **Initial mesh displacement** fields.

Prescribed Deformation

Use the **Prescribed Deformation** node to define the deformation explicitly using expressions, or if you want the spatial coordinates to follow a deformation computed by, for example, a Solid Mechanics interface. (You can also achieve the latter effect by excluding the domains where the Solid Mechanics interface is defined from the domains where the Moving Mesh interface is active.)

PRESCRIBED MESH DISPLACEMENT

Specify expressions that define the deformation in the **Prescribed mesh displacement** fields (*dx*, *dy*, and *dz* for 3D models, for example) (SI unit: m). The default gives no mesh displacement.

Prescribed Mesh Velocity

Use the **Prescribed Mesh Velocity** node on the boundary of domains with free displacement to specify the velocity of the boundary. The spatial frame in the adjacent domains moves in accordance with the velocity.

PRESCRIBED MESH VELOCITY

Select the check box for each coordinate directory to prescribe a velocity. The default settings provide zero velocities in all directions.

CONSTRAINT SETTINGS

To display this section, click the **Show More Options** button ( ) and select **Advanced Physics Options** in the **Show More Options** dialog box. See Common Physics Interface and Feature Settings and Nodes for links to more information.

Prescribed Normal Mesh Velocity

Use the **Prescribed Normal Mesh Velocity** node to specify the normal velocity of the boundary. The node can be used on the boundary of domains with free displacement. No constraints are set on the tangential velocity.

Simulations using moving meshes, with a boundary moving in the normal direction, can sometimes need a stabilizing term to suppress the formation of local boundary segments of high curvature. This can be of particular importance in an automatic remeshing sequence, where the remeshing step might amplify local curvature artifacts.

The Moving Boundary Smoothing option smooths the normal mesh velocity of the Prescribed Normal Mesh Velocity node according to the following equation:

$$\frac{\partial \mathbf{X}}{\partial t} \cdot \mathbf{n} = v_0 + v_{\mathrm{mbs}}$$

where v_0 is the desired normal mesh velocity, and v_{mbs} is a smoothing velocity according to:

$$v_{\mathrm{mbs}} = \delta_{\mathrm{mbs}} |v_0| h H$$

Here δ_{mbs} is a moving boundary smoothing tuning parameter (unitless), h is the mesh element size (SI unit: m), and H the mean surface curvature (SI unit: 1/m), defined as:

$$H = -\frac{1}{2} \nabla_T \cdot \mathbf{n}$$

where ∇_T is the surface gradient operator.

NORMAL MESH VELOCITY

Enter a value or expression for the **Normal mesh velocity** v_{n} (SI unit: m/s).

MOVING BOUNDARY SMOOTHING

By default, the **Enable moving boundary smoothing** check box is not selected. To enable boundary smoothing, click to select the check box, and then enter a value or expression for the **Moving boundary smoothing tuning parameter**, δ_{mbs} (unitless). The default value is 0.5.

As the local mesh element size h at a boundary is included in the expression for v_{mbs}, a large value for δ_{mbs} can result in an uneven velocity of mesh movement along a boundary. For this reason, it is recommended to use the smallest δ_{mbs} needed to achieve a stable solution.

Zero Normal Mesh Velocity

Use the **Zero Normal Mesh Velocity** node to set the normal velocity of the boundary to zero. The node can be used on the boundary of domains with free displacement. No constraints are set on the tangential velocity.

Zero Normal Mesh Displacement

Use the **Zero Normal Mesh Displacement** node to set the displacement in the normal direction of the boundary to zero. The node can be used on the boundary of domains with free displacement. No constraints are set explicitly in the tangential direction. Note however that for curved boundaries, a zero normal mesh displacement implicitly results in a zero displacement also in the tangential direction. Only for flat parts of the undeformed mesh is the boundary free to move in the tangential direction.

The Deformed Geometry Interface

The **Deformed Geometry (dg)** interface ( ), found under the **Mathematics>Deformed Mesh** branch ( ) when adding a physics interface, can be used to study how physics changes when the geometry, here represented by the mesh, changes due to an externally imposed geometry change. The difference between the Deformed Geometry and Moving Mesh interfaces is that the former defines a deformation of the material frame relative to the geometry frame, while the latter defines a displacement of the spatial frame relative to the material frame. The Deformed Geometry interface can be used in cases where the original geometry model shrinks or grows by removal or addition of material. For example, it can be used for shape optimization (geometry shrinks and grows at different places simultaneously), corrosion (geometry shrinks), or electrodeposition (geometry grows).

SETTINGS

The **Label** is the default physics interface name.

The **Name** is used primarily as a scope prefix for variables defined by the physics interface. Refer to such physics interface variables in expressions using the pattern `<name>.<variable_name>`. In order to distinguish between variables belonging to different physics interfaces, the `name` string must be unique. Only letters, numbers, and underscores (_) are permitted in the **Name** field. The first character must be a letter.

The default **Name** (for the first physics interface in the model) is `dg`.

DOMAIN SELECTION

!	The Deformed Geometry interface requires a domain selection which covers all domains in which some physics is active.

FRAME SETTINGS

The **Geometry shape order** setting controls the order of polynomials used for representing the geometry shape in the material frame. The same order is used for Lagrange shape functions defining the mesh position in domains where **Free displacement** has been activated.

FREE DEFORMATION SETTINGS

Select the smoothing type for freely deformed domains. Choose between Lagrange, Winslow, and hyperelastic smoothing.

	For detailed information about selecting geometric entities (domains, boundaries, edges, and points), see Working with Geometric Entities For more information about deformed meshes, see The Moving Mesh Interface.

	• Domain and Boundary Nodes for Deformed Geometry • Smoothing Methods • Common Physics Interface and Feature Settings and Nodes

	Electrochemical Polishing: Application Library path **COMSOL_Multiphysics/Electromagnetics/electrochemical_polishing**

Domain and Boundary Nodes for Deformed Geometry

The Deformed Geometry Interface includes these domain and boundary nodes:

- Free Deformation
- Prescribed Deformation
- Fixed Mesh
- Prescribed Mesh Displacement
- Prescribed Mesh Velocity
- Prescribed Normal Mesh Velocity
- Zero Normal Mesh Velocity
- Zero Normal Mesh Displacement

Fixed Mesh

Use the **Fixed Mesh** node to specify that the selected domains retain their original shape as defined by the geometry and original mesh. This is the default.

Prescribed Mesh Displacement

Add the **Prescribed Mesh Displacement** node on the boundaries of domains with free deformation. The material frame in the adjacent domain moves in accordance with the displacement.

PRESCRIBED MESH DISPLACEMENT

Select the check box for each coordinate direction where you want to prescribe the displacement. The default settings provide a fixed boundary (zero displacements in all directions).

CONSTRAINT SETTINGS

To display this section, click the **Show More Options** button ( ) and select **Advanced Physics Options** in the **Show More Options** dialog box. See Common Physics Interface and Feature Settings and Nodes for links to more information.

Free Deformation

The **Free Deformation** node constrains the mesh displacement only by the boundary conditions on the surrounding boundaries. The material frame displacement in the domain is obtained by solving a PDE.

	Smoothing Methods

INITIAL DEFORMATION

Give initial values for mesh displacements, relative to the material frame, in the **Initial mesh displacement** fields.

Prescribed Deformation

Use the **Prescribed Deformation** node to define the deformation of the material frame explicitly using expressions.

PRESCRIBED MESH DISPLACEMENT

Specify expressions that define the deformation in the **Prescribed mesh displacement** fields. Select the check box to enable the prescribed mesh displacement in the directions to use such a displacement condition. Use one expression per spatial coordinate.

Prescribed Mesh Velocity

Use the **Prescribed Mesh Velocity** node on the boundary of domains with free displacement. The material frame in the adjacent domains moves in accordance with the velocity.

PRESCRIBED VELOCITY

Select the check box for each coordinate directory to prescribe a velocity. The default settings provide zero velocities in all directions.

CONSTRAINT SETTINGS

To display this section, click the **Show More Options** button ( ) and select **Advanced Physics Options** in the **Show More Options** dialog box. See Common Physics Interface and Feature Settings and Nodes for links to more information.

Prescribed Normal Mesh Velocity

Use the **Prescribed Normal Mesh Velocity** node to specify the normal velocity of the boundary. The node can be used on the boundary of domains with free displacement. No constraints are set on the tangential velocity.

Simulations using moving meshes, with a boundary moving in the normal direction, can sometimes need a stabilizing term to suppress the formation of local boundary segments of high curvature. This can be of particular importance in an automatic remeshing sequence, where the remeshing step might amplify local curvature artifacts.

The moving boundary smoothing option smooths the normal mesh velocity of the **Prescribed Normal Mesh Velocity** node according to the following equation:

$$\frac{\partial \mathbf{X}}{\partial t} \cdot \mathbf{n} = v_0 + v_{\mathrm{mbs}}$$

where v_0 is the desired normal mesh velocity, and v_{mbs} is a smoothing velocity according to:

$$v_{\mathrm{mbs}} = \delta_{\mathrm{mbs}} |v_0| h H$$

Here δ_{mbs} is a moving boundary smoothing tuning parameter (unitless), h is the mesh element size (SI unit: m), and H is the mean surface curvature (SI unit: 1/m), defined as:

$$H = -\frac{1}{2} \nabla_T \cdot \mathbf{n}$$

where ∇_T is the surface gradient operator.

NORMAL MESH VELOCITY

Enter a value or expression for the **Normal mesh velocity** v_{n} (SI unit: m/s).

MOVING BOUNDARY SMOOTHING

By default, the **Enable moving boundary smoothing** check box is not selected. To enable boundary smoothing, click to select the check box, and then enter a value or expression for the **Moving boundary smoothing tuning parameter**, δ_{mbs} (unitless). The default value is 0.5.

Zero Normal Mesh Velocity

Use the **Zero Normal Mesh Velocity** node to set the normal velocity of the boundary to zero. The node can be used on the boundary of domains with free displacement. No constraints are set on the tangential velocity.

Zero Normal Mesh Displacement

Use the **Zero Normal Mesh Displacement** node to set the displacement in the normal direction of the boundary to zero. The node can be used on the boundary of domains with free displacement. No constraints are set explicitly in the tangential direction. Note, however, that for curved boundaries, a zero normal mesh displacement implicitly results in a zero displacement also in the tangential direction. Only for flat parts of the undeformed geometry is the boundary free to move in the tangential direction.

19

Elements and Shape Functions

This chapter contains reference information about the shape functions (elements) available in COMSOL Multiphysics and some background to the computational methods associated with those elements. See also Elements and Shape Function Programming in the *COMSOL Multiphysics Programming Reference Manual* for information about using the API for the available elements.

Shape Functions and Element Types

This section provides an overview of the finite elements and shape functions that COMSOL Multiphysics uses.

	The Structural Mechanics Module contains specialized elements for modeling of beams, trusses, plates, and shells.

Finite Elements

Once you have a mesh, you can introduce approximations to the dependent variables. For this discussion, concentrate on the case of a single dependent variable, u. The idea is to approximate u with a function that you can describe with a finite number of parameters, the so-called *degrees of freedom* (DOF). Inserting this approximation into the weak form of the equation generates a system of equations for the degrees of freedom.

Start with a simple example: linear elements in 1D. Assume that a mesh consists of just two mesh intervals: $0 < x < 1$ and $1 < x < 2$. Linear elements means that on each mesh interval the continuous function u is linear (affine). Thus, the only thing you need to know in order to characterize u uniquely is its values at the *node points* $x_1 = 0$, $x_2 = 1$, and $x_3 = 2$. Denote these as $U_1 = u(0)$, $U_2 = u(1)$, $U_3 = u(2)$. These are the *degrees of freedom*.

Now you can write

$$u(x) = U_1\varphi_1(x) + U_2\varphi_2(x) + U_3\varphi_3(x)$$

where $\varphi_i(x)$ are certain piecewise linear functions. Namely, $\varphi_i(x)$ is the function that is linear on each mesh interval, equals 1 at the ith node point, and equals 0 at the other node points. For example,

$$\varphi_1(x) = \begin{cases} 1 - x & \text{if } 0 \le x \le 1 \\ 0 & \text{if } 1 \le x \le 2 \end{cases}$$

The $\varphi_i(x)$ are called the *basis functions*. The set of functions $u(x)$ is a linear function space called the *finite element space*.

For better accuracy, consider another finite element space corresponding to quadratic elements. Functions u in this space are second-order polynomials on each mesh interval. To characterize such a function, introduce new node points at the midpoint of each mesh interval: $x_4 = 0.5$ and $x_5 = 1.5$. You must also introduce the corresponding degrees of freedom $U_i = u(x_i)$. Then, on each mesh interval, the second-degree polynomial $u(x)$ is determined by the degrees of freedom at the endpoints and the midpoint. In fact, you get

$$u(x) = U_1\varphi_1(x) + U_2\varphi_2(x) + U_3\varphi_3(x) + U_4\varphi_4(x) + U_5\varphi_5(x)$$

where the basis functions $\varphi_i(x)$ now have a different meaning. Specifically, $\varphi_i(x)$ is the function that is quadratic on each mesh interval, equals 1 at the ith node point, and equals 0 at the other node points. For example,

$$\varphi_1(x) = \begin{cases} (1-x)(1-2x) & \text{if } 0 \le x \le 1 \\ 0 & \text{if } 1 \le x \le 2 \end{cases}$$

In general, you specify a finite element space by giving a set of basis functions. The description of the basis functions is simplified by the introduction of *local (barycentric) coordinates* (or *element coordinates*) ξ_i. Consider a mesh element of dimension d in an n-dimensional geometry (whose spatial coordinates are denoted $x_1, \ldots, x_n$). Consider also the *standard d-dimensional simplex*

$$\xi_1 \geq 0, \xi_2 \geq 0, \ldots, \xi_d \geq 0, \xi_1 + \ldots + \xi_d \leq 1$$

which resides in the local coordinate space parameterized by the local coordinates $\xi_1, \ldots, \xi_d$. If $d = 1$, then this simplex is the unit interval. If $d = 2$, it is a triangle with two 45 degree angles, and if $d = 3$ it is a tetrahedron. Now you can consider the mesh element as a linear transformation of the standard simplex. Namely, by letting the global spatial coordinates x_i be suitable linear (affine) functions of the local coordinates, you get the mesh element as the image of the standard simplex.

When described in terms of local coordinates, the basis functions assume one of a few basic shapes. These are the *shape functions*. In the example with linear elements in 1D, any basis function on any mesh element is one of the following:

$$\phi = \xi_1, \qquad \phi = 1 - \xi_1, \qquad \phi = 0$$

Thus the first two are the shape functions in this example (0 is not counted as a shape function). In the example with quadratic elements in 1D, the shape functions are

$$\phi = (1 - \xi_1)(1 - 2\xi_1), \qquad \phi = 4\xi_1(1 - \xi_1), \qquad \phi = \xi_1(2\xi_1 - 1)$$

CURVED MESH ELEMENTS

When using higher-order elements (that is, elements of an order > 1), the solution has a smaller error. The error also depends on how well the mesh approximates the true boundary. To keep errors in the finite element approximation and the boundary approximation at the same level, it is wise to use *curved mesh elements*. They are distorted mesh elements that can approximate a boundary better than ordinary straight elements (if the model's boundary is curved). You can get curved mesh elements by writing the global coordinates x_i as polynomials of order k (the *geometry shape order*) in the local coordinates ξ_j (the earlier example took $k = 1$). Then the mesh element is the image of the standard simplex. For mesh elements that are not near a boundary, there is no reason to make them curved, so they are straight. It is customary to use the same order k here as for the order of the (Lagrange) element. This is referred to as using *isoparametric elements*.

The order k is determined by the geometry shape order for the frame (coordinate system) associated with the finite element. The frame is determined by the property `frame` to the finite element (the default is the reference frame). For certain finite elements, the geometry shape order given by the frame can be overridden by the property `sorder`. In the COMSOL Desktop, the default setting is to use an automatic geometry shape order, which means that the geometry shape order is equal to the highest order of any shape function used in the model.

If a curved mesh element becomes too distorted, it can become inverted and cause problems in the solution. The software can then reduce the geometry shape order automatically to avoid inverted elements.

- Shape Function Variables
- Avoiding Inverted Mesh Elements

LOCAL COORDINATES FOR DIFFERENT ELEMENT TYPES

The mesh element types available in COMSOL have the following representations in local coordinates $\xi_1, \ldots, \xi_d$:

MESH ELEMENT TYPE	LOCAL COORDINATES
Edge	$0 \leq \xi_1 \leq 1$
Triangle	$\xi_1 \geq 0, \xi_2 \geq 0, \xi_1 + \xi_2 \leq 1$
Quadrilateral	$0 \leq \xi_1 \leq 1, 0 \leq \xi_2 \leq 1$

MESH ELEMENT TYPE	LOCAL COORDINATES
Tetrahedron	$\xi_1 \geq 0, \xi_2 \geq 0, \xi_3 \geq 0, \xi_1 + \xi_2 + \xi_3 \leq 1$
Hexahedron	$0 \leq \xi_1 \leq 1, 0 \leq \xi_2 \leq 1, 0 \leq \xi_3 \leq 1$
Prism	$\xi_1 \geq 0, \xi_2 \geq 0, \xi_1 + \xi_2 \leq 1, 0 \leq \xi_3 \leq 1$
Pyramid	$0 \leq \xi_1 \leq 1 - \xi_3, 0 \leq \xi_2 \leq 1 - \xi_3, 0 \leq \xi_3 \leq 1$

Shape Function Types (Element Types)

This section contains information about the available shape function types (element types). See also Elements and Shape Function Programming in the *COMSOL Multiphysics Programming Reference Manual*.

THE LAGRANGE ELEMENT

The preceding examples are special cases of the *Lagrange element*. Consider a positive integer k, the *order* of the Lagrange element. For simplex mesh elements, the functions u in this finite element space are piecewise polynomials of degree k; that is, on each mesh element u is a polynomial of degree k. Also, in the following table, l, m, and n are nonnegative integers. In general, for a mesh element of type T, u belongs to the Lagrange shape function space $\mathrm{Lag}_k(T)$, which is spanned by the following monomials (or rational functions, in the case of pyramid elements):

MESH ELEMENT TYPE	BASIS FOR LAGRANGE SHAPE FUNCTION SPACE
Edge	$\xi_1^l, \quad l \leq k$
Triangle	$\xi_1^l \xi_2^m, \quad l + m \leq k$
Quadrilateral	$\xi_1^l \xi_2^m, \quad \max(l, m) \leq k$
Tetrahedron	$\xi_1^l \xi_2^m \xi_3^n, \quad l + m + n \leq k$
Hexahedron	$\xi_1^l \xi_2^m \xi_3^n, \quad \max(l, m, n) \leq k$
Prism	$\xi_1^l \xi_2^m \xi_3^n, \quad \max(l + m, n) \leq k$
Pyramid	$\left(\frac{\xi_1}{1 - \xi_3}\right)^l \left(\frac{\xi_2}{1 - \xi_3}\right)^m (1 - \xi_3)^{k - n}, \quad \max(l, m) + n \leq k$

To describe such a function it suffices to give its values in the *Lagrange points* of order k. These are the points whose local (element) coordinates are integer multiples of $1/k$. For example, for a triangular mesh in 2D with $k = 2$, this means that you have node points at the corners and side midpoints of all mesh triangles. For each of these node points p_i, there exists a degree of freedom $U_i = u(p_i)$ and a basis function φ_i. The restriction of the basis function φ_i to a mesh element is a function in $\mathrm{Lag}_k(T)$ such that $\varphi_i = 1$ at node i, and $\varphi_i = 0$ at all other nodes. The basis functions are continuous and you have

$$u = \sum_i U_i \varphi_i$$

The Lagrange element of order 1 is called the linear element. The Lagrange element of order 2 is called the quadratic element.

The Lagrange elements are available with all types of mesh elements, and it is the most common element type in the physics interfaces. The order k can be arbitrary, but the available numerical integration formulas usually limits its usefulness to $k \leq 5$($k \leq 4$ for tetrahedral meshes).

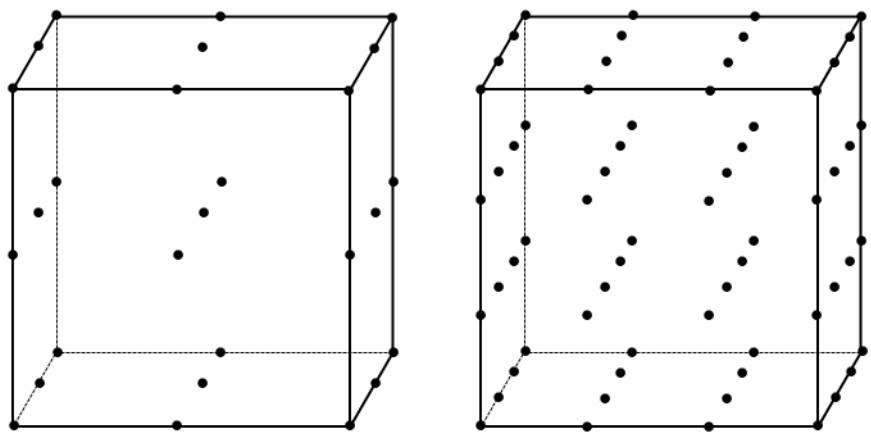

Figure 19-1: Examples of Lagrange elements: Second-order (27-node) hexahedral element (left) and third-order (64-node) hexahedral element (right).

Examples

For convenience, these examples provide explicit formulas for Lagrange shape functions for the most common element types and lowest orders.

Edge mesh elements For order $k = 1$, the Lagrange shape space has dimension 2 and has the following basis:

NODE POINT P	SHAPE FUNCTION
0	$1 - \xi_1$
1	ξ_1

For order $k = 2$ the Lagrange shape space has dimension 3 and has the following basis:

NODE POINT P	SHAPE FUNCTION
0	$(1 - \xi_1)(1 - 2\xi_1)$
1/2	$4\xi_1(1 - \xi_1)$
1	$\xi_1(2\xi_1 - 1)$

Triangular mesh elements For order $k = 1$, the Lagrange shape space has dimension 3 and has the following basis:

NODE POINT P	SHAPE FUNCTION
(0,0)	$1 - \xi_1 - \xi_2$
(1,0)	ξ_1
(0,1)	ξ_2

For order $k = 2$, the Lagrange shape space has dimension 6 and has the following basis:

NODE POINT P	SHAPE FUNCTION
(0,0)	$(1-\xi_1-\xi_2)(1-2\xi_1-2\xi_2)$
(1/2,0)	$4\xi_1(1-\xi_1-\xi_2)$
(1,0)	$\xi_1(2\xi_1-1)$
(0,1/2)	$4\xi_2(1-\xi_1-\xi_2)$
(1/2,1/2)	$4\xi_1\xi_2$
(0,1)	$\xi_2(2\xi_2-1)$

Quadrilateral mesh elements For order $k = 1$, the Lagrange shape space has dimension 4 and has the following basis:

NODE POINT P	SHAPE FUNCTION
(0,0)	$(1-\xi_1)(1-\xi_2)$
(1,0)	$\xi_1(1-\xi_2)$
(0,1)	$(1-\xi_1)\xi_2$
(1,1)	$\xi_1\xi_2$

For order $k = 2$, the Lagrange shape space has dimension 9 and has the following basis:

NODE POINT P	SHAPE FUNCTION
(0,0)	$(1-\xi_1)(1-2\xi_1)(1-\xi_2)(1-2\xi_2)$
(1/2,0)	$4\xi_1(1-\xi_1)(1-\xi_2)(1-2\xi_2)$
(1,0)	$\xi_1(2\xi_1-1)(1-\xi_2)(1-2\xi_2)$
(0,1/2)	$4(1-\xi_1)(1-2\xi_1)\xi_2(1-\xi_2)$
(1/2,1/2)	$16\xi_1(1-\xi_1)\xi_2(1-\xi_2)$
(1,1/2))	$4\xi_1(2\xi_1-1)\xi_2(1-\xi_2)$
(0,1)	$(1-\xi_1)(1-2\xi_1)\xi_2(2\xi_2-1)$
(1/2,1)	$4\xi_1(1-\xi_1)\xi_2(2\xi_2-1)$
(1,1)	$\xi_1(2\xi_1-1)\xi_2(2\xi_2-1)$

Tetrahedral mesh elements For order $k = 1$, the Lagrange shape space has dimension 4 and has the following basis:

NODE POINT P	SHAPE FUNCTION
(0,0,0)	$1-\xi_1-\xi_2-\xi_3$
(1,0,0)	ξ_1

NODE POINT P	SHAPE FUNCTION
(0,1,0)	ξ_2
(0,0,1)	ξ_3

For order $k = 2$, the Lagrange shape space has dimension 10 and has the following basis:

NODE POINT P	SHAPE FUNCTION
(0,0,0)	$(1-\xi_1-\xi_2-\xi_3)(1-2\xi_1-2\xi_2-2\xi_3)$
(1/2,0,0)	$4\xi_1(1-\xi_1-\xi_2-\xi_3)$
(1,0,0)	$\xi_1(2\xi_1-1)$
(0,1/2,0)	$4\xi_2(1-\xi_1-\xi_2-\xi_3)$
(1/2,1/2,0)	$4\xi_1\xi_2$
(0,1,0)	$\xi_2(2\xi_2-1)$
(0,0,1/2)	$4\xi_3(1-\xi_1-\xi_2-\xi_3)$
(1/2,0,1/2)	$4\xi_1\xi_3$
(0,1/2,1/2)	$4\xi_2\xi_3$
(0,0,1)	$\xi_3(2\xi_3-1)$

Hexahedral mesh elements For order $k = 1$, the Lagrange shape space has dimension 8 and has the following basis:

NODE POINT P	SHAPE FUNCTION
(0,0,0)	$(1-\xi_1)(1-\xi_2)(1-\xi_3)$
(1,0,0)	$\xi_1(1-\xi_2)(1-\xi_3)$
(0,1,0)	$(1-\xi_1)\xi_2(1-\xi_3)$
(1,1,0)	$\xi_1\xi_2(1-\xi_3)$
(0,0,1)	$(1-\xi_1)(1-\xi_2)\xi_3$
(1,0,1)	$\xi_1(1-\xi_2)\xi_3$
(0,1,1)	$(1-\xi_1)\xi_2\xi_3$
(1,1,1)	$\xi_1\xi_2\xi_3$

The Lagrange element defines the following variables. Denote `basename` with u, and let x and y denote (not necessarily distinct) spatial coordinates. The variables are (sdim = space dimension and edim = mesh element dimension):

- u
- ux, meaning the derivative of u with respect to x, defined on edim = sdim
- uxy, meaning a second derivative, defined on edim = sdim
- uTx, the tangential derivative variable, meaning the x-component of the tangential projection of the gradient, defined on edim < sdim
- $uTxy$, meaning xy-component of the tangential projection of the second derivative, defined when edim < sdim

When calculating the derivatives, the global spatial coordinates are expressed as polynomials of degree (at most) `sorder` in the local coordinates.

> The use of isoparametric elements means that u is not a polynomial in the global coordinates (if $k > 1$), only in the local coordinates.

THE NODAL SERENDIPITY ELEMENT

On each mesh element, the functions in the nodal serendipity finite element space is a subset of those of the Lagrange element. For simplex mesh elements, the functions u in this finite element space are piecewise polynomials of degree k, where $k = 2$, 3, or 4; that is, on each mesh element u is a polynomial of degree k. In the following table, l, m, and n are nonnegative integers. Also, define a function $\mathrm{sl}(i)$ (for the superlinear order) such that $\mathrm{sl}(i)$ is equal to i, if $i > 1$; else $\mathrm{sl}(i) = 0$. In general, for a mesh element of type T, u belongs to the nodal serendipity shape function space $\mathrm{Ser}_k(T)$, which is spanned by the following monomials (or rational functions, in the case of pyramid elements):

MESH ELEMENT TYPE	BASIS FOR NODAL SERENDIPITY SHAPE FUNCTION SPACE
Edge	$\xi_1^l, \quad l \le k$
Triangle	$\xi_1^l \xi_2^m, \quad l + m \le k$
Quadrilateral	$\xi_1^l \xi_2^m, \quad \mathrm{sl}(l) + \mathrm{sl}(m) \le k$
Tetrahedron	$\xi_1^l \xi_2^m \xi_3^n, \quad l + m + n \le k$
Hexahedron	$\xi_1^l \xi_2^m \xi_3^n, \quad \mathrm{sl}(l) + \mathrm{sl}(m) + \mathrm{sl}(n) \le k$
Prism	$\xi_1^l \xi_2^m \xi_3^n, \quad \mathrm{sl}(l + m) + \mathrm{sl}(n) \le k$
Pyramid	$\left(\frac{\xi_1}{1 - \xi_3}\right)^l \left(\frac{\xi_2}{1 - \xi_3}\right)^m (1 - \xi_3)^{k - n}, \quad \max(l, m, \mathrm{sl}(l) + \mathrm{sl}(m)) + n \le k$

To describe such a function it suffices to give its values in the *serendipity points* of order k, where k is 2, 3, or 4. These points are a subset of the Lagrange points (see The Lagrange Element). For each of these node points p_i, there exists a degree of freedom $U_i = u(p_i)$ and a basis function φ_i. The restriction of the basis function φ_i to a mesh element is a function in $\mathrm{Lag}_k(T)$ such that $\varphi_i = 1$ at node i, and $\varphi_i = 0$ at all other nodes. The basis functions are continuous and you have

$$u = \sum_i U_i \varphi_i$$

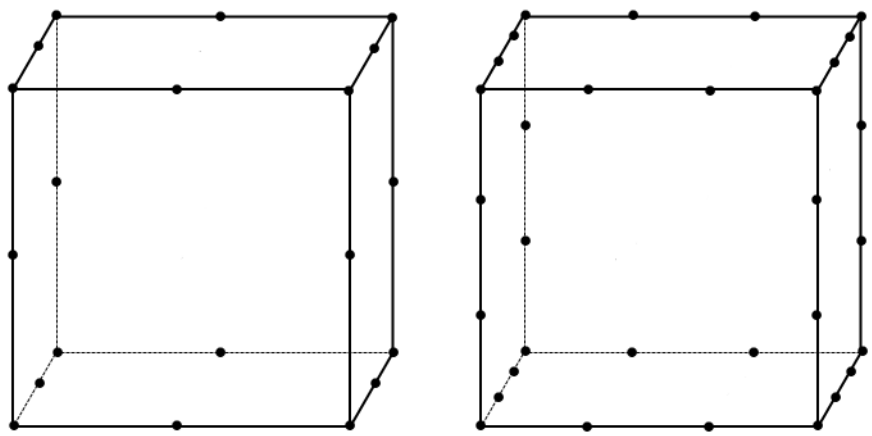

Figure 19-2: Examples of serendipity elements: Second-order (20-node) hexahedral element (left) and third-order (32-node) hexahedral element (right).

The nodal serendipity element defines the following field variables. Denote `basename` with u, and let x and y denote (not necessarily distinct) spatial coordinates. The variables are (sdim = space dimension and edim = mesh element dimension):

- u
- ux, meaning the derivative of u with respect to x, defined when edim = sdim or edim=0
- uxy, meaning a second derivative, defined when edim = sdim
- uTx, the tangential derivative variable, meaning the x-component of the tangential projection of the gradient, defined when 0 < edim < sdim
- $uTxy$, meaning xy-component of the tangential projection of the second derivative, defined when edim < sdim

When calculating the derivatives, the global spatial coordinates are expressed as polynomials of degree (at most) `sorder` in the local coordinates.

THE ARGYRIS ELEMENT

For a function represented with Lagrange elements, the first derivatives between mesh elements can be discontinuous. In certain equations (for example, the biharmonic equation) this can be a problem. The *Argyris element* has basis functions with continuous derivatives between mesh triangles (it is defined in 2D only). The second-order derivative is continuous in the triangle corners. On each triangle, a function u in the Argyris finite element space is a polynomial of degree 5 in the local coordinates.

The Argyris element is available with triangular meshes only.

When setting Dirichlet boundary conditions on a variable that has Argyris shape functions, a locking effect can occur if the boundary is curved and constraint order of 5 is used. Use a constraint order of 4 if the boundary is curved and 5 for straight boundaries.

The Argyris element defines the following degrees of freedom (where u is the base name and x and y are the spatial coordinate names):

- u at corners
- ux and uy at corners, meaning derivatives of u

- uxx, uxy, and uyy at corners, meaning second derivatives
- un at side midpoints, meaning a normal derivative. The direction of the normal is to the right if moving along an edge from a corner with lower mesh vertex number to a corner with higher number

The Argyris element defines the following field variables (where sdim = space dimension = 2 and edim = mesh element dimension):

- u
- ux, meaning the derivative of u with respect to x
- uxy, meaning a second derivative, defined for edim = sdim and edim = 0
- $uxTy$, the tangential derivative variable, meaning the y-component of the tangential projection of the gradient of ux, defined for 0 < edim < sdim

When calculating the derivatives, the global spatial coordinates are always expressed with shape order 1 in the Argyris element.

THE HERMITE ELEMENT

On each mesh element, the functions in the Hermite finite element space are the same as for the Lagrange element, namely, all polynomials of degree (at most) k in the local coordinates. The difference lies in which DOFs are used. For the Hermite element, a DOF `u` exists at each Lagrange point of order k, except at those points adjacent to a corner of the mesh element. These DOFs are the values of the function. In addition, other DOFs exist for the first derivatives of the function (with respect to the global coordinates) at the corners (`ux` and `uy` in 2D). Together, these DOFs determine the polynomials completely. The functions in the Hermite finite element space have continuous derivatives between mesh elements at the mesh vertices. However, at other common points for two mesh elements, these derivatives are not continuous. You can think of the Hermite element as lying between the Lagrange and Argyris elements.

The Hermite element is available with all types of mesh elements except pyramids. The order $k \geq 3$ can be arbitrary, but the available numerical integration formulas usually limits its usefulness to $k \leq 5$ ($k \leq 4$ for tetrahedral meshes).

When setting Dirichlet boundary conditions on a variable that has Hermite shape functions, a locking effect can occur if the boundary is curved and the constraint order `cporder` is the same as the order of the Hermite element. This means that the derivative becomes overconstrained at mesh vertices at the boundary, due to the implementation of the boundary conditions. To prevent this locking, you can specify `cporder` to be the element order minus 1.

The Hermite element defines the following degrees of freedom:

- The value of the variable `basename` at each Lagrange node point that is not adjacent to a corner of the mesh element.
- The values of the first derivatives of `basename` with respect to the global spatial coordinates at each corner of the mesh element. The names of these derivatives are formed by appending the spatial coordinate names to `basename`.

The Hermite element defines the following field variables. Denote `basename` with u, and let x and y denote (not necessarily distinct) spatial coordinates. The variables are (sdim = space dimension and edim = mesh element dimension):

- u
- ux, meaning the derivative of u with respect to x, defined when edim = sdim or edim=0
- uxy, meaning a second derivative, defined when edim = sdim

- uTx, the tangential derivative variable, meaning the x-component of the tangential projection of the gradient, defined when $0 < \mathrm{edim} < \mathrm{sdim}$
- $uTxy$, meaning xy-component of the tangential projection of the second derivative, defined when $\mathrm{edim} < \mathrm{sdim}$

When calculating the derivatives, the global spatial coordinates are expressed as polynomials of degree (at most) `sorder` in the local coordinates.

BUBBLE ELEMENTS

Bubble elements have shape functions that are zero on the boundaries of the mesh element and have a maximum in the middle of the mesh element. The shape function (there is only one for each mesh element) is defined by a lowest-order polynomial that is zero on the boundary of the element.

The bubble element are available with all types of mesh elements.

The bubble element has a single degree of freedom, `basename`, at the midpoint of the mesh element.

The bubble element defines the following field variables. Denote `basename` with u, and let x and y denote (not necessarily distinct) spatial coordinates. The variables are (sdim = space dimension and edim = mesh element dimension):

- u, defined when $\mathrm{edim} \le \mathrm{mdim}$, $u = 0$ if $\mathrm{edim} < \mathrm{mdim}$.
- ux, meaning the derivative of u with respect to x, defined when $\mathrm{edim} = \mathrm{mdim} = \mathrm{sdim}$.
- $u\mathsf{T}x$, the tangential derivative variable, meaning the x-component of the tangential projection of the gradient, defined when $\mathrm{mdim} < \mathrm{sdim}$ and $\mathrm{edim} \le \mathrm{mdim}$. $u\mathsf{T}x = 0$ if $\mathrm{edim} < \mathrm{mdim}$.
- $u\mathsf{T}xy$, meaning the xy-component of the tangential projection of the second derivative, defined when $\mathrm{mdim} < \mathrm{sdim}$ and $\mathrm{edim} \le \mathrm{mdim}$. $u\mathsf{T}xy = 0$ if $\mathrm{edim} < \mathrm{mdim}$.

THE CURL ELEMENT

In electromagnetics, *curl elements* (also called *vector elements* or *Nédélec's elements of the first kind*) are widely used. Each mesh element has DOFs corresponding only to tangential components of the field. For example, in a tetrahedral mesh in 3D each of the three edges in a triangle face element has degrees of freedom that are tangential components of the vector field in the direction of the corresponding edges, and in the interior of the triangle there are degrees of freedom that correspond to vectors tangential to the triangle itself (if the element order is high enough). Finally, in the interior of the mesh tetrahedron there are degrees of freedom in all coordinate directions (if the element order is high enough). This implies that tangential components of the vector field are continuous across element boundaries, but the normal component is not necessarily continuous. This also implies that the curl of the vector field is an integrable function, so these elements are suitable for equations using the curl of the vector field.

The curl elements are available for all types of mesh elements. The polynomial order of the curl element can be at most three in 3D and at most four in 2D and 1D.

When postprocessing curl elements (vector elements), higher-order spatial derivatives of the fields are not available.

Detailed description of the Curl Element

The precise relation between the vector field (actually a one-form) and the DOFs of the curl element is rather complicated. We start by introducing for every mesh element T of dimension d the local vector shape function space $\mathrm{Curl}_k(T)$ consisting of vector fields $\Phi = (\Phi_1, \ldots, \Phi_d)$ satisfying the following condition:

$$\mathrm{Curl}_k(T) = \{\Phi; \Phi_i \in \mathrm{Lag}_k(T), \xi_1\Phi_1 + \ldots + \xi_d\Phi_d \in \mathrm{Lag}_k(T)\}$$

where $\mathrm{Lag}_k(T)$ is the Lagrange shape function space defined in the section on Lagrange shape functions. There is one exception; for pyramid mesh elements the definition needs to be modified as follows:

$$\mathrm{Curl}_k(T) = \{\Phi = \Psi + \nabla\psi; \Psi_i \in \mathrm{Lag}_k(T), \psi \in \mathrm{Lag}_k(T), \xi_1\Phi_1 + \ldots + \xi_d\Phi_d \in \mathrm{Lag}_k(T)\}$$

Next we introduce a transformation between local and global coordinates for a vector field in a mesh element T of dimension d embedded in space of dimension D. For a vector field in global coordinates $\varphi = (\varphi_1, \ldots, \varphi_D)$, the corresponding vector field in local coordinates is $\Phi = (\Phi_1, \ldots, \Phi_d)$ with components defined by

$$\Phi_i = \sum_{j=1}^{D} \frac{\partial x_j}{\partial \xi_i} \varphi_j$$

For mesh elements of full dimension $d = D$, this relation can be inverted to give

$$\varphi_j = \sum_{i=1}^{d} \frac{\partial \xi_i}{\partial x_j} \Phi_i$$

In particular, if T has full dimension, $\tilde{T} \subset T$ is a face or edge of T, and Φ is a vector field on T in local coordinates, then a vector field φ can be computed, and from its restriction to $\tilde{T}$ a vector field $\tilde{\Phi}$ in local coordinates on $\tilde{T}$.

Only the components of the global coordinate vector field φ can be directly evaluated as variables.

The relation between DOFs and vector fields is defined by specifying in each mesh element a number of pairs (p, v), where p is a point in the mesh element (given in local coordinates) and v is a vector. The DOFs are then defined as

$$\mathrm{DOF}_{(p,v)} = v \cdot \Phi(p)$$

If the number of pairs in each mesh element of type T is chosen to be equal to the dimension of $\mathrm{Curl}_k(T)$, the values of these DOFs uniquely define the vector field Φ. Typically, some of the pairs (p, v) have p in the interior of T, while others have p on some face or edge $\tilde{T} \subset T$. It is convenient to think of the DOFs corresponding to the latter points as inherited from $\tilde{T}$.

Since there might be more than one DOF in the same point p, DOF names have a suffix consisting of two integers, to distinguish different DOFs at the same point.

The choice of pairs (p, v) must take into account the orientation of each mesh element. Failing to do this would result in a vector field whose tangential component changes direction at the boundary between mesh elements. This is done by means of a global numbering of all mesh vertices.

Edge mesh elements Each edge mesh element has k DOFs. Let P_0, P_1 be the local coordinates of the endpoints of the edge, written in order of increasing mesh vertex indices (so P_0, P_1 is some permutation of the points 0 and 1 on the real line). Let v_1 be the 1-dimensional vector $\overrightarrow{P_0P_1}$. In local coordinates, the DOFs on the edge element are defined by the following pairs (p, v):

P	V	DOF NAME SUFFIX
$\frac{l}{k+1}, 1 \le l \le k$	v_1	10

Triangular mesh elements Each triangular mesh element has k DOFs on each edge (inherited from the corresponding edge elements) and $k(k-1)$ DOFs in the interior. Let P_0, P_1, P_2 be the local coordinates of the triangle vertices, in order of increasing mesh vertex indices (so P_0, P_1, P_2 is some permutation of the points $(0, 0)$,

(1, 0), (0, 1)). Let $v_1 = \overrightarrow{P_0P_1}$ and $v_2 = \overrightarrow{P_0P_2}$. Then the interior DOFs in this triangle are defined by the following pairs (p, v):

P	V	DOF NAME SUFFIX
$\left(\frac{l}{k+1}, \frac{m}{k+1}\right), 1 \le l, 1 \le m, l + m \le k$	v_1	20
$\left(\frac{l}{k+1}, \frac{m}{k+1}\right), 1 \le l, 1 \le m, l + m \le k$	v_2	21

Quadrilateral mesh elements Each quadrilateral mesh element has k DOFs on each edge (inherited from the corresponding edge elements) and $2k(k-1)$ DOFs in the interior. Let P_0 be the local coordinate of the vertex with lowest global index, P_1 the other vertex on the same horizontal edge as P_0, and P_2 the other vertex on the same vertical edge as P_0 (so P_0, P_1, P_2 is some subset of the points (0, 0), (1, 0), (0, 1), (1, 1)). Let $v_1 = \overrightarrow{P_0P_1}$ and $v_2 = \overrightarrow{P_0P_2}$. Then the interior DOFs in this quadrilateral are defined by the following pairs (p, v):

P	V	DOF NAME SUFFIX
$\left(\frac{l}{k+1}, \frac{m}{k}\right), 1 \le l \le k, 1 \le m \le k-1$	v_1	10
$\left(\frac{l}{k}, \frac{m}{k+1}\right), 1 \le l \le k-1, 1 \le m \le k$	v_2	10

Tetrahedral mesh elements Each tetrahedral mesh element has k DOFs on each edge, $k(k-1)$ DOFs on each face, and $k(k-1)(k-2)/2$ DOFs in the interior. Let P_0, P_1, P_2, P_3 be the local coordinates of the tetrahedron vertices, in order of increasing mesh vertex indices (so P_0, P_1, P_2, P_3 is some permutation of the points (0, 0, 0), (1, 0, 0), (0, 1, 0), (0, 0, 1)). Let

$$v_1 = \overrightarrow{P_0P_1},\ v_2 = \overrightarrow{P_0P_2},\ \text{and}\ v_3 = \overrightarrow{P_0P_3}$$

Then the interior DOFs in this tetrahedron are defined by the following pairs (p, v):

P	V	DOF NAME SUFFIX
$\left(\frac{l}{k+1}, \frac{m}{k+1}, \frac{n}{k+1}\right), 1 \le l, 1 \le m, 1 \le n, l + m + n \le k$	v_1	30
$\left(\frac{l}{k+1}, \frac{m}{k+1}, \frac{n}{k+1}\right), 1 \le l, 1 \le m, 1 \le n, l + m + n \le k$	v_2	31
$\left(\frac{l}{k+1}, \frac{m}{k+1}, \frac{n}{k+1}\right), 1 \le l, 1 \le m, 1 \le n, l + m + n \le k$	v_3	32

Hexahedral mesh elements Each hexahedral mesh element has k DOFs on each edge, $2k(k-1)$ DOFs on each face, and $3k(k-1)^2$ DOFs in the interior. Let P_0 be the local coordinate of the vertex with lowest global index, and let P_1, P_2, P_3 be the other vertices that differ from P_0 only in the ξ_1, ξ_2, ξ_3 coordinates respectively. Let

$$v_1 = \overrightarrow{P_0P_1},\ v_2 = \overrightarrow{P_0P_2},\ v_3 = \overrightarrow{P_1P_3}$$

Then the interior DOFs in this hexahedron are defined by the following pairs (p, v):

P	V	DOF NAME SUFFIX
$\left(\frac{l}{k+1}, \frac{m}{k}, \frac{n}{k}\right), 1 \le l \le k, 1 \le m \le k-1, 1 \le n \le k-1$	v_1	10
$\left(\frac{l}{k}, \frac{m}{k+1}, \frac{n}{k}\right), 1 \le l \le k-1, 1 \le m \le k, 1 \le n \le k-1$	v_2	10
$\left(\frac{l}{k}, \frac{m}{k}, \frac{n}{k+1}\right), 1 \le l \le k-1, 1 \le m \le k-1, 1 \le n \le k$	v_3	10

Prism mesh elements Each prism mesh element has k DOFs on each edge, $k(k-1)$ DOFs on each triangular face, $2k(k-1)$ DOFs on each quadrilateral face, and $k(k-1)(3k-4)/2$ DOFs in the interior. Let P_0 be the local coordinate of the vertex with lowest global index, let P_1, P_2 be the other two vertices on the same triangular face as P_0, numbered so that P_1 has lower index than P_2, and let P_3 be the third point connected to P_0 by an edge. Let

$$v_1 = \overrightarrow{P_0P_1}, \; v_2 = \overrightarrow{P_0P_2}, \; v_3 = \overrightarrow{P_1P_3}$$

Then the interior DOFs in this prism are defined by the following pairs (p, v):

P	V	DOF NAME SUFFIX
$\left(\frac{l}{k+1}, \frac{m}{k+1}, \frac{n}{k}\right), 1 \le l, 1 \le m, l+m \le k, 1 \le n \le k-1$	v_1	20
$\left(\frac{l}{k+1}, \frac{m}{k+1}, \frac{n}{k}\right), 1 \le l, 1 \le m, l+m \le k, 1 \le n \le k-1$	v_2	21
$\left(\frac{l}{k}, \frac{m}{k}, \frac{n}{k+1}\right), 1 \le l, 1 \le m, l+m \le k-1, 1 \le n \le k$	v_3	10

Pyramid mesh elements Each pyramid mesh element has k DOFs on each edge, $k(k-1)$ DOFs on each triangular face, $2k(k-1)$ DOFs on the quadrilateral face, and $k(k-1)(2k-1)/2$ DOFs in the interior. Let $v_1 = (1, 0, 0)$, $v_2 = (0, 1, 0)$, and $v_3 = (0, 0, 1)$. Then the interior DOFs in this pyramid are defined by the following pairs (p, v):

P	V	DOF NAME SUFFIX
$\left(\frac{l}{k+1}, \frac{m}{k+1}, \frac{n}{k+1}\right), 1 \le l \le k-n, 1 \le m \le k-n, 1 \le n \le k$	v_1	30
$\left(\frac{l}{k+1}, \frac{m}{k+1}, \frac{n}{k+1}\right), 1 \le l \le k-n, 1 \le m \le k-n, 1 \le n \le k$	v_2	31
$\left(\frac{l}{k+1}, \frac{m}{k+1}, \frac{n}{k+1}\right), 1 \le l \le k-n, 1 \le m \le k-n, 1 \le n \le k$	v_3	32

Examples

For convenience we provide here explicit formulas for the Curl shape functions for the lowest orders and most common mesh elements. For each element type, the shape function corresponding to each DOF is written out in local coordinates, for a particular ordering of the mesh element vertices. For other numbers, the difference is that the vector v changes direction for some of the DOFs. For DOFs with suffix 10 this simply means that the corresponding shape functions change sign. Other shape functions might be replaced by a linear combination of the shape functions corresponding to DOFs at the same node point.

Triangular mesh elements The following formulas assume that the vertices of the triangle, in order of increasing mesh vertex index, have local coordinates (0, 0), (1, 0), (0, 1).

For order $k = 1$, the Curl shape space has dimension 3, and has the following basis:

P	V	DOF NAME SUFFIX	LOCAL VECTOR FIELD
(1/2,0)	(1,0)	10	$(1 - \xi_2, \xi_1)$
(0,1/2)	(0,1)	10	$(\xi_2, 1 - \xi_1)$
(1/2,1/2)	(-1,1)	10	$(-\xi_2, \xi_1)$

For order $k = 2$, the Curl shape space has dimension 8, and has the following basis:

P	V	DOF NAME SUFFIX	LOCAL VECTOR FIELD
(1/3,0)	(1,0)	10	$(2 - 3\xi_1 - 5\xi_2 + 3\xi_1\xi_2 + 3\xi_2^2, 2\xi_1 - 3\xi_1^2 - 3\xi_1\xi_2)$
(2/3,0)	(1,0)	10	$(-1 + 3\xi_1 + \xi_2 - 3\xi_1\xi_2, -\xi_1 + 3\xi_1^2)$
(0,1/3)	(0,1)	10	$(2\xi_2 - 3\xi_1\xi_2 - 3\xi_2^2, 2 - 5\xi_1 - 3\xi_2 + 3\xi_1^2 + 3\xi_1\xi_2)$
(0,2/3)	(0,1)	10	$(-\xi_2 + 3\xi_2^2, -1 + \xi_1 + 3\xi_2 - 3\xi_1\xi_2)$
(2/3,1/3)	(-1,1)	10	$(\xi_2 - 3\xi_1\xi_2, -\xi_1 + 3\xi_1^2)$
(1/3,2/3)	(-1,1)	10	$(\xi_2 - 3\xi_2^2, -\xi_1 + 3\xi_1\xi_2)$
(1/3,1/3)	(1,0)	20	$(6\xi_2 - 3\xi_1\xi_2 - 6\xi_2^2, -3\xi_1 + 3\xi_1^2 + 6\xi_1\xi_2)$
(1/3,1/3)	(0,1)	21	$(-3\xi_2 + 6\xi_1\xi_2 + 3\xi_2^2, 6\xi_1 - 6\xi_1^2 - 3\xi_1\xi_2)$

Quadrilateral mesh elements The following formulas assume that the vertices of the quadrilateral, in order of increasing mesh vertex index, have local coordinates (0, 0), (1, 0), (0, 1), (1, 1).

For order $k = 1$ the Curl shape space has dimension 4, and has the following basis:

P	V	DOF NAME SUFFIX	LOCAL VECTOR FIELD
(1/2,0)	(1,0)	10	$(1 - \xi_2, 0)$
(1/2,1)	(1,0)	10	$(\xi_2, 0)$
(0,1/2)	(0,1)	10	$(0, 1 - \xi_1)$
(1,1/2)	(0,1)	10	$(0, \xi_1)$

For order $k = 2$ the Curl shape space has dimension 12, and has the following basis:

P	V	DOF NAME SUFFIX	LOCAL VECTOR FIELD
(1/3,0)	(1,0)	10	$((2 - 3\xi_1)(1 - \xi_2)(1 - 2\xi_2), 0)$
(2/3,0)	(1,0)	10	$((3\xi_1 - 1)(1 - \xi_2)(1 - 2\xi_2), 0)$
(1/3,1)	(1,0)	10	$((2 - 3\xi_1)\xi_2(2\xi_2 - 1), 0)$

P	V	DOF NAME SUFFIX	LOCAL VECTOR FIELD
(2/3,1)	(1,0)	10	$((3\xi_1 - 1)\xi_2(2\xi_2 - 1), 0)$
(0,1/3)	(0,1)	10	$(0, (2 - 3\xi_2)(1 - \xi_1)(1 - 2\xi_1))$
(0,2/3)	(0,1)	10	$(0, (3\xi_2 - 1)(1 - \xi_1)(1 - 2\xi_1))$
(1,1/3)	(0,1)	10	$(0, (2 - 3\xi_2)\xi_1(2\xi_1 - 1))$
(1,2/3)	(0,1)	10	$(0, (3\xi_2 - 1)\xi_1(2\xi_1 - 1))$
(1/3,1/2)	(1,0)	10	$(4(2 - 3\xi_1)\xi_2(1 - \xi_2), 0)$
(2/3,1/2)	(1,0)	10	$(4(3\xi_1 - 1)\xi_2(1 - \xi_2), 0)$
(1/2,1/3)	(0,1)	10	$(0, 4(2 - 3\xi_2)\xi_1(1 - \xi_1))$
(1/2,2/3)	(0,1)	10	$(0, 4(3\xi_2 - 1)\xi_1(1 - \xi_1))$

Tetrahedral mesh elements The following formulas assume that the vertices of the tetrahedron, in order of increasing mesh vertex index, have local coordinates $(0, 0, 0)$, $(1, 0, 0)$, $(0, 1, 0)$, $(0, 0, 1)$.

For order $k = 1$ the Curl shape space has dimension 6, and has the following basis:

P	V	DOF NAME SUFFIX	LOCAL VECTOR FIELD
(1/2,0,0)	(1,0,0)	10	$(1 - \xi_2 - \xi_3, \xi_1, \xi_1)$
(0,1/2,0)	(0,1,0)	10	$(\xi_2, 1 - \xi_1 - \xi_3, \xi_2)$
(0,0,1/2)	(0,0,1)	10	$(\xi_3, \xi_3, 1 - \xi_1 - \xi_2)$
(1/2,1/2,0)	(-1,1,0)	10	$(-\xi_2, \xi_1, 0)$
(1/2,0,1/2)	(-1,0,1)	10	$(-\xi_3, 0, \xi_1)$
(0,1/2,1/2)	(0,-1,1)	10	$(0, -\xi_3, \xi_2)$

Hexahedral mesh elements The following formulas assume that the vertices of the hexahedron, in order of increasing mesh vertex index, have local coordinates $(0, 0, 0)$, $(1, 0, 0)$, $(0, 1, 0)$, $(1, 1, 0)$, $(0, 0, 1)$, $(1, 0, 1)$, $(0, 1, 1)$, $(1, 1, 1)$.

For order $k = 1$ the Curl shape space has dimension 12, and has the following basis:

P	V	DOF NAME SUFFIX	LOCAL VECTOR FIELD
(1/2,0,0)	(1,0,0)	10	$((1 - \xi_2)(1 - \xi_3), 0, 0)$
(1/2,1,0)	(1,0,0)	10	$(\xi_2(1 - \xi_3), 0, 0)$
(1/2,0,1)	(1,0,0)	10	$((1 - \xi_2)\xi_3, 0, 0)$
(1/2,1,1)	(1,0,0)	10	$(\xi_2\xi_3, 0, 0)$
(0,1/2,0)	(0,1,0)	10	$(0, (1 - \xi_1)(1 - \xi_3), 0)$
(1,1/2,0)	(0,1,0)	10	$(0, \xi_1(1 - \xi_3), 0)$
(0,1/2,1)	(0,1,0)	10	$(0, (1 - \xi_1)\xi_3, 0)$
(1,1/2,1)	(0,1,0)	10	$(0, \xi_1\xi_3, 0)$

P	V	DOF NAME SUFFIX	LOCAL VECTOR FIELD
(0,0,1/2)	(0,0,1)	10	$(0, 0, (1-\xi_1)(1-\xi_2))$
(1,0,1/2)	(0,0,1)	10	$(0, 0, \xi_1(1-\xi_2))$
(0,1,1/2)	(0,0,1)	10	$(0, 0, (1-\xi_1)\xi_2)$
(1,1,1/2)	(0,0,1)	10	$(0, 0, \xi_1\xi_2)$

The curl element defines the following degrees of freedom: `dofbasename` $d\,c$, where $d = 1$ for DOFs in the interior of an edge, $d = 2$ for DOFs in the interior of a surface, and so forth, and c is a number between 0 and $d - 1$.

The curl element defines the following field variables (where comp is a component name from `compnames`, and dcomp is a component from `dcompnames`, sdim = space dimension and edim = mesh element dimension):

- comp, meaning a component of the vector, defined when edim = sdim.
- `tcomp`, meaning one component of the tangential projection of the vector onto the mesh element, defined when edim < sdim.
- comp$x$, meaning the derivative of a component of the vector with respect to global spatial coordinate x, defined when edim = sdim.
- `tcomp`Tx, the tangential derivative variable, meaning the x component of the projection of the gradient of `tcomp` onto the mesh element, defined when edim < sdim. Here, x is the name of a spatial coordinate.
- dcomp, meaning a component of the anti-symmetrized gradient, defined when edim = sdim.
- `tdcomp`, meaning one component of the tangential projection of the anti-symmetrized gradient onto the mesh element, defined when edim < sdim.

For performance reasons, use dcomp in expressions involving the curl rather than writing it as the difference of two gradient components.

For the computation of components, the global spatial coordinates are expressed as polynomials of degree (at most) `sorder` in the local coordinates.

DISCONTINUOUS LAGRANGE ELEMENTS AND NODAL DISCONTINUOUS LAGRANGE ELEMENTS

The functions in the discontinuous Lagrange elements space are the same as for the standard Lagrange element, with the difference that the basis functions are discontinuous between the mesh elements. These elements are available in two variants: *discontinuous Lagrange* elements and *nodal discontinuous Lagrange* elements. The difference between these two is that the latter has optimal placement of degrees of freedom on triangle and tetrahedral meshes with respect to certain interpolation error estimates, whereas the former are available on all types of mesh elements with arbitrary polynomial order k.

The discontinuous element defines the following field variables. Denote `basename` with u, and let x denote the spatial coordinates. The variables are (edim is the mesh element dimension):

- u, defined when edim = mdim.
- ux, meaning the derivative of u with respect to x, defined when edim = mdim = sdim.
- uTx, the tangential derivative variable, meaning the derivative of u with respect to x, defined when edim = mdim < sdim.

DENSITY ELEMENTS

The functions in the density elements space are the same as for the discontinuous element if the mesh element is not curved. If the element is curved, the functions define a density of the given order in *local* coordinates, and the value in global coordinates depends on the transformation between local and global coordinates. The DOF values are proportional to the volume of the mesh elements.

The discontinuous elements are available with all types of mesh elements. The order k can be arbitrary, but the available numerical integration formulas usually limits its usefulness to $k \leq 5$ ($k \leq 4$ for tetrahedral meshes).

The density element defines the following field variables. Denote `basename` with u, and let x denote the spatial coordinates. The variables are (edim is the mesh element dimension):

- u, defined when edim = sdim.
- ux, meaning the derivative of u with respect to x, defined when edim = sdim.

GAUSS POINT DATA ELEMENTS

The Gauss point data elements are not shape functions in the usual sense. Instead, they define discrete degrees of freedom associated with the Gauss points used in an integration rule of a given order. To make these degrees of freedom available for evaluation and use in equations, a field variable with the same name as the degree of freedom is also defined. This field can be evaluated at any point inside the element but simply evaluates to the degree of freedom value at the closest Gauss point.

Use the Gauss point data elements to, for example, store historical values at the integration points in models with hysteresis, or to solve an implicit equation for a material property at each point. Make sure to use elements of the same order as the integration rule used for assembly of the main PDE, typically twice the discretization order of the main dependent variables. This ensures that the Gauss point data really behaves as a truly local quantity without any spatial correlation.

The Gauss point data element defines the following field variable. Denote `basename` with u and let edim be the evaluation dimension: u, defined when edim <= mdim.

DIVERGENCE ELEMENTS

For modeling the **B** (magnetic flux density) and **D** (electric displacement) fields in electromagnetics, the divergence elements (also called *Raviart-Thomas elements*) are useful. The DOFs on the boundary of a mesh element correspond to normal components of the field. In addition, there are DOFs corresponding to all vector field components in the interior of the mesh element of dimension sdim (if the order is high enough). This implies that the normal component of the vector field is continuous across element boundaries, but the tangential components are not necessarily continuous. This also implies that the divergence of the vector field is an integrable function, so these elements are suitable for equations using the divergence of the vector field.

The divergence element are available with all types of mesh elements except pyramids. The polynomial order of the divergence element can be at most three in 3D, and at most four in 2D and 1D.

The divergence element defines the following degrees of freedom: `dofbasename` on element boundaries, and `dofbasename` sdim c, c = 0, …, sdim – 1 for DOFs in the interior.

The divergence element defines the following field variables (where comp is a component name from `compnames`, divname is the `divname`, sdim = space dimension and edim = mesh element dimension):

- comp, meaning a component of the vector, defined when edim = sdim.
- ncomp, meaning one component of the projection of the vector onto the normal of mesh element, defined when edim = sdim – 1.
- comp$x$, meaning the derivative of a component of the vector with respect to global spatial coordinate x, defined when edim = sdim.
- ncompTx, the tangential derivative variable, meaning the x component of the projection of the gradient of ncomp onto the mesh element, defined when edim < sdim. Here, x is the name of a spatial coordinate. ncompTx = 0.
- divname, means the divergence of the vector field.

For performance reasons, use **divname** in expressions involving the divergence rather than writing it as the sum of **sdim** gradient components. For the computation of components, the global spatial coordinates are expressed as polynomials of degree (at most) `sorder` in the local coordinates.

20

Studies and Solvers

This chapter describes the study types and solvers available in the COMSOL Multiphysics® software.

In this chapter:

- Introduction to Solvers and Studies
- Study and Study Step Types
- Computing a Solution
- Solution Operation Nodes and Solvers
- Solution Attribute Nodes
- Solution Utility Nodes
- Job Configurations
- Harmonic Perturbation, Prestressed Analysis, and Small-Signal Analysis

Introduction to Solvers and Studies

The process of solving a problem in COMSOL Multiphysics is a hierarchy. The Study node ( ) is the coarsest level (the top level). It contains the least amount of detail and defines a Study branch (see Branches and Subbranches in the Tree Structure).

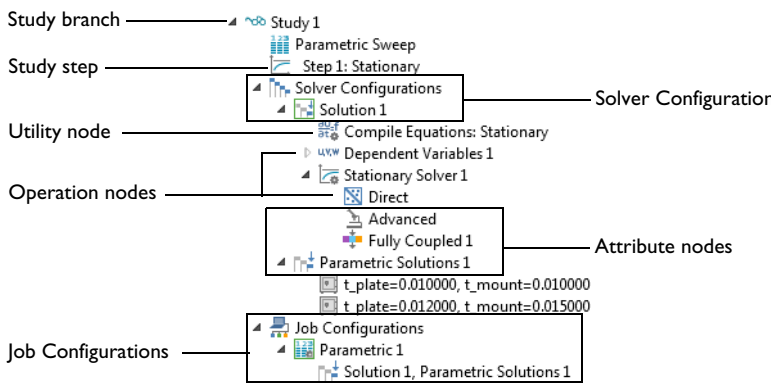

Figure 20-1: An example of the hierarchy under the Study node. This is the completed study and solver sequence for the Diagonal Mounting Detail of a Communication Mast model from the COMSOL Multiphysics Applications Libraries. Some hierarchical categories for this sequence are shown.

ADDING A STUDY AND STUDY STEPS

When creating a new model, you can add any of the predefined Study and Study Step Types. At any time you can also add studies (see The Add Study Window). However you choose to add a study, a study node is added to The Model Builder including a corresponding *study step* (for example, **Stationary** in Figure 20-1), and in some cases, additional study steps. The study step represents the next level of detail.

DEFINING STUDY STEPS AND CREATING SOLVER CONFIGURATIONS

Most study steps are used to control the form of the equations, what physics interfaces are included in the computation, and what mesh is used. A study step **Settings** window has a Physics and Variables Selection section where inclusion and exclusion of physics interfaces and variables can be adjusted and set. There are also Common Study Step Settings for many of the study features added to a sequence.

Study steps correspond to part of a *solver configuration* (solver sequence), which is the next level of detail. There are also study steps for cluster computing, for example, which correspond to part of the Job Configurations.

Solver Configurations contain nodes that define variables to solve for, the solvers and settings, and additional sequence nodes for storing the solution, for example (see Figure 20-1). The solvers also have nodes that can control the solver settings in detail. Knowing The Relationship Between Study Steps and Solver Configurations is useful to help define and edit the settings before computing a solution. Bear in mind, however, that the default solver settings defined by the study usually provide a good starting point.

COMPUTING THE SOLUTION

Once the studies are added and defined, the simplest option to compute the solution is to right-click the **Study** node for a predefined study type and select **Compute** (=). This generates the default solver configuration for the corresponding study steps and computes the solution. There are a variety of techniques you can use while Computing a Solution, including many custom adjustments.

CONTROLLING AND CUSTOMIZING SOLVER SETTINGS

The settings can also be controlled at any level of detail. For example, you can add individual study steps when there is not a predefined study type that corresponds to the simulations you are interested in doing. Also, by changing the settings in the solver configuration you can, for example, control the desired tolerance for the error in the solution or which time-integration method or linear solver to use.

Solver Operation, Attribute, and Utility Nodes

There are different groups of feature types you can use to customize and fine tune the model. There are three classes of features that are subnodes to a Solution node. See Figure 20-1 for examples:

- *Operation nodes* (typically solvers) produce solutions as output. In particular, the output from the operation node that ran last is available for results analysis and visualization. See Solution Operation Nodes and Solvers.
- *Attribute nodes* hold properties that control the behavior of operation features. See Solution Attribute Nodes.
- *Utility nodes* handle special types of operations. Applicable solution utility nodes are available from the **Solver>Other** submenu. See Solution Utility Nodes.

Some of the settings in subnodes are synchronized with the corresponding Study setting. They are unavailable by default and can only be controlled from the subnode by changing the **Defined by study step** setting to **User defined**.

There are also Study Extension Steps (Parametric Sweep and Optimization) and categories of Advanced Study Extension Steps (Parametric, Batch, and Cluster Computing) for additional settings customization and extensions of a study.

For some modules, more settings are available with respect to Harmonic Perturbation, Prestressed Analysis, and Small-Signal Analysis.

About Solver Commands and Solution Object Data in the *COMSOL Multiphysics Programming Reference Manual.*

MULTIPLE STUDY STEPS VS. MULTIPLE STUDIES

You can create multiple studies with one or more study step in each study. There are some aspects to consider when choosing to use multiple study steps in a single study versus multiple studies, each with a single or just a couple of study steps.

The main advantage of using multiple study steps is that initial conditions are automatically taken from the preceding step. It is also easier to run the whole sequence in one go.

When you use separate studies, you have to use more settings in the main **Study** node to point to the results in the preceding study. This approach can be useful if you need to examine the results of one study step before proceeding to the next. See Study Reference for information about referencing another study.

There are also some differences in how results are stored and shown. In a sequence with several study steps, you typically only see the results of the last step as a default. You can, however, access the results of the intermediate steps manually.

The Add Study Window

The **Add Study** window is similar to the **Select Study** window accessed through The Model Wizard. It has the same studies available and is a quick way to add a study (or studies) to models. You can have more than one study (each generating one or more solutions) for different scenarios using the same geometry and physics interface. The predefined study types correspond to the most commonly performed simulations for different physics. However, sometimes you might want to do other investigations. For example, you might want to solve a stationary problem for a physical quantity and use that solution as input to a time-dependent simulation for another physical quantity.

For example, add a **Stationary** study step ( ), followed by a **Time Dependent** study step ( ) and then for each study step, choose the physics interfaces to include.

To open the **Add Study** window, right-click the root node and choose **Add Study** , or use one of the following alternatives:

Win	• From the **Home** toolbar, click **Add Study** or select **Windows>Add Study**. • From the **Study** toolbar, click **Add Study**.

Mac Linux	• In the Model Toolbar, click **Add Study** . • In the **Study** toolbar, click **Add Study**. • Select **Windows>Add Study**.

	The **Add Study** toolbar button is a toggle button: Click it again to close the **Add Study** window.

TO ADD A STUDY TO A MODEL ROOT NODE

1 In the **Add Study** window, from the branches under **Studies**, select the type of study to perform.

The available options depend on the set of physics interfaces included in the model. Some study types are applicable to all physics interfaces for which you choose to solve, while others are not, but in some way all are available. Select one of the most common and applicable study types at the top of the list or a study type from one of the following branches:

- **General Studies** — Study types that are generally applicable, such as **Stationary** and **Time Dependent**.
- **Preset Studies for Selected Physics Interfaces** — Study types applicable to all physics interfaces that you have chosen to solve for.
- **Preset Studies for Selected Multiphysics** — Study types applicable to the multiphysics couplings that you have chosen to solve for.
- **More Studies** — This branch contains fundamental study types (**Stationary**, **Time Dependent**, **Eigenfrequency**, **Eigenvalue** and **Frequency Domain**) that are not applicable to any of the physics interfaces being solved for.
- **Preset Studies for Some Physics Interfaces** — The study types recognized by some, but not all, of the physics interfaces being solved for.
- **Empty Study** to add a study without any study steps.

2 When there is already a physics interface in the model, the existing **Physics** are listed under **Physics interfaces in study**. Physics interfaces that are included appear with a check mark ( ) in the **Solve** column. Click in the row and column to remove the check mark ( ) and remove that physics interface from the study. If there are multiphysics couplings in the models they appear under **Multiphysics couplings in study** and can be controlled in the same way as the physics interfaces-

3 Click the **Add Study** button, press Enter, or right-click the study and choose **Add Study**. The study is added under the **Study** node in the **Model Builder**.

	• Creating a New Model • Study and Study Step Types

Study

A **Study** node ( ) holds all the nodes that define how to solve a model (see Figure 20-1). These nodes are divided into three broad categories:

- Study steps, which determine overall settings suitable for a certain study type. The study steps added are based on the chosen study types.
- Solver Configurations, which contain the solvers and related configurations for dependent variables to solve for, intermediate storage of solutions, and specific solver settings. Those nodes are normally created by the study step, and you do not need to make any changes here. This branch is only initially visible if you select **Solver and Job Configurations** in the **Show More Options** dialog box but appears after solving or if you choose **Show Default Solver** from the **Study** node's context menu.
- Job Configurations, which contain all jobs defined for a study (distributed parametric jobs, batch jobs, and cluster computing). This branch is only visible if you select **Solver and Job Configurations** in the **Show More Options** dialog box.

Right-click a **Study** node and choose **Move Up** ( ), **Move Down** ( ), or **Delete** ( ) (or use the Ctrl+Up, Ctrl+Down, or Delete keys) to move a **Study** node up or down, relative to other **Study** nodes, or to remove it.

Also see Study Reference to refer to another study in the model. The main **Study** node has this section:

STUDY SETTINGS

The **Generate default plots** check box is selected by default so that plot groups with suitable default plots for the physics interfaces in the study are generated automatically when computing the solution. Clear this check box if you do not want any default plots.

The **Generate convergence plots** check box is selected or cleared by default based on the setting for generating convergence plots in the **Preferences>Results** dialog box. Clear this check box if you do not want convergence plots to be generated during the solution process.

Select the **Store solution for all intermediate study steps** check box (cleared by default) to make the study add **Solution Store** nodes after all intermediate study steps in a study with multiple study steps. If this check box is not selected, **Solution Store** nodes are only added for some study step combinations.

Select the **Plot the location of undefined values** check box (cleared by default) to create a separate window that contains a plot that shows the location of any undefined values such as Inf or NaN. Such undefined values could be the result of a division by zero, for example. For a Geometry 1, for example, the window name is **Undefined Values in Geometry 1**.

	• The Add Study Window • Convergence Plots • The Relationship Between Study Steps and Solver Configurations • Solution Store

Solver Configurations

The **Solver Configurations** node ( ) contains all solver configurations defined for a study (see Figure 20-1). It displays if it has content or, to make the node available in the context menu, click the **Show More Options** button ( ) and select **Solver and Job Configurations** in the **Show More Options** dialog box.

A model is solved by computing a *solver configuration* — a scheme for computing a solution. Loosely speaking a solver configuration consists of one or more **Solution** nodes ( ), and each Solution node consists of a sequence

of subnodes specifying how to compute the solution. Typically, such a solver configuration contains information about which physics interface and geometry to use, which variables to solve for, and which solvers to use for the type of study to perform. You can also solve a model by computing a study; this defines a sequence of solver configurations and, in some cases, a sequence of Job Configurations.

Right-click the node to choose one of these options from the context menu: **Show Default Solver**, **Reset Solver to Default**, **Create Custom Solver**, **Create Solution Copy**, and **Delete Configurations**.

SHOW DEFAULT SOLVER

To display the solver that corresponds to the study steps in a study and the current physics interface settings, right-click the main **Study** node ( ) (or the **Solver Configurations** or **Job Configurations** nodes) and select **Show Default Solver** ( ).

RESET SOLVER TO DEFAULT

To reset the solver that corresponds to the study steps in a study and the current physics interface settings, right-click the **Solver Configurations** node ( ) and select **Reset Solver to Default** ( ). The solver nodes in all enabled solver configurations under the **Solver Configurations** node are then reset to the default solvers that you get when you select **Show Default Solver** and that the study uses if you have not made any changes to the solver settings. Using **Reset Solver to Default** can be useful if you have tried various solver settings and want to return to the default solvers without having to create a new solver configuration.

CREATE CUSTOM SOLVER

From the main menu, click the **Show More Options** button ( ) and select **Study and Job Configurations** in the **Show More Options** dialog box. Then right-click the **Solver Configurations** node and choose **Create Custom Solver** ( ). This adds a **Solution** node without any added solver settings or other nodes.

CREATE SOLUTION COPY

To create a copy of the solution dataset, right-click the main **Study** node ( ) or the **Solver Configurations** node ( ) and select **Create Solution Copy** ( ). A copy of the solution then appears as a **Solution - Copy** node ( ) under Solver Configurations and a corresponding **Solution - Copy** dataset ( ) under **Datasets** in the **Results** branch. This can be useful if you want to rerun the simulation with some changes to the model or solver settings. The first solution is then available in the **Solution - Copy** dataset so that you can postprocess and analyze multiple solutions. You can also right-click a **Solution** node ( ) under **Solver Configurations** and choose **Solution>Copy** ( ) to create a copy of the solution dataset for that solution.

DELETE CONFIGURATIONS

Select **Delete Configurations** ( ) to delete all solvers under the **Solver Configurations** node.

SELECTING A CLUSTER STORAGE FORMAT

Under **Solver Configurations**, right-click a **Solution** node and choose **Solution>Store on a Single Node** to specify that the solution should only be stored on a single cluster node. Choose **Solution>Store on All Nodes** if the solution should be stored on all cluster nodes. Choose **Solution>Store Solution Using Distributed Storage** if the solution should be stored using a distributed storage on clusters, which can improve performance using parallel I/O.

- Computing the Initial Values
- The Relationship Between Study Steps and Solver Configurations
- Saving and Opening Recovery Files

The Relationship Between Study Steps and Solver Configurations

Most studies and study steps correspond to part of a solver configuration that includes a solver for the specific problem, as listed in Table 20-1.

- Study
- Solver Configurations

TABLE 20-1: THE RELATIONSHIP BETWEEN COMMON STUDY STEPS AND SOLVERS

STUDY STEP	DESCRIPTION	CORRESPONDS TO SOLVER
Stationary	Generates equations without time derivatives.	Stationary Solver. A parametric continuation solver can also be created by selecting an option on the study Settings window. Also see About the Stationary Solver and About the Parametric Solver.
Time Dependent	Generates equations for transient (time-dependent) simulations.	Time-Dependent Solver. Also see About the Time-Dependent Solver.
Time Discrete	Use it for performing time-dependent analysis using the projection method.	Time Discrete Solver. Also see About the Time Discrete Solver.
Time Dependent	Use the Time Explicit Solver to solve a time-dependent problem using an explicit time-stepping scheme.	Time Explicit Solver. Also see The Time Explicit Solver Algorithms.
Eigenvalue	Generates equations formulated for computing eigenvalues and eigenfunctions.	Eigenvalue Solver. Also see The Eigenvalue Solver Algorithm.
Eigenfrequency	Similar to an Eigenvalue study step but computes eigenfrequencies instead of eigenvalues.	Eigenvalue Solver (set to transform eigenvalues to eigenfrequencies). Also see The Eigenvalue Solver Algorithm.
Frequency Domain	Generates stationary equations that are used for frequency sweeps.	It corresponds to a stationary parametric solver that is preset to linearize the equations (Stationary Solver with a Parametric attribute). By selecting the Use asymptotic waveform evaluation check box, this study step corresponds to an AWE Solver.
Time Dependent, Modal	Generates equations for time-dependent modal analysis.	Modal Solver (with Study type set to Time dependent). Also see The Modal Solver Algorithm.
Frequency Domain, Modal	Generates equations for modal analysis in the frequency domain.	Modal Solver (with Study type set to Frequency domain). Also see The Modal Solver Algorithm.

There are some study steps that do not generate equations and can only be used in combination with other study steps. These *study extension steps* do not correspond directly to any part of a solver configuration. Instead, they correspond to a part of the job configuration or modify the behavior of another study step.

STUDY EXTENSION STEPS

A Parametric Sweep is used to formulate a sequence of problems that arise when you vary some parameters in the model. The problem at a fixed parameter value is defined by the rest of the study steps in the study. It generates a Parametric Sweep (Job Configurations) node, unless the problem and parameters are such that the parametric sweep can be realized through a Stationary Solver with a Parametric node, in which case such a solver is generated in the solver configuration.

The parametric sweep can include multiple independent parameters directly, but you can also add more than one Parametric Sweep node to create nested parametric sweeps. In the **Study** branch, indentations of the node names indicate that the parametric sweeps are nested.

The Optimization study step is used to solve PDE-constrained optimization problems. This study step allows direct definition of objective functions and selection of model parameters, including parameters that control the geometry, for optimization. It also provides detailed control over solvers and contributions to an optimization problem defined by an Optimization interface. This study type requires an Optimization Module license.

ADVANCED STUDY EXTENSION STEPS

Batch and Batch Sweep

A Batch study creates a job that can be run without the graphical user interface and which stores the solution on disk. It generates a Batch (Job Configurations).

A Batch Sweep is used to formulate a sequence of problems that arise when you vary some parameter in the model. Each parameter tuple generates a batch job that runs the model with the given tuple. The results are stored on file and updated into the model. It generates a Batch (Job Configurations) and a Parametric Sweep (Job Configurations). A Batch Sweep is similar to a Parametric Sweep and is useful when you want to retrieve solutions for a parametric sweep during the solution process and when the problem formulation is such that the solution for each parameter is independent of the solution of all other parameters For example, it can be useful in the following situations where you may want to inspect the partial results during a solver sweep:

- You are basing your sweep on a table of input data and it turns out that obtaining a solution for some of those tabulated values takes an unexpectedly long time, but you do not know which values beforehand. You may still want to inspect the solution for as many parameters as possible to determine if you should terminate the solution process or start analyzing the results before the entire sweep is complete.
- You are using a mathematical expression for a certain material property or boundary condition that turns out to give nonphysical results for some parameters.
- You wrote an external function (in C, for example) to define a complicated material, but you did not make it foolproof for all input data and it returns bad output data for certain parameter values.
- You are running a parametric sweep where one of the parameters is a geometric dimension, but you accidentally defined too wide of a range of dimensions. By the time you realize this, the solution has already been running for a long time and you don't want to stop it.

If you use a batch sweep in any of these cases, each parameter can be solved for in a separate process that can be started and stopped independently. The results for the parameters that have already been solved for can be stored as an MPH-file for each parameter value, and you can open and review any number of them during the solution process.

Cluster Computing and Cluster Sweep

A Cluster Computing study is used to solve the problem on a distributed-memory computer architecture. It generates a Cluster Computing (Job Configurations) and a Batch (Job Configurations).

A Cluster Sweep is used to formulate a sequence of problems that arise when you vary some parameter in the model. The program computes the solution for each parameter on a distributed-memory computer architecture. The results are stored on file and updated into the model. It generates a Cluster Computing (Job Configurations), Batch (Job Configurations), and (if applicable) Parametric Sweep (Job Configurations).

Multigrid Level

A Multigrid Level node can be added as a subnode to other study step nodes to describe a geometric multigrid level used by the study.

Sensitivity

The Sensitivity study step specifies objective functions and controls variables with respect to which sensitivity is computed. Global scalar objective functions can be specified directly in the study step, and model parameters can

be selected as control variables. In addition, the study step provides control over the sensitivity solver method and contributions to the sensitivity problem defined with a Sensitivity or Optimization interface.

BATCH SWEEPS AND CLUSTER SWEEPS VS. DISTRIBUTED SWEEPS

Batch sweeps and cluster sweeps work in a different way than distributed sweeps. A distributed sweep runs different parameters in parallel within an MPI job (different processes compute different parameters). A Batch Sweep or Cluster Sweep starts several processes in parallel and runs them, and it then afterward collects the result into the main process. In most cases, a distributed sweep is easier to work with (select the **Distribute parametric sweep** check box and start in distributed mode). A Batch Sweep or Cluster Sweep requires that you set up a number of paths, but in cases where you want robustness and possibility for individual parameter restarts, a cluster sweep is preferred over a distributed parametric sweep. See also the following section.

BATCH SWEEPS VS. CLUSTER SWEEPS

In addition to a Parametric Sweep, you can also perform a Batch Sweep or a Cluster Sweep (see also the section above). The Batch Sweep is available for all COMSOL Multiphysics license types. If you have a floating network license, then you have access to an additional feature called Cluster Sweep. These two sweep types are similar, but the Cluster Sweep has additional settings for remote computations and cluster configurations. With a Cluster Sweep, you can distribute a large sweep on a (potentially large) cluster. The performance benefit of doing so can be very high because independent sweeps (sometimes called embarrassingly parallel computations) typically scale very well. If you master the batch sweep, then the step toward running a cluster sweep is not that big.

Combine Solutions

Use a **Combine Solutions** node ( ) to combine two solutions using concatenation or summation or to remove solutions:

- You can use *concatenation* to merge (concatenate) two time-dependent solutions that cover two disjunct time intervals so that it is possible to analyze and postprocess a combined solution over both time intervals.
- You can use *summation* (a plain or weighted summation) to sum a number of eigensolutions, for example, for further analysis.
- You can also *remove solutions* from a time-dependent solution, for example.

This node is also available in the solver configuration as a solver utility node. It then contains a **General** section, similar to the **Combine Solutions Settings** section below but with an additional **Defined by study step** list, which includes the **Combine Solutions** study steps and the **User defined** option for combining solutions at the solver level. By default, such **Combine Solution** nodes are generated from a corresponding **Combine Solution** node at the study level. At the solver level, there is also a **Log** section.

The **Settings** window contains the following section.

COMBINE SOLUTIONS SETTINGS

From the **Solution operation** list, choose **Concatenation** (the default), **Summation**, **Weighted summation**, or **Remove solutions**.

Concatenation

For a concatenation of two solutions, specify the two solutions from the **First solution** and **Second solution** lists. The lists contain all available solutions and **Solution Store** nodes (from this and other studies in the model), including **Current**, which is the default and is the output from the preceding study step. The first solution is the governing

solution, so that for an overlapped time interval between the two solutions, the set of solutions from the **First solution** is kept, and the set of solutions from the **Second solution** is ignored.

	The default for both solutions is **Current**, which is not a valid setting: the concatenation should be of two different time-dependent, parametric, or eigenvalue solutions, one of which may be the **Current** option. Stationary solutions cannot be combined.

Summation and Weighted Summation

For a summation of solutions, choose a time-dependent, parametric, or eigenvalue solution from the **Solution** list.

Additionally, for a weighted summation, choose a method for the weights from the **Weights method** list: **One expression**, to use a single expression, in the **Expression** field, to define the weights for all solutions, or **List of expressions**, to define a list of expressions in the table below. For the latter case, the **Indices** column contains the solution numbers to be summed up. Solution numbers that are not shown in the table will not be summed up. The expressions in the **List of expressions** column define how the weights are calculated. The status of the check boxes in the **Active** column determines whether the corresponding solution number is taken into account in the summation or not.

If you only want to use the combined solution for a weighted summation, select the **Clear source solution** check box.

Remove Solutions

If you choose **Remove solutions**, you can remove some solutions (such as some eigenmodes, parametric solutions, or time steps) from the input solution. From the **Exclude or Include** list, choose **Exclude** (the default) or **Include** to use the criteria for choosing solutions as the ones to exclude or include in the operation for removing solutions.

From the **Exclude method** or **Include method** list, choose **Explicit** (the default) or **Implicit** to use an explicit choice of solutions or an implicit choice using a Boolean expressions for the solutions to exclude or include.

For **Explicit**, choose **All**, **From list**, or **Manual** from the **Selection** list. For **From list**, choose solutions to exclude or include from the list. For **Manual**, enter solutions as indices (integers) in the **Index** field.

For **Implicit**, enter a Boolean expression in the **Exclude if** or **Include if** field. All solutions for which the expression evaluates to true are excluded or included.

If you only want to use the combined solution (a version of the input solution with some solutions removed), select the **Clear source solution** check box.

Study Reference

Use a **Study Reference** node ( ) to refer to another study in the model. The default name of the study reference node is the name of the study it refers to, such as **Study 2**.

You can use a **Study Reference** node to combine and nest several studies. Some examples:

- Running several studies from one study (here Study 1 runs Study 2, Study 3, and Study 4):

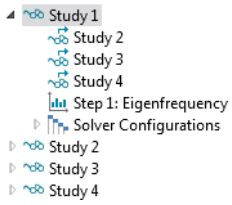

- Making a parametric sweep of another study (here the parametric sweep uses the study step in Study 2):

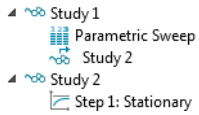

- Using another study as a precomputing step (here the Eigenfrequency study step in Study 1 runs as a precomputing step in Study 2):

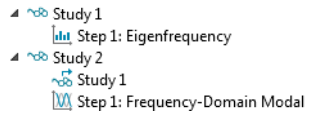

	If your license includes the Optimization Module, you can use **Study Reference** nodes to perform parameterized or nested optimization and to do derivative-free optimization where the objective and constraints are evaluated for different studies. See the *Optimization Module User's Guide* for more information.

The study reference node's **Settings** window includes the following section:

STUDY REFERENCE

From the **Study reference** list, select any available study in the model, except the one that contains the study reference node itself. The default setting, **None**, means that there is no reference to another study. Click the **Go to Source** button ( ) to move to the main **Study** node for the study that the study reference node refers to.

	The **Study Reference** node is a pointer to another **Study** and triggers the execution of the study the reference points to when it is the **Study Reference** node's turn in the study sequence. However, there are no **Compile Equations**, **Dependent Variables**, or solver nodes created in the solver sequence associated with the current study. You therefore need to specify initial values to subsequent nodes or solutions to input studies explicitly if they should refer to solutions referenced by a **Study Reference**. If the target of a study reference is changed, those settings need to be reset manually.

Model Reduction

Use a **Model Reduction** study node ( ) to create a reduced-order model (ROM) based on a time-dependent or frequency-domain simulation (see Reduced-Order Modeling). Reduced-order models are usually thought of as computationally inexpensive mathematical representations that provide the ability to run faster simulations using a small model that captures the behavior of the original model. Constructing the reduced-order models can be computationally expensive as it requires accumulating a large number of responses to input excitations (modes). The creation of a reduced-order model can typically be divided into two steps: production of training data and model building. The resulting model can then be used for repeated simulations. The output from the training study at the specified study step is used as the source for training data (for the modal solver this corresponds to eigenvectors).

	To add a **Model Reduction** node, first select **Reduced-Order Modeling** in the **Show More Options** dialog box.

There can only be one **Model Reduction** node in a study. When you copy a **Model Reduction** node, it is possible to paste it into another study without a **Model Reduction** node.

The following steps are the main steps needed to set up a model reduction study:

1. Select the model reduction method to apply.
2. If applicable, select the training data (select an existing study, or generate a study and study step reference).
3. Define the unreduced (source) model (a study and study step reference).
4. Select to create or update an instance of the reduced model under **Global Definitions>Reduced Models** for online use.
5. If applicable, specify if the reduced model should be capable of reconstruction.
6. For the Modal method only, define reduced model control inputs.
7. Define reduced model outputs (similar to multiple objective functions). For the AWE method this is also the objective function representing a quality measure to minimize.

Click the **Compute** button (=) (or press F8) at the top of the **Settings** window to produce an instance of the reduced model under **Global Definitions>Reduced Models**. When an instance has been created, you can also click the Update Solution button ( ).

The **Settings** window contains the following sections:

MODEL REDUCTION SETTINGS

In this section, you specify how to run the model reduction.

Reduced-Order Method

From the **Method** list, choose one of the following model-reduction methods:

- The **Modal** method (the default) supports inputs and outputs and makes it possible to export ROM matrices.
- The **AWE** (asymptotic waveform evaluation) method is an alternative reduced-order model that provides a fast-frequency sweep (an advanced interpolation) and supports outputs only.

Training Study (Modal Method Only)

From the **Training study** list, choose an existing study for the basis functions (training data) or choose **None**. The study must contain an eigenvalue solver.

From the **Defined by study step** list, choose **Automatic** (the default) to use the last applicable study step in the study, or select any of the applicable study steps (such as **Eigenvalue**).

From the **Compute** list, choose **Initially** (the default) to use the initially computed eigenvalue solution, or choose **Always** to always compute the eigenvalue solution. The default setting is computationally efficient but may not be valid if you have made changes to the model that affect the eigenvalue solution.

Unreduced Model Study

From the **Unreduced model study** list, choose the study that solves the unreduced model (for example, a time-dependent study). By default, the last enabled study step or study reference that is compatible with the selected method, if any, is used as the definition of the unreduced model.

From the **Defined by study step** list, select any of the applicable study steps (such as **Time Dependent**).

If you want to run a reduced model simulation, select the **Reduced model simulation** check box. For the **Modal** method, you can then also select a compatible unit from the **Time unit** list and enter a list of **Times** for the simulation. For the **AWE** method, you select a compatible unit from the **Frequency unit** list and enter a list of **Frequencies** for the simulation. The frequency range is used for the reduced-order model even if the simulation is turned off.

The **Create reduced model** check box is selected by default. From the **Reduced model** list, select an existing and compatible **Reduced Model** node (under **Global Definitions>Reduced Models**), or select **New** to create a new Reduced Model node. The reduced model simulation can be performed with the reduced model to produce a solution as an output from the study, possibly with a modified time or frequency list compared to the study step defining the unreduced model.

MODEL CONTROL INPUTS

In this section, you define the model control inputs. The **Model Control Inputs** table consists of three columns: **Reduced model input**, **Use**, and **Training expression**. The **Reduced model input** column shows all the variables defined in the **Global Reduced Model Inputs** node under **Global Definitions**. When the variable is added to the **Global Reduced Model Inputs** it is automatically added to the **Model Control Inputs** table. The **Use** column controls which of the defined variables that should be used. In the **Training expression** column, enter a training expression that is compatible with the training study step.

OUTPUTS

In the **Outputs** section, add outputs for the reduced-order model. You can add output variables by clicking the **Add Expression** (+) and **Replace Expression** ( ) buttons to search through a list of predefined expressions. If you do not add a name in the **Variable** column, the output is assigned a default variable name in the **Reduced Model** node. For the AWE method, you can also add a scaling factor for each output in the **Scale** column and select the check box (selected by default) in the **Use for adaptation** column to include it in a mesh adaptation.

RESULTS WHILE SOLVING

This section is available for model reduction in the frequency domain only (**AWE** selected from the **Method** list).

See Results While Solving in the Common Study Step Settings section. Also see Getting Results While Solving.

	Thermal Controller, Reduced Order Model: Application Library path **COMSOL_Multiphysics/Tutorials/thermal_controller_rom**.

Study and Study Step Types

To add a study or study step, see these topics:

- Creating a New Model
- The Add Study Window
- The Model Wizard

The main study step types — most of them available as a study in the **Add Study** window — are listed in Table 20-2. Some studies require add-on modules, and these are listed in Table 20-3 (in that list, the submenu under **Study Steps** in the **Study** branches appears in parentheses for the study types that are available as individual study steps).

Also see Study Extension Steps and Advanced Study Extension Steps for additional information about some study steps that do not generate equations and which can only be used in combination with other study steps. In Table 20-2, these are listed as supplemental studies and study steps.

TABLE 20-2: STANDARD STUDY TYPES, STUDY STEPS, AND STUDY EXTENSION STEPS

ICON	STUDY OR STUDY STEP	BRIEF DESCRIPTION
	Empty Study	An Empty Study creates a Study node with no study steps.
	General Studies	Studies that are generally available, such as Stationary and Time Dependent.
	Preset Studies/Preset Studies for Selected Physics Interfaces	If you have added a single physics interface, you find suggested studies under this node. If you have added multiple physics interfaces, you find studies applicable to all physics interfaces that you have added.
	More Studies	This branch contains study types for which the selected physics interfaces are not automatically adapted. Instead, these physics interfaces have to be adapted manually using the Model Builder.
	Preset Studies for Some Physics Interfaces	Under this node, studies applicable to all physics interfaces that you have chosen to solve for appear.
	Preset Studies for Selected Multiphysics	Under this node, studies applicable to the multiphysics couplings that you have chosen to solve for appear.
	Suggested by Some Physics Interfaces	Under this node (under Preset Studies for Selected Physics Interfaces), study types common to more than one physics interface appear if you have added more than two physics interfaces.
	Name of physics interface	Under a node with the name of a physics interface under Preset Studies for Selected Physics Interfaces, study types specific to that physics interface appears.
Stationary Studies and Study Steps		
	Stationary	For a stationary or steady-state situation where you can use a stationary solver. This study type is also used for optimization problems that are constrained with a stationary PDE. Adds a Stationary study step. You can also choose to create a parametric continuation solver.
Time-Dependent Studies and Study Steps		
	Time Dependent	For a time-dependent or transient simulation using a Time-Dependent Solver for computing the solution over time. This study type is also used for optimization problems that are constrained with a time-dependent PDE. Adds a Time Dependent study step.
	Time Discrete	Only available as a Time Dependent study step. Use it to perform time-dependent analysis using the projection method.

TABLE 20-2: STANDARD STUDY TYPES, STUDY STEPS, AND STUDY EXTENSION STEPS

ICON	STUDY OR STUDY STEP	BRIEF DESCRIPTION
	Frequency to Time FFT	This study step performs an FFT (or nonuniform Fourier transform) from the frequency domain (the input) to the time domain for a time-dependent study.
Eigenfrequency Studies and Study Steps		
	Eigenfrequency	This study is similar to an Eigenvalue study but computes the eigenfrequencies instead of the eigenvalues. Adds an Eigenfrequency study step.
	Eigenvalue	This study uses a formulation to compute eigenvalues and eigenmodes using an eigenvalue solver. Adds an Eigenvalue study step.
Frequency Domain Studies and Study Steps		
	Frequency Domain	For a study in the frequency domain such as wave equations or frequency response analysis. Adds a Frequency Domain study step.
	Frequency Domain Perturbation	Use this study step for studies of small oscillations about a bias solution. This study step follows a study step that computes the stationary (or bias) solution and computes a perturbed solution of the linearized problem around the linearization point (or bias point) computed in the first step.
	Time to Frequency FFT	This study step performs an FFT from the time domain (the input) to the frequency domain (output) for a frequency-domain study.
Study Extensions Steps		
	Batch	Use this step to start a COMSOL Multiphysics batch process that solves the current study on your computer.
	Batch Sweep	Use this step to find the solution to a sequence of stationary or time-dependent simulations that arise when you vary some parameters of interest.
	Cluster Computing	Use this step when you want to submit COMSOL Multiphysics batch jobs to a job scheduler that in turn runs the batch job on a second computer or cluster.
	Cluster Sweep	Use this step to find the solution to a sequence of stationary or time-dependent simulations that arise when you vary some parameters of interest.
	Combine Solutions	Use this step to combine two solutions; for example, two time-dependent simulations over two different time spans that you want to postprocess as a single time-dependent solution.
f(x)	Function Sweep	This is a special case of Parametric Sweep study step, where the solver sweeps over functions defined under a Switch node defined under Global Definitions>Functions.
	Material Sweep	This is a special case of Parametric Sweep, where the solver sweeps over materials defined under a Switch node defined under Materials.
	Model Reduction	Use this step to create a reduced-order model from a time-dependent or frequency-domain simulation.
	Multigrid Level	This can be added as a subnode to other study step nodes to describe a geometric multigrid level used by the study.
	Parametric Sweep	Use this step to find the solution to a sequence of stationary or time-dependent problems that arise when you vary some parameters of interest. Add to a study to perform a parametric variation on other studies.
	Sensitivity	Use this step to add a sensitivity analysis to the study. Using a Sensitivity study node you can add sensitivity functions at the study level and use model parameters as global control variables.
	Study Reference	Use this step to refer to another study in the model.

TABLE 20-3: STUDIES AND STUDY STEPS AVAILABLE WITH ADD-ON MODULES

ICON	STUDY OR STUDY STEP	DESCRIPTION	REQUIRED MODULE
Chemical Applications			
	AC Impedance, Initial Values	The AC Impedance Initial Values study is used for electrochemical impedance spectroscopy (EIS) computations in electrochemical cells. The study consists of a single Frequency Domain Perturbation study step, which solves for a harmonic linear perturbation.	Batteries & Fuel Cells Module, Corrosion Module, Electrochemistry Module, or Electrodeposition Module.
	AC Impedance, Stationary	Two study steps solve for a stationary problem and a harmonic perturbation in the frequency domain of the stationary solution.	Batteries & Fuel Cells Module, Corrosion Module, Electrochemistry Module, or Electrodeposition Module.
	AC Impedance, Time Dependent	Two study steps solve for a time-dependent problem and a harmonic perturbation in the frequency domain of the solution at the last time step.	Batteries & Fuel Cells Module, Corrosion Module, Electrochemistry Module, or Electrodeposition Module.
	Cyclic Voltammetry (under Time Dependent)	This study uses the Electroanalysis interface to perform transient simulations of voltammetry experiments.	Batteries & Fuel Cells Module, Corrosion Module, Electrochemistry Module, or Electrodeposition Module.
	Stationary Plug Flow (under Stationary)	This study is used for plug flow reactor models created with the Reaction Engineering interface. It is used to solve for the molar flow rate as a function of reactor volume.	Chemical Reaction Engineering Module
	Time-Dependent with Initialization	Use this study to perform transient simulations of electrochemical cells. It solves for the electrode and electrolyte potentials as well as all global ODE dependent variables. It also performs a transient simulation for all dependent variables in the model, using the result of the first study step as initial values.	Corrosion Module or Electrodeposition Module
	Time-Dependent, Fixed Geometry	Use this study to exclude geometry deformation effects from a model. The study is similar to the Time-Dependent with Initialization study.	Corrosion Module or Electrodeposition Module
Electrical and Optical Applications			
	Bidirectionally Coupled Particle Tracing	This study is used to model the interactions of particle or ray trajectories with stationary fields. The study creates a Time Dependent solver that solves for all degrees of freedom related to the particles or rays. All other degrees of freedom are computed using a Stationary solver. The two solvers are repeated using a For-End For loop so that a self-consistent solution is obtained, taking the bidirectional coupling between the moving particles or rays and stationary fields into account.	Particle Tracing Module

TABLE 20-3: STUDIES AND STUDY STEPS AVAILABLE WITH ADD-ON MODULES

ICON	STUDY OR STUDY STEP	DESCRIPTION	REQUIRED MODULE
	Bidirectionally Coupled Ray Tracing	This study is used to compute ray trajectories that are affected by external fields. This study solves for all degrees of freedom related to rays using a Time-Dependent solver. All other degrees of freedom are computed using a Stationary solver. The two solvers are repeated using a For-End For loop so that a self-consistent solution is obtained, taking the bidirectional coupling between the propagating rays and stationary fields into account.	Ray Optics Module
	Boundary Mode Analysis	Combines a mode analysis on a port (boundary) with a frequency domain study for the full geometry. Adds a Boundary Mode Analysis study step followed by a Frequency Domain study step.	RF Module or Wave Optics Module
	Coil Geometry Analysis	Use this study to solve an eigenvalue problem for the current flow in a Multi-Turn Coil Domain node that gives the current density likely produced by a bundle of conductive wires.	AC/DC Module
	Frequency-Stationary	This is a special case of a Stationary study and is available with the Induction Heating, Microwave Heating, and Laser Heating interfaces.	AC/DC Module, RF Module, or Wave Optics Module
	Frequency-Transient	Compute electromagnetic fields in the frequency domain and the temperature (or electron temperature) in the time domain. Available with the Induction Heating, Microwave Heating, Inductively Coupled Plasma, and Microwave Plasma interfaces.	AC/DC Module, Plasma Module, RF Module, or Wave Optics Module
	Mean Energies (under Frequency Domain)	Use this study to enter an array of values for the mean electron energy. Available with the Boltzmann Equation, Two-Term Approximation interface.	Plasma Module
	Ray Tracing	Computes the trajectories of rays. This is a special case of the Time Dependent study step. The time list can either be specified directly or by entering a list of lengths and a characteristic group velocity. Built-in stop conditions can be used to stop the solver when no active rays remain, or when the intensity of active rays is negligibly small.	Ray Optics Module or Acoustics Module
	Reduced Electric Fields (under Frequency Domain)	Use this study to sweep through a range of reduced electric fields. Available with the Boltzmann Equation, Two-Term Approximation interface.	Plasma Module
	Schrödinger-Poisson	Use this study for the self consistent solution to the Schrödinger-Poisson system.	Semiconductor Module
	Semiconductor Equilibrium	Use it to solve Poisson's equation for the case where the charge carriers are in thermal equilibrium.	Semiconductor Module
	Semiconductor Initialization	Use it to adaptively refine the mesh based upon the gradient of the impurity doping concentration.	Semiconductor Module

TABLE 20-3: STUDIES AND STUDY STEPS AVAILABLE WITH ADD-ON MODULES

ICON	STUDY OR STUDY STEP	DESCRIPTION	REQUIRED MODULE
	Frequency-Stationary, One-Way Coupled, Electromagnetic Heating	First solve a frequency-domain equation for electromagnetics and then use the electromagnetic heat source as a source term when solving a subsequent stationary heat transfer equation. Available with the Induction Heating, Microwave Heating, or Laser Heating interfaces.	AC/DC Module, RF Module, or Wave Optics Module
	Frequency-Transient, One-Way Coupled, Electromagnetic Heating	Sequentially compute electromagnetic fields in the frequency domain and then the temperature (or electron temperature) in the time domain. Available with the Induction Heating, Microwave Heating, and Laser Heating interfaces.	AC/DC Module, RF Module, or Wave Optics Module
	Stationary Source Sweep	A stationary source sweep to extract lumped matrices such as a capacity matrix in Electrostatics.	AC/DC Module
	TEM Boundary Mode Analysis	Combines a frequency domain analysis on port features (boundaries) with a frequency domain study for the full geometry. Adds a TEM Boundary Mode Analysis study step followed by a Frequency Domain study step.	RF Module
	Time Dependent, Modal	This study is for analyzing time-dependent wave problems using a modal solver. The Time Dependent, Modal study adds an Eigenfrequency study step followed by a Time Dependent, Modal study step.	RF Module, Acoustics Module, MEMS Module, Structural Mechanics Module, or Wave Optics Module.
	EEDF Initialization	The EEDF Initialization study is used to compute the electron energy distribution function (EEDF) without solving for the other plasma degrees of freedom. It can also be used to compute the initial EEDF for a time and space dependent plasma model.	Plasma Module
	Time Periodic	This study solves for the periodic steady-state solution in model using the Plasma, Time Periodic interface.	Plasma Module
	Time Periodic to Time Dependent	This study converts a time-periodic solution to a time-dependent solution in a model using the Plasma, Time Periodic interface.	Plasma Module
	Wavelength Domain	Use this study to compute the response of a linear or linearized model subjected to electromagnetic harmonic excitation for one or several wavelengths.	Wave Optics Module
Fluid Applications			
	Frozen Rotor	This is a special case of a Stationary study. The frozen rotor approach assumes that the flow in the rotating domain, expressed in the rotating coordinate system, is fully developed. Available with the Rotating Machinery, Laminar Flow, and Turbulent Flow interfaces.	CFD Module or Mixer Module
	Frozen Rotor with Initialization	For flow in rotating machinery where the topology of the geometry does not change with rotation. You can also use it to compute the initial conditions for time-dependent simulations of flow in rotating machinery.	CFD Module or Mixer Module

TABLE 20-3: STUDIES AND STUDY STEPS AVAILABLE WITH ADD-ON MODULES

ICON	STUDY OR STUDY STEP	DESCRIPTION	REQUIRED MODULE
	Stationary Free Surface	A study step added to a Frozen Rotor or Frozen Rotor with Initialization study to solve for the free surface deformation.	CFD Module
	Frozen Rotor with Stationary Free Surface	Two study steps, a Frozen Rotor solving for the fluid flow variables and a Stationary Free Surface one solving for the free surface deformation. Available with the Rotating Machinery, Laminar Flow, and Turbulent Flow interfaces.	CFD Module or Mixer Module
	Frozen Rotor with Initialization and Stationary Free Surface	Three study steps, a Wall Distance Initialization, followed by a Frozen Rotor solving for the fluid flow variables and a Stationary Free Surface one solving for the free surface deformation. Available with the Rotating Machinery, Turbulent Flow interfaces.	CFD Module or Mixer Module
	Stationary with Initialization	For stationary turbulent flow models that require an initialization.	CFD Module or Heat Transfer Module
	Time Dependent with Initialization	For time-dependent turbulent flow models that require an initialization.	CFD Module or Heat Transfer Module
	Thermal Perturbation, Eigenfrequency	For computing the oscillations around an equilibrium steady-state temperature field using: a Stationary study step followed by an Eigenfrequency study step.	Heat Transfer Module
	Thermal Perturbation, Frequency Domain	For computing the oscillations around an equilibrium steady-state temperature field using: a Stationary study step followed by a Frequency-Domain, Perturbation study step.	Heat Transfer Module
	Time Dependent with Phase Initialization	For time-dependent two-phase flow models that require an initialization of a level set function or phase field function.	CFD Module or Microfluidics Module
	Stationary, One-Way Coupled, NITF	Two stationary study steps, one solving for the fluid flow variables and one solving for the heat transfer variables. Available with the Nonisothermal Flow and the Conjugate Heat Transfer interfaces.	CFD Module or Heat Transfer Module
	Time Dependent, One-Way Coupled, NITF	Two time dependent study steps, one solving for the fluid flow variables and one solving for the heat transfer variables in the time domain. Available with the Nonisothermal Flow and the Conjugate Heat Transfer interfaces.	CFD Module or Heat Transfer Module
	Frozen Rotor, One-Way Coupled, NITF	Two frozen rotor study steps, one solving for the fluid flow variables and one solving for the heat transfer variables. Available with the Rotating Machinery, Nonisothermal Flow interfaces.	Mixer Module plus CFD Module
	Stationary, One-Way Coupled with Initialization, NITF	A wall distance initialization followed by two stationary study steps, one solving for the fluid flow variables and one solving for the heat transfer variables. Available with the Nonisothermal Flow and the Conjugate Heat Transfer interfaces.	CFD Module or Heat Transfer Module

TABLE 20-3: STUDIES AND STUDY STEPS AVAILABLE WITH ADD-ON MODULES

ICON	STUDY OR STUDY STEP	DESCRIPTION	REQUIRED MODULE
	Time Dependent, One-Way Coupled with Initialization, NITF	A wall distance initialization followed by two time dependent study steps, one solving for the fluid flow variables and one solving for the heat transfer variables in the time domain. Available with the Nonisothermal Flow and the Conjugate Heat Transfer interfaces.	CFD Module or Heat Transfer Module
	Frozen Rotor, One-Way Coupled with Initialization, NITF	Two frozen rotor study steps, one solving for the fluid flow variables and one solving for the heat transfer variables. Available with the Rotating Machinery, Nonisothermal Flow interfaces.	Mixer Module plus CFD Module
	Stationary, One-Way Coupled, MF	Two study steps, one solving for the fluid flow variables and one solving for the moisture transport variables. Available with the Moisture Flow interface.	Heat Transfer Module
	Time Dependent, One-Way Coupled, MF	Two study steps, one solving for the fluid flow variables and one solving for the moisture transport variables in the time domain. Available with the Moisture Flow interface.	Heat Transfer Module
Mechanical and Acoustic Applications			
	Bolt Pretension	This study step is a special case of a Stationary study step, where the special degrees of freedoms used for modeling prestressed bolts are solved for.	Structural Mechanics Module
	Fatigue	Use this study for fatigue evaluation. It processes a load cycle and evaluates a fatigue criterion specified in the Fatigue interface.	Structural Mechanics Module plus Fatigue Module
	Linear Buckling	Use this study for a structural model to solve for the critical load factor using an eigenvalue solver.	Structural Mechanics Module or MEMS Module
	Eigenfrequency, Prestressed	For computing eigenfrequencies that are influenced by a prior static load.	Structural Mechanics Module, Geomechanics Module, MEMS Module, or Acoustics Module
	Frequency Domain, Prestressed	For computing the response to harmonic loads fluctuating around a static preload.	
	Frequency Domain, Prestressed, Modal	Three study steps are used to compute the response to harmonic loads fluctuating around a prior static load. The solution is performed using mode superposition.	Structural Mechanics Module, Acoustics Module, or MEMS Module
	Random Vibration (PSD)	Adds three studies and a number of nodes under Global Definitions for a random vibration analysis.	Structural Mechanics Module or MEMS Module
	Response Spectrum	Adds a Response Spectrum node under Definitions and an Eigenfrequency study step for a response-spectrum analysis.	Structural Mechanics Module or MEMS Module
	Time Dependent, Prestressed, Modal	Three study steps are used to compute the response to time-dependent loads fluctuating around a prior static load. The solution is performed using mode superposition.	Structural Mechanics Module, Acoustics Module, or MEMS Module
	Stationary, One-Way Coupled	Two study steps solve for the fluid flow variables and for the solid deformation. Available with the Fluid-Structure Interaction interface.	MEMS Module or Structural Mechanics Module
	Time Dependent, One-Way Coupled	Two study steps solve for the fluid flow variables and for the solid deformation in the time domain. Available with the Fluid-Structure Interaction interface.	

TABLE 20-3: STUDIES AND STUDY STEPS AVAILABLE WITH ADD-ON MODULES

ICON	STUDY OR STUDY STEP	DESCRIPTION	REQUIRED MODULE
	Stationary, One-Way Coupled with Initialization	Three study steps solve for the distance to the closest wall, for the fluid flow variables, and for the solid deformation. Available with the Fluid-Structure Interaction interface.	MEMS Module or Structural Mechanics Module, plus the CFD Module
	Time Dependent, One-Way Coupled with Initialization	Three study steps solve for the distance to the closest wall, for the fluid flow variables, and for the solid deformation in the time domain. Available with the Fluid-Structure Interaction interface.	
	Time Dependent with FFT	Two study steps for computing a time-dependent solution using a Time Dependent study step and then applying a Time to Frequency FFT study step. Available with the Solid Rotor and Beam Rotor interfaces.	Rotordynamics Module
	Mapping	A dedicated study for the Background Fluid Flow Coupling multiphysics feature.	Acoustics Module
Multipurpose Applications			
	Adaptive Frequency Sweep	The Adaptive Frequency Sweep study is for analyzing the frequency response of a linear or linearized model subjected to harmonic excitation in the frequency domain using an AWE solver.	MEMS Module, RF Module, or Wave Optics Module
	Frequency Domain, Modal	The Frequency Domain, Modal study is for analyzing wave problems in the frequency domain using a modal solver. It adds an Eigenfrequency study step followed by a Frequency Domain, Modal study step.	Structural Mechanics Module, MEMS Module, Acoustics Module, RF Module, or Wave Optics Module
	Mode Analysis	Computes the modes for an acoustic or electromagnetic wave using an eigenvalue solver.	Acoustics Module, RF Module, or Wave Optics Module
	Modal Reduced-Order Model	You can add a Modal Reduced-Order Model study step to export the reduced-order model matrices for time-dependent wave problems using a modal solver. Available from the **Study** node under **Study Steps>Time dependent**.	Structural Mechanics Module, MEMS Module, Acoustics Module, RF Module, or Wave Optics Module
	Frequency Domain, AWE Reduced-Order Model	The Frequency Domain, AWE Reduced-Order Model is an entry point which creates studies and other features which facilitates the setup of reduced order model for frequency domain analysis using the AWE method.	Structural Mechanics Module, MEMS Module, Acoustics Module
	Frequency Domain, Modal Reduced-Order Model	The Frequency Domain, Modal Reduced-Order Model is an entry point which creates studies and other features which facilitates the setup of reduced order model for frequency domain analysis using mode superposition.	Structural Mechanics Module, MEMS Module, Acoustics Module
	Time Dependent, Modal Reduced-Order Model	The Time Dependent, Modal Reduced-Order Model is an entry point which creates studies and other features which facilitates the setup of reduced order model for time domain analysis using mode superposition.	Structural Mechanics Module, MEMS Module, Acoustics Module,

TABLE 20-3: STUDIES AND STUDY STEPS AVAILABLE WITH ADD-ON MODULES

ICON	STUDY OR STUDY STEP	DESCRIPTION	REQUIRED MODULE
	Optimization	Use this study to solve PDE-constrained optimization problems. This study step allows direct definition of objective functions and selection of model parameters, including parameters that control the geometry, for optimization. It also provides detailed control over solvers and contributions to an optimization problem defined by an Optimization interface.	Optimization Module
	Parameter Estimation	This study provides parameter estimation for time-dependent models.	Optimization Module
	Small-Signal Analysis, Frequency Domain	For perturbed frequency domain studies of small oscillation about a bias solution. The study creates two study steps that solve for a stationary problem and for a harmonic perturbation in the frequency domain of the stationary solution.	AC/DC Module, MEMS Module, or Semiconductor Module

Common Study Step Settings

The study steps form a solver configuration that computes the solutions for the study. The study step nodes' **Settings** windows contain the following sections (in addition to specific study settings for each type of study step):

THE STUDY STEPS SETTINGS WINDOWS' TOOLBAR

On top of the study steps **Settings** windows, a toolbar contains the following commands:

- Click **Compute** (=) or press F8 to compute the entire study.
- Click **Update Solution** ( ) or press F5 (when applicable) to update the current study. See Updating a Solution.

STUDY SETTINGS

Include Geometric Nonlinearity Check Box

If you have a license for the Acoustics Module, MEMS Module, or Structural Mechanics Module (including any add-on modules such as the Nonlinear Structural Materials Module) and your model involves structural mechanics, then the **Study Settings** section includes an **Include geometric nonlinearity** check box.

Select the **Include geometric nonlinearity** check box to enable a geometrically nonlinear analysis for the study step. Some physics designs force a geometrically nonlinear analysis, in which case it is not possible to clear the **Include geometric nonlinearity** check box. For further details, see the theory sections for the respective physics interface in the applicable modules' manuals.

STUDY EXTENSIONS

Reuse Solution from Previous Step List

This option is useful for parameters not handled with continuation. Select an option from the **Reuse solution from previous step** list.

- **No** (the default for a Stationary study) to reset the solution to the initial values before each step or continuation sweep. The initial values will not be recalculated by the parametric solver for subsequent parameter values. Parameter dependence of the initial values can be accomplished by using parametric sweep.

- **Yes** to always use the converged solution from the previous step, or the last solution from the previous continuation sweep (that is, never reset the solution).
- **Automatic** (the default for a Frequency Domain study) to normally use the converged solution from the previous step or sweep. However, when multiple parameters are used, the solution from the first step of each parameter list is always used for the first step of the next list.

The difference between the three options is shown in Figure 20-2 for a 3 x 4 two-parameter sweep using the different choices for **Reuse solution from previous step** without continuation:

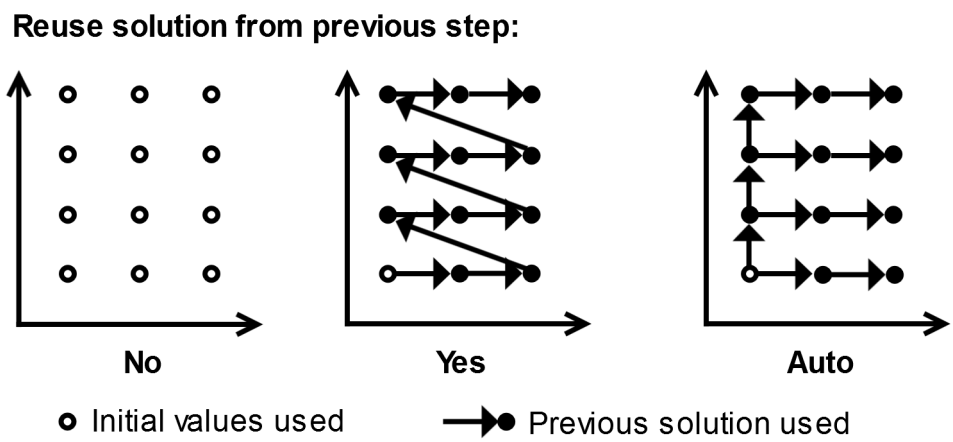

Figure 20-2: The difference between the three options for a two-parameter sweep without continuation.

When continuation is enabled by setting **Run continuation for** to one of the parameters, the converged solutions are always reused for the steps along the continuation sweep in this parameter. The setting for **Reuse solution from previous step** then determines how the solutions are reused between multiple continuation sweeps, if there are additional parameters to sweep over, as shown in Figure 20-3.

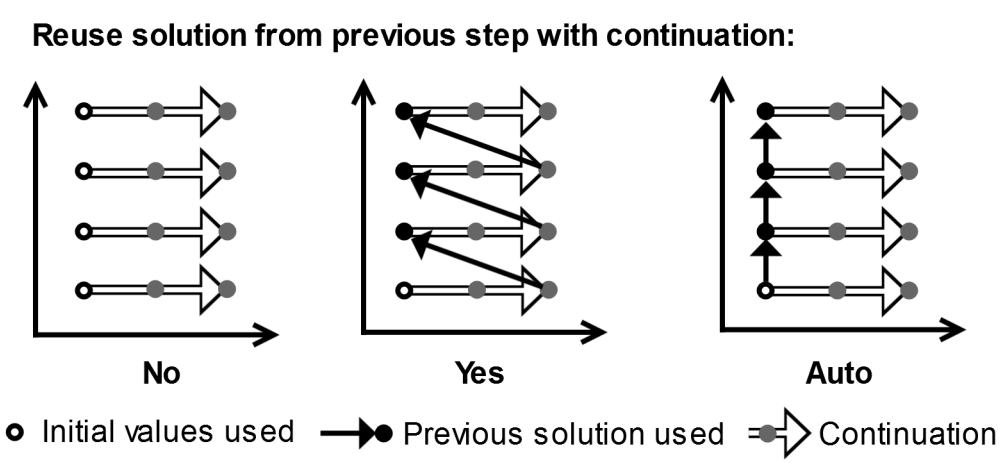

Figure 20-3: The difference between the three options for a two-parameter sweep with continuation.

For the Frequency Domain study, the auxiliary sweep is merged with the frequency sweep into a multiparameter sweep with the frequency as the parameter at the innermost level.

See About the Parametric Solver for more information.

RESULTS WHILE SOLVING

Select the **Plot** check box to allow plotting of results while solving in the **Graphics** window. Then select what to plot from the **Plot group** list and, for time-dependent simulations, at which time steps to update the plot: the output times or the time steps taken by the solver. The software plots the dataset of the selected plot group as soon as the results become available. You can also control which probes to tabulate and plot the values from. The default is to tabulate and plot the values from all probes in the **Table** window and a **Probe Plot** window.

Use the **Probes** list to select any probes to evaluate. The default is **All**, which selects all probes for plotting and tabulation of probe data. Select **Manual** to open a list with all available probes. Use the **Move Up** ( ), **Move Down** ( ), **Delete** ( ), and **Add** ( ) buttons to make the list contain the probes that you want to see results from while solving. Select **None** to not include any probe.

	You can use probes to tabulate values of interest during a large parametric simulation, for example. It can then be possible to keep only the last solution in memory during the parametric sweep, which potentially can significantly reduce memory requirements and the simulation time.

PHYSICS AND VARIABLES SELECTION

See Physics and Variables Selection for detailed information about this section. You can control and specify different cases where the physics interface to solve for is varied, or, for various analysis cases, which variables and physics features (for example, boundary conditions and sources) to use. The default is to solve for all physics interfaces that are compatible with the study type.

VALUES OF DEPENDENT VARIABLES

When you have physics interfaces in a study step that you do not solve for but that provide degrees of freedom, you can specify how the COMSOL Multiphysics software handles the values of such degrees of freedom (dependent variables).

The settings in this section determine how the solver handles dependent variables that you do not solve for. This is applicable in, for example, a solver configuration where you only solve for a subset of the dependent variables in each step. You can also specify the initial values of variables that you do solve for.

By default, the COMSOL Multiphysics software determines these values heuristically depending on the physics as, for example, the specified initial values or a solution from an earlier study step. Under **Initial values of variables solved for**, the default value of the **Settings** list is **Physics controlled**. To specify the initial values of the dependent variables that you solve for, select **User controlled** from the **Settings** list.

	The **Initial values of variables solved for** settings have no effect when using the eigenvalue solver.

Similarly, to specify the values of dependent variables that you do not solve for, select **User controlled** from the **Settings** list under **Values of variables not solved for**.

Then use the **Method** list to specify how to compute the initial values of variables solved for and the values of variables not solved for. Select:

- **Initial expression** to use the expressions specified on the **Initial Values** nodes for the physics interface in the model.
- **Solution** to use initial values as specified by a solution object (a solution from a study step).

Use the **Study** list to specify what study to use if **Method** has been set to **Solution**:

- Select **Zero solution** to initialize all variables to zero.
- Select any other available study to use it as an initial value.

Depending on the study type of the solution that you selected, you can choose different solutions from a list underneath the **Study** list:

- For a Stationary study, from the **Selection** list, select **Automatic** (the default) to use the last (typically the only) solution, select **First** to use the first (typically the only) solution, select **Last** to use the last (typically the only) solution, select **All** to use all (typically just one) solutions from that study, select **Manual** to use a specific solution number that you specify, or select **1** to use the first (typically the only) solution. If you use a parametric continuation of the stationary study, there can be additional solutions to choose from.
- For a Time Dependent study, from the **Time** list, select **Automatic** (the default) to use the solution for the last time, select **First** to use the first solution, select **Last** to use the last solution, select **All** to use all solutions from that study, select **Interpolated** to specify a time in the text field that opens and use the interpolated solution at that time, select **Manual** to use a specific solution number that you specify, or select one of the output times to use the solution at that time. For all the options in the **Time** list (except **All**), one solution is used throughout the whole simulation. This solution is computed once before the simulation. When you select **All**, an interpolation is done internally for time-dependent simulations.
- For an Eigenvalue study, from the **Selection** list, select **Automatic** (the default) to use the first eigenvalue and its associated eigensolution, select **First** to use the first solution, select **Last** to use the last solution, select **All** to use all solutions from that study, select **Manual** to use a specific solution number that you specify, or select one of the eigenvalues to use the corresponding eigensolution.
- For a parametric or Frequency Domain study, from the **Parameter value** list, select **Automatic** (the default) to use the first parameter value set or frequency, select **First** to use the first solution, select **Last** to use the last solution, select **All** to use all solutions from that study, select **Manual** to use a specific solution number that you specify, or select one of the parameter value sets or frequencies to use the corresponding solution.

The **All** option is not available from the list under **Initial values of variables solved for**.

Under **Store fields in output**, you can specify to store the field variables that you solve only for some part of the geometry (a boundary, for example, if the solution in the domain is not of interest). You define the parts of the geometry for which to store the fields as selection nodes. From the **Settings** list, choose **All** (the default) to store all fields in all parts of the geometry where they are defined, or choose For selections to choose one or more selections that you add to the list. Click the **Add** button (+) to open an **Add** dialog box that contains all available selections. Select the selections that you want to add and then click **OK**. You can also delete selections from the list using the **Delete** button ( ) and move them using the **Move Up** (↑) and **Move Down** (↓) buttons. See also the Field node, where you can also control what to store in the output, if the corresponding Dependent Variables uses user-defined settings.

MESH SELECTION

Specify — for each geometry — which mesh to use for the study step. For each geometry listed in the **Geometry** column, select a mesh from the list of meshes in the **Mesh** column. Each list of meshes contains the meshes defined for the geometry that you find on the same row.

ADAPTATION AND ERROR ESTIMATES

These are settings for mesh adaptation and error estimates, available for stationary, eigenfrequency, eigenvalue, and frequency-domain study steps. Depending on the type of adaptation, meshing sequences for the adaptive mesh

refinements, using **Adapt** or **Size Expression** nodes, and corresponding solutions are created for inspection and possible modification. Error estimates are available as variables for postprocessing (for example, `freq.errtot` for the total error estimate in a Frequency Domain study). The adaptive mesh refinement solutions become available in a separate **Solution** dataset (**Study 1/Adaptive Mesh Refinement Solutions 1**, for example). When using that dataset for postprocessing, you can choose to use any of the available adaptive mesh refinement solutions from a **Parameter selection (Refinement level)** list.

From the **Adaptation and error estimates** list, select **Error estimates** if you want to use error estimation and select **Adaptation and error estimates** if you want to use adaptive mesh refinement. In the latter case, error estimates that are used in the adaptation algorithm are also available for postprocessing. Choose **None** for no adaptation or error estimation.

- The Adaptive Mesh Refinement Solver
- Error Estimation — Theory and Variables
- Adapt — the **Adapt** node in a mesh sequence also provides mesh adaptation. It includes a selection of geometric entities, which can be useful if you want to limit the mesh adaptation to certain geometric entities (some but not all domains, for example).

The software performs adaptive mesh refinement in one geometry only. Use the **Adaptation in geometry** list to specify that geometry. If you do not want to perform the mesh adaptation in the entire geometry, use the settings in the **Geometric Entity Selection for Adaption** section below.

Use the **Error estimate** list to control how the error estimate is computed:

- Select **L2 norm of error squared** to use the squared L2 norm of the error. This is the only option for Eigenvalue studies. Use the **Scaling factor** field to enter a space-separated list of scaling factors, one for each field variable (default: 1). The error estimate for each field variable is divided by this factor. Also, the L_2 norm error estimate is based on a stability estimate for the PDE. Use the **Stability estimate derivative order** field to specify its order (default: 2).
- Select **Functional** and specify a **Functional type**. Available functional types are **Predefined** and **Manual**. This option adapts the mesh toward improved accuracy in the expression for the functional. Select **Manual** to specify a globally available scalar-valued expression in the Functional field. If you select **Predefined**, you can choose a **Solution functional** (**Functional** when doing error estimation) from the following list:
  - **Integral**
  - **L2 norm**
  - **L1 norm**
  - **Approximate max norm**
- Select **Error indicator** to specify an error indicator using an error expression, which you add to the **Error expression** table below using the **Add** (+) button. The error expression can be any expression, including field variables and their derivatives, defined in the domain. Select the **Active** check box for the error expressions that should be part of the error indicator. Use the **Move Up** (↑), **Move Down** (↓), and **Delete** ( ) buttons as needed to rearrange and remove error expressions.

By default, the software automatically determines the order of decrease in equation residuals on basis of the shape function orders in the geometry. To specify a residual order manually, select the **Residual order** check box and specify a nonnegative integer in the accompanying field (available when **Error estimate** is **L2 norm of error squared** or **Functional**).

From the **Solution selection** list, select which solution that should be used to evaluate error estimates:

- Select **Use last** (the default for all study types except Eigenvalue) to use the last solution.
- Select **Use first** to use the first solution.
- Select **All** (the default for Eigenvalue studies) to use all solutions from that study.
- Select **Manual** to use a specific solution number that you specify as solution indices in the **Indices** field.

In the **Weights** field (only available when **Solution selection** is **Manual** or **All**), enter weights as a space-separated list of positive (relative) weights so that the error estimate is a weighted sum of the error estimates for the various solutions (eigenmodes). The default value of 1, which means that all the weight is put on the first solution (eigenmode). That is, any omitted weight components are treated as zero weight.

From the **Adjoint solution error estimate** list (only available when **Error estimate** is **Functional**), select an error estimate method in the adjoint solution: a recovery technique or a gradient-based method. Select **PPR for Lagrange** (the default) to enforce using the recovery technique when possible, and select **Gradient based** to use the gradient-based method.

The **Save solution on every adapted mesh** check box is selected per default. Clear this check box if you do not want to save solution on every adapted mesh. In that case, the last two solutions are saved (the finest one and the second finest).

Under **Mesh adaptation**, the following settings are available.

Use the **Adaptation method** list to control how to adaptively refine mesh elements. Select one of these methods:

- **General modification**, to use the current mesh as a starting point and modify it by refinements, coarsening, topology modification, and point smoothing. Use the **Allow coarsening** check box to control if mesh coarsening is used. If the mesh contains anisotropic elements (for example, a boundary layer mesh), it is best to disable mesh coarsening to preserve the anisotropic structure. If you have selected to allow coarsening, specify the **Maximum coarsening factor** (a value of 5 by default) to scale the refined mesh size in the regions where refinement is not needed
- **Rebuild mesh**, to set up a size expression describing the error and rebuild the meshing sequence using the size expression as input. Note that structured meshes, such as mapped and swept meshes, in general are not appropriately refined. This method is not supported on imported meshes. The size of the refined mesh is the minimum of the size of the original mesh (previous refined mesh) and the size defined by the refinement. Specify the **Maximum coarsening factor** (a value of 3 by default) to scale the refined mesh size in the regions where refinement is not needed.
- **Regular refinement**, to make the solver refine elements in a regular pattern by bisecting all edges of an element that needs refinement.
- **Longest edge refinement**, to make the solver refine only the longest edge of an element by recursively bisecting the longest edge of edge elements that need refinement. This method is less suitable for models with nonsimplex elements. This is the default method.

For all adaptation methods except **Rebuild mesh**, you can specify the maximum number of refinements of the mesh elements (default: 5) in the **Maximum number of refinements** field.

Use the **Element selection** list to specify how the solver should select which elements to refine. Select:

- **Rough global minimum** to minimize the error by refining a fraction of the elements with the largest error in such a way that the total number of elements increases roughly by the factor specified in the accompanying **Element count growth factor** field. The default value is 1.7, which means that number of elements increases by about 70%.

- **Fraction of worst error** to refine elements whose local error indicator is larger than a given fraction of the largest local error indicator. Use the accompanying **Element fraction** field to specify the fraction. The default value is 0.5, which means that the fraction contains the elements with more than 50% of the largest local error.
- **Fraction of elements** to refine a given fraction of the elements. Use the accompanying **Element fraction** field to specify the fraction. The default value is 0.5, which means that the solver refines about 50% of the elements.

Use the **Maximum number of elements** field to specify the maximum number of elements in the refined mesh. If the number of elements exceeds this number, the solver stops even if it has not reached the number specified in the **Maximum number of adaptations** field. The default value is 10,000,000 (ten million) elements.

With the settings in the **Goal-oriented termination** list you or the physics interfaces can add a number of global goal-oriented quantities so that the mesh adaptation will terminate when these are stable to a requested accuracy instead of after a fixed number of adaptation iterations. Choose **Off** (the default), **Auto**, or **Manual** to control. You, when the list is set to **Manual**, or the physics, when the list is set to **Auto**, can add a number of global goal-oriented quantities, and the mesh adaptation will terminate when these are stable to a requested accuracy. These goal-oriented quantities could, for example, for an RF simulation be the S-parameters or another quantity of interest. The goal-oriented termination can be used with any of the available error estimation methods. When the **Goal-oriented termination** list is set to **Manual**, you can add goal-oriented terminal expressions in the table at the bottom of this section. Click the **Add** button (+) to add an expression (default: 1) that you can edit in the **Goal-oriented termination expression** column. If desired, adjust the tolerance (default: 0.01) in the **Tolerance** column, and the type of tolerance in the **Tolerance type** column: **Relative** (the default) or **Absolute**. Use the **Active** buttons to manage which goal-oriented termination expressions to include. The mesh adaptation will run until the relative changes for all expressions (applied individually for all expressions) go below their respective thresholds, unless the maximum number of adaptations limit is met, in which case the algorithm terminates with a warning.

Use the **Maximum number of adaptations** field to specify the maximum number of adaptive mesh refinement iterations. The default value is 5 in 1D, 2 in 2D, and 1 in 3D. With the **Goal-oriented termination** set to **Auto**, the default value is set to 20 in 1D, 15 in 2D, and 10 in 3D.

With the **Goal-oriented termination** set to **Auto** or **Manual**, you can control the display of convergence from the adaptation when the **Output goal-oriented termination increments** check box is selected. It is possible to choose the plot window to display the convergence as well as the table to be used by the plot from the **Plot window** — select **New window** (the default) or **Graphics** — and **Output table** lists, respectively. If you choose **New** from the **Output table** list, two new tables are created, one for the adaptation convergence plot and one for providing verbose information.

Also choose the level of detail for the log from the **Goal-oriented termination log** list: **Minimal**, **Normal** (the default), or **Detailed**. Choose **Detailed** if you want to include the evaluations for all the parameters, frequencies, or eigenvalues in the log.

GEOMETRIC ENTITY SELECTION FOR ADAPTATION

From the **Geometric entity level** list, choose the geometric entity on which you want to do adaptive mesh refinement: **Entire geometry** (the default), **Domain**, **Boundary**, or **Edge** (3D only). For example, selecting **Boundary** can be useful if the model includes a physics interface defined on boundaries (surfaces) and you want to base the adaptation on that physics interface. For all levels except **Entire geometry**, make a selection of the geometric entities to include using the **Selection** list and selection tools below.

STUDY EXTENSIONS

These are extensions to the study's main solver, such as adaptive mesh refinement and automatic remeshing. The options vary depending on the study type.

Auxiliary Sweep

Select the **Auxiliary sweep** check box to enable an auxiliary parameter sweep, which corresponds to a Parametric solver attribute node. For each set of parameter values, the chosen **Sweep type** is solved for. This is available for Stationary, Time Dependent, and Frequency Domain studies.

Select a **Sweep type** to specify the type of sweep to perform:

- **Specified combinations** (the default) solves for a number of given combinations of values as given for each parameter in the list. The parameter lists are combined in the order given, that is, the first combination contains the first value in each list, the second combination contains all second values, and so on.
- **All combinations** solves for all combinations of values; that is, all values for each parameter are combined with all values for the other parameters. Using all combinations can lead to a very large number of solutions (equal to the product of the lengths of the parameter lists).

In the table, specify the **Parameter name**, **Parameter value list**, and (optional) **Parameter unit** for the parametric solver. Click the **Add** button ( ) to add a row to the table. When you click in the **Parameter value list** column to define the parameter values, click the **Range** button ( ) to define a range of parameter values. The parameter unit overrides the unit of the global parameter. If no parameter unit is given, parameter values without explicit dimensions are considered dimensionless.

	If you choose **Specified combinations**, the list of values must have equal length.

An alternative to specifying parameter names and values directly in the table is to specify them in a text file. Use the **Load from File** button ( ) to browse to such a text file. The read names and values are appended to the current table. The format of the text file must be such that the parameter names appear in the first column and the values for each parameter appear row-wise with a space separating the name and values and a space separating the values.

Click the **Save to File** button ( ) to save the contents of the table to a text file (or to a Microsoft Excel Workbook spreadsheet if the license includes LiveLink™ *for* Excel®).

	Loading and saving the parameter table data using Excel include the units in the **Parameter unit** column. The unit column is ignored when saving and loading parameter data to *.txt, *.csv, and *.dat files.

For a Stationary or Frequency Domain study, select an option from the **Run continuation for** list: **No parameter** or one of the parameters given in the list.

	• Physics and Variables Selection • Individual study and study steps are listed in Table 20-2 and Table 20-3.

Using a Solution From Previous Study Steps

It is sometimes useful to run one simulation for one aspect of a model and then use the output of the first simulation as input into a second simulation, covering a different aspect. You can perform such a sequential study using multiple study steps in a single study or using multiple studies in the same model:

- Use two or more study steps in a sequence in the same study if you, for example, want to use a stationary or eigenvalue solution as the initial value for a time-dependent solution. You then add an **Eigenvalue** or **Stationary** study step node followed by a **Time Dependent** study step node. By default, the COMSOL software determines

the values of the dependent variables in the fields for the physics heuristically depending on the model, so normally you do not have to take specific action. To specify the initial values of the dependent variables that you solve for, select the **Initial values of variables solved for** check box in the **Values of Dependent Variables** section. Then use the **Method** list to specify how to compute the initial values. Choose **Solution** and then select the solution to the stationary or eigenvalue problem solved using the previous study step. Doing so can be useful to specify a specific eigensolution to use as the initial value, for example.

Another case is when you want to solve for two different physics interfaces, one at the time, but use the solution from the first study as input data for the physics interface in the second study. You then select the physics interface to solve for and the physics interface to disable in the solver under **Physics and Variables Selection** in the **Settings** windows for each study step. Typically you solve for one physics interface (or set of physics) in the first study step and for the other physics interface in the other study step (you can also use two separate studies). To specify the values of dependent variables that you do not solve for, select the **Values of variables not solved for** check box in the **Values of Dependent Variable**s section. Then use the **Method** list to specify how to compute the values of variables not solved for. Choose **Solution** and then select the study step and solution to use.

When a model modification is required in between the simulations, you can use two study steps where you use the setting available when you select the **Modify model configuration for study step** check box to control what physics interface the study step solves (see Modifying the Model Configuration); for example, if you want to change a boundary condition or expressions for the initial value. You then create two such nodes as separate analysis cases and use one in the first study step and the other in the second study step.

- An example when it is more practical to work with separate studies is when a study is inherently a multistep study, such as buckling in structural mechanics or modal analysis. Extending such studies with extra study steps normally becomes unnecessarily complex. A third example is when doing optimization, where the problem without optimization often needs to be solved and tested separately from a study with optimization enabled.

See Values of Dependent Variables above for details about the settings for controlling the values of the dependent variables that you solve for or exclude from the solvers. Also see Physics and Variables Selection below for information about controlling which physics interface to solve for.

Physics and Variables Selection

All study step **Settings** windows contain a **Physics and Variables Selection** section, which you can use to control which physics interfaces (or even specific variables and physics nodes) to solve for. This can be useful for:

- Solving physics in a sequence, including different physics features in each step.
- Solving and comparing different "analysis cases" for a model (sharing the same geometry and material) by varying boundary conditions, sources, or variables without the need to enable and disable nodes in the physics interface and recompute the solution.

By default, you can select from the participating physics interfaces and moving frames. To select individual physics nodes and variables and other model settings, select the **Modify model configuration for study step** check box (see Modifying the Model Configuration below).

SELECTING PHYSICS INTERFACES TO SOLVE FOR

The **Physics interface** column contains the names of all true physics interfaces in the model. Some special auxiliary interfaces, notably **Optimization** and **Sensitivity**, are not shown when their dependent variables are controlled in other ways. The **Moving Mesh** interface itself is also excluded, but instead there is a special entry with the same name for controlling the mesh motion in each component. This entry appears in the list as soon as you add features under **Definitions>Moving Mesh**, or if your model contains any interface controlling the spatial frame, and the spatial frame uses dependent variables.

You can choose to not solve for one or more of the physics interfaces or the spatial frame by clicking the button in the **Solve for** column (by default, a study solves for all physics interfaces). Those physics interfaces are then not solved for but can still provide values for the degrees of freedom (dependent variables) according to the settings for values of variables not solved for (see Values of Dependent Variables). Click the button (when the physics is deactivated) again to solve for the physics interface.

In the **Discretization** list you can specify which discretization to use. The default (and often the only) choice is **Physics settings**, which means that the study uses the discretization from the main physics interface node's settings. Changing it affects the discretization order used by this study. To add another discretization, use a separate **Discretization** node in the physics interface. The leftmost column is usually empty but contains a warning ( ) if the physics' degrees of freedom are not solved for regardless of the setting in the **Solve for** column. This can be the case if the physics interface is not compatible with the study step.

The **Multiphysics couplings** column contains the names of all multiphysics couplings in the model. You can choose to not solve for one or more of the multiphysics couplings by clicking the button in the **Solve for** column (by default, a study solves for all physics interfaces). If you clear the **Solve for** button, any equations and dependent variables that the multiphysics coupling adds are not included, but the multiphysics coupling still affects the definition of variables.

REDUCED MODELS AND RECONSTRUCTION

If the model contains a **Model Reduction** study, there is also a **Reduced model** column, where the **Reduced Model** node that contains the reduced model appears. Select the **Store output dependent variables** check box to store the output from the reduced model as dependent variables for postprocessing. This option is available if you have selected the **Add output dependent variables** check box in the **Reduced Model** node's settings.

If reconstruction is included in the model reduction, you can choose a compatible reduced model to use for reconstruction under **Reduced model** for the physics interface that is to be reconstructed under **Reconstruction**. This section is only available if the physics interface is not being solved for (the **Solve for** check box is cleared in the **Physics interface** section above). By default, this reduced model applies to all fields and states in the physics interface. If desired, it is possible to use different reconstruction for different fields and states by choosing another **Reduced Model** node in the **Field** and **State** nodes.

- The Add Physics Window
- The Add Multiphysics Window
- The Add Study Window
- Model Reduction

MODIFYING THE MODEL CONFIGURATION

If the **Modify model configuration for study step** check box is selected, you can modify the model configuration by specifying which variables and physics features to include in the model that you solve. You can also control **Perfectly Matched Layers, Infinite Element Domain**, and other features under **Component>Definitions** as well as specifying which physics that manages which frame. The **Physics and Variables Selection** section then contains a tree that is a copy that include the following parts of the model tree in the Model Builder (see Figure 20-4):

- **Variables** nodes under **Global Definitions**.
- **Variables** nodes under **Component>Definitions** for all **Component** branches.
- **Perfectly Matched Layer**, **Infinite Element Domain**, and **Scaling System** nodes under **Component>Definitions** for all **Component** branches.
- Moving mesh nodes under **Component>Definitions>Moving Mesh** for all **Component** branches.
- All physics nodes and multiphysics coupling nodes in the **Component** branches.

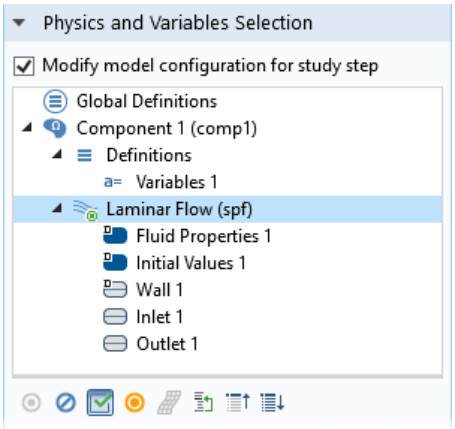

Figure 20-4: An example of a Physics and Variables Selection section tree when the Modify model configuration for study step check box is selected.

It is possible to include or exclude all variables, physics interfaces, and physics nodes in a study step (that are not disabled in the model tree). Select one or more nodes in the tree and right-click or use the buttons at the bottom of the section (below the tree) to change their status. Click the **Go to Source** button ( ) to move to the corresponding original node in the model tree. Click the **Collapse All** ( ) and **Expand All** ( ) buttons if desired to completely collapse or expand the physics tree. The following additional options are available:

Disabling and Enabling Physics Feature and Variables Selection Nodes

Click **Disable** (or right-click to select from the context menu) to disable enabled nodes that are possible to disable. The contributions, conditions, or variables in a node that you disable are not included in the study when solving. You can also disable selected nodes by clicking the **Disable** button ( ) underneath the tree. A disabled node is unavailable in the tree. You can also right-click any applicable node in the model tree to select **Disable in all studies**. That node is then disabled for all studies.

Click **Enable** (or right-click to select from the context menu) to enable disabled nodes. The contributions, conditions, or variables in a node that you enable are included in the study when solving. You can also enable selected nodes by clicking the **Enable** button ( ) underneath the tree.

When you right-click, the following context menu options mean that a node cannot be enabled or disabled:

- **Cannot be Disabled** — for default nodes in the physics interfaces.
- **Disabled in Model Builder** — for nodes that you have disabled in the Model Builder.
- **Not Applicable** — for physics nodes that are not applicable for the study type in the study step. The item in the tree is not available.

When solving, equations and variables are generated as if the disabled nodes in the tree were disabled in the Model Builder. This means that the nodes' selections override each other as if the nodes were disabled in the Model Builder.

Change of States and Override and Contribution Indicators

An asterisk displays in the upper-right corner of nodes for which the state has been changed in the study step's selection tree compared to the state in the Model Builder. In this example, under the **Physics and Variables Selection** section, a Transport in Diluted Species interface ( ) is disabled (unavailable), provides no degrees of freedom (red dot in the lower-right corner), and has a change of state indicated by the asterisk. The asterisk means the Laminar Flow interface in the Model Builder is not disabled. Also see Figure 20-4 for another example. In general, any variable or physics node in the Model Builder that is disabled in any study step gets an asterisk in the upper-right

corner. For physics interfaces, this applies also when you have not selected the **Modify model configuration for study step** check box and the physics interface is disabled in the **Solve for** column in the **Physics and Variables Selection** section.

The dynamic visual icon indicators for overridden and contributing nodes also appear in the tree in the **Settings** window for the study steps when you have selected the **Modify model configuration for study step** check box in a study step's **Settings** window. When you select a physics node in the tree, the override and contribution icon indicators appear in the same way as in the Model Builder when you select a physics node, but if you disable any physics node in the study step's tree, the icon indicators then show how the physics node overrides and contributes to the model when one of more physics nodes are disabled in the study step.

- Physics Exclusive and Contributing Node Types
- Physics Node Status

Options and States for the Physics Nodes

The following options are available for the main physics nodes under the **Physics and Variables Selection** tree. Right-click a node and select one of the following from the context menu or click the button beneath the tree (see Figure 20-4). Selecting these options affects the entire physics interface. Select:

- **Solve For** (the default setting) to solve for the physics interface, including all enabled physics nodes and the contributions, constraints, and variables that are added. This is similar to the button when you specify what physics interfaces to solve for without the selection tree.

  A physics interface in this state shows a small green circle in its lower-right corner to indicate that the study step solves for the degrees of freedom (dependent variables) in the physics interface and features. This is an example of a Laminar Flow interface with the green dot ( ).
- **Disable in Solvers** to not solve for the physics interface but provide degrees of freedom (dependent variables) and other physics node variables using the settings for values of variables not solved for (see Values of Dependent Variables).

  A physics node in this state shows a small yellow square in its lower-right corner to indicate that the study step provides degrees of freedom but does not solve for the physics interface or feature nodes. In this example, a Laminar Flow interface is both showing that it provides degrees of freedom (yellow dot in the lower-right corner) and has a change of state indicated by the asterisk ( ).
- **Disable in Model** to fully disable a physics interface or node in the model. The physics interface or node does not contribute to the study and no variables, including the degrees of freedom (dependent variables), are included.

  A disabled physics interface or node is unavailable and shows a small red square in its lower-right corner to indicate that the study step provides no degrees of freedom for it. In this example, a Transport of Diluted Species interface ( ) is disabled (unavailable), provides no degrees of freedom (red dot in the lower right corner), and has a change of state indicated by the asterisk.

In addition, the physics node can be in the following states:

- If the physics interface or node is disabled in the Model Builder, it is unavailable and shows a small red icon in its lower-right corner. If you right-click it, the context menu contains **Disabled in Model Builder**. In this case, none of the options above are available.
- If the physics interface or node is not applicable because it does not support the study step, then by default it has the **Disable in Solvers** setting, and you can also choose **Disable in Model**. **Solve For** is not available.

Frame Control for Mesh Deformation

Multiple physics interfaces controlling the same frame are not allowed on the same selection. It is, however,. possible to use multiple frame-controlling physics with overlapping selection, but you then have to explicitly disable frame control on all but one of the physics. You can choose different physics to control the frame in different study steps. In the physics tree, frame-controlling interfaces have the label **Controls spatial frame** or **Controls material frame**. Toggle the frame control on those physics interfaces by selecting them in the tree and toggling the **Control Frame Deformation** button ( ) in the toolbar or by right-clicking the physics interface node and selecting **Control Frame Deformation** from the context menu.

Discretization Selection

You can also right-click a physics node in the selection tree to select the discretization. The discretizations appear at the bottom of the context menu (underneath the horizontal divider). In most cases, the only option, and the default, is **Physics Settings**, which takes the discretization from the physics interface's **Settings** window, but if you have added separate **Discretization** nodes, you can select from one of those instead of **Physics Settings**.

	If you have the AC/DC Module, see *Electric Shielding*: Application Library path **ACDC_Module/Resistive_Devices/electric_shielding**.

Error Estimation — Theory and Variables

Error estimation is available in the **Adaption and Error Estimation** section of the Stationary, Eigenfrequency, and Frequency Domain study step types.

THEORY BACKGROUND

A common approach to adaptive finite elements is to use the dual weighted residual method (DWR). The method is based on a posteriori error estimates for a functional together with some adaptive approach for the mesh in space and time. The framework was originally developed in Ref. 1 and Ref. 2. For stationary problems or problems cast in a Galerkin formulation, the starting point is the exact error representation

$$J(u) - J(u_h) = J(e) = \min_{z_h \in V_h} \rho(u_h, z - z_h) \tag{20-1}$$

where J is a (linear) functional and the primal approximate solution $u_h \in V_h$ is defined by a variational formulation

$$\rho(u_h, \hat{u}_h) = A(u_h, \hat{u}_h) - F(\hat{u}_h) = 0, \forall \hat{u}_h \in V_h$$

and the exact dual solution z by

$$\rho(\hat{z}, z) = A(\hat{z}, z) - J(\hat{z}) = 0, \forall \hat{z} \in V$$

For simplicity, nonlinearity has been omitted. For nonlinear functionals and for nonlinear variational formulations, the dominating part of the error can be estimated by approximating the above (dual) weighted residual. In those cases, the dual is computed for problems obtained by linearizing around the primal solution. The error representation is often taken to a local form by using integration by parts. This is straightforward when the equation form is strong but is not applicable for physics implemented using the weak form. Instead, the error estimation algorithm uses a method that can estimate the residual for the weak form directly. It works through assembling the algebraic residual for the current solution mapped to a higher-order finite-element representation. The method introduces an extension mapping $\pi_{h'}$ from the current finite-element space to a higher-order finite-element space. Instead of the strong form variant, it uses

$$\rho_K = \left\|\rho(\pi_h u_h, \cdot)\right\|_K$$
$$\omega_K = \left\|z - \pi_h z\right\|_K$$

where the residual is computed by standard finite element method assembling (using numerical quadrature) for the higher-order finite-element space. This residual is then used to compute a normalized element-wise norm for each equation (here defined by the fields and their components). This technique is the same as when using mesh adaptation (see The Adaptive Mesh Refinement Solver). Also for the error estimation, the method separates the error contribution from different equations:

$$|J(e)| = \sum_K \sum_j \rho_{K,j}\omega_{K,j}$$

where j is an equation index, and where the equations are defined from the field components.

$$\rho_{K,j} = \left\|\rho^{<j>}(\pi_h u_h, \cdot)\right\|_K \approx |K|^{1/2}\bar{\rho}_{K,j} \tag{20-2}$$

where $\bar{\rho}_{K,j}$ is the estimated maximum norm of the residual for the equation j and mesh element K. Furthermore,

$$\omega_{K,j} = \left\|z^{<j>} - \pi_h z^{<j>}\right\|_K \approx |K|^{1/2}\bar{\xi}_{K,j} \tag{20-3}$$

where $\bar{\xi}_{K,j}$ is the estimated maximum norm of the error for the dual solution to equation j and mesh element K. Since the exact dual solution is often not known, the weight function $z \bullet \pi_h z$ must be approximated by some method. For Lagrange basis functions, the method uses the polynomial-preserving recovery technique (built-in through the `ppr` operator) to estimate the dual solution and thereby the error

$$\bar{\xi}_{K,j} = \max_l \left|\mathrm{ppr}(z_h^{<j>} - z_h^{<j>})(x_l)\right| \tag{20-4}$$

where x_l are a number of coordinates in the mesh element K. These coordinates are a union of Lagrange points and Gauss points. For non-Lagrange basis functions, the polynomial-preserving recovery (PPR) technique is not supported, and the method uses a less accurate method based on the dual solution gradient and the following estimate of the dual solution error:

$$\bar{\xi}_{K,j} = \max_l |K| \left\|(\nabla z_h^{<j>})(x_l)\right\| \tag{20-5}$$

ACCURACY

Ideally, since the error representation (Equation 20-1) is exact, the error estimate above has the potential of being very accurate. The method is not fail-safe, however. For example, the underlying PDE problem needs to be well-posed and its solution sufficiently regular. Sufficiently regular means that not only is the solution bounded in some norm, but also a number of derivatives need to be bounded in some norm. Well-posedness for the dual problem and sufficient regularity for the dual solution are also required.

Furthermore, the following guidelines should be kept in mind when using the estimates:

- The error estimate described here is the *truncation error* (also sometimes called the *Galerkin error* for the finite element method). It does not take into account:
  - The *quadrature error* made by using numerical methods to approximate the finite element integrals.
  - The *geometrical approximation error* made by representing the actual geometry by a polynomial representation (which is a sort of integration error for elements adjacent to or on a curved boundary).
  - The *algebraic error* obtained by terminating the solvers prematurely (or by using a sloppy tolerance).

  In most situations, however, the Galerkin error is the dominating error in a finite element calculation.
- Due to the independent maximum norms used for the dual error and the residual within each mesh element, the error estimate is normally an upper bound. When the error is very localized (to only a few elements) — for example, when a field value in a point is used as the functional — the discrepancy between the actual error and the estimated error tends to be larger than for cases where the error is less localized. For cases when the `ppr` method can be used, a rule-of-thumb is that the error estimate is accurate within a factor five when the error is not so localized and one order of magnitude larger when the error is very localized. When the gradient-based dual error estimation is used, the discrepancy can be much larger. This difference in accuracy occurs because this estimate does not have the correct asymptotic behavior (the correct convergence rate when the mesh size is diminished). A warning is given when the gradient method is used for a dependent variable.
- The estimates are based on the assumption that the true dual solution can be approximated reasonably well with the current discretization. If this is not fulfilled, the dual solution error estimates (Equation 20-4 and Equation 20-5) can underestimate the true error.

ERROR VARIABLES AND ERROR EVALUATION

The residual and dual weights (Equation 20-2 and Equation 20-3) for a component `comp1.u` are stored in dependent variables called `comp1.res.u` and `comp1.dualw.u`, respectively. The error variable is defined as the product of these and is accessible as `comp1.err.u`. These variables are accessible for plotting under **Plot Group>Expression** and then, for example, **Component 1>Solid Mechanics>Error estimation>err.u - Error estimate u**. For a sum of all error estimates for all components, use **Model>Error_estimation>stat.errtot - Total error estimate - Stationary**.

You can access the residual and dual weights directly through the dependent variable names. For a Stationary study step called `stat` (similarly for a Frequency Domain study step), the total global error summed over all mesh elements is `stat.errEst`, and the error contribution from a variable `comp1.q` is `comp1.stat.errEst.q`. The error contribution from `comp1.q` can be evaluated under **Results>Derived Values** by adding a **Global Evaluation** node, and then under **Expression** selecting **Global Definitions>Error estimation>stat.errEst - Error estimate global - Stationary**. The error contribution from `comp1.q` can be evaluated by selecting **Component1>Global Definitions>Error estimation>stat.errEst.q - Error estimate q**.

REFERENCES FOR ERROR ESTIMATION

1. R. Becker and R. Rannacher, “An optimal control approach to a posteriori error estimation in finite element methods”, Acta Numerica, pp. 1–102, vol. 10, 2001.

2. K. Eriksson, D. Estep, P. Hansbo, and C. Johnsson, “Introduction to adaptive methods for differential equations”, Acta Numerica, pp. 105–158, 1995.

Stationary

The **Stationary** ( ) study and study step are used when field variables do not change over time, such as in stationary problems.

In electromagnetics, it is used to compute static electric or magnetic fields, as well as direct currents. In heat transfer, it is used to compute the temperature field at thermal equilibrium. In solid mechanics, it is used to compute deformations, stresses, and strains at static equilibrium. In fluid flow, it is used to compute the steady flow and pressure fields. In chemical species transport, it is used to compute steady-state chemical composition in steady flows. In chemical reactions, it is used to compute the chemical composition at equilibrium of a reacting system.

It is also possible to compute several solutions, such as a number of load cases or to track the nonlinear response to a slowly varying load.

A **Stationary** study step node corresponds to a Stationary Solver (the default) or a parametric solver.

There is also an option to run a Stationary study with an Auxiliary sweep, with or without a continuation parameter. When a continuation parameter is selected, the continuation algorithm is run, which assumes that the sought solution is continuous in these parameters. If no continuation parameter is given, a plain sweep is performed where a solution is sought for each value of the parameters. In both cases, a **Stationary Solver** node plus a **Parametric** attribute is used. The parametric solver is the algorithm that is run when a **Parametric** attribute node is active under a **Stationary Solver** node. Similarly, when the mesh adaptation solver is the algorithm that is run, an **Adaptive Mesh Refinement** subnode is added under a **Stationary Solver** node.

When there are active least-squares objective functions in the model, it is possible to run an Auxiliary sweep with least-squares defined parameters if there are any. To use this possibility, choose **From least-squares objective** from the **Parameter list method** list. Otherwise, **Parameter list method** is set to **Manual**. This option is hidden if there are no least-squares objectives in the model.

	The **Study Settings**, **Physics and Variables Selection**, **Values of Dependent Variables**, **Mesh Selection**, **Adaptation and Error Estimates**, and **Geometric Entity Selection for Adaptation** sections are described in Common Study Step Settings. There is also detailed information in the Physics and Variables Selection and Values of Dependent Variables sections. Note that the **Study Settings** section is empty if there is no **Include geometric nonlinearity** check box or **Parameter list method** list.

RESULTS WHILE SOLVING

	This section is empty and unavailable when results while solving is not used or not applicable; for example, it is empty when there is an outer Parametric Sweep or Optimization active (and when no Auxiliary Sweep or Load Cases are used) and when you have enabled adaptive mesh refinement in the Stationary study step.

Select the **Plot** check box to allow plotting of results while solving. Then select what to plot from the **Plot group** and **Update at** lists. The software plots the dataset of the selected plot group as soon as the results become available. Select **Times stored in output** (the default) or **Time steps taken by solver** from the **Update at** list.

Use the **Probes** list to select any probes to evaluate. The default is **All**, which selects all probes for plotting and tabulation of probe data. Select **Manual** to open a list with all available probes. Use the **Move Up** ( ), **Move Down** ( ), **Delete** ( ), and **Add** ( ) buttons to make the list contain the probes that you want to see results from while solving. Select **None** to not evaluate any probe.

The software plots the dataset of the selected plot group and probes as soon as the results become available. Select **Steps stored in output** (the default) or **Steps taken by solver** from the **Update at** list.

STUDY EXTENSIONS

This section contains some optional extensions of the study, such as Auxiliary Sweep (including continuation) and load cases.

Load Cases

Select the **Define load cases** check box to define load cases as combinations of defined load groups, multiplied with optional weights (load factors), and constraint groups. When this check box is selected, and a Parametric attribute node is also used, the load cases are also displayed under the **Load Cases** section for the **Parametric** node.

Load cases are useful for efficiently solving for a number of cases with varying loads (and constraints) in the same model without the need to reassemble the stiffness matrix. Use the **Move Up** ( ), **Move Down** ( ), **Delete** ( ), and **Add** ( ) buttons to make the list contain the load cases that you want to solve for. For each load case, click in the column for the load groups and constraint groups that you want to include in the load case. By default, no load groups and constraint groups are included ( ). Load groups and constraint groups that are included appear with a check mark ( ). Optionally, change the default weights for the load groups from 1.0 to another value in the corresponding **Weight** column (which is to the right of the load group that it is acting on). A weight of 1.5, for example, adds an extra 50% to the magnitude of the loads in the load group; a weight of –1 reverses the direction of the loads.

- Load Group and Constraint Group
- About the Parametric Solver
- Using Load Cases

Distribute Parametric Solver

If you are running a parametric sweep and want to distribute it by sending one parameter value to each compute node, select the **Distribute parametric solver** check box. This requires that your study includes a parametric sweep. To enable this option, click the **Show More Options** button ( ) and select **Bath and Cluster** in the **Show More Options** dialog box.

Time Dependent

The **Time Dependent** ( ) study and study step are used when field variables change over time.

For example, in electromagnetics, it is used to compute transient electromagnetic fields, including electromagnetic wave propagation in the time domain. In heat transfer, it is used to compute temperature changes over time. In solid mechanics, it is used to compute the time-varying deformation and motion of solids subject to transient loads. In acoustics, it is used to compute the time-varying propagation of pressure waves. In fluid flow, it is used to compute unsteady flow and pressure fields. In chemical species transport, it is used to compute chemical composition over time. In chemical reactions, it is used to compute the reaction kinetics and the chemical composition of a reacting system.

Selecting a Time Dependent study adds a **Time Dependent** study step node and sets up a solver with a Time-Dependent Solver. Use this study for a time-dependent or transient simulation using a Time-Dependent Solver for computing the solution over time. Also see The Relationship Between Study Steps and Solver Configurations. You do not need to consider the settings in the Time-Dependent Solver unless the simulation does not behave as expected. For example, the simulation behaves in an unexpected way when changing the end time, in case you may need to adjust the default settings for the time stepping and the tolerances.

For time-dependent simulations, check that the initial conditions and the boundary conditions match at the starting time. If they do not match, the model setup is likely unphysical, and the time-dependent solver can take very small time steps trying to reconcile inconsistent initial values.

The **Physics and Variables Selection**, **Values of Dependent Variables**, and **Mesh Selection** sections, and the **Include geometric nonlinearity** check box, **Auxiliary sweep** settings, and **Adaptive mesh refinement** settings in the **Study Extensions** section are described in Common Study Step Settings. There is also detailed information in the Physics and Variables Selection and Values of Dependent Variables sections.

STUDY SETTINGS

Select a **Time/parameter list method**. This option only appears if there are active least-squares objective functions defined in the model. The default is **Manual**, which means that the time list defined in the **Times** field is used. The other possibility is **From least-squares objective**, which means that the time list defined by least-squares objectives is used. If you use the latter possibility, you specify the **Initial time** instead (the default is 0).

Select a **Time unit** from the list (default: s) to use a time unit that is convenient for the time span of the simulation. Then specify the time interval for the output from the simulation in the **Times** field using the selected time unit. You can type a monotonically increasing list of individual values, for example, `0 1 2 5 10 20`; use the `range` operator, for example, `range(0,0.1,1.5)`, which (using seconds as the time unit) gives time steps from 0 to 1.5 s with a step size of 0.1 s; or use any combinations of such input.

From the **Tolerance** list, choose **Physics controlled** (the default) to use the tolerance suggested by the physics. Choose **User controlled** to override the suggested relative tolerance with a value that you enter in the **Relative tolerance** check field. The tolerance settings control the internal time steps taken by the solver, so selecting large time steps for the output times does not affect the accuracy in the time stepping.

When plotting the results from a time-dependent simulation, you can choose to plot the solution at any of the times specified in the **Times** field. You can also plot an interpolated solution at any intermediate time. The interpolation used between times is a cubic Hermite spline; that is, the interpolation uses both the solution values and their time derivatives at two points: the closest output times before and after the time for which the interpolated solution is computed.

RESULTS WHILE SOLVING

Select the **Plot** check box to allow plotting of results while solving. Then select what to plot from the **Plot group** and **Update at** lists. The software plots the dataset of the selected plot group as soon as the results become available either at the times specified by the output times (from the **Times** field) or at a set of internal times defined by the solver. Select **Times stored in output** (the default) or **Time steps taken by solver** from the **Update at** list.

Use the **Probes** list to select any probes to evaluate. The default is **All**, which selects all probes for plotting and tabulation of probe data. Select **Manual** to open a list with all available probes. Use the **Move Up** ( ), **Move Down** ( ), **Delete** ( ), and **Add** ( ) buttons to make the list contain the probes that you want to see results from while solving. Select **None** to not evaluate any probe. For the probes, you also select **Times stored in output** or **Time steps taken by solver** (the default) from the associated **Update at** list at the bottom of the section.

ADAPTATION

Select the **Adaptive mesh refinement** check box to activate time-dependent mesh adaptation. Then choose the geometry in which you want to use adaptive mesh refinement from the **Adaptation in geometry** list. If you want to use adaptive mesh refinement in only part of that geometry, select the geometric entities for the adaptation in the Geometric Entity Selection for Adaptation that becomes available below this section.

See Adaptive Mesh Refinement for additional settings for adaptive mesh refinement in the **Adaptive Mesh Refinement** subnode under the **Time-Dependent Solver** node in the generated solver configuration.

GEOMETRIC ENTITY SELECTION FOR ADAPTATION

From the **Geometric entity level** list, choose the geometric entity on which you want to do adaptive mesh refinement: **Entire geometry** (the default), **Domain**, **Boundary**, or **Edge** (3D only). For example, selecting **Boundary** can be useful if the model includes a physics interface defined on boundaries (surfaces) and you want to base the adaptation on that physics interface. For all levels except **Entire geometry**, make a selection of the geometric entities to include using the **Selection** list and selection tools below.

STUDY EXTENSIONS

This section contains some optional extensions of the study. The options are mutually exclusive and only one of the check boxes can be selected. See Auxiliary Sweep for its settings. Auxiliary sweeps are not available when the **Time/parameter list method** in the **Study Settings** section is set to **From least-squares objective**.

Automatic Remeshing

Select the **Automatic remeshing** check box if you want the solver to remesh automatically when the quality of the mesh becomes poor in a Time Dependent study. Select the geometry to use for the automatic remeshing from the **Remesh in geometry** list. With automatic remeshing active, the solver adds an **Automatic Remeshing** subnode under the **Time-Dependent Solver** node. In that subnode, you specify the mesh quality expression that determines when to remesh.

Time Discrete

The **Time Discrete** ( ) study step adds a Time Discrete Solver. Use it for performing time-dependent analysis using the projection method. The settings for this study node are the same as for the Time Dependent node. Also see The Relationship Between Study Steps and Solver Configurations.

Time Dependent, Modal

The **Time Dependent, Modal** ( ) study and study step are used to compute the dynamic structural deformation of an object subject to a transient force.

The study consists of two study steps: one Eigenfrequency study step for computing the eigenfrequencies and eigenmodes of the structure, and a second **Time Dependent, Modal** study step for computing the modal response. In the mode superposition analysis, the deformation of the structure is represented by a linear combination of the structure's eigenmodes. This means that the frequency content of the loads is limited by the frequencies of the computed eigenmodes. All loads are assumed to have the same variation with time. A Time Dependent, Modal study usually results in a faster computation than a direct solution using the Time Dependent study.

Selecting a Time Dependent, Modal study step gives a Time Dependent, Modal study step with a Modal Solver. Use it for performing transient response analyses. The settings are the same as for the Time Dependent study step for the sections that they share (the Time Dependent study step includes some additional settings). Also see The Relationship Between Study Steps and Solver Configurations.

	With the Structural Mechanics Module, see *Various Analyses of an Elbow Bracket*, Application Library path **Structural_Mechanics_Module/Tutorials/elbow_bracket**.

EEDF Initialization

The **EEDF Initialization** ( ) study is available for the Plasma, Time Periodic, Inductively Coupled Plasma and Microwave Plasma and Plasma interfaces. You can also add it from the **Study Steps>Stationary** submenu. It acts almost identically to the **Stationary** study and is used to initialize the electron energy distribution function (EEDF)

for cases when the EEDF is computed using the two-term approximation to the Boltzmann equation. See Stationary for information about the settings for the **EEDF Initialization** study step's **Settings** window.

Time Periodic

The **Time Periodic** ( ) study is available for the Plasma, Time Periodic interface. You can also add it from the **Study Steps>Stationary** submenu. It acts almost identically to the **Stationary** study and is used for a periodic steady-state solution. See Stationary for information about the settings for the **Time Periodic** study step's **Settings** window.

Time Periodic to Time Dependent

The **Time Periodic to Time Dependent** ( ) study is available for the Plasma, Time Periodic interface. You can also add it from the **Study Steps>Time Dependent** submenu. It is identical to the **Time Dependent** study and is used to convert a periodic steady-state solution to a time-dependent solution. See Time Dependent for information about the settings for the **Time Periodic to Time Dependent** study step's **Settings** window.

Frequency to Time FFT

The **Frequency to Time FFT** ( ) study step, which you can add to a study where the last study step is typically a frequency-domain study, performs an inverse FFT (or, alternatively, the nonuniform Fourier transform) from the frequency domain (input) to the time domain (output). As the default solver it adds an FFT solver. The **Settings** window has the following special section:

STUDY SETTINGS

From the **Input study** list, choose the study from which the FFT takes its input data (the list contains frequency-domain studies and the name of the Time Dependent study that correlates to **Current**). You can also choose **Current** to take it from the same study as the one that includes the **Frequency to Time FFT** study step. For the remaining settings, see FFT Solver, which takes the settings from this study step by default.

VALUES OF DEPENDENT VARIABLES

The contents of this section are similar to other **Values of Dependent Variables** sections, but it does not include any settings for the initial values of variables solved for.

Eigenfrequency

The **Eigenfrequency** ( ) study and study step are used to compute eigenmodes and eigenfrequencies of a linear or linearized model.

For example, in electromagnetics, the eigenfrequencies correspond to the resonant frequencies and the eigenmodes correspond to the normalized electromagnetic field at the eigenfrequencies. In solid mechanics, the eigenfrequencies correspond to the natural frequencies of vibrations and the eigenmodes correspond to the normalized deformed shapes at the eigenfrequencies. In acoustics, the eigenfrequencies correspond to the resonant frequencies and the eigenmodes correspond to the normalized acoustic field at the eigenfrequencies.

Selecting an Eigenfrequency study gives a solver with an Eigenvalue Solver. Use this study to solve an eigenvalue problem for a set of eigenmodes and associated eigenfrequencies. Also see The Relationship Between Study Steps and Solver Configurations.

	The **Physics and Variables Selection**, **Values of Dependent Variables**, **Mesh Selection**, **Adaptation and Error Estimates**, and **Geometric Entity Selection for Adaptation** sections and the **Include geometric nonlinearity** check box are described in Common Study Step Settings. There is also detailed information in the Physics and Variables Selection and Values of Dependent Variables sections.

STUDY SETTINGS

From the **Eigenfrequency search method** list, select a search method:

- **Manual** (the default), to specify some search criteria manually. See Manual Eigenfrequency Search Settings below.
- **Region**, to define an eigenfrequency search region in a complex plane. See Eigenvalue Search Region Settings below.

Manual Eigenfrequency Search Settings

By default, the physics interfaces suggest a suitable number of eigenfrequencies to search for. To specify the number of eigenfrequencies, select the check box in front of the **Desired number of eigenfrequencies** field to specify the number of eigenfrequencies you want the solver to return (default: 6).

	In a 3D model, the first six eigenfrequencies are typically zero and correspond to the rigid-body modes of a 3D geometry. You may therefore need to specify a larger amount of eigenfrequencies. The largest number of eigenfrequencies that the solver can compute is equal to the number of unconstrained degrees of freedom minus two.

By default, the physics interfaces suggest a suitable value around which to search for eigenfrequencies. To specify the value to search for eigenfrequencies around (shift), select the check box in front of the **Search for eigenfrequencies around** field. You can specify a value (as an eigenfrequency) around which the eigenvalue solver should look for solutions to the eigenvalue equation (default: 0).

Use the **Eigenfrequency search method around shift** list to control how the eigenvalue solver searches for eigenfrequencies around the shift value specified in the **Search for eigenfrequencies around** field.

- Select **Closest in absolute value** (the default value) to search for eigenfrequencies that are closest to the shift value when measuring the distance as an absolute value.
- Select **Larger real part** to search for eigenfrequencies with a larger real part than the shift value.
- Select **Smaller real part** to search for eigenfrequencies with a smaller real part than the shift value.
- Select **Larger imaginary part** to search for eigenfrequencies with a larger imaginary part than the shift value.
- Select **Smaller imaginary part** to search for eigenfrequencies with a smaller imaginary part than the shift value.

	When using a search for eigenfrequencies, the nonsymmetric eigenvalue solver is always used, even when the problem to solve is symmetric.

Eigenfrequency Search Region Settings

Use the **Approximate number of eigenfrequencies** field to specify the approximate number of eigenfrequencies you want the solver to return (default: 20). The value of the **Approximate number of eigenfrequencies** will affect the **Dimension of Krylov space** used by the algorithm; see the **Advanced** section of the Eigenvalue Solver. It means that

increasing the value of the **Approximate number of eigenfrequencies** will increase the memory requirement and the computational time. If the solver indicates that the value of the **Approximate number of eigenfrequencies** is smaller than the actual number of eigenfrequencies in the given region, it will perform a search for more eigenfrequencies, which increases the computational time; see The Eigenvalue Region Algorithm. Within limits it is often more efficient to provide a too large value of **Approximate number of eigenfrequencies** than a too small.

In the **Maximum number of eigenfrequencies** field, you can specify a maximum number of eigenfrequencies to limit the eigenvalue solver's search for additional eigenvalues (default: 200).

The **Perform consistency check** check box is selected by default to increase confidence that the solver finds all eigenfrequencies in the search region. The work required for performing the consistency check constitutes a significant part of the total work of the eigenfrequency computation.

Under **Search region**, you define the size of the search region for eigenfrequencies as a rectangle in the complex plane by specifying the **Smallest real part**, **Largest real part**, **Smallest imaginary part**, and **Largest imaginary part** in the respective text fields. The search region also works as an interval method if the **Smallest imaginary part** and **Largest imaginary part** are equal; the eigenvalue solver then only considers the real axis and vice versa.

	The eigenvalue solver can in some cases return more than the desired number of eigenfrequencies (up to twice the desired number). These are eigenfrequencies that the eigenvalue solver finds without additional computational effort.

Symmetry Settings

Eigenvalue computations can be performed with a nonsymmetric solver or, if applicable, a real symmetric solver, which improves performance if applicable. From the **Use real symmetric eigenvalue solver** list, choose **Automatic** (the default) or **Off**. For the **Automatic** option there is the option to select the **Real symmetric eigenvalue consistency check** check box. This check increases the computational time and memory requirements but provides a rigorous check of the applicability of the real symmetric solver.

STUDY EXTENSIONS

This section contains some optional extensions of the study, such as auxiliary sweeps (see Common Study Step Settings). Adding an auxiliary parametric sweep adds an Eigenvalue Parametric attribute node to the Eigenvalue Solver.

Distribute Parametric Solver

If you are running an auxiliary sweep and want to distribute it by sending one parameter value to each compute node, select the **Distribute parametric solver** check box. To enable this option, click the **Show More Options** button ( ) and select **Batch and Cluster** in the **Show More Options** dialog box.

	Tuning Fork: Application Library path **COMSOL_Multiphysics/Structural_Mechanics/tuning_fork**. For a model that uses a search region for the eigenfrequencies, with the Acoustics Module, see *Helmholtz Resonator Analyzed with Different Frequency Domain Solvers*: Application Library path **Acoustics_Module/Tutorials,_Pressure_Acoustics/helmholtz_resonator_solvers**.

Eigenvalue

The **Eigenvalue** ( ) study and study step are used to compute the eigenvalues and eigenmodes of a linear or linearized model in a generic eigenvalue formulation where the eigenvalues are not necessarily frequencies. The Eigenvalue study gives you full control of the eigenvalue formulation, in contrast to the eigenfrequency study that is adapted for specific physics interfaces. The Eigenvalue study is typically used for equation-based modeling.

Selecting an Eigenvalue study gives a solver configuration with an Eigenvalue Solver.

	The **Physics and Variables Selection**, **Values of Dependent Variables**, **Mesh Selection**, **Adaptation and Error Estimates**, and **Geometric Entity Selection for Adaptation** sections and the **Include geometric nonlinearity** check box are described in Common Study Step Settings. There is also detailed information in the Physics and Variables Selection and Values of Dependent Variables sections.

STUDY SETTINGS

From the **Eigenvalue search method** list, select a search method:

- **Manual** (the default), to specify some search criteria manually. See Manual Eigenvalue Search Settings below.
- **Region**, to define an eigenvalue search region in a complex plane. See Manual Eigenvalue Search Settings below and The Eigenvalue Solver Algorithm.
- **All (filled matrix)** to find all eigenvalues for a filled matrix. This option is only applicable for small eigenvalue problems.

Manual Eigenvalue Search Settings

By default, the physics interfaces suggest a suitable number of eigenvalues to search for. To specify the number of eigenvalues, select the check box in front of the **Desired number of eigenvalues** field to specify the number of eigenvalues you want the solver to return (default: 6).

	In a 3D model, the first six eigenvalues are typically zero and correspond to the rigid-body modes of a 3D geometry. You may therefore need to specify a larger number of eigenvalues. The largest number of eigenvalues that the solver can compute is equal to the number of unconstrained degrees of freedom minus two.

By default, the physics interfaces suggest a suitable value around which to search for eigenvalues. To specify the value to search for eigenvalues around (shift), select the check box in front of the **Search for eigenvalues around** field; you can then specify a value or expression around which the eigenvalue solver should look for solutions to the eigenvalue equation (default: 0).

Use the **Eigenvalue search method around shift** list to control how the eigenvalue solver searches for eigenvalues around the specified shift value:

- Select **Closest in absolute value** (the default value) to search for eigenvalues that are closest to the shift value when measuring the distance as an absolute value.
- Select **Larger real part** to search for eigenvalues with a larger real part than the shift value.
- Select **Smaller real part** to search for eigenvalues with a smaller real part than the shift value.
- Select **Larger imaginary part** to search for eigenvalues with a larger imaginary part than the shift value.
- Select **Smaller imaginary part** to search for eigenvalues with a smaller imaginary part than the shift value.

	When using a search for eigenvalues, the nonsymmetric eigenvalue solver is always used, even when the problem to solve is symmetric.

Eigenvalue Search Region Settings

Use the **Approximate number of eigenvalues** field to specify the approximate number of eigenvalues you want the solver to return (default: 20). The value of the **Approximate number of eigenvalues** will affect the **Dimension of Krylov space** used by the algorithm; see the **Advanced** section of the Eigenvalue Solver. It means that increasing the value

of the **Approximate number of eigenvalues** will increase the memory requirement and the computational time. If the solver indicates that the value of the **Approximate number of eigenvalues** is smaller than the actual number of eigenvalues in the given region, it will perform a search for more eigenvalues, which increases the computational time; see The Eigenvalue Region Algorithm. Within limits it is often more efficient to provide a too large value of **Approximate number of eigenvalues** than a too small.

In the **Maximum number of eigenvalues** field, you can specify a maximum number of eigenvalues to limit the eigenvalue solver's search for additional eigenvalues (default: 200).

The **Perform consistency check** check box is selected by default to increase confidence that the solver finds all eigenvalues in the search region. The work required for performing the consistency check constitutes a significant part of the total work of the eigenvalue computation.

Under **Search region**, you define the size of the search region for eigenvalues as a rectangle in the complex plane by specifying the **Smallest real part**, **Largest real part**, **Smallest imaginary part**, and **Largest imaginary part** in the respective text fields. The search region also works as an interval method if the **Smallest imaginary part** and **Largest imaginary part** are equal; the eigenvalue solver then only considers the real axis and vice versa.

	The eigenvalue solver can in some cases return more than the desired number of eigenvalues (up to twice the desired number). These are eigenvalues that the eigenvalue solver finds without additional computational effort.

Symmetry Settings

Eigenvalue computations can be performed with a nonsymmetric solver or, if applicable, a real symmetric solver. From the **Use real symmetric eigenvalue solver** list, choose **Automatic** (the default) or **Off**. For the **Automatic** option there is the option to select the **Real symmetric eigenvalue consistency check** check box. This check increases the computational time and memory requirements but provides a rigorous check of the applicability of the real symmetric solver.

STUDY EXTENSIONS

This section contains some optional extensions of the study, such as auxiliary sweeps (see Common Study Step Settings). Adding an auxiliary parametric sweep adds an Eigenvalue Parametric attribute node to the Eigenvalue Solver.

Distribute Parametric Solver

If you are running an auxiliary sweep and want to distribute it by sending one parameter value to each compute node, select the **Distribute parametric solver** check box. To enable this option, click the **Show More Options** button ( ) and select **Batch and Cluster** in the **Show More Options** dialog box.

Frequency Domain

The **Frequency Domain** ( ) study and study step are used to compute the response of a linear or linearized model subjected to harmonic excitation for one or several frequencies.

For example, in solid mechanics, it is used to compute the frequency response of a mechanical structure with respect to particular load distributions and frequencies. In acoustics and electromagnetics, it is used to compute the transmission and reflection versus frequency. A Frequency Domain study step accounts for the effects of all eigenmodes that are properly resolved by the mesh and how they couple with the applied loads or excitations. The output of a Frequency Domain study step is typically displayed as a transfer function, for example, magnitude or phase of deformation, sound pressure, impedance, or scattering parameters versus frequency.

It is also possible to add an auxiliary sweep to this study step, which creates a multiparameter sweep (Parametric solver) over both the frequency and the given parameters, and optionally with continuation in the frequency or in one of the given parameters. It corresponds to a stationary parametric solver that is preset to linearize the equations (Stationary Solver with a Parametric attribute).

Alternatively, select the **Use asymptotic waveform evaluation** check box to use an AWE Solver instead of the Parametric solver.

	The **Include geometric nonlinearity** check box and the **Results While Solving**, **Mesh Selection**, **Adaptation and Error Estimates**, **Geometric Entity Selection for Adaptation**, and **Auxiliary Sweep** section are described in Common Study Step Settings. There is also detailed information in the Physics and Variables Selection and Values of Dependent Variables sections.

STUDY SETTINGS

Select a **Frequency/parameter list method**. This option only appears if there are active least-squares objective functions defined in the model. The default is **Manual**, which means that the frequency list defined in the **Frequencies** field is used. The other possibility is **From least-squares objective**, which means that the frequency list defined by least-squares objectives is used.

Specify the frequencies to use for the frequency sweep. Select the unit to use from the **Frequency unit** list (default: Hz). Type the frequencies in the **Frequencies** field using space-separated numbers or the `range` function.

Use the **Load parameter values** field to select a file with parameter values. You can browse your file system for files by clicking the **Browse** button. After selecting a file, click the **Read File** button to load the parameter values into the **Frequencies** field.

For information about the **Reuse solution from previous step** list, see Reuse Solution from Previous Step List.

STUDY EXTENSIONS

Also see Auxiliary Sweep.

Asymptotic Waveform Evaluation

Select the **Use asymptotic waveform evaluation** check box to enable the *asymptotic waveform evaluation (AWE) solver*. The Frequency Domain study generates a solver configuration that is used to solve a stationary parametric problem or an asymptotic waveform evaluation problem. By selecting this check box, this study step corresponds to an AWE Solver.

Distribute Parametric Solver

If you are running a parametric sweep and want to distribute it by sending one parameter value to each compute node, select the **Distribute parametric solver** check box. This requires that your study includes a parametric sweep. To enable this option, click the **Show More Options** button ( ) and select **Batch and Cluster** in the **Show More Options** dialog box.

Frequency Domain, Modal

The **Frequency Domain, Modal** ( ) study and study step are used, for example, to compute the response of a linear or linearized structural mechanics model subjected to harmonic excitation for one or several frequencies.

The Frequency, Domain Modal study consists of two study steps: an Eigenfrequency study step for computing the eigenfrequencies and eigenmodes of the structure followed by a second Frequency Domain, Modal study step for computing the modal response. In the mode superposition analysis, the deformation of the structure is represented by a linear combination of the structure's eigenmodes. This means that the frequencies to be studied are limited by

the frequencies of the computed eigenmodes. A Frequency, Domain Modal study usually results in a faster computation than a direct solution using the Frequency Domain study.

The following sections describe the settings for the Frequency, Domain Modal study step. See Eigenfrequency for information about the settings for the Eigenfrequency study step.

The Frequency, Domain Modal study step node corresponds to a modal frequency sweep for systems with frequency-based loads. It gives a Modal Solver.

	The **Include geometric nonlinearity** check box and **Mesh Selection** are described in Common Study Step Settings. There is also detailed information in the Physics and Variables Selection and Values of Dependent Variables sections.

STUDY SETTINGS

Specify the frequencies to use for the frequency sweep. Select the unit to use from the **Frequency unit** list (default: Hz). Enter the frequencies in the **Frequencies** field using space-separated numbers or the `range` function.

Use the **Load parameter values** field to select a file with parameter values. Click the **Browse** button to browse the file system. After selecting a file, click the **Read File** button to load the parameter values into the **Frequencies** field.

Use the **Parameter list type** list to control how to interpret the parameter values entered in the **Parameter values** field. Select:

- **Frequency** (the default setting) to use the parameter values without modification.
- **Fraction** to multiply the parameter values by the absolute value of the largest eigenvalue in the reduced model divided by two.
- **Spread** to treat the parameter values as an interval around each eigenvalue in the reduced model. That is, the absolute value of each eigenvalue is multiplied by the parameter values and the resulting parameter value vectors are concatenated into one.

For information about the **Reuse solution from previous step** list, see Reuse Solution from Previous Step List.

	With the Structural Mechanics Module, see *Various Analyses of an Elbow Bracket*, Application Library path **Structural_Mechanics_Module/Tutorials/elbow_bracket**.

Frequency Domain, AWE Reduced-Order Model

The **Frequency Domain, AWE Reduced-Order Model** ( ) node is not a study in itself; rather, it adds a number of nodes to the Model Builder tree to facilitate a reduced-order model (ROM) creation. These nodes are configured to set up a ROM to perform a frequency-domain sweep using the asymptotic wave evaluation (AWE) technique.

Two studies are added:

- One study with a **Frequency Domain** study step. This study can mainly be considered as a placeholder that is a mandatory input to the model reduction.
- One study with a **Model Reduction** study step, in which the ROM is created. It references the previous study.

Under **Global Definitions**, a **Reduced-Order Modeling** node is added. It contains a subnode, which is a **Frequency Domain, AWE Reduced-Order Model** node. This is a placeholder for the ROM to be created.

Frequency Domain, Modal Reduced-Order Model

The **Frequency Domain, Modal Reduced-Order Model** ( ) node is not a study in itself; rather, it adds a number of nodes to the Model Builder tree to facilitate a reduced-order model (ROM) creation. These nodes are configured to set up a ROM to perform a frequency domain analysis using mode superposition.

Three studies are added:

- One study with an **Eigenfrequency** study step for computing the eigenfrequencies and corresponding eigenmodes.
- One study with a **Frequency Domain** study step. This study can mainly be considered as a placeholder that is a mandatory input to the model reduction.
- One study with a **Model Reduction** study step, in which the ROM is created. It references the two previous studies. In the common case that you have already computed the eigenmodes, you can change the setting of the **Training study** in this node to point to the old eigenfrequency study, and then delete the newly generated one.

Under **Global Definitions**, a **Reduced-Order Modeling** node becomes available. It contains two subnodes:

- A **Global Reduced Model Inputs** node in which you define the control parameters for the ROM.
- A **Frequency Domain, Modal Reduced-Order Model** node. This is a placeholder for the ROM to be created.

Time Dependent, Modal Reduced-Order Model

The **Time Dependent, Modal Reduced-Order Model** ( ) node is not a study in itself; rather, it adds a number of study nodes to the Model Builder tree to facilitate a reduced-order model (ROM) creation. These nodes are configured to set up a ROM to perform a time dependent analysis using mode superposition.

Three studies are added:

- One study with an **Eigenfrequency** study step for computing the eigenfrequencies and corresponding eigenmodes.
- One study with a **Time Dependent** study step. This study can mainly be considered as a placeholder which is a mandatory input to the model reduction.
- One study with a **Model Reduction** study step, in which the ROM is created. It references the two previous studies. In the common case that you have already computed the eigenmodes, you can change the setting of the **Training study** in this node to point to the old eigenfrequency study, and then delete the newly generated one.

Under **Global Definitions**, a **Reduced-Order Modeling** node is added. It contains two subnodes:

- A **Global Reduced Model Inputs** node in which you define the control parameters for the ROM.
- A **Time Dependent, Modal Reduced-Order Model** node. This is a placeholder for the ROM to be created.

Adaptive Frequency Sweep

The **Adaptive Frequency Sweep** ( ) study and study step are used, for example, to compute the response of a linear or linearized model subjected to harmonic excitation for several frequencies with a fine frequency resolution using a reduced order model in the frequency domain. The Asymptotic Waveform Evaluation (AWE) model reduction is performed by a moment matching technique where Padé approximation or a Taylor series expansion is used for the transfer function in a specified frequency interval. This study step corresponds to an AWE Solver.

STUDY SETTINGS

Specify the frequencies to use for the frequency sweep. Select the unit to use from the **Frequency unit** list (default: Hz). Enter the frequencies in the **Frequencies** field using space-separated numbers or the `range` function.

Use the **Asymptotic Waveform Evaluation (AWE) Expressions** table to specify a list of globally available scalar-valued expressions to be used for error estimation by the AWE algorithm.

In the AWE algorithm, the values of the expressions specified in the **Asymptotic Waveform Evaluation (AWE) Expressions** table in the **Study Settings** section are evaluated at one or more points of a parameter interval using certain expansions. The AWE algorithm is considered to have converged in that interval if the functional values resulting from the different expansions and evaluation points are similar enough. Use the **Relative tolerance** field to specify to what relative tolerance the functional values must agree at the evaluation points.

	See *Evanescent Mode Cylindrical Cavity Filter*, Application Library path **RF_Module/Filters/cylindrical_cavity_filter_evanescent**. *RF Coil*, Application Library path **RF_Module/Passive_Devices/rf_coil**.

Time to Frequency FFT

The **Time to Frequency FFT** study step, which you can add to a study, where the last study type is typically a time-dependent study, performs a forward FFT from the time domain (input) to the frequency domain (output). As the default solver it adds an FFT solver. The **Settings** window for the **Time to Frequency FFT** node ( ) has the following sections:

STUDY SETTINGS

From the **Input study** list, choose the study from which the FFT takes its input data (contains time-domain studies and the name of the Frequency Domain study that correlates to **Current**). You can also choose **Current** to take it from the same study as the one that includes the **Time to Frequency FFT** study step. For the remaining settings, see FFT Solver, which takes the settings from this study step by default.

VALUES OF DEPENDENT VARIABLES

The contents of this section is similar to other **Values of Dependent Variables** sections, but it does not include any settings for the initial values of variables solved for.

Batch

To enable this option in the context menu, click the **Show More Options** button ( ) and select **Batch** or **Batch and Cluster** (if your license includes cluster computing) in the **Show More Options** dialog box.

Use a **Batch** ( ) study to start a COMSOL Multiphysics batch process that solves the current study on your computer. Once the filename and directory are set, right-click the parent **Study** node and choose **Compute** to start a COMSOL Multiphysics batch process that computes the current study.

	You cannot create another Batch, Batch Sweep, Cluster Sweep, or Cluster Computing in the same study at the same time.

When the batch process starts, the COMSOL Desktop follows the progress in The External Process Window. When the process finishes (or you click the **Detach Job** button to no longer follow the process), an **External Process** node is added, one for each parameter, under a **Batch Data** node as in Figure 20-5. The External Process node represents the current running process. For more information, see Batch (Job Configurations), Batch Data, and External Process.

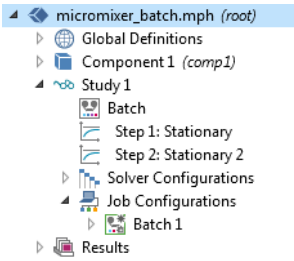

Figure 20-5: An example of the two kinds of Batch nodes available under Study and Job Configurations.

	Micromixer — Batch Version: Application Library path: **COMSOL_Multiphysics/Tutorials/micromixer_batch**

BATCH SETTINGS

Specify the file in which to store the model in the **Filename** field. The directory in which to store the model is the one in the **Batch directory** field on the **Multicore and Cluster Computing** page in the **Preferences** dialog box.

Select the **Generate solver sequence in external process** check box to delay the generation of the solver sequence (for example, to avoid expensive mesh generation on the desktop before submitting the batch job).

If you are connected to a COMSOL Multiphysics server on another computer, you can control the working directory used by the COMSOL Multiphysics server if you select the **Specify server directory path** check box and enter the path to the server **Directory** or **Browse** for the path. Otherwise, a temporary directory on the COMSOL Multiphysics server is used to save files.

STUDY EXTENSIONS

Select the **Use graphics** check box when the batch process should run results nodes that create graphical contents such as exporting to file.

Enter the **Number of simultaneous jobs**. The default is 1. This value is the maximum number of batch processes that are allowed to run simultaneously.

Enter the **Number of job restarts**. The default is 0. This value is the maximum number of times the job can be restarted if it fails to complete, so you need to increase it to make the batch process restart the job.

Enter a value for the **Alive time (seconds)**. The default is 300 seconds. This is the longest time the process is allowed to run before it must inform that it is still running. Failure to do so means that the process is considered dead, and a new process is started if the maximum number of job restarts is not reached. The new job is restarted, and data from the previous job run is treated as invalid.

Batch Sweep

To enable this option in the context menu, click the **Show More Options** button ( ) and select **Batch** or **Batch and Cluster** (if your license includes cluster computing) in the **Show More Options** dialog box.

Use the **Batch Sweep** ( ) study to find the solution to a sequence of stationary or time-dependent simulations that arise when you vary some parameters of interest. See Batch and Batch Sweep for information about situations where a batch sweep is useful. If you want to make a full multiparameter sweep (solving first for the first value of the first parameter combined with all values of the second parameter, then for the second value of the first parameter combined with all values of the second parameter, and so on), you can add several Parametric Sweep nodes, one for each additional parameter except the outermost parameter. COMSOL Multiphysics then treats the parametric

sweeps as a "nested for-loop" and indicates the nested structure using indentations of the **Parametric Sweep** node names. See also Batch Sweeps vs. Cluster Sweeps.

The Batch Sweep is always the outermost sweep. It starts multiple COMSOL Multiphysics batch processes — one for each parameter set in the Batch Sweep node — that solve the current study on your computer given the parameter set.

Once the filename and directory are set, right-click the parent **Study** node and choose **Compute** to start the COMSOL Multiphysics batch processes that compute the current study.

When the batch sweep process starts, the COMSOL Desktop follows the progress in The External Process Window. When the process finishes (or you click the **Detach Job** button to no longer follow the process), an External Process node, one for each parameter, is added under a Batch Data node as in Figure 20-5. The External Process node represents the current running process.

	If you click **Detach Job**, the **Batch Sweep** then no longer synchronizes the solutions and accumulated probe table. To reenable the synchronization, use the **Show All Progress** button in the **Batch Data** node.

	You cannot create another Batch, Batch Sweep, Cluster Sweep, or Cluster Computing in the same study at the same time.

STUDY SETTINGS

The batch sweep is a multiparameter sweep with its parameters solved as a batch job; see Parametric Sweep for more information.

OUTPUT WHILE SOLVING

Use the **Probes** list to select probes to update during the batch sweep. The default is **All**, which selects all probes for plotting and tabulation of probe data. Select **Manual** to open a list with all available probes. Use the **Move Up** ( ), **Move Down** ( ), **Delete** ( ), and **Add** ( ) buttons to make the list contain the probes that you want to see results from while solving. Select **None** to disable probe updating for batch sweep.

Select the **Accumulated probe table** check box to activate the accumulation of probe updates for both the variation on the solver level (time, frequency, and so on) and on the batch sweep level. Use the **Output table** to select where to put the data. Select the **Use all probes** check box if all the model probes should be accumulated in the table. If not selected, the probes selected from the **Probes** list are used.

	No plots are generated automatically from the accumulated probe tables. When a full variation has been accumulated, then the **Format: Filled** is available for the table (see the **Settings** window for **Table**). This format makes it possible to make so-called response surfaces directly from the **Results** view toolbar **Surface Plot** button.

BATCH SETTINGS

Specify the file in which to store the model in the **Filename** field. The directory in which to store the model is the one in the **Batch directory** field on the **Multicore and Cluster Computing** page in the **Preferences** dialog box.

Select the **Generate solver sequence in external process** check box to delay the generation of the solver sequence (for example, to avoid expensive mesh generation on the desktop before submitting the batch job).

From the **Add parameters to filename** list, choose **Parameter name and value** (the default), or choose **Index**, which instead of parameter names and parameter values uses an index scheme `iX`, `iY`, …, where same indices relate to the same parameter value. This option gives much shorter filenames.

Select the **Specify server directory path** check box if you have a floating network license and want to perform this computation using an installation at a remote location. Then specify the directory path in the **Directory** field by typing it directly or clicking the **Browse** button to choose a directory.

Before Sweep

Select the **Clear meshes** check box to clear the meshes before running the batch sweep. The default is to clear the meshes. Select the **Clear solutions** check box to clear the solutions before running the batch sweep. The default is to clear the solutions. These settings are only important if you run a remote computation on a cluster or cloud and want to minimize the size of the file transferred over the network (only available with a floating network license).

During Sweep

Select the **Synchronize solutions** check box to synchronize the solutions computed by the batch processes with the model by taking the results from all the stored files and collecting it in a "master MPH-file" from which we are starting the simulation. This allows additional postprocessing to be performed after the sweep has finished. The setting is similar to the **All** and **Last** settings in the **Memory settings for jobs** for Parametric Sweep. The default is to disable solution synchronization. Select the **Synchronize accumulated probe table** check box to synchronize the accumulated probes computed by the batch processes with the model. The accumulated probe synchronization is enabled by default (collecting this information requires much less memory and time compared to the full solution information).

When the **Synchronize solutions** check box is selected for some models, the batch sweep stores a large amount of files in the directory specified under **Cluster computer settings**. Those files are needed for the synchronization of the solutions.

After Sweep

Select the **Output model to file** check box to enable that all batch processes save the models to file. Selecting this check box ensures that the MPH-files that are automatically saved contain the solution (for each parameter). In most cases, the solution synchronization and probe synchronization functionality should be used instead because otherwise the data ends up in one file for each process and cannot be postprocessed efficiently.

STUDY EXTENSIONS

Select the **Use graphics** check box when the batch process should run results nodes that create graphical contents such as exporting to file. Enter the **Number of simultaneous jobs**. The default is 1. This is the maximum number of batch processes that are allowed to run simultaneously. Enter the **Number of job restarts**. The default is 0. This is the maximum number of times the job can be restarted if it fails to complete. Enter a value for the **Alive time (seconds)**. The default is 300 seconds. This is the longest time the process is allowed to run before it must inform that it is still running. Failure to do so means that the process is considered dead, and a new process is started if the maximum number of job restarts is not reached.

Bidirectionally Coupled Particle Tracing

The **Bidirectionally Coupled Particle Tracing** study ( )¨is used to model the interactions of particle trajectories with stationary fields. The study creates a Time-Dependent Solver that solves for all degrees of freedom related to the particles. All other degrees of freedom are computed using a Stationary Solver. The two solvers are repeated using a For-End For loop so that a self-consistent solution is obtained, taking the bidirectional coupling between the moving particles and stationary fields into account.

See the Time Dependent study step for information about the following sections: **Study Settings**, **Results While Solving**, **Physics and Variables Selection**, **Values of Dependent Variables**, **Mesh Selection**, and **Study Extensions**.

ITERATIONS

Select an option from the **Termination method** list: **Fixed number of iterations** (the default) or **Convergence of global variable**. For **Fixed number of iterations** enter a positive integer for the **Number of iterations** (default 5). Any nodes between this **For** node and the following **End For** node will be repeated a number of times equal to the specified **Number of iterations**.

For **Convergence of global variable** enter the following:

- **Global variable** (default 1)
- **Relative tolerance** (default 0.001)
- **Relative tolerance threshold** (default 1)
- **Maximum number of iterations** (positive integer, default 25)
- **Minimum number of iterations** (positive integer, default 1)

This default solve sequence generated by this study step includes a loop containing the For and End For nodes. The options in this section correspond to the **General** section of the settings window for the **For** node.

USING THE BIDIRECTIONALLY COUPLED PARTICLE TRACING STUDY STEP

In electromagnetics, this study step is used to model particle beams at constant current that are affected significantly by self-fields. In other words, the charge density and current density of the charged particle beam are significantly large enough that they contribute to the electric and magnetic fields in the surrounding domain enough to noticeably perturb the particle trajectories. When tracing particles in a fluid, this study step is used to model the effects of the drag force exerted on the particles and the corresponding body load exerted on the fluid by the particles. This study is available with the Particle Tracing Module.

Bidirectionally Coupled Ray Tracing

The **Bidirectionally Coupled Ray Tracing** study ( ) is used to compute ray trajectories that are affected by external fields. This study solves for all degrees of freedom related to rays using a Time-Dependent Solver. All other degrees of freedom are computed using a Stationary Solver. The two solvers are repeated using a For-End For loop so that a self-consistent solution is obtained, taking the bidirectional coupling between the propagating rays and stationary fields into account.

See the Ray Tracing study step for information about the following sections: **Study Settings**, **Results While Solving**, **Physics and Variables Selection**, **Values of Dependent Variables**, **Mesh Selection**, and **Study Extensions**. See Bidirectionally Coupled Particle Tracing for information about the **Iterations** section.

USING THE BIDIRECTIONALLY COUPLED RAY TRACING STUDY STEP

The study can be used to model thermal lensing effects, in which heat generated by the attenuation of rays in an absorbing medium changes the shape and refractive index of the domain. The changes to refractive index and shape, in turn, affect the ray trajectories. This study is available with the Ray Optics Module.

Cluster Computing

To enable this option in the context menu, click the **Show More Options** button ( ) and select **Batch and Cluster** in the **Show More Options** dialog box.

Use the **Cluster Computing** ( ) study when you want to submit COMSOL Multiphysics batch jobs to a job scheduler that in turn runs the batch job on a second computer or cluster. For more information, see Cluster Computing (Job Configurations) and its related functionality. Also see Figure 20-5.

Use Cluster Computing to utilize a cluster or cloud to solve a single large model using distributed memory. For maximum performance, the COMSOL cluster implementation can utilize shared-memory multicore processing on each node in combination with the Message Passing Interface (MPI) based distributed memory model. This brings a major performance boost by making the most out of the computational power available.

Cluster Computing is also intended as an interface for setting up distributed COMSOL Multiphysics batch jobs on the computer where the COMSOL Desktop is running. If you are running in distributed mode by starting the COMSOL Desktop with a distributed computing command (for example, `comsol -nn 4 -f hostfile`), the **Cluster Computing** node is not needed.

Once you have specified the settings, click **Compute** to start a COMSOL process that solves the current study.

When the cluster computing process starts, the COMSOL Desktop follows the progress in The External Process Window. When the process finishes (or you click the **Detach Job** button to no longer follow the process), an External Process node is selected that represents the current running process. If you are running COMSOL Multiphysics in distributed mode, the model runs in the current process. In this case it is recommended that you do not create a **Cluster Computing** study step.

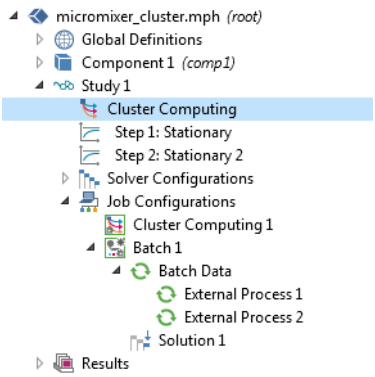

Figure 20-6: An example of the two kinds of Cluster Computing nodes available under Study and Job Configurations.

	Micromixer — Cluster Version: Application Library path: **COMSOL_Multiphysics/Tutorials/micromixer_cluster**

	You cannot create another Batch, Batch Sweep, Cluster Sweep, or Cluster Computing in the same study at the same time.

BATCH SETTINGS

	After making these settings, click the **Save as Default** ( ) button on the **Settings** window toolbar to save the current directory settings as the default preference.

Specify the file in which to store the results of the cluster job in the **Filename** field. The directory in which to store the model is the one in the **Batch directory** field on the **Multicore and Cluster Computing** page in the **Preferences** dialog box.

Select the **Generate solver sequence in external process** check box to delay the generation of the solver sequence (for example, to avoid expensive mesh generation on the desktop before submitting the batch job).

Enter the **Number of nodes** (physical nodes) to use for this job (the default is 1 node).

Select the **Use batch license** check box to run using batch licenses. Batch licenses can be used to run multiple batch jobs for different models that only depend on a parameter. Usually you should use the **Cluster Sweep** node. This option makes it possible submit a single batch job from the COMSOL Desktop and continue working there while the cluster job is computing in the background — this approach works with a license for one concurrent user.

From the **Settings** list, choose **Preference controlled** (the default) to use settings from the **Cluster computing** part of the **Multicore and Cluster Computing** page in the **Preferences** dialog box. Choose **User controlled** to enter the following cluster computing settings:

Choose the **Scheduler type**: **General** (the default), **HPCS 2008/2012/2016**, **OGS/GE**, **SLURM**, **PBS**, or **Not distributed**.

General

Select **General** (the default) to configure to run on many types of clusters and schedulers, including Linux clusters.

- The entry in the **Host file** field specifies the host file used for the job. If left empty, MPD looks for a file `mpd.hosts` in the Linux home directory.
- Select which bootstrap server MPI should use in the **Bootstrap server** setting.
- Enter details for the Directory Settings for all Cluster Types.

HPCS 2008/2012/2016

Select **HPCS 2008/2012/2016** to use the Windows HPC Server 2008, Windows Server 2012 with HPC Pack 2012, and Windows Server 2016 with HPC Pack 2016 job scheduler to submit the batch job.

When **HPCS 2008/2012/2016** is selected:

- The entry in the **Scheduler** field is the IP address of the enterprise adapter of the head node or the DNS name of the head node. The default is `localhost`, and it should only be changed if you submit your job from a different computer than the head node.
- The entry in the **User** field is the user account that COMSOL Multiphysics uses for submitting the job. You provide the password in a separate command window that opens at execution time with the possibility to save the credentials.
- Enter details for the Directory Settings for all Cluster Types.

OGS/GE

Select **OGS/GE** to use the open grid scheduler/grid engine job scheduler to submit the batch job. When **OGS/GE** is selected:

- Select which bootstrap server should be used by MPI using the **Bootstrap server** setting.
- Specify the name of the scheduler queue in **Queue name**.
- Enter the **Queue name** for the cluster queue.
- Enter details for the Directory Settings for all Cluster Types.

SLURM

Select **SLURM** to use the SLURM job scheduler to submit the batch job. When **SLURM** is selected:

- The entry in the **Scheduler** field is the IP address of the enterprise adapter of the head node or the DNS name of the head node. The default is `localhost`, and it should only be changed if you submit your job from a different computer than the head node.

- The entry in the **User** field is the user account that the COMSOL Multiphysics software uses for submitting the job.
- Enter the **Queue name** for the cluster queue.
- Enter details for the Directory Settings for all Cluster Types.

PBS

Select **PBS** to use a PBS-based (Portable Batch System) job scheduler to submit the batch job. When **PBS** is selected:

- The entry in the **Scheduler** field is the IP address of the enterprise adapter of the head node or the DNS name of the head node. The default is `localhost`, and it should only be changed if you submit your job from a different computer than the head node.
- The entry in the **User** field is the user account that the COMSOL Multiphysics software uses for submitting the job.
- Enter the **Queue name** for the cluster queue.
- Enter details for the Directory Settings for all Cluster Types.

Not Distributed

Select **Not distributed** when you want to run a batch job rather than using distributed computing. Enter details for the Directory Settings for all Cluster Types.

Directory Settings for all Cluster Types

- If you are connected to a COMSOL Multiphysics server on another computer, you can control the working directory used by the COMSOL Multiphysics server if you select the **Specify server directory path** check box and enter the path to the server **Directory** or **Browse** for the path to the mounted file system directory where the cluster job result file will be saved. This should be a fully qualified UNC path — for example, `\\head1\shared`. Otherwise, a temporary directory on the COMSOL Multiphysics server is used to save files. The server directory path refers to the location where the COMSOL Multiphysics server reads and writes the corresponding data (assuming a client-server configuration).
- If the batch job has another path to the directory, select the **Specify external COMSOL batch directory path** check box and enter the path to the external process (batch) directory in the **Directory** field or click **Browse**. The cluster job uses this path from the compute node to access the input file and write back the result. On Windows this must be a fully qualified UNC path, for example, `\\head1\shared\clusterprojects`. The external COMSOL batch directory path refers to the location where the batch process reads and writes the data.
- If the COMSOL software is installed in a directory other than where the COMSOL Desktop runs, select the **Specify external COMSOL installation directory path** check box and then specify the installation directory (click **Browse** or enter the path to the **Directory**). This can occur if you are submitting jobs to a job scheduler. Typically on Windows this is the UNC path to the COMSOL installation root directory for the compute nodes to access the required COMSOL binaries — for example, `\\head1\shared\COMSOL55`.

See How to Specify Directory Paths for Batch Jobs and Cluster Jobs for some examples of which paths to specify for some common cluster or batch job configurations.

Additional Batch Settings

Enter the **Number of job restarts**. The default is 0. This is the maximum number of times the job can be restarted if it fails to complete.

Enter a value for the **Alive time (seconds)**. The default is 300 seconds. This is the longest time the process is allowed to run before it must inform that it is still running. Failure to do so means that the process is considered dead, and a new process is started unless the maximum number of job restarts is reached.

CLUSTER SETTINGS

If you are running a parametric sweep and want to distribute it by sending one parameter value to each compute node, select the **Distribute parametric sweep** check box. This requires that your study includes a parametric sweep. In the **Parametric Sweep** node's **Settings** window, you must also select the **Distribute parametric sweep** check box in the **Study Extensions** section.

REMOTE AND CLOUD ACCESS

This settings can be specified here or in the **Preferences** dialog box, on the **Remote Computing** page. From the **Settings** list under **Remote computing settings**, choose **User controlled** to specify the remote computing settings in this section., or choose **Preferences controlled** to use the remote computing settings in the **Preferences** dialog box. The remote computing settings are the same in both places.

Enable the **Run remote** check box if you want to run COMSOL Multiphysics on a remote machine using a remote start command such as SSH and using a file transfer program such as SCP to transfer the files to and from the remote computer. This allows you to run on a machine installed on your network without a client-server connection or on a machine installed on a remote cloud. Then specify the settings described below.

	COMSOL Multiphysics must be installed on the remote machine and all settings must be specified correctly in the **Specify external COMSOL batch directory path** and **Specify external COMSOL installation directory path** settings according to how COMSOL Multiphysics is installed on the remote machine and the remote machines working directories. You must also be able to access the remote machine without a password using the access method selected. This can be achieved by using something that does not require a password, for example, SSH or similar.

Remote Invoke Command

Choose the method for starting COMSOL Multiphysics remotely from the **Remote invoke command** list. You can choose **None**, **SSH**, **Write command to file**, **MPI**, or **User** defined.

For the **SSH** method you can choose between using **SSH**, **Putty**, or a **User** defined SSH command. You can select the SSH commands installation directory in the SSH directory if the SSH command is not available on the PATH. The SSH key file directory is set in the **SSH key file** setting. You can set ports you want to forward in **Forward ports** and the host you want to forward the ports to in **Port host**. This is useful when you have the license manager installed locally, but the machine where COMSOL Multiphysics is running cannot access the license manager; for instance, if the machine is in the cloud. Specify the user name to use on the remote machine with SSH user.

The **Write command to file** method writes all batch command to a file that you specify in the **File with command line** field. This file can then be used to run the command on another computer.

The **MPI** method uses MPI to launch COMSOL batch jobs on the hosts listed in the **Remote hosts** table or file. On Windows, you want to launch `smpd` on the hosts (see Using Microsoft MPI and SMPD on Standalone Computers).

For the **User**-defined **Remote invoke command**, you can enter a command in the **Command** setting. In the **Command** setting, any use of the keyword `{remotehost}` is replaced by the name of the remote host when COMSOL Multiphysics starts.

File Transfer Command

Choose the method for transferring files to the remote computer in **File transfer command**. You can choose **None**, **SCP**, **File list** or **User** defined.

For the **SCP** method, you can choose between using **SCP**, **Putty**, or a **User** defined SCP command. You can select the SCP commands installation directory in **SCP directory** if the SCP command is not available on the PATH. The SCP key file directory is set in the **SCP key file** setting. Specify the user name to use on the remote machine with SCP user.

The **File list** method stores a list of all files that should be transferred to another computer where the batch job runs. In **File with list of files to remote**, it stores a list of all files to transfer to the other computer before running the batch job. In **File with list of files from remote**, it stores a list of all files to transfer from the other computer after the batch jobs have finished. Note that unless you detach, COMSOL Multiphysics will be waiting for the data to be transferred to that remote computer and back and then update its solutions.

For the **User**-defined **File transfer command**, you can enter a command in the **To remote command** for the transfer of files from the local computer to the remote machine and **From remote command** for the transfer of files from the remote machine to the local computer. In the settings, any use of the keyword `{remotehost}` is replaced by the name of the remote host. Any use of the keyword `{localfile}` is replaced by the name of the local file, and any use of the keyword `{remotefile}` is replaced by the name of the remote file.

Remote Hosts

From the **Remote hosts list**, select **Table** if the Remote host list should be read from the **Remote hosts** table or **File** if it should be read from a file.

In the **Remote hosts** table, list the hosts you want to run on. If several hosts are listed, COMSOL Multiphysics allocates a job on the first host that is free. The **Remote hosts file** points to a file on the server side (in a client-server configuration; otherwise, on the current computer) that contains the list of hosts to run on remotely.

Use the **Remote OS** to specify if the remote computer is running the same OS (**Native**) or is running **Linux** or **Windows**.

STUDY EXTENSIONS

Select the **Use graphics** check box when the batch process should run results nodes that create graphical contents such as exporting to file.

Enter the **Number of simultaneous jobs**. The default is 1. This is the maximum number of batch processes that are allowed to run simultaneously.

	You can also make changes to how some of these settings are displayed throughout COMSOL Multiphysics in The Preferences Dialog Box in the **Remote Computing** and **Multicore and Cluster Computing** sections.

	Running COMSOL Multiphysics in Client-Server Mode

Cluster Sweep

To enable this option in the context menu, click the **Show More Options** button ( ) and select **Batch and Cluster** in the **Show More Options** dialog box.

Use the **Cluster Sweep** ( ) study to solve several models in parallel where each model has a different set of Parameters. For example, find the solution to a sequence of stationary or time-dependent simulations that arise when you vary some parameters of interest. The cluster sweep can include multiple independent parameters directly for a full multiparameter sweep (solve for the first value of the first parameter combined with all values of the second parameter, then the second value of the first parameter combined with all values of the second parameter, and so on, or use a specified combination of parameter values).

You can also add another sweep, such as a **Material Sweep** node, to create nested parametric sweeps. The COMSOL Multiphysics software then treats the sweeps as a "nested for-loop" and indicates the nested structure using indentations of the sweep nodes' names. The Cluster Sweep is always the outermost sweep. It starts multiple COMSOL Multiphysics batch processes, one for each parameter set in the **Cluster Sweep** node, which solve the current study on your cluster given the parameter set by submitting COMSOL Multiphysics batch jobs to a job scheduler that in turn runs the batch job on a second computer or cluster.

For more information, see Cluster Computing (Job Configurations) and its related functionality. If you used a distributed computing command to launch COMSOL Desktop, you do not need to create a **Cluster Sweep** study step. See also Batch Sweeps vs. Cluster Sweeps.

!	You cannot create another Batch, Batch Sweep, Cluster Sweep, or Cluster Computing in the same study at the same time.

Right-click the **Study** node to add a **Cluster Sweep** study node to run batch jobs on a cluster. Once you have specified the settings, right-click the main **Study** node and select **Compute** in order to start a COMSOL Multiphysics batch process that solves the current study for the given parameter sets.

When the cluster sweep process starts, the COMSOL Desktop follows the progress in The External Process Window. When the process finishes (or you click the **Detach Job** button to no longer follow the process), an External Process node, one for each parameter, is added under a Batch Data node as in Figure 20-5. The External Process node represents the current running process.

Click the **Save as Default** button ( ) in the **Settings** window toolbar to save the current setting as default. If you are running COMSOL Multiphysics in distributed mode, the model runs in the current process.

STUDY SETTINGS

The cluster sweep is a multiparameter sweep with its parameters solved as a distributed batch job; see Parametric Sweep for more information about parameter sweeps.

OUTPUT WHILE SOLVING

	This section is not available if the study also contains a Parametric Sweep.

Use the **Probes** list to select probes to update during the batch sweep. The default is **All**, which selects all probes for plotting and tabulation of probe data. Select **Manual** to open a list with all available probes. Use the **Move Up** ( ), **Move Down** ( ), **Delete** ( ), and **Add** ( ) buttons to make the list contain the probes that you want to see results from while solving. Select **None** to disable probe updating for batch sweep.

Select the **Accumulated probe table** check box to activate the accumulation of probe updates for both the variation on the solver level (time, frequency, and so forth) and on the batch sweep level. Use the **Output table** to select where to put the data. Select the **Use all probes** check box if all the model probes should be accumulated in the table. If not checked, the probes selected from the **Probes** list are used.

	No plots are generated automatically from the accumulated probe tables. When a full variation has been accumulated, then the **Format: Filled** is available for the table (see the **Settings** window for **Table**). This format makes it possible to make response surfaces directly from the **Results** view toolbar **Surface Plot** button.

BATCH SETTINGS

Except for the information below, see Batch Settings (for the Cluster Computing node) for details.

Before Sweep

Under **Before sweep**, the **Clear meshes** check box is selected by default to clear the meshes before running the batch sweep. The **Clear solutions** check box is selected by default to clear the solutions before running the batch sweep. Click to clear one or both of the check boxes as needed.

During Sweep

Under **During sweep**, click to select the **Synchronize solutions** check box to synchronize the solutions computed by the batch processes with the model. This allows additional analysis to be performed after the sweep has finished.

The setting is similar to the **All** and **Last** setting in **Memory settings for jobs** for a **Parametric Sweep**.

The **Synchronize accumulated probe table** check box is selected by default to synchronize the accumulated probes computed by the batch processes with the model (collecting this information requires much less memory and time compared to the full solution information). Click to clear the check box if required.

After Sweep

Under **After sweep**, select the **Output model to file** check box to enable that all batch processes save the models to file. Selecting this check box ensures that the MPH-files that are automatically saved contain the solution (for each parameter). In most cases, the solution synchronization and probe synchronization functionality should be used instead because otherwise the data ends up in one file for each process and cannot be postprocessed efficiently.

REMOTE AND CLOUD ACCESS

See Remote and Cloud Access described for Cluster Computing.

STUDY EXTENSIONS

See Study Extensions described for Cluster Computing.

Function Sweep

The **Function Sweep** (f(x)) study step is a special case of Parametric Sweep study step, where the solver sweeps over functions defined under a **Switch** node defined under **Global Definitions>Functions** (see Switch for Functions). After running a function sweep, you can select from the swept functions from a **Switch** list in the **Data** section of plot nodes to, for example, postprocess and visualize the function sweep.

STUDY SETTINGS

Add information to the table for each column: **Switch**, **Cases**, and **Case numbers**. Use the **Move Up** ( ), **Move Down** ( ), **Add** ( ), and **Delete** ( ) buttons under the table to organize the data. Use the **Add** ( ) button to add a list of existing function **Switch** nodes in the **Switch** column. From the list under **Cases**, select **All** to sweep over all function nodes under the switch. For **User defined**, define a list of functions to switch between as positive integers, representing the first function from the top under the **Switch** node as 1, the second function as 2, and so on.

OUTPUT WHILE SOLVING

See Parametric Sweep for these settings.

Material Sweep

The **Material Sweep** ( ) study step is a special case of Parametric Sweep, where the solver sweeps over materials defined under a **Switch** node defined under **Global Definitions>Materials** (see Switch for Materials). After running a material sweep, you can select from the swept materials from a **Switch** list in the **Data** section of plot nodes, for example, to postprocess and visualize the material sweep (solutions for the different materials that the sweep includes).

STUDY SETTINGS

Add information to the table for each column: **Switch**, **Cases**, and **Case numbers**. Use the **Move Up** ( ), **Move Down** ( ), **Add** ( ), and **Delete** ( ) buttons under the table to organize the data. Use the **Add** ( ) button to add a list of existing material **Switch** nodes in the **Switch** column. From the list under **Cases**, select **All** to sweep over all material nodes under the switch. For **User defined**, define a list of materials to switch between as positive integers, representing the first material from the top under the **Switch** node as 1, the second function as 2, and so on.

OUTPUT WHILE SOLVING

See Parametric Sweep for these settings.

Modal Reduced-Order Model

The **Modal Reduced-Order Model** ( ) study step is used for exporting reduced-order model matrices.

You can add a Modal Reduced-Order Model study step for exporting the reduced order model matrices after an Eigenfrequency study step for computing the eigenfrequencies and eigenmodes of a linear or linearized model in the frequency domain.

A Modal Reduced-Order Model study step uses the Modal Solver. It uses the transient equation form for the export. The matrices can be accessed through the COMSOL Multiphysics API or in table format from a System Matrix derived value.

!	The **Modal Reduced-Order Model** is a legacy feature. You are advised to use the Frequency Domain, Modal Reduced-Order Model or Time Dependent, Modal Reduced-Order Model studies to obtaine matrices for reduced models.

Multigrid Level

To enable this option in the context menu, click the **Show More Options** button ( ) and select **Multigrid Level** in the **Show More Options** dialog box. Then right-click any of the **Study Step** nodes to add a **Multigrid Level** ( ) node, which specifies the geometric multigrid level used by the study.

PHYSICS SELECTION

Select a **Physics interface**. In the **Discretization** list, you can specify which discretization to use (defined in the main physics interface's **Settings** window or in any added **Discretization** node; see Discretization (Node)). Changing the discretization can affect the discretization order used by this study. You have to add the discretization you want to use in the physics interface.

MESH SELECTION

Select a mesh to use for each geometry in the study. First select the **Geometry** from the list and then select the **Mesh** from the list.

Parametric Sweep

Use a **Parametric Sweep** ( ) study to find the solution to a sequence of stationary or time-dependent problems that arise when you vary some parameters of interest. The parametric sweep can include multiple independent parameters directly for a full multiparameter sweep (solve for the first value of the first parameter combined with all values of the second parameter, then the second value of the first parameter combined with all values of the second parameter, and so on, or use a specified combination of parameter values). You can also add more than one **Parametric Sweep** node to create nested parametric sweeps. The inner sweep in a nested parametric sweep can also be another type of sweep, such as a sweep over materials by adding a **Material Sweep** node below the **Parametric Sweep** node. The program then treats the parametric sweeps as a "nested for-loop" and indicates the nested structure using indentations of the sweep nodes' names.

	See Table Surface for information about how to plot the variation of some quantity as a function of two parameters as a 2D surface plot where you vary two parameters and fix the others.

	It is only possible to use one Sensitivity, Optimization, or Parametric Sweep study step feature in any study, unless there is an **Optimization** study step that uses a derivative-free method (Nelder-Mead, Monte Carlo, BOBYQA, COBYLA, or Coordinate search), in which case you can combine the **Optimization** study step with one or more **Parametric Sweep** study steps.

The **Settings** window has the following sections:

STUDY SETTINGS

Use the **Sweep type** list to specify the type of sweep to perform. The **Specified combinations** type (the default) solves for a number of given combinations of values, while the **All combinations** type solves for all combinations of values. Using all combinations can lead to a very large number of solutions. The **Parameter switch** type makes it possible to run sweeps over selected parameter groups and associated parameter cases (see Parameters and Parameter Cases). Using the **Parameter switch** sweep type, you can run specified sweeps for all or selected parameter cases for a parameter group, and if you have more than one parameter group, you might want to compute all combinations of these groups. You can do so by setting up a complete parameter list as an outer sweep with all parameter groups and their parameter cases in the parameter switch table (see below). The **Parameter switch** sweep type can also be combined with other parametric sweeps using any sweep type.

For **Specified combinations** and **All combinations**, use the table with **Parameter name**, **Parameter value list**, and (optional) **Parameter unit** to specify parameter names, values, and units for the parametric solver. Use the **Add** button ( ) to add a row to the table. Each row has one parameter name, a corresponding parameter value list, and an optional unit. The unit becomes orange if the unit that you specify does not match the unit given for the parameter where it is defined. For the **Specified combinations** sweep type, the list of values must have equal length. When you click in the **Parameter value list** column to define the parameter values, you can click the **Range** button ( ) to define a range of parameter values. The parameter unit overrides the unit of the global parameter. If no parameter unit is given, parameter values without explicit dimensions are considered dimensionless.

For **Parameter switch**, add parameters to switch by clicking the **Add** button ( ) to add a **Parameters** node in the **Switch** column for which to switch its parameters. In the **Cases** column, choose the parameter cases to include. The default is **All** (also when there are no parameter cases); choose **User defined** to specify the parameter cases to include

under **Case numbers**. Then, during postprocessing, you can choose from the specified case numbers in lists for the added **Parameters** nodes under the **Dataset** list in the **Data** sections for plots and data evaluations. Use the **Move Up** ( ), **Move Down** ( ), and **Delete** ( ) buttons as needed to rearrange the list of **Parameters** nodes for a parameter switch.

	The list of parameters in the **Parameter name** column contains parameters from **Parameters** nodes where the **Show in parameter selections** check box is selected.

If more than one parameter name have been specified, the lists of parameter values are interpreted as follows: Assume that the parameter names are `p1` and `p2`, and that `p1` has the list 1 3 and `p2` has the list 2 4. For the **Specified combinations** sweep type, the solver first uses `p1` equal to `1` and `p2` equal to `2`. Thereafter, it uses `p1` equal to `3` and `p2` equal to `4`. And when the sweep type is **All combinations**, the solver uses the following order for the parameter combinations: 1 2, 1 4, 3 2, and 3 4.

An alternative to specifying parameter names and values directly in the table is to specify them in a text file. Use the **Load from File** button ( ) to browse to such a text file. The program appends the read parameter names, values, and units to the current table. The format of the text file must be such that the parameter names appear in the first column, and the values for each parameter appear in the next columns (separated with a space), row-wise enclosed with quotation marks and with spaces separating the values (such as `"1 3 5"`). Finally (separated by a space), the format includes an optional unit using unit syntax such as `[m/s]`. Click the **Save to File** button ( ) to save the contents of the table to a text file (or to a Microsoft Excel Workbook spreadsheet if the license includes LiveLink™ *for* Excel®).

	The loading and saving of parameter table data using Excel includes the units in the **Parameter unit** column. The unit column is ignored when saving and loading parameter data to `*`.txt, `*`.csv, and `*`.dat files.

OUTPUT WHILE SOLVING

Select the **Plot** check box to allow plotting of results while solving. Then select what to plot from the **Plot group** list. The software plots the dataset of the selected plot group as soon as the results become available.

Use the **Probes** list to select probes to update during the parametric sweep. The default is **All**, which selects all probes for plotting and tabulation of probe data. Select **Manual** to open a list with all available probes. Use the **Move Up** ( ), **Move Down** ( ), **Delete** ( ), and **Add** ( ) buttons to make the list contain the probes that you want to see results from while solving. Select **None** to disable probe updating for parametric sweep. Note that the control of tables and plot windows is done using the probe settings.

	If a probe is updated on the **Parametric Sweep** level and also through another solution process (for example, a time-dependent simulation) this probe is not updated at the **Parametric Sweep** level. When the probes themselves (not the probe expression) depend on model parameters, the update of these probes is only correct for parameter sweeps that are done through outer parametric sweeps (not by a parametric solver). Outer parametric sweeps are performed by a **Parametric** node under **Job Configurations**. COMSOL Multiphysics currently does not autodetect model parameters in probes, so you might want to select **Off** from the **Use parametric solver** list in the **Study Extensions** section for the **Parametric Sweep** study node.

Select the **Accumulated probe table** check box to activate the accumulation of probe updates for both the variation on the solver level (time, frequency, and so forth) and on the parametric sweep level. Use the **Output table** to select

where to put the data. Select the **Use all probes** check box if all the model probes should be accumulated in the table. If not selected, the probes selected from the **Probes** list are used.

	No plots are generated automatically from the accumulated probe tables. When a full variation has been accumulated, then the **Format: Filled** is available for the table (see the **Settings** window for **Table**). This format makes it possible to modify the table data and make so-called response surfaces directly from the **Results** view toolbar **Surface Plot** button. Also, if the **Use parametric solver** setting is **Automatic** and the solver decides to use the parametric solver instead of a parametric sweep, an accumulated probe table is not created.

From the **Default solver sequence generation** list you can control when a solver sequence should be generated during a parametric sweep (see also the settings for the Solution node under **Job Configurations**):

- Choose **Using global parameters** (the default).
- Choose **Using first parameter tuple**, **Using last parameter tuple**, or **Using each parameter tuple** to instead use the first tuple (set) of parameter values, the last tuple of parameter values, or each tuple of parameter values to control when a solver sequence should be generated.

  By default, the solver sequence builds meshes based on the values of the global parameters. These meshes can then influence the generated solver sequence. In some cases, the global parameter values could lead to invalid meshes. Also, the solver sequence is, in the default case, optimized for the global parameter values, which could lead to another choice of solver than the preferred solver. Using one of the other available options in the **Default solver sequence generation** list can avoid such behavior.

You can use the **Keep solutions in memory** list under **Memory settings for jobs** to control how to store the solutions from the individual parametric sweep solutions. Select **All** to store all the parametric sweep solutions in memory, or select **Only last** to store only the last solution from the parametric sweep. If you select **Only last** and the parametric solver is used, all solutions are kept in memory. When only the last solution is stored, you can also select the **Save each solution as model file** check box. It stores the separate parametric sweep solutions and their corresponding models in separate MPH-files. Enter a filename in the **Filename** field or click **Browse** to choose a name and location for the model files. You can also use probes to collect some solution values of interest during the sweep rather than storing all solutions, which can save memory and solution time.

	To make sure that each solution is saved as a Model MPH-file, select **Off** from the **Use parametric solver** list in the **Study Extensions** section (see below). With that setting, the solver uses an outer sweep instead of an inner sweep, and it is then possible to save each solution to file.

STUDY EXTENSIONS

From the **Use parametric solver** list, select one of the following options:

- **Automatic** (the default) to generate a **Parametric** job configuration, unless the problem and parameters are such that the parametric sweep can be realized through a **Stationary Solver** with a **Parametric** solver subnode ( ), which is more efficient.
- **Off** to always generate a **Parametric** job configuration.

If you are running a parametric sweep and want to distribute it by sending one parameter value to each compute node, select the **Distribute parametric sweep** check box. To enable this option, click the **Show More Options** button ( ) and select **Solver and Job Configurations** in the **Show More Options** dialog box. Note that if the **Distribute parametric sweep** check box is selected, **Solution** under **Initial values of variables solved for** in the **Values of Dependent**

Variables section in the study step node's settings cannot be set to **Current**. Each node is assigned disjoint sets of parameters; hence, the initial solution is undefined for all nodes other than the first.

	To reduce the size of MPH-files for models using parametric sweeps, you have the option of storing only the last solution in the sweep in the file. If you want to use this setting as the default, open the **Preferences** dialog box and click **Parametric Sweep**. Then choose **Only last** from the **Keep solutions in memory** list. You then have the further option of saving each solution as a model file. To do this, select the **Save each solution as model file** check box and then enter a filename in the **Filename** field, or click **Browse** to choose a name and location for the model files. The default option in the **Keep solutions in memory** list, **All**, stores all solutions in the file.

	• Probes • Stationary for information about the continuation parametric solver versus parametric sweeps. • Job Configurations • Using a Job Configuration to Store Parametric Results on File

Sensitivity

To enable this option in the context menu, click the **Show More Options** button ( ) and select **Sensitivity** in the **Show More Options** dialog box.

Use the **Sensitivity** ( ) study step to add a sensitivity analysis to the study. Using a Sensitivity study node, you can add sensitivity functions at the study level and use model parameters as global control variables. Compared to The Sensitivity Interface, the Sensitivity study step has these capabilities:

- Model parameters can act as global control variables.
- Sensitivity functions can be added at the study level.
- Sensitivity functions and variables from physics interfaces can be used on the study level.

	It is only possible to use one of the Sensitivity, Optimization, or Parametric Sweep study steps in any study.

	• Theory for the Sensitivity Interface for a general introduction to sensitivity analysis. • Postprocessing Sensitivities for information about the postprocessing operators `fsens`, `fsensimag`, and `sens`.

	Sensitivity Analysis of a Communication Mast Detail: Application Library path **COMSOL_Multiphysics/Structural_Mechanics/mast_diagonal_mounting_sensitivity**.

The **Settings** window has the following sections:

SENSITIVITY METHOD

Choose a method from the **Gradient method** list: one of the analytical methods **Forward** or **Adjoint** (the default). See Choosing a Sensitivity Method for information about the forward and adjoint methods. These methods have similar limitations as the gradient-based optimization methods (SNOPT and Levenberg-Marquardt). For example,

nonanalytic functions are not correctly treated. Also, when model parameters are used in the geometry or mesh, the sensitivity is not correctly computed.

You choose the study step to use from the **Study step** list, which contains **None** and any supported study steps in the study. The supported study step types are Stationary, Time Dependent, and Frequency Domain.

OBJECTIVE FUNCTION

You specify the objective function for the optimization problem in the table's **Expression** column. Enter any globally available expression that evaluates to a real number. Optionally, you can add a description in the **Description** column. Click the **Add Expression** (+) and **Replace Expression** ( ) buttons to search through a list of predefined expressions.

	For a sensitivity objective that is expressed in terms of the solution u of a PDE (or in terms of control variables), Integration is one example of how you can define a scalar objective as required by the sensitivity solver. The evaluation of the objective function is similar to Global Variable Probe, so any variable that can be represented by a global variable probe is suited as an objective.

Multiple Objectives

If you have defined more than one objective function, choose how to evaluate the overall objective: For sensitivity studies, only **Sum of objectives** is available.

Solution

Here you select the evaluation method of the objective function when several solutions are present, like for Time Dependent studies. For sensitivity studies, only **Auto** is available. The solver chooses the evaluation method based on the innermost study. For studies in the Frequency Domain, the contributions from all solutions are summed (equivalent to the **Sum of objectives** option). For a Time Dependent study, the optimization solver selects the last solution (final time).

CONTROL VARIABLES AND PARAMETERS

The table under **Control Variables and Parameters** is used to define control variables. In this table you can select all parameters defined in the **Global Definitions>Parameters** node's **Settings** window through the **Add** (+) button.

From a list in the **Parameter name** column, select the parameter to define as a control variable. You can then give it a value and scale as a control variable in the **Value** and **Scale** columns, respectively. If the control value is complex-valued, select **Complex** from the list in the **Value type** column (the default is **Real**).

Move control parameter rows up and down using the **Move Up** (↑) and **Move Down** (↓) buttons. To remove a control parameter, select some part of that parameter's row in the table and click the **Delete** button ( ).

You can also save the definitions of the control parameters to a text file by clicking the **Save to File** button ( ) and using the **Save to File** dialog box that appears. To load a text file with control variables, click the **Load from File** button ( ) and use the **Load from File** dialog box that appears. Data must be separated by spaces or tabs.

	The tables to activate or deactivate objective functions and control variables in the model are only visible if those functions or variables are present in the model.

	If you have the LiveLink™ *for* Excel®, you can also save and load control variables to and from Microsoft Excel Workbook (*.xlsx) files.

Bolt Pretension

The **Bolt Pretension** ( ) study step is a special case of a **Stationary** study step, where the special degrees of freedoms used for modeling prestressed bolts are solved for. In all other study types, these degrees of freedom are inactive. Typically, you include a **Bolt Pretension** study step as the first step in a study in order to simulate the state after the assembly of a bolted joint. You can the add any other types of study steps for computing the effects of the service loads.

Boundary Mode Analysis

The **Boundary Mode Analysis** ( ) study and study step are used to compute the propagation constants or wave numbers as well as propagating mode shapes, for a given frequency at a port.

As a study, the Boundary Mode Analysis combines a Boundary Mode Analysis study step at a port (boundary) (which can represent, for example, a cross section of a waveguide) with a Frequency Domain study step for the full geometry.

This study is available with the Electromagnetic Waves, Frequency Domain and Microwave Heating interfaces, which both require the RF Module, and the Electromagnetic Waves, Frequency Domain; Electromagnetic Waves, Beam Envelopes; and Laser Heating interfaces, which all require the Wave Optics Module.

The Boundary Mode Analysis study step's **Settings** window contains the following sections:

STUDY SETTINGS

Select a method to **Transform**: **Effective mode index** (the default), **Out-of-plane wave number**, or **None**.

Enter a **Port name** if applicable. The default is 1.

Enter a value or expression for the **Mode analysis frequency**. The default frequency is 1 GHz.

From the **Mode search method** list, select a search method:

- **Manual** (the default), to specify some search criteria manually. See Manual Mode Search Settings below.
- **Region**, to define a mode search region in a complex plane. See Mode Search Region Settings below.

Manual Mode Search Settings

Use the **Desired number of modes** field to specify the number of modes you want the solver to return (default: 1).

In the **Search for modes around** field, you can specify a value or expression around which the eigenvalue solver should look for solutions to the eigenvalue equation (default: 1).

Use the **Mode search method around shift** list to control how the eigenvalue solver searches for modes around the specified shift value:

- Select **Closest in absolute value** (the default value) to search for modes that are closest to the shift value when measuring the distance as an absolute value.
- Select **Larger real part** to search for modes with a larger real part than the shift value.
- Select **Smaller real part** to search for modes with a smaller real part than the shift value.
- Select **Larger imaginary part** to search for modes with a larger imaginary part than the shift value.
- Select **Smaller imaginary part** to search for modes with a smaller imaginary part than the shift value.

Mode Search Region Settings

Use the **Approximate number of modes** field to specify the approximate number of modes you want the solver to return (default: 20).

In the **Maximum number of modes** field, you can specify a maximum number of modes to limit the eigenvalue solver's search for additional modes (default: 200).

The **Perform consistency check** check box is selected by default to increase confidence that the solver finds all modes in the search region.

Under **Search region**, you define the size of the search region for modes as a rectangle in the complex plane by specifying the **Smallest real part**, **Largest real part**, **Smallest imaginary part**, and **Largest imaginary part** in the respective text fields. The search region also works as an interval method if the **Smallest imaginary part** and **Largest imaginary part** are equal; the eigenvalue solver then only considers the real axis and vice versa.

	The Boundary Mode Analysis study step stores the frequency f_{ref} and propagation constant β_{ref} for which it was run. For a TE, TM, or TEM mode, the propagation constant β for an arbitrary frequency f is given by $$\beta^2 = \beta_{\mathrm{ref}}^2 + k^2(1-(f_{\mathrm{ref}}/f)^2).$$ In addition, for TE, TM, and TEM modes, the mode field shape is independent of the frequency. Thus, when making a frequency sweep including only TE, TM, and TEM modes, the Boundary Mode Analysis study steps can be done for just one frequency, with the propagation constants obtained from the expression above for the other frequencies. For waveguides consisting of multiple dielectric materials, like optical fibers, where there are no TE, TM, or, TEM modes, the Boundary Mode Analysis steps must be recomputed for each frequency.

	The **Include geometric nonlinearity** check box, **Mesh Selection**, and **Study Extensions** are described in Common Study Step Settings. There is also detailed information in the Physics and Variables Selection and Values of Dependent Variables sections.

	• With the RF Module, see *Polarized Circular Ports*, Application Library path **RF_Module/Tutorials/polarized_circular_ports**. • With the Wave Optics Module, see *Dielectric Slab Waveguide*, Application Library path **Wave_Optics_Module/Verification_Examples/dielectric_slab_waveguide**.

TEM Boundary Mode Analysis

The **TEM Boundary Mode Analysis** ( ) study and study step are used to compute static electric potential or out-of-plane component of magnetic vector potential to define the mode field shapes at all TEM type ports. This is a preprocessing step that must be solved before solving the main study step such Frequency Domain.

As a study, the TEM Boundary Mode Analysis combines a TEM Boundary Mode Analysis study step at ports (boundaries) (which can represent, for example, a cross section of a waveguide) with a Frequency Domain study step for the full geometry.

Coil Geometry Analysis

The **Coil Geometry Analysis** ( ) study is used to compute the current flow of a **Coil** feature in 3D models. This is a preprocessing step that must be solved before solving the main study step (which can be, for example, Stationary or Frequency domain).

The **Coil Geometry Analysis** study and study step are available for 3D models using the Magnetic Fields interface and the **Coil** node (which requires the AC/DC Module). Use it to solve for the current flow in all Coil nodes that:

- have the **Conductor model** parameter set to **Single conductor**, modeling a massive, solid conductor, or
- have the **Conductor model** set to **Homogenized multi-turn** and the **Coil type** set to **Numeric**. It gives the current density equivalent to that produced by a bundle of conductive wires in series.

The best results are obtained when the coil has a smoothly varying or constant cross section without sharp bends and bottlenecks. The local current directions are solved for by the specialized **Coil Geometry Analysis** study step.

The **Geometry Analysis** subnode to the **Coil** feature automatically appears to set up the automatic computation of the current flow in the coil. The boundary conditions for the **Geometry Analysis** are specified using the **Input** and **Output** subnodes available with the node. For information about the use of this study and its functionality, see the *AC/DC Module User's Guide*.

	The **Mesh Selection** and **Study Extensions** (Adaptive Mesh Refinement) described in Common Study Step Settings. There is also detailed information in the Physics and Variables Selection and Values of Dependent Variables sections.

	With the AC/DC Module, see *Multi-Turn Coil Above an Asymmetric Conductor Plate*, Application Library path **ACDC_Module/Inductive_Devices_and_Coils/multiturn_coil_asymmetric_conductor**.

Electrochemistry Studies and Study Steps

The AC Impedance, Stationary, AC Impedance, Time Dependent, and Cyclic Voltammetry studies are available with the Battery & Fuel Cells Module, Corrosion Module, Electrochemistry Module, or Electrodeposition Module.

The Time-Dependent with Initialization and Time-Dependent with Initialization, Fixed Geometry studies are available with the Electrodeposition Module or Corrosion Module.

AC IMPEDANCE, INITIAL VALUES

The **AC Impedance, Initial Values** ( ) study is used for electrochemical impedance spectroscopy (EIS) computations in electrochemical cells.

The study consists of a single Frequency Domain Perturbation study step, which solves for a harmonic linear perturbation. Use this study for electrochemical cells when the steady state solution is known a priori. The outputs are Nyquist and Bode plots for selected electrodes over the specified frequency range.

AC IMPEDANCE, STATIONARY

The **AC Impedance, Stationary** ( ) study is used for electrochemical impedance spectroscopy (EIS) computations in electrochemical cells.

The study consists of two study steps: a Stationary study step followed by a Frequency Domain Perturbation study step, which solves for a harmonic linear perturbation of the stationary nonlinear solution. The outputs are Nyquist and Bode plots for selected electrodes over the specified frequency range.

	With any of these modules — Battery & Fuel Cells Module, Corrosion Module, Electrochemistry Module, or Electrodeposition Module — see the *Electrochemical Impedance Spectroscopy* example available from the respective Application Libraries.

AC IMPEDANCE, TIME DEPENDENT

The **AC Impedance, Time Dependent** ( ) study is used for electrochemical impedance spectroscopy (EIS) computations in electrochemical cells.

The study consists of two study steps: A Time Dependent study step followed by a Frequency Domain Perturbation study step, which solves for an harmonic perturbation of the time-dependent solution at the last time step. This study can be used for systems that do not have a steady solution, for example batteries. The outputs are Nyquist and Bode plots for selected electrodes over the specified frequency range.

	Harmonic Perturbation, Prestressed Analysis, and Small-Signal Analysis

CYCLIC VOLTAMMETRY

The **Cyclic Voltammetry** ( ) study is used for transient computations of voltammetry experiments together with the Electroanalysis interface.

When this study is added, a **Cyclic Voltammetry** study step is added to the Model Builder. The study step sets up a time-dependent solver. The initial and maximum time step solver settings are based on the settings in the Electroanalysis interface, and a Stop Condition is added to the solver to stop the simulation at the end of the voltammetry cycling. The settings are described for the Time Dependent node.

	If the Electroanalysis interface does not contain any Electrode Surface node with active Cyclic Voltammetry settings, no stop conditions are added to the solver. Voltammetry simulations can also be performed using a Time Dependent study step.

	With any of these modules — Battery & Fuel Cells Module, Corrosion Module, Electrochemistry Module, or Electrodeposition Module — see the *Cyclic Voltammetry at a Macroelectrode in 1D* example available from the respective Application Libraries.

STATIONARY WITH INITIALIZATION

The **Stationary with Initialization** study is used for stationary electrochemical problems. The study consists of two study steps: a Current Distribution Initialization study step, which solves for the potential fields only, followed by a second stationary study step, for which the field computed by the first study step is used as initial values.

TIME-DEPENDENT WITH INITIALIZATION

The **Time-Dependent with Initialization** ( ) study can be used to perform transient simulations of electrochemical cells. The study adds a Current Distribution Initialization study step and Time Dependent study step to the study node. The Current Initialization step solves for the electrode and electrolyte potentials as well as all global ODE dependent variables. All other dependent variables in the model, such as concentrations and electrode deformation, are set to the initial values in this step. The Time Dependent step performs a transient simulation for all dependent variables in the model, using the result of the first study step as initial values. See the study steps for settings information.

TIME-DEPENDENT WITH INITIALIZATION, FIXED GEOMETRY

Use the **Time-Dependent with Initialization, Fixed Geometry** ( ) study to exclude geometry deformation effects from a model. The study is similar to the Time-Dependent with Initialization study, with the difference that the second time-dependent study step does not solve for the geometry deformation dependent variables. This study adds a Current Distribution Initialization study step and Time-Dependent, Fixed Geometry study step to the study node. See the study steps for settings information.

CURRENT DISTRIBUTION INITIALIZATION

The **Current Distribution Initialization** ( ) study step is added to the Stationary with Initialization; Time-Dependent with Initialization, Fixed Geometry; and Time-Dependent with Initialization studies. You can use this study step as an initialization step for the electric and electrolyte potentials in a simulation of an electrochemical cell. The Current Distribution Initialization study step is typically followed by a study step that solves for all dependent variables.

The study step solves for a stationary solution of the potential dependent variables of the model only, which implies that for concentration dependent (tertiary) problems, the concentration will be equal to their corresponding initial while solving this study step. The **Current distribution type** setting can be set to either **Primary** (the default) or **Secondary.** If the **Current Distribution type** has been set to **Primary** (which is the default), potential constraints are used, based on the equilibrium potential of the Electrode Reaction or Porous Electrode Reaction nodes in the Electrochemistry interfaces. Note that this means that if you are using user-defined electrode kinetics expressions, you need to also provide equilibrium potential values for the Current Distribution Initialization to work properly when set to **Primary**. The **Primary** step will usually result in a linear problem that converges in one iteration only, regardless of the settings of the **Initial Values** for the potential variables.

For the Primary case, and if multiple Electrode Reactions or Porous Electrode Reactions are used on the same boundary/domain, you can select if the equilibrium potential of the first reaction node or the average should be used for setting up the initialization constraint by using the settings in the Equilibrium Potential Handling (Primary Condition) section in the Electrode Surface or Porous Electrode nodes.

The **Secondary** setting may need to be used for problems where the ohmic drop in the electrolyte is negligible, such as in cathodic protection, mixed potential, or thin wafer deposition with lateral electronic conduction problems. When using a **Secondary** initialization, the **Initial Values** settings of the potential values may be crucial for convergence.

The remaining settings available for this study step are described for the Stationary node.

	With the Electrodeposition Module, see *Electrodeposition on a Resistive Patterned Wafer*, Application Library path **Electrodeposition_Module/Tutorials/resistive_wafer**.

TIME-DEPENDENT, FIXED GEOMETRY

The **Time-Dependent, Fixed Geometry** ( ) study step is added to the Time-Dependent with Initialization, Fixed Geometry study. Use it to exclude the deformation/ALE (X, Y, Z) variables from the variables that are solved for by the study step. This is a suitable study step if you want to simulate a time-dependent electrodeposition or corrosion problem for cases when the mesh deformation is expected to be small. The settings available for this study step are described for the Time Dependent node.

Fatigue

The **Fatigue** ( ) study is a dedicated study for fatigue evaluation. It processes a load cycle and evaluates a fatigue criterion specified in the Fatigue interface. Before a Fatigue study can be calculated, a load cycle must be simulated. This is done in a Stationary or a Time Dependent study step by simulating structural response to several loading events.

For more information see the *Fatigue Module User's Guide*.

	The following applies if you have the Multibody Dynamics Module and want to evaluate fatigue. If the load cycle is simulated using the Multibody Dynamics interface, use the Stationary study instead of the Fatigue study to perform fatigue analysis. The use of a Stationary study in this case is necessary because of how the geometric nonlinearity is evaluated.

Frequency Domain Perturbation

The **Frequency Domain Perturbation** ( ) study step is used for studying small oscillations about a biased solution (small-signal analysis).

This study step is useful for small-signal analysis (AC/DC), prestressed analysis (structural mechanics), and harmonic perturbation (fluid flow) types of analyses.

	This study step is part of some two-step studies (see below).

When this study step is added to the Model Builder as part of a two-step study, the first step is usually a **Stationary** study step that computes the stationary (or bias) solution. The second step is the **Frequency Domain Perturbation** step, which computes a perturbed solution of the linearized problem around the linearization point (or bias point) computed in the first step. The settings are the same as those for the Stationary and Frequency Domain nodes.

This study step is available for a variety of interfaces and licenses:

- As a study step with the AC Impedance, Stationary and AC Impedance, Time Dependent studies, which require the Batteries & Fuel Cells Module or the Electrodeposition Module.
- As a study step with the Frequency Domain, Prestressed study, which requires the Structural Mechanics Module, Geomechanics Module, MEMS Module, or Acoustics Module (depending on which physics interface you use it for).
- As a study step for the Small-Signal Analysis, Frequency Domain study, which requires the AC/DC Module or MEMS Module.

	Harmonic Perturbation, Prestressed Analysis, and Small-Signal Analysis

	• With the AC/DC Module, see *Small-Signal Analysis of an Inductor*, Application Library path **ACDC_Module/Inductive_Devices_and_Coils/small_signal_analysis_of_inductor**. • With the Acoustics Module and AC/DC Module, see *Loudspeaker Driver — Frequency-Domain Analysis*: Application Library path **Acoustics_Module/Electroacoustic_Transducers/loudspeaker_driver**. • With the Batteries & Fuel Cells Module, see *Electrochemical Impedance Spectroscopy in a Fuel Cell*, Application Library path **Batteries_and_Fuel_Cells_Module/Fuel_Cells/ac_fuel_cell**. • With the MEMS Module, see *Frequency Response of a Biased Resonator — 2D*, Application Library path **MEMS_Module/Actuators/biased_resonator_2d_freq**. • With the Structural Mechanics Module, see *Bracket — Frequency-Response Analysis*, Application Library path **Structural_Mechanics_Module/Tutorials/bracket_frequency**.

Frequency-Stationary

The **Frequency-Stationary** ( ) study and study step are used to compute the temperature field, at thermal equilibrium, and the electromagnetic field distribution for models created with the following physics interface and module combinations:

- Induction Heating interface, which requires the AC/DC Module,
- Microwave Heating interface, which requires the RF Module, or
- Laser Heating interface, which requires the Wave Optics Module.

It is a special case of a Stationary study in which the stationary heat transfer equation is solved together with a frequency-domain equation for electromagnetics.

	With the RF Module, see *RF Heating*, Application Library path **RF_Module/Microwave_Heating/rf_heating**.

Frequency-Transient

The **Frequency-Transient** ( ) study and study step are used to compute temperature changes over time together with the electromagnetic field distribution in the frequency domain.

The study is available with the following physics interface and module combinations:

- Induction Heating interface, which requires the AC/DC Module,
- Microwave Heating interface, which requires the RF Module,
- Laser Heating interface, which requires the Wave Optics Module.
- Inductively Coupled Plasma interface, which requires the AC/DC Module and the Plasma Module. For this physics interface, the temperature represents the electron temperature.
- Microwave Plasma interface, which requires the RF Module and the Plasma Module. For this physics interface, the temperature represents the electron temperature.

Physics interfaces that support the Frequency-Transient study and study step compute electromagnetic fields in the frequency domain and temperature (electron temperature for Inductively Coupled Plasma and Microwave Plasma) in the time domain. See Time Dependent for all settings.

Only use this study when the power transfer from the fields to any susceptible variables occurs at twice the angular frequency set by the study. In a large number of cases, the thermal time constant of an object of interest is

substantially greater than the angular frequency of the electromagnetic radiation. In order to solve the problem in the time domain, tens or hundreds of thousands of RF cycles need to be computed by the solver before the problem evolves to the periodic steady-state solution. By solving for the fields in the frequency domain, the change in the fields over a single RF cycle does not need to be resolved and thus the periodic steady state solution is reached much more rapidly. This means that the transient, thermal response of an object is computed by this study, but any (small) fluctuations in temperature over any given RF cycle are not.

	• With the AC/DC Module, see *Inductive Heating of a Copper Cylinder*, Application Library path **ACDC_Module/Electromagnetic_Heating/inductive_heating**. • With the Plasma Module (plus AC/DC Module), see *3D ICP Reactor, Argon Chemistry*, Application Library path **Plasma_Module/Inductively_Coupled_Plasmas/argon_3d_icp**. • With the RF Module, see *RF Heating*, Application Library path **RF_Module/Microwave_Heating/rf_heating**.

Frozen Rotor

The **Frozen Rotor** ( ) study is used to compute the velocity, pressure, turbulence, concentration, temperature, and other fields for flow in rotating machinery and is a special case of a Stationary study. The rotating parts are kept frozen in position, and the rotation is accounted for by the inclusion of centrifugal and Coriolis forces. The study is especially suited for flow in rotating machinery where the topology of the geometry does not change with rotation. It is also used to compute the initial conditions for time-dependent simulations of flow in rotating machinery.

Use the **Frozen Rotor** study with the Rotating Machinery, Laminar Flow and Rotating Machinery, Turbulent Flow interfaces, which require the CFD Module, or the Mixer Module plus the CFD Module. The frozen rotor approach assumes that the flow in the rotating domain, expressed in the rotating coordinate system, is fully developed. See Stationary for all settings. For information about the use of this study and its functionality, see the *CFD Module User's Guide*.

	With the CFD Module: *Turbulent Mixing of a Trace Species*, Application Library path **CFD_Module/Single-Phase_Flow/turbulent_mixing**.

Frozen Rotor with Initialization

The **Frozen Rotor with Initialization** study is used for simulations of turbulent fluid flow in rotating machinery. It consists of two study steps: a Wall Distance Initialization study step, solving for the distance function to the closest wall, followed by a Frozen Rotor study step solving for velocity, pressure, turbulence, and other fields. In the Frozen Rotor study step, the rotating parts are kept frozen in position, and the rotation is accounted for by the inclusion of centrifugal and Coriolis forces.

The study is especially suited for flow in rotating machinery where the topology of the geometry does not change with rotation. It is also used to compute the initial conditions for time-dependent simulations of flow in rotating machinery.

Use the **Frozen Rotor with Initialization** study with the Rotating Machinery, Laminar Flow and Rotating Machinery, Turbulent Flow interfaces, which require the CFD Module, or the Mixer Module plus the CFD Module.

Stationary Free Surface

The **Stationary Free Surface** ( ) study step is added to the **Frozen Rotor** or **Frozen Rotor with Initialization** study when a Stationary Free Surface postprocessing feature is applied (available with the CFD Module). The **Stationary Free Surface** study step uses the pressure from the **Frozen Rotor** study step to evaluate the surface deformation from a linearized free surface condition including the surface tension force. The settings are the same as for a Stationary study step.

Frozen Rotor with Stationary Free Surface

The **Frozen Rotor with Stationary Free Surface** ( ) study is used for simulations of flow in rotating machinery when a Stationary Free Surface postprocessing feature is applied (available with the CFD Module). It consists of two study steps: a Frozen Rotor study step solving for the velocity, pressure, turbulence, and other fields, followed by a Stationary Free Surface study step solving for the free surface deformation. In the Frozen Rotor study step, the rotating parts are kept frozen in position, and the rotation is accounted for by the inclusion of centrifugal and Coriolis forces. In the Stationary Free Surface study step, the surface deformation is evaluated from a linearized free surface condition using the pressure from the Frozen Rotor study step.

The study is especially suited for flow in rotating machinery where the topology of the geometry does not change with rotation. It is also used to compute the initial conditions for time-dependent simulations of flow in rotating machinery.

Use the **Frozen Rotor with Stationary Free Surface** study with the Rotating Machinery, Laminar Flow, and Rotating Machinery, Turbulent Flow interfaces, which require the CFD Module, or the Mixer Module plus the CFD Module.

	With the CFD Module and Mixer Module: *Free Surface Mixer*, Application Library path **Mixer_Module/Tutorials/free_surface_mixer**.

Frozen Rotor with Initialization and Stationary Free Surface

The **Frozen Rotor with Initialization and Stationary Free Surface** study is used for simulations of turbulent fluid flow in rotating machinery when a Stationary Free Surface postprocessing feature is applied (available with the CFD Module). It consists of three study steps: a Wall Distance Initialization study step, solving for the distance function to the closest wall, followed by a Frozen Rotor study step solving for velocity, pressure, turbulence, and other fields, and a Stationary Free Surface study step solving for the free surface deformation. In the Frozen Rotor study step, the rotating parts are kept frozen in position, and the rotation is accounted for by the inclusion of centrifugal and Coriolis forces. In the Stationary Free Surface study step, the surface deformation is evaluated from a linearized free surface condition using the pressure from the Frozen Rotor study step.

The study is especially suited for flow in rotating machinery where the topology of the geometry does not change with rotation. It is also used to compute the initial conditions for time-dependent simulations of flow in rotating machinery.

Use the **Frozen Rotor with Initialization and Stationary Free Surface** study with the Rotating Machinery, Laminar Flow, and Rotating Machinery, Turbulent Flow interfaces, which require the CFD Module, or the Mixer Module plus the CFD Module.

Linear Buckling

The **Linear Buckling** ( ) study and study step are used for estimating the critical load at which a structure becomes unstable.

The Linear Buckling study consists of two study steps: a Stationary study step for applying an external load followed by a **Linear Buckling** study step. In the second study step, an eigenvalue solver is used to compute the buckling modes and the associated critical load factors.

A **Linear Buckling** analysis includes the stiffening effects from stresses coming from nonlinear strain terms. The stiffness coming from stresses and material defines an eigenvalue problem in which the eigenvalue is a load factor that, when multiplied with the actual load, gives the critical load in a linear context.

Another way to calculate the critical load is to include large deformation effects and increase the load until the solver fails because the load has reached its critical value.

The Linear Buckling study is available for the Solid Mechanics interfaces using the Structural Mechanics Module or the MEMS Module. It is also available with Shell, Plate, and Truss interfaces when using the Structural Mechanics Module.

STUDY SETTINGS

Use the **Desired number of buckling modes** field to specify the number of buckling modes you want the eigenvalue solver to return.

STUDY EXTENSIONS

This section contains some optional extensions of the study, such as auxiliary sweeps (see Common Study Step Settings). Adding an auxiliary parametric sweep adds an Eigenvalue Parametric attribute node to the Eigenvalue Solver.

Distribute Parametric Solver

If you are running an auxiliary sweep and want to distribute it by sending one parameter value to each compute node, select the **Distribute parametric solver** check box. To enable this option, click the **Show More Options** button ( ) and select **Batch and Cluster** in the **Show More Options** dialog box.

	For more information about performing a linear buckling analysis, see Linearized Buckling Analysis in the *Structural Mechanics User's Guide*.

	The **Include geometric nonlinearity** check box should have the same selection in booth study steps in a Linear Buckling Study. The default to use a geometrically linear analysis. There are some cases when the preload step requires a geometrically nonlinear analysis, and in that case you must use it also in the Linear Buckling study step.

	The **Physics and Variables Selection**, **Values of Dependent Variables**, **Mesh Selection**, **Adaptation and Error Estimates**, and **Geometric Entity Selection for Adaptation** sections and the **Include geometric nonlinearity** check box are described in Common Study Step Settings. There is also detailed information in the Physics and Variables Selection and Values of Dependent Variables sections.

	With the Structural Mechanics Module: *Bracket — Linear Buckling Analysis*, Application Library path **Structural_Mechanics_Module/Tutorials/bracket_linear_buckling**.

Mapping

The **Mapping** ( ) study is a dedicated study for the Background Fluid Flow Coupling multiphysics feature. The study should only solve for the coupling feature on its own.

For more information see the *Acoustics Module User's Guide*.

Mean Energies

The **Mean Energies** ( ) study and study step are used for entering an array of values for the mean electron energy.

COMSOL Multiphysics computes the electron energy distribution function (EEDF) so that the mean electron energy is equal to the mean energy requested. This study conveniently allows data such as rate coefficients, Townsend coefficients, and electron transport properties to be computed as a function of the mean electron energy.

This study is available with the Boltzmann Equation, Two-Term Approximation interface, which requires the Plasma Module. Except for the section below, see Frequency Domain for all settings information. Also see the *Plasma Module User's Guide*.

STUDY SETTINGS

Specify the **Mean energies** to use for the frequency sweep. Select the unit to use from the **Frequency unit** list (default: Hz). Enter the mean energies in the field using space-separated numbers or the `range` function.

Use the **Load parameter values** field to select a file with parameter values. You can browse your file system for files by clicking **Browse**. After selecting a file, click the **Read File** button to load the parameter values into the **Mean energies** field.

For information about the **Reuse solution from previous step** list, see Reuse Solution from Previous Step List.

	With the Plasma Module: *Argon Boltzmann Analysis*, Application Library path **Plasma_Module/Two-term_Boltzmann_Equation/boltzmann_argon**.

Mode Analysis

The **Mode Analysis** ( ) study and study step are used to compute the propagation constants or wave numbers as well as propagating mode shapes for a given frequency.

For example, in electromagnetics, it is used to compute the propagation constants and mode shapes at ports and waveguide cross sections. In acoustics, it is used to compute the propagation constants and mode shapes at inlets, outlets, and cross sections of guiding structures such as ducts.

When you add a Mode Analysis study, it adds a **Mode Analysis** study step under the **Study** node. The Mode Analysis study is available with the Acoustics Module, RF Module, or Wave Optics Module.

STUDY SETTINGS

Select a method to **Transform**: **Effective mode index** or **Phase velocity**, **Out-of-plane wave number**, or **None**. The available transforms and the default transform depend on the physics interfaces in the study.

Enter a value or expression for the **Mode analysis frequency**. The default frequency depends on the physics interfaces in the study.

From the **Mode search method** list, select a search method:

- **Manual** (the default), to specify some search criteria manually. See Manual Mode Search Settings below.
- **Region**, to define a mode search region in a complex plane. See Mode Search Region Settings below.

Manual Mode Search Settings

Use the **Desired number of modes** field to specify the number of modes you want the solver to return (default: 6).

In the **Search for modes around** field, you can specify a value or expression around which the eigenvalue solver should look for solutions to the eigenvalue equation (default: 1).

Use the **Mode search method around shift** list to control how the eigenvalue solver searches for modes around the specified shift value:

- Select **Closest in absolute value** (the default value) to search for modes that are closest to the shift value when measuring the distance as an absolute value.
- Select **Larger real part** to search for modes with a larger real part than the shift value.
- Select **Smaller real part** to search for modes with a smaller real part than the shift value.
- Select **Larger imaginary part** to search for modes with a larger imaginary part than the shift value.
- Select **Smaller imaginary part** to search for modes with a smaller imaginary part than the shift value.

Mode Search Region Settings

Use the **Approximate number of modes** field to specify the approximate number of modes you want the solver to return (default: 20).

In the **Maximum number of modes** field, you can specify a maximum number of modes to limit the eigenvalue solver's search for additional modes (default: 200).

The **Perform consistency check** check box is selected by default to increase confidence that the solver finds all modes in the search region.

Under **Search region**, you define the size of the search region for modes as a rectangle in the complex plane by specifying the **Smallest real part**, **Largest real part**, **Smallest imaginary part**, and **Largest imaginary part** in the respective text fields. The search region also works as an interval method if the **Smallest imaginary part** and **Largest imaginary part** are equal; the eigenvalue solver then only considers the real axis and vice versa.

STUDY EXTENSIONS

This section contains some optional extensions of the study, such as auxiliary sweeps (see Common Study Step Settings). Adding an auxiliary parametric sweep adds an Eigenvalue Parametric attribute node to the Eigenvalue Solver.

Distribute Parametric Solver

If you are running an auxiliary sweep and want to distribute it by sending one parameter value to each compute node, select the **Distribute parametric solver** check box. To enable this option, click the **Show More Options** button ( ) and select **Batch and Cluster** in the **Show More Options** dialog box.

	The **Physics and Variables Selection**, **Values of Dependent Variables**, **Mesh Selection**, **Adaptation and Error Estimates**, and **Geometric Entity Selection for Adaptation** sections and the **Include geometric nonlinearity** check box are described in Common Study Step Settings. There is also detailed information in the Physics and Variables Selection and Values of Dependent Variables sections.

	• With the Acoustics Module: *Eigenmodes in a Muffler*, Application Library path **Acoustics_Module/Automotive/eigenmodes_in_muffler**. • With the Wave Optics Module: *Stress-Optical Effects in a Photonic Waveguide*, Application Library path **Wave_Optics_Module/Waveguides_and_Couplers/stress_optical**.

Optimization

The **Optimization** ( ) study step specifies an optimization problem and controls the optimization solvers provided by the Optimization Module. For information about the use of this study and its functionality, see the *Optimization Module User's Guide*.

Parameter Estimation

The **Parameter Estimation** ( ) study step provides the possibility to perform parameter estimation based on model data and some reference data using various parameter estimation methods. For information about the use of this study and its functionality, see the *Optimization Module User's Guide*.

Prestressed Analyses Studies

The Eigenfrequency, Prestressed ( ) and Frequency Domain, Prestressed ( ) study types (available under **Preset Studies**) perform a stationary analysis of the problem to compute the prestressed state and then perform the appropriate prestressed analysis. In both cases, the prestressed state can be computed using any stationary problem. You can use the Frequency Domain, Prestressed, Modal and Time Dependent, Prestressed, Modal study types (available under **Advanced Studies**) to compute the response to harmonic or time-dependent loads fluctuating around a prior static load. The solution is performed using mode superposition.

For exclusive boundary conditions (that is to say, loads which overwrite previously added loads of the same type, such as the potential load in electrostatics) in the frequency-domain studies., you can add **Harmonic Perturbation** as a subnode to the boundary condition node. Its magnitude is added in the subnode itself.

The studies are available for:

- Solid Mechanics ,using the Structural Mechanics Module, Geomechanics Module, MEMS Module, or Acoustics Module.
- Electromechanics, using the MEMS Module.
- The **Eigenfrequency, Prestressed**; **Frequency Domain, Prestressed, Modal**; and **Time Dependent, Prestressed, Modal** studies are also available for the Shell, Plate, Membrane, and Truss interfaces using the Structural Mechanics Module.

EIGENFREQUENCY, PRESTRESSED

The **Eigenfrequency Prestressed** ( ) study is used to compute eigenfrequencies and eigenmodes that are influenced by a prior static load.

The study consists of two study steps: a Stationary study step followed by an Eigenfrequency study step. The study computes the eigenfrequencies and the shapes of the eigenmodes when influenced by a prior static load on the structure.

The effects of the preload can be computed with or without taking geometric nonlinearity into account. To perform this study, no additional forces need to be added to the physics interface settings as only the modes and mode frequencies are returned.

	• With the MEMS Module: *Normal Modes of a Biased Resonator — 3D*, Application Library path **MEMS_Module/Actuators/biased_resonator_3d_modes**. • With the Nonlinear Structural Materials Module: *Elasto-Acoustic Effect in Rail Steel*, Application Library path **Nonlinear_Structural_Materials_Module/Hyperelasticity/rail_steel**. • With the Structural Mechanics Module: *Bracket — Eigenfrequency Analysis*, Application Library path **Structural_Mechanics_Module/Tutorials/bracket_eigenfrequency**.

FREQUENCY DOMAIN, PRESTRESSED

The **Frequency Domain, Prestressed** ( ) study is used to compute the response to harmonic loads fluctuating around a prior static load.

The study consists of two study steps: a Stationary study step followed by a Frequency Domain Perturbation study step.

The effects of the preload can be computed with or without taking geometric nonlinearity into account. For this study type it is necessary to specify the magnitude of the harmonic load, as this determines the magnitude of the system response. In order to do this, a **Harmonic Perturbation** force must be added to the model. For contributing loads (that is, loads that can be added without overwriting the same type of node, such as a boundary load in solid mechanics), right-click the node and select **Harmonic Perturbation**. In this case, a load to generate the prestress must be added separately to the model.

FREQUENCY DOMAIN, PRESTRESSED, MODAL

The **Frequency Domain, Prestressed, Modal** ( ) study is used to compute the response to harmonic loads fluctuating around a prior static load. The solution is performed using mode superposition.

The study consists of three study steps: a Stationary study step followed by an Eigenfrequency study step and a Frequency Domain, Modal study step.

The effects of the preload can be computed with or without taking geometric nonlinearity into account. For this study type it is necessary to specify the magnitude of the harmonic load, as this determines the magnitude of the system response. In order to do this, a **Harmonic Perturbation** force must be added to the model. For contributing loads (that is, loads that can be added without overwriting the same type of node, such as a boundary load in solid mechanics), right-click the node and select **Harmonic Perturbation**. In this case, a load to generate the prestress must be added separately to the model.

TIME DEPENDENT, PRESTRESSED, MODAL

The **Time Dependent, Prestressed, Modal** ( ) study is used to compute the response to time-dependent loads fluctuating around a prior static load. The solution is performed using mode superposition.

The study consists of three study steps: a Stationary study step followed by an Eigenfrequency study step and a Time Dependent, Modal study step.

	For different plot settings made available, see Harmonic Perturbation, Prestressed Analysis, and Small-Signal Analysis.

	• With the MEMS Module: *Frequency Response of a Biased Resonator — 2D*, Application Library path **MEMS_Module/Actuators/biased_resonator_2d_freq**. • With the Structural Mechanics Module: *Bracket — Frequency-Response Analysis*, Application Library path **Structural_Mechanics_Module/Tutorials/bracket_frequency**.

Ray Tracing

The **Ray Tracing** ( ) study and study step are used to compute the trajectories of rays. The Ray Tracing study step is a special case of the Time Dependent study step. The time steps taken by the solver can either be specified directly or by specifying a set of path lengths and a characteristic group velocity. Built-in stop conditions can be used to stop the solver when no active rays remain, or when the intensity of active rays is negligibly small. Except for the section below, see Time Dependent for all settings. This study requires the Ray Optics Module or the Acoustics Module.

For example, this study is used with the Geometrical Optics or Ray Acoustics interfaces to compute ray trajectories. By specifying the range of time steps in terms of the maximum path length, it is possible to deduce the optimal study settings from the geometry size and ray properties.

STUDY SETTINGS

Select a **Time step specification**: **Specify time steps** (the default) or **Specify maximum path length**.

- If **Specify time steps** is selected, select a **Time unit** from the list to use a convenient time unit for the time span of the simulation. The default is ms (milliseconds) for models that use the Ray Acoustics interface and ns (nanoseconds) for models that use the Geometrical Optics interface. Then, in the **Times** field, specify the time interval for the output from the simulation using the selected time unit.
- If **Specify maximum path length** is selected, select a **Length unit** from the list (the default is m). Then specify a list of **Lengths** using the selected unit. Enter a **Characteristic group velocity** (SI unit: m/s). For Ray Acoustics simulations the default is `343 m/s`, the approximate speed of sound in air at standard temperature and pressure. For Geometrical Optics simulations the default is `c_const`, the speed of light in a vacuum. The time steps taken by the solver are computed by dividing the list of lengths in the **Lengths** field by the characteristic group velocity.

From the **Tolerance** list, choose **Physics controlled** (the default) to use the tolerance suggested by the physics. Choose **User controlled** to override the suggested relative tolerance with a value that you enter in the **Relative tolerance** check field. The tolerance settings control the internal time steps taken by the solver, so selecting large time steps for the output times does not affect the accuracy in the time stepping.

Select a **Stop condition**: **None** (the default), **No active rays remaining**, **Active rays have intensity below threshold**, or **Active rays exceed maximum number of reflections**. If **No active rays remaining** is selected, the solver terminates immediately when all rays are stuck, frozen, or have disappeared.

If **Active rays have intensity below threshold** is selected, enter a **Threshold ray intensity** (the default is `1[W/m^2]`). The solver terminates immediately when all rays are either stuck, frozen, have disappeared, or have intensity less than the threshold. This setting can only be used if the ray intensity is computed for the Geometrical Optics or Ray Acoustics physics interface (select any option other than **None** from the **Intensity Computation** list in the physics interface **Intensity Computation** section.

If **Active rays exceed maximum number of reflections** is selected, enter a **Number of reflections** (the default is `5`). The solver terminates immediately when all rays are either stuck, frozen, have disappeared, or have been reflected or refracted at least the specified number of times. This setting can only be used if the **Count reflections** check box has been selected in the **Additional Variables** section for the Geometrical Optics or Ray Acoustics interface.

Reduced Electric Fields

Use the **Reduced Electric Fields** ( ) study and study step to sweep through a range of reduced electric fields and to compute electron transport properties and electron impact rate coefficients for a given reduced electric field. Specifying a range of values for the reduced electric field allows for these properties to be tabulated. This tabulated data can then potentially be used in a space-dependent plasma simulation. The reduced electric field is defined as the electric field divided by the background gas number density.

This study step is available with the Boltzmann Equation, Two-Term Approximation interface, which requires the Plasma Module. Except for the section below, see Frequency Domain for all settings. Also see the *Plasma Module User's Guide*.

STUDY SETTINGS

Specify the **Reduced electric fields** to use for the frequency sweep. Specify the frequencies to use for the frequency sweep. Select the unit to use from the **Frequency unit** list (default: Hz). Enter the reduced electric fields in the field using space-separated numbers or the `range` function.

Use the **Load parameter values** field to select a file with parameter values. You can browse your file system for files by clicking **Browse**. After selecting a file, click the **Read File** button to load the parameter values into the **Reduced electric fields** field.

For information about the **Reuse solution from previous step** list, see Reuse Solution from Previous Step List.

	With the Plasma Module: *Argon Boltzmann Analysis*, Application Library path **Plasma_Module/Two-term_Boltzmann_Equation/boltzmann_argon**.

Schrödinger-Poisson

Use the **Schrödinger-Poisson** ( ) study and study step to automatically generate the iterations in the solver sequence for the self-consistent solution of the fully coupled Schrödinger-Poisson equation. Also see the *Semiconductor Module User's Guide* for the Schrödinger-Poisson Equation multiphysics interface.

To take advantage of the default settings detailed below, use the **Model Wizard** or the **Add Study** button in the ribbon or toolbar of the COMSOL Desktop. A study step added by right-clicking a Study node does not include any default settings suggested by the physics.

STUDY SETTINGS

The default option for the **Eigenfrequency (Eigenvalue) search method** drop-down menu is **Manual**, because for a completely new problem, it is often necessary to use this option to find the range of the eigenenergies and a rough estimate of the number of eigenstates. Make sure that the **Unit** menu is left as blank (default).

Once the range and number are found, switch to the **Region** search option with appropriate settings for the range and number of eigenvalues, in order to ensure that all significant eigenstates are found by the solver.

Search region (Region search option)

Make sure the **Unit** list is left as blank (default).

The real and imaginary parts of the input fields refer to the real and imaginary parts of the eigenvalue, respectively (not the real and imaginary part of the eigenfrequency). So, to look for the eigenenergies of bound states, set the input fields for the real parts to the expected energy ranges, and set the input fields for the imaginary parts to a small range around zero to capture numerical noise or slightly leaky quasi-bound states.

PHYSICS AND VARIABLES SELECTION

If there are extra domain or boundary conditions used to obtain the initial value for the fully coupled problem, remember to disable them here. For example, see the Self-Consistent Schrödinger-Poisson Results for a GaAs Nanowire tutorial model (`schrodinger_poisson_nanowire`), where the Thomas-Fermi solution is used as the initial condition, and the space charge density contribution from the Thomas-Fermi approximation is disabled here.

ITERATIONS

The default option for the **Termination method** drop-down menu is **Minimization of global variable**, which updates a table displaying the history of a global error variable after each iteration during the solution process. This provides a good indication of the solution process to monitor whether the iteration is converging.

The default expression for the **Global variable** input field uses the built-in global error variable `schrp1.global_err`, which computes the max difference between the electric potential fields from the two most recent iterations, in the unit of V, as discussed in the section Charge Density Computation for the Schrödinger-Poisson Coupling multiphysics node in the *Semiconductor Module User's Guide*. Note that the prefix for the variable, in this case `schrp1`, should match the **Name** input field of the Schrödinger-Poisson Coupling multiphysics node. Setting the **Absolute tolerance** to `1e-6` thus means the iteration ends after the max difference is less than `1` uV.

VALUES OF DEPENDENT VARIABLES

Use this section to configure the initial conditions for the study step. See section Values of Dependent Variables for details.

STUDY EXTENSIONS

Use the **Auxiliary sweep** option to solve for a set of parameters. For example, in the Self-Consistent Schrödinger-Poisson Results for a GaAs Nanowire tutorial model (`schrodinger_poisson_nanowire`), it is used to solve for a set of azimuthal quantum numbers. See Auxiliary Sweep for details.

Semiconductor Equilibrium

Use the **Semiconductor Equilibrium** ( ) study and study step to compute the semiconductor solution assuming the system is under thermal equilibrium. The study consists of a single Semiconductor Equilibrium step. The Semiconductor Equilibrium study step assumes that the charge carriers are in thermal equilibrium, so it only solves Poisson's equation (while still taking into account the space charge density from the charge carriers and the ionized dopants). This provides the most efficient solution for systems known to be in equilibrium, as well as an option to generate the initial condition for solving nonequilibrium models. The settings are similar to those for a Stationary study step. Note that all metal contacts attached to the same **Semiconductor Material Model** feature are biased at a common voltage, as dictated by the equilibrium condition. See Semiconductor Equilibrium Study Settings on how to set the common bias voltage. This study is available with the Semiconductor interface in the Semiconductor Module.

Semiconductor Initialization

Use the **Semiconductor Initialization** ( ) study and study step to adaptively refine the mesh based upon the gradient of the impurity doping concentration. The study consists of a single Semiconductor Initialization step. The Semiconductor Initialization study step has adaptive mesh refinement turned on by default and solves a nonphysical equation that causes the mesh to be refined in regions where the gradient of the doping is large. The settings are similar to those for a Stationary study step. This study is available with the Semiconductor Module.

Frequency-Stationary, One-Way Coupled, Electromagnetic Heating

The **Frequency-Stationary, One-Way Coupled, Electromagnetic Heating** ( ) study is used to sequentially compute the electromagnetic field distribution and then the temperature field at thermal equilibrium for models created with the following physics interface and module combinations:

- Induction Heating interface, which requires the AC/DC Module
- Microwave Heating interface, which requires the RF Module
- Laser Heating interface, which requires the Wave Optics Module

This study first solves a frequency-domain equation for electromagnetics and then use the electromagnetic heat source as a source term when solving a subsequent stationary heat transfer equation. See the documentation in the AC/DC Module, RF Module, or Wave Optics Module for more information.

Frequency-Transient, One-Way Coupled, Electromagnetic Heating

The **Frequency-Transient, One-Way Coupled, Electromagnetic Heating** ( ) study is used to sequentially compute the electromagnetic field distribution in the frequency domain and then the temperature changes over time.

The study is available with the following physics interface and module combinations:

- Induction Heating interface, which requires the AC/DC Module
- Microwave Heating interface, which requires the RF Module
- Laser Heating interface, which requires the Wave Optics Module

Use the Frequency-Transient, One-Way Coupled, Electromagnetic Heating study to compute temperature changes over time together driven by an electromagnetic heat source. It first solves a frequency-domain equation for electromagnetics and then use the electromagnetic heat source as a source term when solving a subsequent time dependent heat transfer equation. See the documentation in the AC/DC Module, RF Module, or Wave Optics Module for more information.

Small-Signal Analysis, Frequency Domain

The **Small-Signal Analysis, Frequency Domain** ( ) study is used for studying small oscillations about a biased solution in electromagnetics.

The study consists of two study steps: a Stationary study step, for computing the biased solution, followed by a Frequency Domain Perturbation study step, for computing the frequency response about the biased solution. For the second study step, the computation is for a linear perturbation about the biased solution.

This study is available with the AC/DC Module, MEMS Module, and Semiconductor Module.

	With the AC/DC Module: *Small-Signal Analysis of an Inductor*, Application Library path **ACDC_Module/Inductive_Devices_and_Coils/small_signal_analysis_of_inductor**.

Stationary and Time Dependent One-Way Coupled Studies for Fluid-Structure Interaction

The Stationary, One-Way Coupled; Time Dependent, One-Way Coupled; Stationary, One-Way Coupled with Initialization; and Time Dependent, One-Way Coupled with Initialization studies are available with the Fluid-Structure Interaction interface, which requires the MEMS Module or the Structural Mechanics Module.

The initialization study types are also available if you have a Structural Mechanics Module *plus* the CFD Module.

STATIONARY, ONE-WAY COUPLED

The **Stationary, One-Way Coupled** ( ) study is used for stationary fluid-structure interaction computations where the model is one-way coupled in the sense that the structural deformations are so small that they do not affect the flow.

The study consists of two study steps: a Stationary, Fluid study step, solving for the fluid velocity and pressure fields, followed by a Stationary, Solid study step, solving for the solid deformation field. The settings available for the two study steps are the same as for a Stationary study step. If an additional physics interface is added, then it is automatically added to both study steps.

TIME DEPENDENT, ONE-WAY COUPLED

The **Time Dependent, One-Way Coupled** ( ) study is used for time-dependent fluid-structure interaction computations where the model is one-way coupled in the sense that the structural deformations are so small that they do not affect the flow.

The study consists of two study steps: a Time Dependent, Fluid study step, solving for the fluid velocity and pressure fields, followed by a Time Dependent, Solid study step, solving for the solid deformation field. The settings available for the two study steps are the same as for a Time Dependent study step. If an additional physics interface is added, then it is automatically added to both study steps.

STATIONARY, ONE-WAY COUPLED WITH INITIALIZATION

The **Stationary, One-Way Coupled with Initialization** ( ) study is used for stationary turbulent fluid-structure interaction computations where the model is one-way coupled in the sense that the structural deformations are so small that they do not affect the flow.

The study consists of three study steps: a Wall Distance Initialization study step, solving for the distance function to the closest wall, followed by a Stationary, Fluid study step, solving for the fluid field, and finally a Stationary, Solid study step, solving for the solid deformation field. The settings available for the study steps are the same as for a Stationary study step. If an additional physics interface is added, then it is automatically added to the last two study steps.

How to Add this Study

1. Add a **Fluid-Structure Interaction** interface to the model.
2. On the **Fluid-Structure Interaction** node's **Settings** window under **Physical Model**, select **RANS** as the **Turbulence model type**.
3. Select **Low Reynolds number k-ε** or **Spalart-Allmaras** as the **Turbulence model**.
4. In the **Model Builder**, right-click the root node and select **Add Study**.
5. In the **Model Wizard** or **Add Study** window under **Preset Studies**, select the **Stationary, One-Way Coupled with Initialization** study.

TIME DEPENDENT, ONE-WAY COUPLED WITH INITIALIZATION

The **Time Dependent, One-Way Coupled with Initialization** ( ) study is for time-dependent, one-way coupled Fluid-Structure Interaction models using a turbulence model that requires the distance to the closest wall. The study node creates three study steps:

- The first, Wall Distance Initialization, solves for the distance to the closest wall.
- The second, Time Dependent, Fluid, solves for the fluid-flow variables.
- The third, Time Dependent, Solid, solves for the solid deformation.

The settings available for the study steps are the same as for the Time Dependent node. When additional physics interfaces are included, it is by default added to the last two study steps.

How to Add this Study

1 Add a **Fluid-Structure Interaction** interface to the model.

2 On the **Fluid-Structure Interaction** node's **Settings** window under **Physical Model**, select **RANS** as the **Turbulence model type**.

3 Select **Low Reynolds number k-ε** or **Spalart-Allmaras** as the **Turbulence model**.

4 In the **Model Builder**, right-click the root node and select **Add Study**.

5 In the **Model Wizard** or **Add Study** window under **Preset Studies**, select the **Time Dependent, One-Way Coupled with Initialization** study.

STATIONARY, FLUID

The **Stationary, Fluid** ( ) study step is added to the Stationary, One-Way Coupled or Stationary, One-Way Coupled with Initialization study, which are available for the Fluid-Structure Interaction interface. The settings available for this node are the same as for the Stationary node.

TIME DEPENDENT, FLUID

The **Time Dependent, Fluid** ( ) study step is added to the Time Dependent, One-Way Coupled or Time Dependent, One-Way Coupled with Initialization study, which are available for the Fluid-Structure Interaction interface. The settings available for this node are the same as for the Time Dependent node.

STATIONARY, SOLID

The **Stationary, Solid** ( ) study step is added to the Stationary, One-Way Coupled or Stationary, One-Way Coupled with Initialization study, which are available for the Fluid-Structure Interaction interface. The settings available for this node are the same as for the Stationary node.

TIME DEPENDENT, SOLID

The **Time Dependent, Solid** ( ) study step is added to the Time Dependent, One-Way Coupled or Time Dependent, One-Way Coupled with Initialization study, which is available for the Fluid-Structure Interaction interface. The settings available for this node are the same as for the Time Dependent node.

Stationary, Time Dependent, and Frozen Rotor One-Way Coupled Studies for Nonisothermal Flow

The Stationary, One-Way Coupled, NITF and Time Dependent, One-Way Coupled, NITF studies are available with the Nonisothermal Flow interfaces and the Conjugate Heat Transfer interfaces, which require the CFD Module or the Heat Transfer Module. The Frozen Rotor, One-Way Coupled, NITF study is available with the Rotating Machinery, Nonisothermal Flow interfaces, which require the Mixer Module plus the CFD Module.

STATIONARY, ONE-WAY COUPLED, NITF

The **Stationary, One-Way Coupled, NITF**( ) study is used for stationary nonisothermal flow computations where the model is one-way coupled in the sense that the temperature variations are so small that they do not affect the flow.

The study consists of two Stationary study steps, the first solving for the fluid velocity and pressure fields, and the second solving for the temperature field. If an additional physics interface is added, then it is automatically added to both study steps.

TIME DEPENDENT, ONE-WAY COUPLED, NITF

The **Time Dependent, One-Way Coupled, NITF**( ) study is used for time-dependent nonisothermal flow computations where the model is one-way coupled in the sense that the temperature variations are so small that they do not affect the flow.

The study consists of two Time Dependent study steps, the first solving for the fluid velocity and pressure fields, and the second solving for the temperature field. If an additional physics interface is added, then it is automatically added to both study steps.

FROZEN ROTOR, ONE-WAY COUPLED, NITF

The **Frozen Rotor, One-Way Coupled, NITF**( ) study is used for frozen rotor nonisothermal flow computations where the model is one-way coupled in the sense that the temperature variations are so small that they do not affect the flow.

The study consists of two Frozen Rotor study steps, the first solving for the fluid velocity and pressure fields, and the second solving for the temperature field. If an additional physics interface is added, then it is automatically added to both study steps.

Stationary and Time Dependent One-Way Coupled Studies for Moisture Flow

The Stationary, One-Way Coupled, MF and Time Dependent, One-Way Coupled, MF studies are available with the Moisture Flow interface, which requires the Heat Transfer Module.

STATIONARY, ONE-WAY COUPLED, MF

The **Stationary, One-Way Coupled, MF**( ) study is used for stationary moisture flow computations where the model is one-way coupled in the sense that the moisture variations are so small that they do not affect the flow.

The study consists of two Stationary study steps, the first solving for the fluid velocity and pressure fields, and the second solving for the relative humidity field. If an additional physics interface is added, then it is automatically added to both study steps.

TIME DEPENDENT, ONE-WAY COUPLED, MF

The **Time Dependent, One-Way Coupled, MF**( ) study is used for time-dependent moisture flow computations where the model is one-way coupled in the sense that the moisture variations are so small that they do not affect the flow.

The study consists of two Time Dependent study steps, the first solving for the fluid velocity and pressure fields, and the second solving for the relative humidity field. If an additional physics interface is added, then it is automatically added to both study steps.

Stationary Source Sweep

Use a **Stationary Source Sweep** ( ) study step to solve a stationary study that is sweeping among feedings, extracting lumped matrices (for example, a capacitance matrix in the Electrostatics interface or a resistance matrix in the Electric Currents interface). The settings for this study step are similar to those for the Stationary study step. In addition, the **Settings** window includes the following section.

SOURCE SELECTION

In this section, you can select the **Solve only for specified sources** check box to solve and sweep only over the sources that you add in the **Source names** field.

Stationary Plug Flow

The **Stationary Plug Flow** ( ) study and study step are used for plug flow reactor models created with the Reaction Engineering interface. The reactor equations describe the molar flow rate (SI unit: mol/s) as a function of reactor volume (SI unit: m^3) under stationary conditions. The Plug Flow Solver utilizes the mathematical analogy between

volume and time in the reactor equations. Therefore, the settings for this study step are similar to those in the Time Dependent study step. This study requires the Chemical Reaction Engineering Module.

	With the Chemical Reaction Engineering Module: *Nonisothermal Plug-Flow Reactor*, Application Library path **Chemical_Reaction_Engineering_Module/Tubular_Reactors/nonisothermal_plug_flow**.

Stationary with Initialization and Time Dependent with Initialization

The Stationary with Initialization and Time Dependent with Initialization studies are available with a variety of turbulent flow physics interfaces, which require either the CFD Module or Heat Transfer Module.

STATIONARY WITH INITIALIZATION

The **Stationary with Initialization** ( ) study is used for stationary turbulent flow models that require an initialization. It adds a Wall Distance Initialization study step followed by a Stationary study step to the Study node. The **Wall Distance Initialization** study step is dedicated to solving for the reciprocal wall distance (that is, the reciprocal distance to the closest wall). The second step is an ordinary **Stationary** study step, but it excludes the reciprocal wall distance except when the physics is put on a moving frame, in which case the reciprocal wall distance is solved for in the stationary step as well.

	If you have the CFD Module, see an example using the High Mach Number Flow interface: *Transonic Flow in a Sajben Diffuser*, Application Library path **CFD_Module/High_Mach_Number_Flow/sajben_diffuser**.

TIME DEPENDENT WITH INITIALIZATION

The **Time Dependent with Initialization** ( ) study is used for time-dependent turbulent flow models that require an initialization. It adds a Wall Distance Initialization study step followed by an ordinary Time Dependent study step to the Study node. The **Wall Distance Initialization** study step is dedicated to solving for the reciprocal wall distance, that is, the reciprocal distance to the closest wall.

WALL DISTANCE INITIALIZATION

The **Wall Distance Initialization** ( ) study step is added to the Stationary with Initialization and Time Dependent with Initialization studies when using a turbulent model. This first step is dedicated to solving for the reciprocal wall distance. For turbulence models, the distance determined in the initialization step is the distance to the closest wall. For two-phase flow it is the distance to the phase interface. The settings for this study are the same as for the Stationary and Time Dependent studies.

Stationary, Time Dependent, and Frozen Rotor One-Way Coupled with Initialization Studies for Nonisothermal Flow

The Stationary, One-Way Coupled with Initialization, NITF and Time Dependent, One-Way Coupled with Initialization, NITF studies are available with the Nonisothermal Flow interfaces and the Conjugate Heat Transfer interfaces, which require the CFD Module or the Heat Transfer Module. The Frozen Rotor, One-Way Coupled with Initialization, NITF study is available with the Rotating Machinery, Nonisothermal Flow interfaces, which require the Mixer Module plus the CFD Module.

STATIONARY, ONE-WAY COUPLED WITH INITIALIZATION, NITF

The **Stationary, One-Way Coupled with Initialization, NITF**( ) study is used for stationary nonisothermal flow computations with a turbulent model that requires an initialization. The model is one-way coupled in the sense that the temperature variations are so small that they do not affect the flow.

The study consists of a Wall Distance Initialization followed by two Stationary study steps. The **Wall Distance Initialization** study step is dedicated to solving for the reciprocal wall distance (that is, the reciprocal distance to the closest wall). The first **Stationary** study step solves for the fluid velocity and pressure fields, and the second solves for the temperature field.

TIME DEPENDENT, ONE-WAY COUPLED WITH INITIALIZATION, NITF

The **Time Dependent, One-Way Coupled with Initialization, NITF**( ) study is used for time-dependent nonisothermal flow computations with a turbulent model that requires an initialization. The model is one-way coupled in the sense that the temperature variations are so small that they do not affect the flow.

The study consists of a Wall Distance Initialization followed by two Time Dependent study steps. The **Wall Distance Initialization** study step is dedicated to solving for the reciprocal wall distance (that is, the reciprocal distance to the closest wall). The first **Time Dependent** study step solves for the fluid velocity and pressure fields, and the second solves for the temperature field.

FROZEN ROTOR, ONE-WAY COUPLED WITH INITIALIZATION, NITF

The **Frozen Rotor, One-Way Coupled with Initialization, NITF**( ) study is used for frozen rotor nonisothermal flow computations with a turbulent model that requires an initialization. The model is one-way coupled in the sense that the temperature variations are so small that they do not affect the flow.

The study consists of a Wall Distance Initialization followed by two Frozen Rotor study steps. The **Wall Distance Initialization** study step is dedicated to solving for the reciprocal wall distance (that is, the reciprocal distance to the closest wall). The first **Frozen Rotor** study step solves for the fluid velocity and pressure fields, and the second solves for the temperature field.

Thermal Perturbation, Eigenfrequency

The **Thermal Perturbation, Eigenfrequency** study is available with various heat transfer interfaces and requires the Heat Transfer Module or the MEMS Module. This study computes the oscillations around an equilibrium steady-state temperature field.

The study consists of two study steps: a **Stationary** study step, for computing the steady-state solution, followed by a **Eigenfrequency** study step, for computing the eigenmodes and eigenfrequencies.

Thermal Perturbation, Frequency Domain

The **Thermal Perturbation, Frequency Domain** study is available with various heat transfer interfaces and requires the Heat Transfer Module or the MEMS Module. This study computes eigenmodes and eigenfrequencies of linearized model around an equilibrium steady-state temperature field.

The study consists of two study steps: a **Stationary** study step, for computing the steady-state solution, followed by a **Frequency-Domain, Perturbation** study step, for computing the harmonic oscillations.

Time Dependent with FFT

The **Time Dependent with FFT** study adds two study steps for computing a time-dependent solution using a **Time Dependent** study step and then applying a **Time to Frequency FFT** study step.

This study type is available with the Solid Rotor and Beam Rotor interfaces in the Rotordynamics Module.

Time Dependent with Phase Initialization

The **Time Dependent with Phase Initialization** ( ) study is used for time-dependent two-phase flow models that require an initialization of a level set function or phase field function. It adds a Phase Initialization study step followed by a Time Dependent study step to the Study node. The **Phase Initialization** study step is dedicated to solving for the reciprocal distance to the phase interface.

This study requires the CFD Module or Microfluidics Module.

PHASE INITIALIZATION

The **Phase Initialization** ( ) study step is added to the Time Dependent with Phase Initialization study when using two-phase flow or a moving interface. This first step is dedicated to solving for the reciprocal interface distance. In the case of two-phase flow, the distance determined in the initialization step is the distance to the phase interface. The settings for this study are the same as for the Time Dependent study.

	See an example using the Laminar Two-Phase Flow, Level Set interface: • If you have the CFD Module: *Droplet Breakup in a T-Junction*, Application Library path **CFD_Module/Multiphase_Benchmarks/droplet_breakup**. • If you have the Microfluidics Module: *Droplet Breakup in a T-Junction*, Application Library path **Microfluidics_Module/Multiphysics_Module/Two-Phase_Flow/droplet_breakup**.

Wavelength Domain

The **Wavelength Domain** ( ) study and study step are used to compute the response of a linear or linearized model subjected to electromagnetic harmonic excitation for one or several wavelengths.

For example, in electromagnetic wave propagation, it is used to compute a structure's transmission and reflection versus wavelength. A Wavelength Domain study accounts for the effects of all eigenmodes that are properly resolved by the mesh and how they couple with the applied excitations. The output of a Wavelength Domain study step is typically displayed as a transfer function (for example, magnitude or phase of scattering parameters versus wavelength).

The Wavelength Domain study step also provides a frequency, defined as

$$f = \frac{c_0}{\lambda},$$

where f is the frequency, c_0 is the speed of light in vacuum, and λ is the vacuum wavelength. This frequency can be used as an input parameter to physics interfaces formulated to be run by Frequency Domain studies.

It is also possible to add an auxiliary sweep to this study step, which creates a multiparameter sweep (Parametric solver) over both the wavelength and the given parameters, and optionally with continuation in the wavelength or in one of the given parameters. It corresponds to a stationary parametric solver that is preset to linearize the equations (Stationary Solver with a Parametric attribute).

Alternatively, select the **Use asymptotic waveform evaluation** check box to use an AWE Solver instead of the Parametric solver.

	The **Include geometric nonlinearity** check box and the **Results While Solving**, **Mesh Selection**, **Adaptation and Error Estimates**, **Geometric Entity Selection for Adaptation**, and **Auxiliary Sweep** sections are described in Common Study Step Settings. There is also detailed information in the Physics and Variables Selection and Values of Dependent Variables sections.

This study and study step require the Wave Optics Module.

STUDY SETTINGS

Specify the vacuum wavelengths to use for the wavelength sweep. Select the unit to use from the **Wavelength unit** list (default: µm). Type the vacuum wavelength in the **Wavelengths** field using space-separated numbers or the `range` function.

Use the **Load parameter values** field to select a file with parameter values. You can browse your file system for files by clicking the **Browse** button. After selecting a file, click the **Read File** button to load the parameter values into the **Frequencies** field.

For information about the **Reuse solution from previous step** list, see Reuse Solution from Previous Step List.

STUDY EXTENSIONS

Also see Auxiliary Sweep.

Asymptotic Waveform Evaluation

Select the **Use asymptotic waveform evaluation** check box to enable the *asymptotic waveform evaluation (AWE) solver*. The Frequency Domain study generates a solver configuration that is used to solve a stationary parametric problem or an asymptotic waveform evaluation problem. By selecting this check box, this study step corresponds to an AWE Solver.

Distribute Parametric Solver

If you are running a parametric sweep and want to distribute it by sending one parameter value to each compute node, select the **Distribute parametric solver** check box. This requires that your study includes a parametric sweep. To enable this option, click the **Show More Options** button ( ) and select **Batch and Cluster** in the **Show More Options** dialog box.

	With the Wave Optics Module: *Hexagonal Grating*, Application Library path **Wave_Optics_Module/Gratings_and_Metamaterials/hexagonal_grating**.

Computing a Solution

A solution can be computed in a few ways depending on the sequence implemented for a model.

THE DIFFERENCE BETWEEN COMPUTING A STUDY, SOLVER, OR JOB

There are conceptual differences between computing, or running, a study versus running a solver configuration or a job configuration. When a solver configuration or job configuration is run, no nodes are added or removed; it is computed "as is."

Running a study, on the other hand, can be different. When you compute a Study, it always runs the enabled configurations (see below). What the Study runs can be a Job or a Solver (for example, a Stationary Solver) depending on the study configuration. If a Job is run, it typically also means that a solver is also run (by the job). But before the study runs a job or a solver, it reconstructs the (enabled) configurations from scratch. An exception to this rule is when the enabled configurations are edited (an asterisk indicates this; see Figure 20-7 for an example), in which case the sequences are computed "as is."

ABOUT ENABLED STUDY OR SOLVER SEQUENCES

The particular sequence that is **Enabled** and runs when selecting **Compute** has a green border around its icon ( ). You can disable an enabled sequence by right-clicking the node and selecting **Disable** (which removes the green border). If no sequence is enabled when the study or solver configuration attempts to generate a sequence, a new sequence with default settings is generated. Only one sequence per study can be enabled. For job configurations, the sequence here means a unique path defined from a solver sequence to a job configuration and possibly another job configuration pointing to that job configuration, and so on. Also see Figure 20-6 for other examples of enabled sequences.

COMPUTING A STUDY OR SOLVER

The most straightforward method to compute a solution is to right-click the Study node ( ) and select **Compute** ( ) or press F8. You can also click **Compute** ( ) on the Main and Study toolbars and on the toolbar at the top of the study steps' and solver nodes' **Settings** windows.

By default, a study creates a Solution dataset and plot groups with results plots suitable for the physics interfaces for which you compute the solution. If you do not want to generate plots automatically, clear the **Generate default plots** check box in the **Study Settings** section in the main Study node's **Settings** window.

If the study contains more than one study step, and you want to compute only a part of the study steps, right-click a study step and select:

- **Compute Selected Step** ( ) (or press F7) to compute just the selected study step.
- **Compute to Selected** ( ) to compute from the first to the selected study step.
- **Compute from Selected** ( ) to compute for all study steps from the selected study step to the last.

If you show the solver sequences under **Solver Configurations**, you can right-click any node in a solver sequence and select:

- **Compute** ( ) (or press F8) to compute the entire solver sequence.
- **Compute to Selected** ( ) (or press F7) to compute the solver sequence from the top down to the selected node.
- **Compute from Selected** ( ) to compute from the **Compile Equations** node ( ) that is associated with the selected node down to the end of the solver sequence.

UPDATING A SOLUTION

To update the solution for a study to use the current values of parameters and user-defined variables, right-click the **Study** node and select **Update Solution** ( ) (or press F5).

Updating the solution updates the current study (if selected) or all studies if no study is selected. This is useful in the following situations when you have:

- Added or edited variables or parameters and want to use these during postprocessing without having to solve the model again.
- Changed the element order and want to interpolate the solution onto the new elements for results analysis or other purposes.
- Remeshed or modified a geometry and want to interpolate the solution onto the new geometry for results analysis or other purposes.

In all these cases, the COMSOL software passes or interpolates the solution to the resulting datasets but does not recompute it to reflect any changes in variables, equations, mesh, or geometry.

	If you make changes to the model that affect the solution, you must recompute the solution; just updating the solution does not take such changes into account.

COMPUTING A SOLVER CONFIGURATION

When you have added study steps to a study, a Solver Configurations (and maybe a Job Configurations) sequence is generated when the Study is computed. The Solver Configurations branch represents the solvers, dependent variables and degrees of freedom, and other study-related functionality that the study steps require.

	A Solver Configurations or Job Configurations node displays automatically if it has content. Otherwise, if you click the **Show More Options** button ( ) and select **Solver and Job Configurations** in the **Show More Options** dialog box, it is available as an option from the context menu.

In some cases, the default settings in the study steps are not sufficient to specify the details of how to obtain a solution. In this case you can edit the sequence and run it again. See Editing and Re-Running a Solver Configuration below.

To compute a solution:

- Under **Solver Configurations**, right-click the corresponding **Solution** node and select **Compute**.
- Right-click a Study node and select **Compute** to compute the enabled solver (the node with a green border around its icon), if such a solver configuration exists. If no solver configuration exists, or if all sequences are disabled, a new solver configuration is generated and computed.

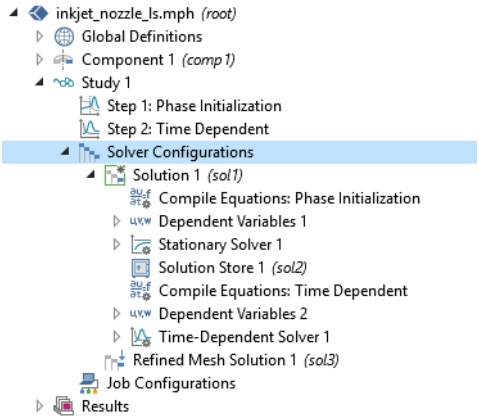

Figure 20-7: A Solver Configurations sequence with more than one solver. This is an example from the CFD Module Applications Libraries.

If you have already generated a solver configuration for the study, or if your solver configuration consists of several solvers, as with the study steps, you can right-click a configuration and choose:

- **Compute to Selected** ( ) (or press F7), to run a particular solver, or
- **Compute from Selected** ( ) to run the selected solver and all solvers below it in the sequence, or
- **Compute** (or press F8), to run the entire solver configuration.

For example, right-click a Dependent Variables node and select **Compute to Selected** to evaluate the initial values for the dependent variables (similar to the **Get Initial Value** and **Get Initial Value for Step** options for the main **Study** nodes and the study steps).

EDITING AND RE-RUNNING A SOLVER CONFIGURATION

The Solver Configurations branch nodes (or if applicable, the Job Configurations branch) can be edited to adjust solver settings, for example, if you want to change a tolerance or use a different time-stepping method. If you edit any settings in a subnode to a **Solution** node, an asterisk in the upper-right corner (Figure 20-8) indicates that the settings differ from the default settings for the study types in the study.

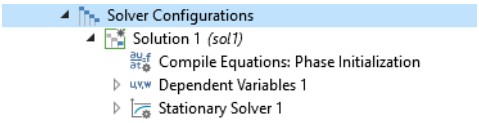

Figure 20-8: A Solution node has an asterisk in the icon to indicate the sequences that have been edited. To compute, highlight the Solution node, press F8, right-click and choose Compute, or click the button on the Settings window.

After editing a solver configuration, you run the sequence again. Running a solver configuration is tantamount to computing a solution. Like mesh nodes, solution nodes are not built automatically as they are added. It is possible to have several solver configurations under a Solver Configurations node (see Figure 20-7), including **Solver - Copy** nodes for copies of a solution (see Create Solution Copy).

PROGRESS AND LOG INFORMATION

While a problem is being solved, it is useful to know its progress. The Progress Window monitors the state of the analysis for the solvers during the solution process. In this window, you can Cancel or Stop a Solver Process and also continue the solver process. Alternatively, in The Log Window you can inspect convergence information and other data from the latest and earlier runs.

- Getting Results While Solving and Convergence Plots
- Computing the Initial Values

Getting Results While Solving

The ability to get numerical results and plots of the intermediate solutions while solving can be useful for diagnosing problems and for monitoring the progress of the solution. COMSOL Multiphysics supports the following ways of displaying results while solving:

- Plots in The Graphics Window: You can select any of the plot groups in the model to display while solving.
- Probe data in the **Table** window (see The Table Window and Tables Node) and associated line graphics in a separate **Probe Plot** window: You can include any probe defined in the model. See Probes.
- In the **Results While Solving** sections on the study step's **Settings** windows, you can control which plots to display while solving. See Common Study Step Settings.

Computing the Initial Values

In some situations you might want to evaluate and plot values, expressions, or functions that need not be solved for, such as initial values and functions evaluated using the initial values.

To make the initial values available for results evaluation and plotting, right-click the Study node ( ), and select **Get Initial Value** ( ). By default this plots the initial values of the variables solved for as specified by the **Field** subnode ( ) under a Dependent Variables node for the first study step in the solver configuration. For a parametric sweep, it uses the first parameter value.

For each study step you can also right-click and choose **Get Initial Value for Step**) to evaluate the initial value for that step. It is also possible to get the initial value for a particular solution under **Solver Configurations** by right-clicking a **Solution** node and selecting **Solution>Get Initial Value** ( ).

Also variables not solved for (such as a solution from a previous time-dependent or parametric analysis) can be made available for results evaluation and visualization. Select **Values of variables not solved for** from the **Keep solution** list under **Output** in the **Dependent Variables** node.

The Progress Window

The **Progress** window ( ) displays the progress of the mesher, solver, or postprocessing evaluation during the process, including a progress bar and progress information for each mesher, solver, or postprocessing evaluation. You can view the progress from the status bar in the lower-right corner of the COMSOL Desktop.

The solvers call each other in a hierarchical order: the adaptive solver calls the linear, nonlinear, parametric, eigenvalue, or time-dependent solver; the parametric solver calls the nonlinear or linear solver; the time-dependent, eigenvalue, linear, and nonlinear solvers all call both the assembly and the linear system solver. The solver hierarchy is visible in the Progress window because each solver adds its own line when it is called.

This window is always available but is empty when no progress information is available. For a log of the progress information, see The Log Window.

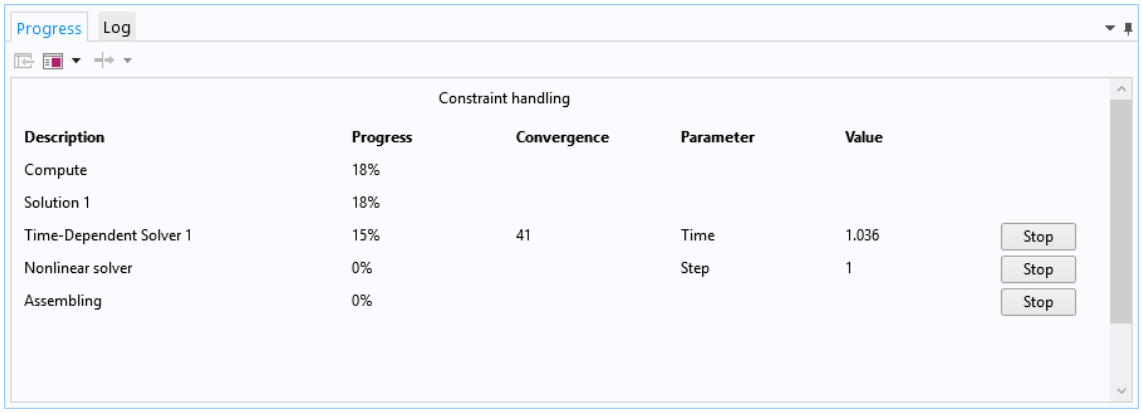

Figure 20-9: An example of the Progress Window solving a model.

The **Progress** window has the following columns:

- The **Description** column shows the solver name.
- The **Progress** column shows an estimate of the solver progress.
- The **Convergence** column shows an estimate of the solver's convergence if available. Also see Convergence Plots for more information.
- The **Parameter** and **Value** columns contain solver-dependent information: the adaptive solver shows the adaptive mesh generation number; the time-dependent solver shows the time; the parametric solver shows the parameter value; and the nonlinear solver and iterative linear system solvers show the iteration number.

	If you want to continue an interrupted parametric or time-dependent solution, for example, click **Continue**) in the **Progress** window's toolbar, and then choose the available study that you want to continue. You can also right-click the main **Study** node and choose **Continue**, or click the **Continue** button in the **Study** ribbon, to, for example, continue a stopped or interrupted time-dependent solution or parametric sweep.

CANCEL OR STOP A SOLVER PROCESS

You can cancel or stop the solver process if the model's solving time or likelihood for convergence is not progressing as expected. Use the horizontal or vertical scrollbars if needed. On the status bar you can follow the progress, cancel the solver process by clicking the **Cancel** button ( ), or click the **Progress** button ( ) to open this window. In the same way, you can also cancel the meshing and the evaluation during postprocessing.

You can use the **Stop** buttons that appear at each solver level to stop the solver's execution. When you click a **Stop** button, the COMSOL software returns a current approximation to the solution if possible. For example, when you click it at the adaptive solver level, the underlying linear, nonlinear, parametric, eigenvalue, or time-dependent solver continues until it is finished, but the adaptive solver stops at its current generation, immediately returning a solution. Similarly, you can click the **Stop** button to return the current iteration for the nonlinear solver or an iterative solver. Also use the **Stop** button during time stepping to return all time steps up to the current one. The parametric solver works similarly: To return the solutions for all parameter values up to the current one, click the **Stop** button.

	• Meshing • Convergence Plots

Convergence Plots

Convergence plots use graphics to show how an error estimate or time step evolves during the solution process for nonlinear, time dependent, and parametric solvers. By default convergence plots are generated.

To control which solvers generate convergence plots, click the **Convergence Plot Settings** ( ) button on The Progress Window toolbar to select or clear the convergence plots for each solver. For example, for a nonlinear time-dependent model, the menu that contains the nonlinear solver and Time-Dependent Solver (Generalized-alpha) as options.

By default, all solvers are selected, and the convergence plot for each solver appears in its own **Convergence Plot** window. Click to clear the check mark for a solver to turn off its convergence plot.

Click the **Copy Convergence Data to Model** button ( ) on the toolbar to copy the convergence data to a table in the **Table** window. Clicking this button is also the only way to keep the convergence plots in model files.

	NaNs (Not-a-Number entries) that appear in the tabulated convergence data represent breaks between multiple convergence cycles in an interactive solution process.

CONVERGENCE INFORMATION IN THE PLOTS

The convergence plots show an error estimate against the iteration number for the nonlinear solver and for the iterative linear system solvers (the Conjugate gradients, BiCGStab, GMRES, FGMRES, TFQMR, and multigrid solvers). See Convergence Criteria for Iterative Solvers.

For the nonlinear solver, the convergence plots show an error estimate for each nonlinear iteration number. These numbers also appear in The Log Window. The segregated solver shows one plot with one graph for each segregated step.

For the iterative linear system solvers, the error estimate for each linear iteration is a factor times the relative (preconditioned) residual. This number also appears in the Log window as **LinErr**. When these solvers are used together with the nonlinear solver, the graphs for the different linear-system solution steps are merged, and the plots use the accumulated number of iterations. Each linear solver used has a separate plot window.

When using the parametric solver, the graphs for the different parameter steps are merged, and the convergence plots use the accumulated number of iterations. The graphs for the different nonlinear and linear solve steps are concatenated. The plot uses the accumulated number of iterations.

When using a Time-Dependent Solver, the graph in the **Convergence Plot** window shows the reciprocal of the time step size versus the time step. That is, a convergence plot with decreasing values shows that the time-dependent solver takes longer time steps, and vice versa.

The error estimate numbers for the last iteration also appear in the **Convergence** column in The Progress Window.

CHANGING THE DEFAULT SETTINGS

Open the **Preferences** dialog box and click **Results** to edit the preferences for the plots that you can use to monitor solver convergence.

- The **Generate convergence plots** check box is selected by default. Clear that check box if you do not want the software to generate convergence plots.
- To control the size of the buffer used for storing the steps in the convergence plot, in the **Convergence plot buffer size (steps per plot)** field (default value: 10,000 steps).

The Log Window

The **Log** window () contains information from previous solver runs, including convergence information, solution time, and memory use. When a solver starts, the log window displays logs from all solver calls. This window is always available. For progress information during a solver or mesher process, see The Progress Window.

A horizontal divider (===============) indicates the start of a new solver progress log. To differentiate logs from different models, the log contains a horizontal divider displaying the name of the Model MPH-file each time a model is opened. For example,

```
================ Opened thin_layer_diffusion.mph =================
```

It also contains a similar divide when you save a model to a new file (using **Save As**):

```
================= Saved thin_layer_diffusion.mph =================
```

Arrows indicate the beginning and the end of the compile equation stage and the solver stage.

When the COMSOL Multiphysics software starts to compile the equations for the study, it prints the following information:

- The geometry shape order
- The processor and number of cores and sockets that COMSOL Multiphysics uses.
- The available memory, physical memory, and virtual memory.
- The time required for the equation compilation step.

When a solver starts working, it prints the name of the solvers used and then prints the number of degrees of freedom in the linear systems to be solved to the log. For certain problems, there are additional degrees of freedom involved in the discrete problem formulation that do not affect the size of the matrices assembled by the solver. These are called *internal degrees of freedom* and are displayed separately from the actual degrees of freedom in the log. For example, when solving plasticity problems in structural mechanics, plastic strains are represented by internal degrees of freedom. The log then contains information about if symmetric or nonsymmetric matrices are found and about the scales of the dependent variables. Depending on the solver and the detail level of the solver log (see the **Solver log** settings for the Advanced node), additional information is printed. With a detailed solver log, the log also contains information about the type of null-space function that is used.

When a solver has finished it reports the following information:

- The solution time (in seconds)
- The maximum amount of physical memory used (in MB)
- The maximum amount of virtual memory used (in MB)

If used, the log reports the out-of-core memory used in addition to the core (physical) memory.

For parallel and distributed simulations, the log also contains the memory used per node, and sections that are separated by

```
<<<<< Node X <<<<<<<<<<<<<<<<<<<<<<<<<<<<<<<<<<<<<<<<<<<<<<<<<<<<<<<<<<<<<<<<<<<
```

… some log information here

```
>>>>> Node X >>>>>>>>>>>>>>>>>>>>>>>>>>>>>>>>>>>>>>>>>>>>>>>>>>>>>>>>>>>>>>>>>>>
```

contain log information obtained from other nodes than Node 0 (or use the head node if that is used elsewhere). Log information without separators is log information from Node 0 (or the head node). This is the only log information that is updated live. All other log information is obtained after the logging operation is finished.

In addition, the log includes the following information that is specific to the type of solver:

- The Adaptive and Parametric Solver Log
- The Nonlinear Solver Log
- The Iterative Linear System Solver Logs
- The Time-Dependent Solver Log
- The Eigenvalue Solver Log
- The Optimization Solver Log

Also, see Pseudo Time Stepping for information about the CFL ratio in the log.

Scrolling in the Log Window

You can scroll the contents of the **Log** window to display information from earlier runs.

- Click the **Scroll Lock** button ( ) to stop the window from scrolling the log during a solver call, for example.
- Click the **Scroll Lock** button again to resume scrolling.
- Click the **Clear** button ( ) to clear the **Log** window from all information.

Buffer Size of the Log Window

By default, the buffer size of the **Log** window is limited to 300,000 characters.

	To change the size of the buffer, go to the **Preferences** dialog box, choose the **General** page, and, under **Log and messages**, then enter a maximum buffer size (in characters) in the **Log window size (characters)** field. The default is 300,000 characters. This buffer size also applies to the Log stored in the solvers for the last run.

THE ADAPTIVE AND PARAMETRIC SOLVER LOG

The Adaptive Mesh Refinement Solver prints a section in the log for each adaptive generation containing the current number of elements and a global error indicator value. The Parametric solver similarly outputs one section to the log for each parameter value.

The Stationary Solver, Time-Dependent Solver, and Eigenvalue Solver log their iterations.

THE NONLINEAR SOLVER LOG

The log from the nonlinear solver contains the following information:

- The iteration number (**Iter**).
- A relative error estimate, which is one of the following:
  - The solution error (**SolEst**), if **Solution** is selected from the **Termination criterion** list for the solver.
  - The residual error (**ResEst**), if **Residual** is selected from the **Termination criterion** list for the solver.
  - Both the solution error and the residual error (**SolEst** and **ResEst**), if **Solution or residual** or **Solution and residual** is selected from the **Termination criterion** list for the solver. The convergence is then based on the minimum of the solution error or the residual error multiplied by the residual factor.

    If the solver log detail is set to **Detailed** from the **Solver log** list in the **Advanced** node's **Settings** window, the residual error and the solution error (depending on the selected termination criterion) from each individual field in the model appear in the solver log.
- The damping factor used in each Newton step (**Damping**).
- Fraction of Newton and Cauchy steps for the Double dogleg solver (**Newton, Cauchy**).

- The size of the undamped Newton step (**Stepsize**) in the error estimate norm.
- The numbers of residuals (**#Res**), Jacobians (**#Jac**), and linear-system solutions computed (**#Sol**) so far.

THE DIRECT LINEAR SYSTEM SOLVER LOGS

The direct linear system solvers produce a log that additionally contains a relative error estimate (**LinErr**) and the relative residual (**LinRes**). The relative error is estimated by deferred correction (also called iterative improvement) — that is, by solving $A \cdot dx = r(x)$ for dx and setting $\mathrm{LinErr} = \mathrm{rhoB} \cdot \mathrm{norm}(dx)/\mathrm{norm}(x)$, where rhoB is the *factor in error estimate* value from the direct solver, and $r(x) = Ax - b$. The relative residual is the Euclidean norm of the residual divided by the norm of the linear system's right-hand side; that is, $\mathrm{LinRes} = \mathrm{norm}(r(x))/\mathrm{norm}(b)$.

THE ITERATIVE LINEAR SYSTEM SOLVER LOGS

The iterative linear system solvers produce a log that additionally contains the total number of linear iterations (**LinIt**), a relative error estimate (**LinErr**), and the relative residual (**LinRes**). The relative error estimate is a factor times the relative (preconditioned) residual. The relative residual is the Euclidean norm of the residual divided by the norm, $|b|$, of the linear system's right-hand side.

Convergence Criteria for Iterative Solvers

THE TIME-DEPENDENT SOLVER LOG

For the Time-Dependent Solver, the time-stepping algorithm produces a log that contains:

- The time step number (**Step**).
- Time (**Time**; output times are indicated with **out**).
- The step size (**Stepsize**).
- The number of residuals (**Res**), Jacobians (**Jac**), and linear system solutions (**Sol**) computed.

You can see also the order of accuracy of the method (**Order**), the number of error test failures in time stepping (**Tfail**), and the number of failures in the nonlinear iterations (**NLfail**). For iterative linear system solvers, the log also contains the total number of linear iterations, a linear error estimate, and a relative residual (see above). Failures in the nonlinear iterations (**NLfail**), for example, can affect the time stepping so that the solver takes smaller time steps.

If an iterative solver is used, the log includes the total number of iteration (**LinIt**), the relative residual (**LinRes**), and the linear error estimate (**LinEst**).

If you use the Runge-Kutta time-stepping methods with local time stepping, the log includes the local error (**LocError**). It is a weighted root mean square norm of the difference of the fourth-order and fifth-order solutions, or, for RK34, the difference of the third-order and fourth-order solutions. More specifically, it is the relative tolerance times the norm described in Absolute Tolerance Settings for the Time-Dependent Solver.

Also, for the detailed solver log, the time-dependent solver lists any algebraic variables at the start of the solution process.

THE EIGENVALUE SOLVER LOG

The Eigenvalue Solver produces a log that contains the iteration number (**Iter**), an error estimate (**ErrEst**), the number of converged eigenvalues (**Nconv**), and — if you are using an iterative linear solver — the number of linear iterations (**LinIt**).

THE OPTIMIZATION SOLVER LOG

SNOPT

The Optimization Solver (which requires the Optimization Module) algorithm used by the solver SNOPT is an iterative procedure that involves *major* and *minor* iterations. A major iteration results in a new solution candidate. For each major iteration, the optimization solver solves a quadratic-programming subproblem using an iterative procedure; these iterations are the minor iterations.

The log produced by the optimization solver SNOPT has the following data:

- The cumulative number of minor iterations (**Itns**).
- The current major iteration number (**Major**).
- The number of minor iterations for the current major iteration (**Minor**). This value should be 1 when the solver is close to the solution.
- The step length taken in the current search direction (**Step**). This value should be 1 when the solver is close to the solution.
- The number of times the multiphysics model has been solved (**nPDE**).
- The maximum complementarity gap (**Error**). It is an estimate of the degree of nonoptimality of the reduced costs. For convergence, this value should be smaller than the **Optimality tolerance**.
- The current value of the objective function (**Objective**).

MMA

The MMA solver implements another general-purpose optimization algorithm. The method is based on solving a sequence of approximating subproblems, one for each *inner* iteration. The subproblem is constructed from function values and gradients, which are evaluated once per *outer* iteration only. Each outer iteration requires one or more *inner* iterations, depending on whether the last subproblem was found to be conservative or not. Once a feasible point is found, outer iterates stay feasible. If the initial guess is infeasible or the feasible set is empty, nonzero infeasibilities may be reported.

The log produced by the MMA solver contains the following data:

- The cumulative number of outer iterations (**Iter**). One outer iteration per line is reported in the log.
- The number of inner iterations for the current outer iteration (**Inner**). This is the number of attempts needed to find a conservative approximating subproblem, which in some sense measures the nonlinearity of the problem.
- The cumulative number of model evaluations (**nPDE**). Each inner iteration requires a model evaluation in order to check the conservativeness of the approximation. Gradients are only computed once for each outer iteration.
- The estimated error (**Error**). The error is defined as the maximum relative change in any control variable since last outer iteration, computed as a percentage of the distance between the control variable's bounds.
- The current value of the objective function (**Objective**).
- The maximum violation of any constraint (**MaxInfeas**). For a feasible solution, this number must be zero. It may be nonzero in the first outer iterations if the initial guess is infeasible.

Levenberg-Marquardt

The optimization solver Levenberg-Marquardt is an iterative procedure used to solve least-squares problems. The log produced by the Levenberg-Marquardt solver contains the following data:

- The number of Levenberg-Marquardt iterations (**Itns**).
- The current Levenberg-Marquardt factor (**lmFact**). A small factor typically indicates fast convergence.
- The number of times the multiphysics model has been solved (**nPDE**).

- The maximum absolute value of the gradient (with respect to the control variables) of the objective function (**Gradient**).
- The estimated error based on the gradient, the objective function, and the control variables (**Error**). For convergence, this value should be smaller than the **Optimality tolerance**.
- The current value of the objective function (**Objective**).

The External Process Window

Use the **External Process** window ( ) to follow external processes (such as distributed batch jobs) that have been started. The window updates when you are attached to the external process. You can do operations that are performed in the External Process nodes under a Parametric or Batch job configuration by selecting an external process from the list and then selecting the operation. When detached, you can reattach by pressing the **Attach Job** button. The window opens automatically when you start a batch process. See Table 20-4 for descriptions of the toolbar buttons available on this window.

To open the **External Process** window:

- Windows users, from the **Home** toolbar select **Windows>External Process**.
- Cross platform (macOS and Linux) users, select **Windows>External Process**.

TABLE 20-4: EXTERNAL PROCESS TOOLBAR BUTTONS

ICON	NAME	DESCRIPTION
	Attach Job	If a job has been detached, click to reattach the job to run external processes and follow the status updates.
	Stop All Processes	Sends the stop command to unfinished jobs. Similar to using the Stop button for The Progress Window.
	Cancel All Processes	Sends the cancel command to unfinished jobs. Similar to using the Cancel button for The Progress Window.
	Stop Process	Stops the selected process. Similar to using the Stop button for The Progress Window.
	Cancel Process	Cancels the selected process. Similar to using the Cancel button for The Progress Window.
	Rerun Job	Restarts the selected job.
	Clear Status	Clears the status of the selected job. Useful when the status indicates that the process is running but the process has failed.
	Log	Shows the current log of the selected process.
	Open File	Opens the output file from the selected process.
	Batch Jobs (generated tables)	Selects the Batch Jobs to view.

- Studies: Batch, Cluster Sweep, Batch Sweep, and Cluster Computing
- Batch (Job Configurations)
- External Class

Solution Operation Nodes and Solvers

The first few sections provide some background information about the solvers and the algorithms used:

- Selecting a Stationary, Time-Dependent, or Eigenvalue Solver
- Remarks on Solver-Related Model Characteristics
- Scaling of Variables and Equations
- About the Stationary Solver
- About the Parametric Solver
- About the Time-Dependent Solver
- About the Time Discrete Solver
- The Eigenvalue Solver Algorithm
- The Modal Solver Algorithm
- The Time Explicit Solver Algorithms

	About Solver Commands in the *COMSOL Multiphysics Programming Reference Manual*

The settings for the solver operation nodes listed in Table 20-5 are detailed. There is also a list of the References for the Solution Operation Nodes and Solvers.

TABLE 20-5: SOLUTION OPERATION NODES

ICON	NAME	DESCRIPTION
	AWE Solver	Solve a parametric problem with asymptotic waveform evaluation.
u,v,w	Dependent Variables	Handles the dependent variables solved for (initial values, scaling) and dependent variables not solved for (prescribed values).
	Eigenvalue Solver	Solve linear or linearized eigenvalue problems (also called eigenfrequency problems). Also see The Eigenvalue Solver Algorithm.
	FFT Solver	Use a forward FFT to transform a time-dependent solution to the frequency domain or an inverse NFT/FFT to transform a frequency-domain solution to the time domain.
	Modal Solver	To solve either parameter stepping (also called frequency response) or time stepping (also called transient response) problems using a reduced model. Also see The Modal Solver Algorithm.
	Optimization Solver	Solve PDE-constrained optimization problems. Requires the Optimization Module.
	Plug Flow Solver	Solve a plug flow reactor model (requires the Chemical Reaction Engineering Module).
	Stationary Solver	Solve linear and nonlinear stationary problems (also called static or steady-state problems). Also see About the Stationary Solver.
	Time-Dependent Solver	Solve time-dependent problems (also called dynamic or unsteady problems) using the BDF, generalized-α, or one of the available Runge-Kutta type of time-stepping methods. Also see About the Time-Dependent Solver.

TABLE 20-5: SOLUTION OPERATION NODES

ICON	NAME	DESCRIPTION
	Time Discrete Solver	Solve time-dependent problems (dynamic or unsteady problems) that have already been discretized in time using, for example, the prev operator or the bdf operator.
	Time Explicit Solver	Solve time-dependent problems (also called dynamic or unsteady problems) using the family of Runge-Kutta explicit time-stepping schemes or the Adams-Bashforth 3 solver. Also see The Time Explicit Solver Algorithms.

Selecting a Stationary, Time-Dependent, or Eigenvalue Solver

The chosen study type adds the appropriate solvers for the study; you do not need to select one yourself. If you prefer to make a selection, the first question to ask is whether the problem is stationary or time dependent.

Most real-world phenomena develop in time, but you might know that the system under study approaches a *steady state* described by a stationary solution.

For a stationary problem, select the Stationary Solver. When solving the time-dependent coefficient form problem

$$e_a\frac{\partial^2 u}{\partial t^2} + d_a\frac{\partial u}{\partial t} + \nabla\cdot(-c\nabla u - \alpha u + \gamma) + \beta\cdot\nabla u + au = f$$

the stationary solver searches for a solution where $\partial u/\partial t = 0$. The Time-Dependent Solver and the stationary solver handle linear as well as nonlinear problems.

In some cases you might want to study the natural harmonic oscillations of a time-dependent problem. This involves finding the eigensolutions u with the associated eigenvalues λ in a PDE problem of the following form:

$$\nabla\cdot(-c\nabla u - \alpha u) + \beta\cdot\nabla u + au = \lambda d_a u - \lambda^2 e_a u$$

Such an analysis is particularly interesting in electromagnetics, structural mechanics, acoustics, and wave propagation. To study the eigensolutions and compute the eigenvalues (or eigenfrequencies), select the Eigenvalue Solver.

In addition to these fundamental solvers, COMSOL includes additional solvers for special applications such as an Optimization Solver (which requires the Optimization Module), a Time Discrete Solver, an AWE Solver, and a Plug Flow Solver (which requires the Chemical Reaction Engineering Module). Some of these solvers are connected to special functionality in the add-on modules.

- The Relationship Between Study Steps and Solver Configurations
- About the Stationary Solver
- The Eigenvalue Solver Algorithm
- About the Time-Dependent Solver

Remarks on Solver-Related Model Characteristics

THE IMPORTANCE OF A CORRECT JACOBIAN MATRIX

The solvers break down each problem — linear or nonlinear — into one or several linear systems of equations by approximating the given problem with a linearized problem. The coefficient matrix of the discretized linearized problem is called the *Jacobian matrix* (or *stiffness matrix*). In most cases COMSOL Multiphysics computes a correct Jacobian matrix.

The consequences of an incorrect Jacobian matrix depend on the solver in use:

- The linear stationary solver and the eigenvalue solver simply give an incorrect solution.
- The nonlinear stationary solver and the time-dependent solver take longer time to converge to the correct solution, and in some cases the solver even fails to find a solution. However, if the ignored terms have a very weak dependence on the sought solution, the impact on convergence speed is small.

An incorrect Jacobian matrix can occur in the following cases:

- If you supply an incorrect derivative of some of the user-defined functions and then use that function in some PDE coefficient or boundary condition specification with arguments that depend on the solution (for example, with the temperature as the function argument in a heat-transfer simulation).
- If you use a MATLAB M-file function or the External function interface, for which you have specified no derivative, and then call this function in some PDE or boundary condition with arguments that depend on the solution. A correct Jacobian can be computed if the function derivative is defined.
- If you use nonanalytic functions in a complex-valued problem, such as `real`, `imag`, `conj`, `abs`, or `arg`.
- If you use the `nojac` operator.

WORKING WITH COMPLEX-VALUED PROBLEMS

When a problem contains complex numbers, be sure to consider the following two aspects:

- For time-dependent problems, the time-stepping algorithm must know if a problem is complex-valued. If your model uses a complex-valued initial solution, the COMSOL software detects this and classifies the problem accordingly. If the problem is complex-valued because of a complex-valued PDE coefficient or other material property, go to the **Time-Dependent Solver** node's **Settings** window, and in the **Advanced** section select the **Allow complex numbers** check box.
- If you expect to receive complex outputs from real inputs in elementary functions such as `sqrt`, `log`, and `asin`, or when evaluating a nonintegral power of a negative number, add an Advanced subnode. Then in the **Settings** window under **General**, select the **Allow complex-valued output from functions with real input** check box. By default, the COMSOL software gives an error message if a real input to a function generates a complex output.

Scaling of Variables and Equations

If the dependent variables in a model have widely different magnitudes, the solver might have problems with the resulting ill-conditioned matrix. The scaling of the dependent variables also influences the weighted errors computed by the solvers. For instance, in a structural mechanics problem the displacements can be of the order of 0.0001 m while the stresses are 1,000,000 Pa (1 MPa). To remedy this situation, the COMSOL solvers internally rescale the variables so that a well-scaled system results.

The rescaling of the discretized linear system occurs before constraint handling. Assume that the degrees of freedom U_i are expressed terms of rescaled degrees of freedom $\tilde{U}_i$ according to the formula

$$U_i = s_i \tilde{U}_i$$

where s_i are positive scale factors. Using a diagonal matrix S, the relation between U and $\tilde{U}$ is $U = S\tilde{U}$, and you can write the rescaled linear system as

$$\begin{bmatrix} \tilde{K} & \tilde{N}_F \\ \tilde{N} & 0 \end{bmatrix} \begin{bmatrix} \tilde{U} \\ \tilde{\Lambda} \end{bmatrix} = \begin{bmatrix} \tilde{L} \\ \tilde{M} \end{bmatrix}$$

where

$$\Lambda = R\tilde{\Lambda} \qquad \tilde{N}_F = SN_FR \qquad \tilde{K} = SKS \qquad \tilde{N} = RNS$$

and

$$\tilde{L} = SL, \quad \tilde{M} = RM$$

Here, R is a diagonal matrix of positive scale factors chosen such that the rows in the matrix $\tilde{N}$ are of magnitude 1.

About the Stationary Solver

The following background information about the Stationary Solver discusses these topics: Damped Newton Methods, Termination Criterion for the Fully Coupled and Segregated Attribute Nodes, Linear Solvers versus Nonlinear Solvers, and Pseudo Time Stepping. Also see Selecting a Stationary, Time-Dependent, or Eigenvalue Solver.

	Stationary in the *COMSOL Multiphysics Programming Reference Manual*

DAMPED NEWTON METHODS

The nonlinear solver uses an affine invariant form of the damped Newton method as described in Ref. 3. You can write the discrete form of the equations as $f(U) = 0$, where $f(U)$ is the residual vector and U is the solution vector. Starting with the initial guess U_0, the software forms the linearized model using U_0 as the linearization point. It solves the discretized form of the linearized model $f'(U_0)\delta U = -f(U_0)$ for the Newton step δU using the selected linear system solver ($f'(U_0)$ is the Jacobian matrix). It then computes the new iteration $U_1 = U_0 + \lambda\delta U$, where λ ($0 \le \lambda \le 1$) is the damping factor. Next the modified Newton correction estimates the error E for the new iteration U_1 by solving $f'(U_0)E = -f(U_1)$. If the relative error corresponding to E is larger than the relative error in the previous iteration, the algorithm reduces the damping factor λ and recomputes U_1. This algorithm repeats the damping-factor reduction until the relative error is less than in the previous iteration or until the damping factor underflows the minimum damping factor. When it has taken a successful step U_1, the algorithm proceeds with the next Newton iteration.

A value of $\lambda = 1$ results in Newton's method, which converges quadratically if the initial guess U_0 is sufficiently close to a solution. In order to enlarge the domain of attraction, the solver chooses the damping factors judiciously. Nevertheless, the success of a nonlinear solver depends heavily on a carefully selected initial guess, so you should provide the best value for U_0, giving at least an order of magnitude guess for different solution components.

TERMINATION CRITERION FOR THE FULLY COUPLED AND SEGREGATED ATTRIBUTE NODES

You specify the termination criteria in the **Settings** window for a Fully Coupled or Segregated subnode to the Stationary Solver node. Also see The Segregated Solver (Termination Criterion for a Segregated Solver).

Termination Criterion: Solution

For **Termination criterion: Solution**, the nonlinear iterations terminate when the following convergence criterion is satisfied: Let U be the current approximation to the true solution vector, and let E be the estimated error in this vector. The software stops the iterations when the relative tolerance exceeds the relative error computed as the following weighted Euclidean norm:

$$\text{err} = \sqrt{\frac{1}{M}}\sqrt{\sum_{j=1}^{M}\frac{1}{N_j}\sum_{i=1}^{N_j}\left(\frac{|E_{i,j}|}{W_{i,j}}\right)^2}$$

Here M is the number of fields; N_j is the number of degrees of freedom in field j. The double subscript denotes degree of freedom index (i) and field (j) component. Let $W_{i,j} = \max(|U_{i,j}|, S_j)$, where S_j is a scale factor that the solver determines from the scaling method. You select the scaling method from the **Method** list in the **Scaling** section of the Dependent Variables node's **Settings** window. The solver then computes the scale factor S_j using the following rules:

- For **Automatic**, S_j is the average of $|U_{i,j}|$ for all DOFs i for fixed j, times a factor equal to 10^{-5} for highly nonlinear problems or 0.1 otherwise.
- For **Manual**, S_j is the value given in the **Scale** field. S_j is multiplied by a factor equal to 10^{-5} for highly nonlinear problems or 0.1 otherwise
- For **Initial value based**, S_j is the average of $|V_{i,j}|$ for all DOFs i with fixed j times a factor equal to 10^{-5} for highly nonlinear problems or 0.1 otherwise. $V = U_0$ is the solution vector corresponding to the initial value. In case all DOFs are zero for that particular field j, the total mean of $|V_{i,j}|$ for all i and j is used instead.
- For **None**, $W_{i,j} = 1$. In this case, err is an estimate for the absolute error.

	The (automatically damped Newton) nonlinear solver only checks the convergence criterion if the damping factor for the current iteration is equal to 1. Thus, the solver continues as long as the damping factor is not equal to 1 even if the estimated error is smaller than the requested relative tolerance.

Termination Criterion: Residual

For **Termination criterion: Residual**, the nonlinear iterations terminate when the following convergence criterion is satisfied: The software stops the iterations when the relative tolerance exceeds the relative error computed as the weighted Euclidean norm

$$\text{err} = \sqrt{\frac{1}{M}}\sqrt{\sum_{j=1}^{M}\frac{1}{N_j\tilde{W}_j^{\,2}}\sum_{i=1}^{N_j}|F_{i,j}|^2}$$

where F is the current residual. The weights are determined considering both the initial residual f_0 and the residual after the first iteration f_1 as $f = 0.5\,|f_0| + 0.5\,|f_1|$. In the equation above, the double subscript denotes the degree of freedom index (i) and the field (j) component. The iterations can also terminate if the relative step size is in the range of a hundred machine epsilon and in addition a full Newton step is taken.

You select the scaling method from the **Method** list in the **Residual Scaling** section of the **Dependent Variables** node's **Settings** window. The solver then computes the weights $\tilde{W}_j$ using the following rules:

- For **Automatic**, $\tilde{W}_j$ is the average of $f_{i,j}$ for all DOFs i for a fixed j. In case all $f_{i,j}$:s are zero for that particular field j, the total mean of $f_{i,j}$ for all i and j is used instead.
- For **Manual**, $\tilde{W}_j$ is the value given in the **Scaling** field.

Termination Criterion: Solution or Residual

For **Termination criterion: Solution or residual**, the nonlinear iterations terminate when the relative tolerance exceeds the relative error computed as the minimum of the solution-based error and the error given by the **Residual factor** times the residual-based error above.

Termination Criterion: Solution and Residual

For **Termination criterion: Solution and residual**, the nonlinear iterations terminate the Newton iterations on a solution-based estimated relative error and a residual-based estimated relative error given by the **Residual factor** times the residual-based error above.

LINEAR SOLVERS VERSUS NONLINEAR SOLVERS

Automatic Nonlinearity Detection

COMSOL Multiphysics automatically detects nonlinearity, so you normally do not need to decide whether to use a linear or a nonlinear solver.

The automatic detection works through analysis of the variables contributing to the residual Jacobian matrix and the constraint Jacobian matrix. If the algorithm finds that both these matrices are complete and do not depend on the solution, the stationary solver (including parametric sweeps) uses a linear solver algorithm. Otherwise, the solver uses a nonlinear solver algorithm. "Complete" here means that the algorithm only found contributing variables for which the correct Jacobian is computed.

Overriding the Automatic Nonlinearity Detection

In some cases you might want to specify explicitly that the stationary solver uses the linear or nonlinear solver algorithm. Such cases include:

- Linear models where the automatic detection of linearity makes COMSOL Multiphysics use the nonlinear solver. This can happen, for example, for models that involve some less common types of coupling variables (directly or indirectly as part of some boundary conditions). The nonlinear solver usually converges directly for linear problems, but if that is not the case, you can switch to the linear solver.
- Using the linear solver to single-step Newton's method for a nonlinear problem.
- Using the linear solver to solve a linearized (nonlinear) problem.

Which Models Are Nonlinear?

How do you determine if a problem is linear or nonlinear? Finding out is not always easy, but for most physics you can apply the following criterion: If any coefficient or material property contains a dependent variable, the model is nonlinear. The same holds true for models based on a PDE in the coefficient form, again with the same criterion.

There are some special cases that arise with some physics interfaces. First, in the Heat Transfer physics interfaces, if you include radiation terms for blackbody radiation, which depend on temperature according to the Stefan-Boltzmann law, the problem is nonlinear. Second, Single-Phase Flow is always nonlinear, unless the convective terms in the momentum equations have been omitted, resulting in the linear Stokes equations.

Whether your problem is linear or nonlinear, the solvers break it down into one or several linear systems of equations. Therefore, the linear solver selection affects the solution time and memory requirements also for nonlinear models.

PSEUDO TIME STEPPING

A pseudo time-stepping method is used in transport problems to stabilize the convergence toward steady state. Here an adaptive feedback controller controls a CFL (Courant–Friedrichs–Lewy) number, which is then used for pseudo time stepping. The CFL number starts from a moderate value (order one) and increases up to several orders of magnitude at convergence.

A simple multiplicative PID controller for CFL control is used

$$\mathrm{CFL}_{n+1} = \left(\frac{e_{n-1}}{e_n}\right)^{k_P}\left(\frac{\mathrm{tol}}{e_n}\right)^{k_I}\left(\frac{e_{n-1}/e_n}{e_{n-2}/e_{n-1}}\right)^{k_D}\mathrm{CFL}_n \tag{20-6}$$

where the controller parameters k_P, k_I, and k_D for the proportional, integral, and derivative parts, respectively, are positive constants. Here e_n is the nonlinear error estimate for step n and tol is a given target error estimate.

- The first factor is nothing but a power of the current convergence rate (based on the last two steps), and is the most important part of this controller. If the error is decreasing, the controller increases the CFL number and if the error is increasing, the controller decreases the CFL number. The strength of this coupling (and the rapidness of this effect) is controlled by the parameter k_P.
- The next factor is used to control the CFL number toward the requested target error estimate. A standard local error estimate control uses only a factor of this sort, but for this type of control, the absolute level of the error is not that important. However, without this factor (k_I=0), the CFL number might drift even though the error level is fluctuating on the same level. This factor can also be used to select an absolute regime for the error where increasing the CFL number should be more difficult.
- The last factor is a derivative factor; it is affected by the change of the convergence rate.

A hard lower limit $\mathrm{CFL}_n \geq 1$ is used, and to lower the risk of premature termination there is an extra requirement of not accepting convergence until $\mathrm{CFL}_n \geq \mathrm{CFL}_\infty = 10^4$.

After each segregated solver iteration, the log reports the Pseudo time-stepping CFL-ratio defined as $\min(\log(\mathrm{CFL})/\log(\mathrm{CFL}_\infty),1.0)$, where $\mathrm{CFL}_\infty = 10^4$ is the steady-state CFL number. The CFL ratio concerns the overall progress of the segregated solver and not individual groups. Convergence is allowed when this number is one and the usual convergence criteria are met.

Pseudo time stepping is available for stationary problems. In the coupled approach, it functions together with the constant damped Newton solver. See the settings for Fully Coupled and Segregated for related parameters.

About the Parametric Solver

The parametric solver supports two algorithms, continuation and no continuation (*plain sweep*). To use continuation you need to both select the **Auxiliary Sweep** check box as well as select one of the parameters as the continuation parameter from the list under **Study Extensions** on the **Stationary or Frequency Domain** node's **Settings** window. Continuation can only be used for one parameter; the others are run as a plain sweep outside the continuation sweep.

When you add a Stationary or Frequency Domain study, a *parametric continuation solver* is used to find the solution to a sequence of stationary PDE problems that arise when you vary some parameter of interest. This can be any parameter that defines an equation, boundary condition, material property, or similar property of the physics but not parameters that, for example, vary the geometry or mesh (for such a parameterization, use a Parametric Sweep). The parametric solver can also prove useful when it is difficult to get convergence in a nonlinear model. You can then introduce a parameter such that the solution is easy if the parameter is small. Then, to obtain the solution for the desired value of the parameter, slowly increase its value. This way, the nonlinear solver gets a good initial guess based on the solution for the previous parameter value.

About the Time-Dependent Solver

The following background information about the Time-Dependent Solver discusses these topics: The Implicit Time-Dependent Solver Algorithms and BDF vs. Generalized-α and Runge-Kutta Methods. Also see Selecting a Stationary, Time-Dependent, or Eigenvalue Solver.

	Time in the *COMSOL Multiphysics Programming Reference Manual*.

THE IMPLICIT TIME-DEPENDENT SOLVER ALGORITHMS

The finite element discretization of the time-dependent PDE problem is

$$0 = L(U, \dot{U}, \ddot{U}, t) - N_F(U, t)\Lambda$$
$$0 = M(U, t)$$

which is often referred to as the *method of lines*. Before solving this system, the algorithm eliminates the Lagrange multipliers Λ. If the constraints $0 = M$ are linear and time independent and if the constraint force Jacobian N_F is constant, then the algorithm also eliminates the constraints from the system. Otherwise it keeps the constraints, leading to a differential-algebraic system.

In COMSOL Multiphysics, the *IDA* and *generalized-α* solvers are available to solve the above ODE or DAE system:

- IDA was created at the Lawrence Livermore National Laboratory (Ref. 4) and is a modernized implementation of the DAE solver DASPK (Ref. 5), which uses variable-order variable-step-size backward differentiation formulas (BDF). Optionally, a nonlinear controller can provide more careful time-step control, which can reduce the thrashing of time steps that increases the number of time steps and degrades performance for highly nonlinear problems in CFD, for example. See Ref. 6 for more information about the nonlinear controller (STAB controller).
- Generalized-α is an implicit, second-order accurate method with a parameter α or ρ_∞ ($0 \le \rho_\infty \le 1$) to control the damping of high frequencies. With $\rho_\infty = 1$, the method has no numerical damping. For linear problems, this corresponds to the midpoint rule. $\rho_\infty = 0$ gives the maximal numerical damping; for linear problems the highest frequency is then annihilated in one step. The method was first developed for second-order equations in structural mechanics (Ref. 9) and later extended to first-order systems (Ref. 10).

For implicit time-stepping schemes, a nonlinear solver is used to update the variables at each time step. The nonlinear solver used is controlled by the active Fully Coupled and Segregated solver subnodes. These subnodes provide much control of the nonlinear solution process: It is possible to choose the nonlinear tolerance, damping factor, how often the Jacobian is updated, and other settings such that the algorithm solves the nonlinear system more efficiently.

For the BDF (IDAS) solver there is another alternative, and that is to use the built-in nonlinear solver IDAS. This solver is used when all **Fully Coupled** and **Segregated** nodes are disabled. The linear solver is in this case controlled by the active linear solver subnode.

The linearization of the above system used in the Newton iteration is

$$E\ddot{V} + D\dot{V} + KV = L - N_F\Lambda$$
$$NV = M$$

where $K = -\partial L/\partial U$ is the stiffness matrix,

$$D = -\partial L/\partial \dot{U}$$

is the damping matrix, and

$$E = -\partial L/\partial \ddot{U}$$

is the mass matrix. When $E = 0$, D is often called the mass matrix.

When using IDA for problems with second-order time derivatives ($E \neq 0$), extra variables are internally introduced so that it is possible to form a first-order time-derivative system (this does not happen when using generalized-α

because it can integrate second-order equations). The vector of extra variables, here U_v, comes with the extra equation

$$\dot{U} = U_v$$

where U denotes the vector of original variables. This procedure expands the original ODE or DAE system to double its original size, but the linearized system is reduced to the original size with the matrix $E + \sigma D + \sigma^2 K$, where σ is a scalar inversely proportional to the time step. By the added equation, the original variable U is therefore always a differential variable (index-0). The error test excludes the variable U_v unless consistent initialization is on, in which case the differential U_v-variables are included in the error test and the error estimation strategy applies to the algebraic U_v-variables.

Absolute Tolerance Settings for the Time-Dependent Solver

For the Time-Dependent Solver under the section **Absolute Tolerance**, the absolute and relative tolerances control the error in each integration step. More specifically, let U be the solution vector corresponding to the solution at a certain time step, and let E be the solver's estimate of the (local) absolute error in U committed during this time step. For the **Unscaled** method, the step is accepted if

$$\left(\frac{1}{M}\sum_j \frac{1}{N_j}\sum_i \left(\frac{|E_i|}{A_{\mathrm{us},i} + R|U_i|}\right)^2\right)^{1/2} < 1$$

where $A_{\mathrm{us},i}$ is the unscaled absolute tolerance for DOF i, R is the relative tolerance, M is the number of fields, and N_j is the number of degrees of freedom in field j. The numbers $A_{\mathrm{us},i}$ are computed from a conversion of the input value A_k for the corresponding dependent variable k. For degrees of freedom for Lagrange shape functions or for ODEs, these values are the same as entered (that is, $A_{\mathrm{us},i} = A_k$), but for vector elements there is a field-to-DOF conversion factor involved.

For the **Scaled** method and when you select **Update scaled absolute tolerance**, the step is accepted if

$$\left(\frac{1}{M}\sum_j \frac{1}{N_j}\sum_i \left(\frac{|E_{Y_i}|}{A_{\mathrm{s},i} + R|Y_i|}\right)^2\right)^{1/2} < 1$$

where E_Y is the solver's estimate of the (local) absolute error in Y, $A_{s,i}$ is the scaled absolute tolerance for DOF i, M is the number of fields, R is the relative tolerance, N_j is the number of degrees of freedom in field j, and Y_i is the scaled solution vector. For dependent variables that are using the scaling method **Automatic**, the numbers $A_{\mathrm{s},i}$ are computed from the input values A_k according to the formula

$$A_{\mathrm{s},i} = A_{k_i}(\beta + \|Y\|_{2,i}) \qquad \beta = \begin{cases} (1 - e^{-\alpha j})\|Y\|_{\infty,k_i} + e^{-\alpha j} & 0 < \|Y\|_{\infty,k_i} < 1 \\ 1 & \text{else} \end{cases}$$

where $\alpha = 1/5$, j is the time-step iteration number $j = 0,1,\ldots$, and $\|Y\|_{2,k_i}$, $\|Y\|_{\infty,k_i}$ are the 2-norm and maximum norm of the dependent variable k_i, respectively. Here A_{k_i} is the converted input value A_k for the field k and DOF i. For dependent variables that are using another scaling method or when the **Update scaled absolute tolerance** check box is cleared, then $A_{\mathrm{s},i} = A_{k_i}$.

Note that with the **Tolerance method** set to **Factor**, the absolute tolerance is specified as a factor of the relative tolerance. If you use a specific absolute tolerance instead, that value can reduce the effect of further reductions of the relative tolerance (so that when $R|U_i| \approx A_i$, the effect of further reductions of the relative tolerance diminishes).

If the solution is smaller than the absolute tolerance, there is no accuracy at all.

For DAEs (differential-algebraic equations), you can exclude the algebraic equations from the error estimation so that the error is only based on the differential equations. See Advanced for information about excluding algebraic equations from the error estimate.

BDF VS. GENERALIZED-α AND RUNGE-KUTTA METHODS

The BDF solver uses backward differentiation formulas with order of accuracy varying from one (that is, backward Euler) to five. BDF methods have been used for a long time and are known for their stability. However, they can have severe damping effects, especially the lower-order methods. Backward Euler severely damps any high frequencies. Even if you are expecting a solution with sharp gradients, you might get a very smooth solution due to the damping in the backward Euler method.

The generalized-α (alpha) solver has properties similar to the second-order BDF solver but the underlying technology is different. It contains a parameter, called α in the literature, to control the degree of damping of high frequencies. Compared to BDF (with maximum order two), generalized-α causes much less damping and is thereby more accurate. For the same reason it is also less stable.

The implementation of the generalized-α method in COMSOL Multiphysics detects which variables are first order in time and which variables are second order in time and applies the correct formulas to the variables.

In many cases, generalized-α is an accurate method with good enough stability properties, but the BDF method is more robust and better at handling changes to the time step. The generalized-α method is preferred for simulations when the time step is almost constant and when small or minimal damping is needed, such as pure vibration problems. For that reason, some physics interfaces in COMSOL Multiphysics — for structural mechanics and electromagnetic waves, for example — use generalized-α as the default transient solver. Some complicated problems, however, need the extra robustness provided by the BDF method.

There are also some problem types, like ODE systems, that can benefit from the higher accuracy that higher-order BDF methods provide. For such ODE systems, the explicit methods from the Runge-Kutta family of methods for ODEs — RK34, Cash-Karp 5, and Dormand-Prince 5 — can be the most efficient.

About the Time Discrete Solver

The Time Discrete Solver is used to solve fluid dynamics problems using a projection method. Also, you can use the time-discrete solver to solve problems that have been discretized in time using the `prev` or `bdf` operator.

In the time-discrete solver you cannot use the `d` operator to get the time derivatives. That is why the `prev` operator is needed so that time derivatives can be written using the backward Euler method. However, the `prev` operator does not make it possible to define variables like this:

```
a=f(prev(a))
```

That is, you cannot use the time-discrete solver to solve incremental problems in time because a variable cannot be expressed in terms of itself. Such a formulation leads to a circular variable dependency. If you want to implement a variable that is dependent on itself, that variable must be a dependent variable that you solve for as a continuous ODE or PDE.

The time-discrete solver is not intended for solving general time-dependent structural mechanics problems. What is obtained with the time-discrete solver is a quasi-stationary approach; the inertial terms are not included. Also, it is more correct to compare the results using the time-discrete solver with those using the generalized-α solver with manual time stepping because for both of these solvers, no error checking is done for the local time error.

TimeDiscrete in the *COMSOL Multiphysics Programming Reference Manual*.

The Eigenvalue Solver Algorithm

The Eigenvalue Solver algorithm is described in this section. Also see Selecting a Stationary, Time-Dependent, or Eigenvalue Solver.

Finite element discretization leads to the generalized eigenvalue system

$$(\lambda - \lambda_0)^2 EU - (\lambda - \lambda_0)DU + KU + N_F\Lambda = 0$$
$$NU = 0$$

where the solver evaluates E, D, K, N, and N_F for the solution vector U_0; λ denotes the eigenvalue; and λ_0 is the linearization point. If $E = 0$, it is a linear eigenvalue problem; if E is nonzero, it is a quadratic eigenvalue problem. To solve the quadratic eigenvalue problem, COMSOL Multiphysics reformulates it as a linear eigenvalue problem. After constraint handling, it is possible to write the system in the form $Ax = \lambda Bx$.

More general eigenvalue problems sometimes arise when boundary conditions or material properties are nonlinear functions of the eigenvalue. These cases can be handled as a series of quadratic eigenvalue problems. COMSOL Multiphysics treats general dependences on the eigenvalue by assembling a quadratic approximation around the eigenvalue linearization point λ_0. Normally, iteratively updating the linearization point leads to rapid convergence.

Finding the eigenvalues closest to the *shift* σ is equivalent to computing the largest eigenvalues of the matrix $C = (A - \sigma B)^{-1}B$. To do this, the solver uses the ARPACK FORTRAN routines for large-scale eigenvalue problems (Ref. 12). This code is based on a variant of the Arnoldi algorithm called the *implicitly restarted Arnoldi method* (IRAM). The ARPACK routines must perform several matrix-vector multiplications Cv, which they accomplish by solving the linear system $(A - \sigma B)x = Bv$ using one of the linear system solvers.

THE EIGENVALUE REGION SEARCH METHOD

The eigenvalue region method uses an algorithm based on ARPACK that makes it possible to find all eigenvalues within a given, sufficiently small region (rectangle) in the complex plane. The algorithm uses ARPACK to find eigenvalues covering a rectangle in the complex plane containing the sought eigenvalues; that is, there are eigenvalues with real or imaginary parts larger and smaller than the given smallest and largest real or imaginary parts. In an optional consistency check, a Schur basis corresponding to the found eigenvalues is used as input to ARPACK for a search for an additional eigenvalue. The initial vector is taken to be orthogonal to the Schur basis. If the new eigenvalue falls outside the rectangle spanned by the eigenvalues previously found, the algorithm uses this information as an indication that all desired eigenvalues are found and the algorithm terminated successfully. The algorithm uses the following inputs:

- Four numbers defining a rectangle in the complex plane: the largest real number, smallest real number, largest imaginary number, and smallest imaginary number. If the largest and smallest real or imaginary numbers are equal, the algorithm considers only an interval on the real or imaginary axis, respectively.
- An approximate number of eigenvalues.
- The maximum number of eigenvalues.

The shift is taken as the center of the rectangle of sought eigenvalues.

The Eigenvalue Region Algorithm

The eigenvalue region method starts by searching for the given approximate number of eigenvalues. If the converged eigenvalues cover the sought region, it may perform an optional consistency check where it searches for an additional eigenvalue using a Schur basis corresponding to the found eigenvalues covering the sought region

and an initial vector guess orthogonal to this basis as input to ARPACK. If the new eigenvalue lies outside the covering rectangle, the algorithm terminates successfully, and the eigenvalues within the sought region are returned. If the new eigenvalue lies inside the covering rectangle, there may be additional eigenvalues within the sought region, and a warning is issued to decrease the region where eigenvalues are sought.

If the converged eigenvalues do not cover the sought region, the number of eigenvalues searched for is doubled. The **Log** window then shows `Searching for more eigenvalues`. If the number of eigenvalues searched for has already been doubled and no additional eigenvalues have been found within the region, a warning is issued. The warning shows, for example, that no (transformed) eigenvalue with a smaller real part is found. It is then advised to decrease the size of the region where you want to search for eigenvalues.

The number of eigenvalues sought for can be reduced by the algorithm if the given approximate number of eigenvalues is found to be larger than the number of eigenvalues inside and close to the sought region. The *LOG* window then shows `Searching for fewer eigenvalues`.

The All Eigenvalues Algorithm

With the option All (filled matrix), COMSOL Multiphysics uses a LAPACK algorithm for finding all eigenvalues and eigenmodes using a filled system matrix for small eigenvalue problems.

Eigenvalue in the *COMSOL Multiphysics Programming Reference Manual*.

The Modal Solver Algorithm

The purpose of the Modal Solver is to speed up certain simulations by performing a model reduction using eigenpairs, making use of the solution to an eigenvalue or eigenfrequency problem to construct a basis using eigenvectors corresponding to the dominant dynamics. That is, the solution of the underlying system of equations is approximated by a linear combination of parametric or time-dependent coefficients and a few dominant eigenvectors.

The equation of interest can be written as

$$E\ddot{u} + D\dot{u} + Ku = L, \tag{20-7}$$

where E is the mass matrix, D is the damping matrix, K is the stiffness matrix, and L is the load vector. Either E or D can be identically zero. The modal solver algorithm requires that a few eigenvectors have been computed. If you form a matrix Φ whose columns are m computed eigenvectors, and all appearing Dirichlet boundary conditions are homogeneous, then an approximation u_m of the solution u can be written as

$$u_m = \Phi_r q, \tag{20-8}$$

where q is a small vector of unknown coefficients. Replacing u in Equation 20-7 by u_m and premultiplying by Φ^H yield

$$E_m\ddot{q} + D_m\dot{q} + K_m\Phi_r q = \Phi^H L, \tag{20-9}$$

where $E_m = \Phi^H E\Phi$, $D_m = \Phi^H D\Phi$, and $K_m = \Phi^H K\Phi$.

The damping matrix D may be present when performing the eigenvalue analysis. It is, however, possible to add additional damping by providing damping ratios per mode (or one ratio for all modes). If λ_i denotes the ith eigenvalue and ξ_i the associated damping ratio, then

$$2\xi_i|\mathrm{Im}(\lambda_i)||\mathrm{Re}((E_m)_{ii})|$$

is added to the ith diagonal entry of the reduced damping matrix in Equation 20-9. If E and K are real and symmetric positive definite, $D = 0$, and E_m and K_m are diagonal, then ξ_i can be interpreted as the fraction of critical damping in the ith mode.

Time Dependent, Modal Study

The Modal Solver (using a Time Dependent, Modal study step) can export matrices and the right-hand side for use in further simulations.

For time-dependent studies, the load L is assumed to be of the form $l(t)L_0$, where L_0 is constant, and $l(t)$ is the given load factor. Further, the projection matrix Φ is possibly appended with one or two columns such that the initial values $u(0) = u_0$ and $\dot{u}(0) = u_1$ lie in the range of Φ.

If inhomogeneous Dirichlet boundary conditions are present, then Equation 20-7 is rewritten as

$$E\ddot{y} + D\dot{y} + Ky = l(t)L_0 - Ku_d,$$

so that $y = u - u_d$ is zero on the boundary.

The following reduced matrices can be exported: the *mass matrix* E_m, the *damping matrix* D_m, the *stiffness matrix* K_m, and the *damping ratio matrix*

$$\mathrm{diag}(2\xi_i|\mathrm{Im}(\lambda_i)|\mathrm{Re}((E_m)_{ii})) \oplus \mathbf{0}_{p\times p}$$

where $p = 0$, 1, or 2 is the number of columns that were appended to Φ (that is, the damping ratios do not affect the p last diagonal entries). Furthermore, the *load vector*, $\Phi^H L_0$; the *stiffness matrix times* u_d, $\Phi^H K u_d$; the *projection matrix*, Φ; the *initial value vector*, $q(0)$; and the *initial derivative vector*, $\dot{q}(0)$, can be exported.

Frequency Response

For a frequency response study, the load L is assumed to be of the type

$$L(\omega, t) = l(\omega)\tilde{L}(\omega)e^{i\omega t}, \tag{20-10}$$

where ω is the angular frequency of the forcing function and $l(\omega)$ is the given load factor.

The steady-state solution of Equation 20-7 is then of the form

$$q(t) = ce^{i\omega t} \tag{20-11}$$

Use the expression of L from Equation 20-10 and the expression of q from Equation 20-11 in Equation 20-9. Since the coefficient matrices can depend on the frequency, expand around the first frequency $f_0 = \omega_0/(2\pi)$, and truncate after three terms. You then get

$$\left[\left(\frac{\omega-\omega_0}{2\pi}\right)^2\tilde{E}_m - \left(\frac{\omega-\omega_0}{2\pi}\right)\tilde{D}_m + \tilde{K}_m\right]c = l(\omega)\Phi^H\tilde{L}(\omega) \tag{20-12}$$

An approximate solution to the original problem is given by $u_m = \Phi q$, but as usual only the time-independent factor Φc is returned. If damping ratios are provided, the term

$$\frac{\omega}{2\pi}D_{\mathrm{ratio}} = i\omega \cdot \mathrm{diag}\left(2\xi_i|\mathrm{Im}(\lambda_i)|\frac{|\mathrm{Re}((\tilde{E}_m)_{ii})|}{(2\pi)^2}\right)$$

is added to the sum inside the square bracket of Equation 20-12. Notice that when the coefficient matrices are independent of the frequency, this damping term coincides with what is added in the corresponding Time Dependent, Modal study.

The only type of parameter-dependent Dirichlet boundary conditions that are supported are those that can be written as a scalar frequency-dependent function times a constant vector (that is, the constraint vector M can be written as $M = l(\omega)M_0$). For inhomogeneous Dirichlet boundary conditions, a particular solution is needed. To homogenize the original problem, a particular solution $u_p = v_p e^{i\omega t}$ is computed from the nonreduced equation

$$\begin{cases} \tilde{K}v_p = 0 \\ Nv_p = l(\omega)M_0 \end{cases} \tag{20-13}$$

The term

$$\Phi^H\left(\left(\frac{\omega-\omega_0}{2\pi}\right)^2 \tilde{E}v_p - \left(\frac{\omega-\omega_0}{2\pi}\right)\tilde{D}v_p\right)$$

is then subtracted from the right side of Equation 20-12. Here, $\tilde{E}$, $\tilde{D}$, and $\tilde{K}$ are the unreduced coefficient matrices from the above expansion around the first frequency. Once an approximate solution, u_h, of the homogeneous problem has been found using modal analysis, an approximate solution of the inhomogeneous problem is given by $u_h + u_p$.

For frequency response studies, the following reduced matrices can be exported: the *mass matrix*, $\tilde{E}_m$; the *damping matrix*, D_m; and the *stiffness matrix* K_m. The *damping ratio matrix*, D_{ratio}; the *projection matrix*, Φ; the *mass matrix times the particular solution*, $\Phi^H\tilde{E}v_p$; the *damping matrix times the particular solution*, $\Phi^H\tilde{D}v_p$; and the *load vector* $\Phi^H\tilde{L}(\omega)$ can also be exported. The exported load vector is assembled for the last given frequency ω. You can also export all load vectors (that is, $\Phi^H\tilde{L}(\omega_0)$, $\Phi^H\tilde{L}(\omega_1)$, …, $\Phi^H\tilde{L}(\omega_k)$). This results in a matrix whose columns are all assembled load vectors. If $\tilde{L}$ is independent of ω, this matrix only contains one column.

	To export the matrices, in the **Modal Solver** node's **Settings** window, expand the **Output** section and then select the **Solution** or **Reduced matrices** check boxes to display check boxes for the various reduced matrices and vectors. Select the check boxes for the matrices and vectors that you want to export.

	Modal in the *COMSOL Multiphysics Programming Reference Manual*.

The Time Explicit Solver Algorithms

The Time Explicit Solver Runge-Kutta and Adams-Bashforth methods are discussed in this section. For the nodal discontinuous Galerkin method, it is natural and most efficient to use an explicit time-stepping method. Other situations when it can be advantageous is when using only particle tracing or wave problems together with so-called mass lumping.

	TimeExplicit in the *COMSOL Multiphysics Programming Reference Manual*.

RUNGE-KUTTA METHODS

Explicit classical Runge-Kutta methods of order 1–4 are supported. Runge-Kutta 4 is the default choice for the discontinuous Galerkin method.

ADAMS-BASHFORTH METHODS

The third-order Adams-Bashforth multistep method (AB3) for $u_t = R(u)$ is

$$u_{n+1} = u_n + \frac{k}{12}(23R(u_n) - 16R(u_{n-1}) + 5R(u_{n-2}))$$

where u_n is the solution at time t_n, and k is the time step.

The time restriction for the discontinuous Galerkin method for wave problems is directly proportional to the smallest mesh element size.

About the Wave Form PDE Interface

About Auxiliary Equation-Based Nodes is tailored toward explicit time stepping. The method is quadrature free as well as matrix free. Only element local matrices are formed. A suitable stable time step can be determined automatically by specifying the variable `wahw.wtc`, which should be an estimate of the maximum wave speed for the equations in the interface. The Time Explicit algorithm then translates this speed to a local so-called cell time scale. For a global time marching method like Runge-Kutta or Adams-Bashforth 3, the time step is directly related to the smallest cell time scale. When there is a large difference in cell time scales, a global time marching method is not very efficient. For this reason, there is also a local time marching method, Adams-Bashforth 3 (local), which divides the cells into groups based on the cell time scale. The groups are then time marched with different time-step sizes, making this a more efficient method.

The AWE Solver Algorithm

Assume that you want to solve an equation of the form

$$A(k)x(k) = y(k)$$

where A is a square matrix, x is an unknown quantity, y is a known quantity, and k is a parameter. In general, the components of the equation depend on k. *Asymptotic waveform evaluation* (AWE) is a basic method based on Padé expansion or Taylor expansion that can be used to speed up the solution of such equations for varying k significantly.

The algorithm used for the AWE solver follows the description in Section 13.4 of Ref. 17. That presentation, in turn, closely follows the original papers (Ref. 18 and Ref. 19). The general form of problems that the AWE solver is intended for is

$$A(k)x(k) = y(k)$$

where the dependence on k can be nonlinear. A truncated Taylor expansion of $x(k)$ around some parameter value k_0 can be written as

$$x(k) = \sum_{n=0}^{Q} m_n (k - k_0)^n \tag{20-14}$$

The unknown coefficient vectors

$$m_n = \frac{x^{(n)}(k_0)}{n!}$$

are commonly denoted *moments* in the literature. By repeated differentiation with respect to k and evaluation at k_0, the moments can be expressed in terms of $A(k_0)$ (and derivatives thereof) and $y(k_0)$ (and derivatives thereof) as

$$m_0 = A^{-1}(k_0)y(k_0)$$

and

$$m_n = A^{-1}(k_0)\left[\frac{y^{(n)}(k_0)}{n!} - \sum_{i=1}^{n}\frac{A^{(i)}(k_0)m_{n-i}}{i!}\right]$$

where $n \geq 1$. Apparently, the linear system has to be solved for several right-hand sides. Furthermore, derivatives of $A(k)$ and $y(k)$ have to be computed. The moments also depend on the choice of k_0, and because expansions likely have to be performed around several points, quite a few solution steps might be needed. Once the moments are available, they can be used to represent each component, $x^l(k)$, of $x(k)$ in terms of a Padé approximation as

$$x^l(k) = \frac{\sum_{i=0}^{L} a_i^l (k^l - k_0^l)^i}{1 + \sum_{j=1}^{L} b_j^l (k^l - k_0^l)^j} \tag{20-15}$$

where L will be equal to 1, 2, or 3. If $L = 3$ and $Q = 6$, the b_j can, via manipulations of Equation 20-14 and Equation 20-15, be seen to be the solution to

$$\begin{bmatrix} m_L^l & m_{L-1}^l & m_{L-2}^l \\ m_{L+1}^l & m_L^l & m_{L-1}^l \\ m_{L+2}^l & m_{L+1}^l & m_L^l \end{bmatrix}\begin{bmatrix} b_1^l \\ b_2^l \\ b_3^l \end{bmatrix} = -\begin{bmatrix} m_{L+1}^l \\ m_{L+2}^l \\ m_{L+3}^l \end{bmatrix}$$

The a_i are then given by

$$a_i^l = \sum_{j=0}^{i} b_j^l m_{i-j}^l$$

Typically, you are interested in the parameter response of some quantity, $\sigma(f)$, in an interval, $[f_1, f_2]$. The following iterative approach achieves reasonable accuracy for the entire interval:

1. Let $f_{\min} = f_1$ and $f_{\max} = f_2$.
2. Compute expansions around $f_{\min}$ and $f_{\max}$. Denote the approximations of $\sigma(f)$ given by those expansions by $\sigma_1(f)$ and $\sigma_2(f)$, respectively.
3. Choose one or several points, f_k, in the interval and compute $\sigma_1(f_k)$ and $\sigma_2(f_k)$.
4. If $|\sigma_1(f_k) - \sigma_2(f_k)| < \varepsilon$ the iterations are done. Otherwise, bisect the original interval and repeat the process for both intervals.

AWE Solver

Use the **AWE Solver** ( ) to perform fast-frequency parameter sweeps using asymptotic waveform evaluation (AWE). If, for a Frequency Domain study, the **Use asymptotic waveform evaluation** check box is selected under **Study Extensions**, or for a Adaptive Frequency Sweep study, this solver is used. It is an alternative way to perform parameter

stepping to the one you get by using the Stationary Solver node in conjunction with the Parametric attribute subnode.

	AWE in the *COMSOL Multiphysics Programming Reference Manual*.

GENERAL

Use the **Parameter name** field to specify a parameter name. The use of several parameter names is not supported.

Use the **Parameter values** field to enter a vector of parameter values that define the parameter value span for the simulation. Exactly how the vector of parameter values is used by the solver is determined by the option **Parameters to store** in the **Output** section as described below.

Use the **Asymptotic Waveform Evaluation (AWE) Expressions** table to specify a space-separated list of globally available scalar-valued expressions to be used for error estimation by the AWE algorithm.

TOLERANCES

In the AWE algorithm, the values of the expressions specified in the **Asymptotic Waveform Evaluation (AWE) Expressions** table in the **General** section are evaluated at one or more points of a parameter interval using certain expansions. The AWE algorithm is considered to have converged in that interval if the functional values resulting from the different expansions and evaluation points are similar enough. Use the:

- **Relative tolerance** field to specify to what relative tolerance the functional values must agree at the evaluation points.
- **Absolute tolerance** field to specify to what absolute tolerance the functional values must agree at the evaluation points.

EXPANSION SETTINGS

Use the **Evaluation points** field to specify a scalar or vector of values where the expressions defined by the **Asymptotic Waveform Evaluation (AWE) Expressions** table in the **General** section are to be evaluated. The evaluation points must be specified as a number between 0 and 1 because they are interpreted as being relative to the parameter interval under consideration. Entering a scalar value of 0.5 means that the expressions are evaluated at the midpoint of each interval. Use the:

- **Expansion size** list to specify the number of terms to include when performing Taylor expansions of the solution.
- **Expansion type** list to specify which expansion type to use when evaluating the solution at the different evaluation points:
  - Select **Padé** to compute a Padé expansion based on the Taylor expansion. The Padé expansion is then used when evaluating the solution.
  - Select **Taylor** to use the Taylor expansion itself when evaluating the solution.

VALUES OF LINEARIZATION POINT

The problem solved by the AWE solver is assumed to be a linearization about a solution. You can specify such a solution (a linearization point) using the **Prescribed by** list. Select:

- **Initial expression** to use the expressions specified on the **Initial Values** nodes under a specific physics interface as a linearization point.
- **Solution** to use a solution as a linearization point.

Use the **Solution** list to specify which solution to use if **Prescribed by** has been set to **Solution**. Select:

- **Zero** to use a linearization point that is identically equal to zero.
- Any other available solution to use it as a linearization point. It can be the current solution in the sequence, or a solution from another sequence, or a solution that was stored with the Solution Store node. You select a stored solution by changing **Use** to the name of the stored solution.

To store the used linearization point in the output, select the **Store linearization point and deviation in output** check box.

OUTPUT

Use the **Parameters to store** list to control at what parameter values the solver stores a solution. Select:

- **Steps given** to store solutions at the parameter values entered in the **Parameter values** field in the **General** section.
- **Steps taken by solver** to store solutions at the parameter values where the AWE algorithm has performed an expansion.

If you are computing a reduced-order model, you can select the **Reduced model** check box to output a reduced model to a new or existing **Reduced Models** node that you select from the **Reduced model** list. If you want to use reconstruction of the original model from the reduced model, select the **Enable reconstruction capability** check box.

ADVANCED

By default the solver allows shorter intervals in the AWE algorithm than the relative tolerance (from the **Relative tolerance** field in the **Tolerances** section) times the length of the interval defined by the values in the **Parameter values** field in the **General section**. But if shorter intervals are detected, these intervals are not bisected and a warning is printed in the log. To modify the shortest allowed interval, select the **Minimal interval** check box and enter a limit for the interval length.

The **Accept short intervals** check box can be used to control how the solver handles intervals that are found to be too short. If this check box is cleared, the solver stops with an error if the interval found is too short. If you select the check box, the solver silently accepts short intervals.

Use the **Assembly strategy** list to control how the solver assembles quantities needed to compute a Taylor expansion. Select:

- **All** to assemble all quantities at once. This option is faster than **One**.
- **One** to assemble one quantity at a time. This option requires less memory than **All**.

CONSTANTS

In this section you can define constants that can be used as temporary constants in the solver. You can use the constants in the model or to define values for internal solver parameters. These constants overrule any previous definition (for example, from Global Definitions). Some examples of when it can be useful to define constants for a solver:

- When doing more advanced solver sequences, where constants need to be changed in between calls (for example, in for-loops).
- When you do not want to change the global definition of a parameter or when you cannot or do not want to use a Parametric Solver feature.
- When you want to define auxiliary parameters that are part of the equations like `CFLCMP` or `niterCMP` and where the solver does not define these parameters.

Click the **Add** button (+) to add a constant and then define its name in the **Constant name** column and its value (a numerical value or parameter expression) in the **Constant value** column. By default, any defined parameters are

first added as the constant names, but you can change the names to define other constants. Click **Delete** ( ) to remove the selected constant from the list.

LOG

This section, which is initially empty, contains a log from the time stepping. Select the **Keep warnings in stored log** check box as needed.

Dependent Variables

The **Dependent Variables** node ( ) handles initial data and scaling for the dependent variables that you solve for as well as how to compute dependent variables not solved for. The methods are applicable to the dependent variables present as Field subnodes ( ) under the Dependent Variables node. The Field node name matches the name of the variable.

	The **Dependent Variables** node automatically updates the **Field** nodes. So, if the study type for the solver changes or if you use a different study type, then the **Field** nodes change accordingly. Also see Scaling of Variables and Equations for information.

To plot and evaluate the initial values for the dependent variables, right-click the **Dependent Variables** node and choose **Compute to Selected** ( ) or click the button on the toolbar (this is similar to the **Get Initial Value** option for the main Study nodes).

The **Settings** window has the following sections:

GENERAL

Use the **Defined by study step** list to specify if the settings are synchronized with the corresponding study step. Select **User defined** to specify all settings locally in the **Dependent Variable** node's **Settings** window. This setting relates to the Field node's setting to **Solve for this field**.

INITIAL VALUES OF VARIABLES SOLVED FOR

This section is only available if you select **User defined** from the **Defined by study step** list.

Use the **Method** list to specify how to compute initial values for the dependent variables that you solve for. Select:

- **Initial expression** (the default) to use the expressions specified on the **Initial Values** nodes for the physics interfaces in the model.
- **Solution** to use initial values as specified by a solution object. Use the **Solution** list to specify what solution object to use (directly or as part of the initial expression). Select:
  - **Zero** to initialize all variables to zero.
  - Any available solution object to use it as initial value.

Solution List Options by Study Type

Depending on the study type for the selected solution object, you can choose different solutions from a list underneath the **Solution** list:

- For a Stationary study, from the **Selection** list, select **Automatic** (the default) to use the last (typically the only) solution, select **First** to use the first (typically the only) solution, select **Last** to use the last (typically the only) solution, select **All** to use all (typically just one) solutions from that study, select **Manual** to use a specific solution number that you specify, or select **1** to use the first (typically the only) solution. If you use a parametric continuation of the stationary study, there can be additional solutions to choose from.

- For a Time Dependent study, from the **Time** list, select **Automatic** (the default) to use the solution for the last time, select **First** to use the first solution, select **Last** to use the last solution, select **All** to use all solutions from that study, select **Interpolated** to specify a time in the text field that opens and use the interpolated solution at that time, select **Manual** to use a specific solution number that you specify, or select one of the output times to use the solution at that time.
- For an Eigenvalue study, from the **Selection** list, select **Automatic** (the default) to use the first eigenvalue and its associated eigensolution, select **First** to use the first solution, select **Last** to use the last solution, select **All** to use all solutions from that study, select **Manual** to use a specific solution number that you specify, or select one of the eigenvalues to use the corresponding eigensolution.
- For a Parametric Sweep or Frequency Domain study, from the **Parameter value** list, select **Automatic** (the default) to use the first parameter value set or frequency, select **First** to use the first solution, select **Last** to use the last solution, select **All** to use all solutions from that study, select **Manual** to use a specific solution number that you specify, or select one of the parameter value sets or frequencies to use the corresponding solution.

SCALING

Use the **Method** list to specify how to scale the variables solved for. Select:

- **Automatic** to get an automatically determined scaling (the default), which works well for most models. It is initially based on the magnitudes of the elements in the Jacobian and mass matrices. For nonlinear problems these scales are recomputed based on the magnitude of the solution iterate.
- **Initial value based** to get a scaling that is determined from the initial values. Use this if the components of the initial values give a good estimate of the order of magnitude of the solution.
- **Manual** to manually enter a scaling if you know the order of magnitudes of the variables in advance. For instance, suppose that a model solves for a dependent variable `u`, and that the values of `u` are on the order of 10^{-4}. To use this knowledge, type `1e-4` in the **Scale** field. The solvers then internally use a solution vector rescaled to the order of 1 for `u`. If there is more than one dependent variable that the model solves, they are all rescaled with the same factor.
- **None** to skip scaling.

	The automatic scaling in COMSOL Multiphysics does not work when using the nonlinear stationary solver and a field or state has an identically zero solution (the solver does not converge). In this case use **Manual** or **None**.

The scaling method also can be specified for each dependent variable in the **Settings** window for the variable's **Field** node. For more information about scaling, see Scaling of Variables and Equations.

RESIDUAL SCALING

From the **Method** list choose **Automatic** (the default) or **Manual**. For Manual, enter a scale factor in the **Scale** field (default: 1). For the scaling, see Termination Criterion for the Fully Coupled and Segregated Attribute Nodes. A manual tuning of the scale factor may help convergence in some cases where the solution does not converge when using automatic scaling does not work (this could be the case for some contact problems, for example).

	The **Automatic** option is not applicable to time-dependent problems.

VALUES OF VARIABLES NOT SOLVED FOR

This section is only available if you select **User defined** from the **Defined by study step** list.

These settings are only applicable if there are dependent variables in the model that you do not solve for (in the case, for example, when solving a multiphysics model using a sequential approach). Then use the **Method** list to specify how to compute the values of variables not solved for. Select:

- **Initial expression** to use the expressions specified on the **Initial Values** nodes for the physics interfaces in the model.
- **Solution** to use initial values as specified by a solution object. Use the **Solution** list to specify what solution object to use if **Method** has been set to **Solution**. Select:
  - **Zero** to initialize all variables to zero.
  - Any other available solution object to use it as initial value.

Depending on the solution object to use, you can choose different solutions to use. If a solution has nodes for storing solutions in its sequence, you can choose which solution to use using the **Use** list. The **Current** value is the value that the solution has at the moment the value is read. The other values are the values stored in the respective nodes of the sequence.

	See Solution List Options by Study Type for additional choices based on study type and then available in this section.

You select whether to solve for a variable or not by left-clicking a **Field** subnode ( ) and then select or clear the **Solve for this field** check box in the **Settings** window.

INITIAL VALUE CALCULATION CONSTANTS

The settings in this section makes it possible to control values of parameters in models when used as constants in initial values. By default, those values are controlled automatically by the study step, and the settings are not available unless you choose **User defined** from the **Defined by study step** list in the **General** section above. The value is updated as soon as a subsequent solver gets its times, frequencies, or parameter lists updated. The value for each parameter is the first value in each list. You can override this automatic behavior by choosing **Manual** from the **Parameters** list. You can then add parameters as constants to the **Constant name** column and the corresponding initial value as a parameter expression in the **Initial value source** column. The constants defined here must be used in an initial value expression for the dependent variables.

Eigenvalue Solver

Use the **Eigenvalue Solver** ( ) to find the solution to linear or linearized eigenvalue problems (also called eigenfrequency problems). This solver is automatically used when a Eigenvalue or Eigenfrequency study is added to the model.

Also see The Eigenvalue Solver Algorithm.

GENERAL

Use the **Defined by study step** list to specify if the settings are synchronized with the corresponding study step. Select **User defined** to specify the properties below (in addition to the relative tolerance, which is always available).

Use the **Desired number of eigenvalues** field to specify the number of eigenvalues and eigenvectors (default: 6) that the solver should compute and store in the output.

The number in the **Relative tolerance** field (default $1.0*10^{-6}$) controls the relative error in the computed eigenvalues.

Use the **Search for eigenvalues around** field to search for eigenvalues close to the specified real or complex scalar. This value is often called the shift. Select the **Enter transformed value** check box to enter the value to search around as the transformed value (an eigenfrequency, for example) instead of the corresponding eigenvalue.

From the **Eigenvalue transformation** list, select a transformation method for transforming the eigenvalues into another related quantity. The default is **None**, which keeps the original eigenvalues. Depending on the physics in the model, other transformations might also be available.

For other settings, see the Eigenvalue or Eigenfrequency study settings. When the eigenvalue search settings are defined by the study step, these settings, including the ones above except the **Relative tolerance**, are not available.

VALUES OF LINEARIZATION POINT

Both for linear and nonlinear PDE problems, the eigenvalue problem is that of the linearization about a solution. Such a solution is specified with the **Prescribed by** list. Select:

- **Initial expression** (the default) to use the expressions specified on the **Initial Values** nodes under a specific physics interface as a linearization point.
- **Solution** to use a solution as linearization point.

Use the **Solution** list to specify which solution to use if **Prescribed by** is set to **Solution**:

- Select **Zero** (the default) to use a linearization point that is identically equal to zero.
- Select any other available solution to use it as linearization point.

Select the **Store linearization point and deviation in output** check box to store the linearization point and the deviation from that linearization instead of the total solution.

If the eigenvalue itself appears nonlinearly, the solver reduces the problem to a quadratic approximation around an eigenvalue linearization point. Use the settings under **Value of eigenvalue linearization point** to specify such a scalar. Select the **Transform point** check box to transform the linearization point value using the selected eigenvalue transformation. Specify the value of the linearization point in the **Point** field (default value: 0).

OUTPUT

Select an option from the **Scaling of eigenvectors** list to specify the scaling method used to normalize the eigenvectors. Select:

- **RMS** to use root mean square normalization. This RMS scaling of the eigenvector u is such that $\|u\|_2 = \sqrt{\text{u.size()}}$.
- **Maximum** to use maximum norm normalization. The degree of freedom with the largest absolute value will be assigned the value specified in the **Maximum absolute value** field (default: 1), so that $\|u\|_\infty = \text{absmax}$. You can change the maximum absolute value to, for example, keep the eigenmodes small in value. The physics interfaces for structural mechanics set this value to a small number during the solver generation.
- **Mass matrix** to scale the eigenvectors such that the modal masses become unity.

ADVANCED

The eigenvalue solver is an iterative algorithm. Use the **Maximum number of eigenvalue iterations** field to limit the number of iterations (default: 300).

Use the **Dimension of Krylov space** field to control the algorithm's memory use. The default value of 0 means that the solver sets the dimension automatically to approximately twice the number specified in the **Desired number of eigenvalues** field in the **General** section.

CONSTANTS

In this section you can define constants that can be used as temporary constants in the solver. You can use the constants in the model or to define values for internal solver parameters. These constants overrule any previous

definition (for example, from Global Definitions). Some examples of when it can be useful to define constants for a solver:

- When doing more advanced solver sequences, where constants need to be changed in between calls (for example, in for-loops).
- When you do not want to change the global definition of a parameter or when you cannot or do not want to use a Parametric Solver feature.
- When you want to define auxiliary parameters that are part of the equations like `CFLCMP` or `niterCMP` and where the solver does not define these parameters.

Click the **Add** button (+) to add a constant and then define its name in the **Constant name** column and its value (a numerical value or parameter expression) in the **Constant value** column. By default, any defined parameters are first added as the constant names, but you can change the names to define other constants. Click **Delete** ( ) to remove the selected constant from the list.

LOG

The **Log** section contains logs of the eigenvalue solver results and properties of the assembled system, including the solver iterations and the total solution time. This log is stored in the Model MPH-file.

	Conical Quantum Dot: Application Library path **COMSOL_Multiphysics/Equation_Based/conical_quantum_dot**

FFT Solver

The **FFT Solver** ( ) performs a discrete Fourier transformation for time-dependent or frequency-dependent input solutions using FFT (fast Fourier transform). You can add the FFT solver to Time Dependent and Frequency Domain studies. The FFT solver supports both forward FFT from the time domain to the frequency domain and inverse NFT (nonuniform Fourier transform) or inverse FFT from the frequency domain to the time domain. The input solution has to be of a Time Dependent type for a forward FFT or of a Parametric type for an inverse NFT (INFT) or inverse FFT (IFFT). The input solution can have real-valued or complex-valued data. COMSOL Multiphysics uses the FFT library in Intel's MKL for the FFT transformations in the FFT solver.

You can visualize the results of an FFT or INFT/IFFT like any other solution, and it can be postprocessed in the same way. The output is typically a complex-valued quantity. Use `abs(u)` to plot the absolute value, or use `real(u)` and `imag(u)` to plot the real and imaginary parts, respectively.

Forward FFT

For the forward FFT (the time-dependent case), a time-dependent solution is transformed from times $\{t_0,\ldots,t_{N-1}\}$ to frequencies $\{f_0, \ldots, f_{N-1}\}$ in the frequency domain.

Inverse NFT/Inverse FFT

For the inverse NFT or inverse FFT (the frequency domain case), a frequency-dependent solution is transformed from frequencies $\{f_0, \ldots, f_{N-1}\}$ to times $\{t_0, \ldots, t_{K-1}\}$ in the time domain. The FFT algorithm is used for the inverse

transformation if the input frequency list and the output time list are equidistant and the output time range given matches the input data. Otherwise, the NFT algorithm is used.

	If you have the Structural Mechanics Module, see one of these example using the FFT solver: • *Vibration Analysis of a Deep Beam*: Application Library path **Structural_Mechanics_Module/Verification_Examples/vibrating_deep_beam** • *Viscoelastic Structural Damper*: Application Library path **Structural_Mechanics_Module/Dynamics_and_Vibration/viscoelastic_damper_frequency**

GENERAL

From the **Defined by study step** list, select a corresponding **Frequency to Time FFT** or **Time to Frequency FFT** study step (the default if such a study step created the **FFT Solver** node; the FFT solver settings are then controlled from the study step), or select **User defined** to define the corresponding settings in the FFT solver (see below).

From the **Transformation** list, choose **Forward** for a forward FFT from the time domain to the frequency domain or **Inverse** for an inverse NFT/FFT from the frequency domain to the time domain. If a study step controls the FFT solver, the transformation setting is determined from that study step.

From the **Prescribed by** list, choose **Solution** (the default) to use a solution as the input to the study, or choose **Initial expression** to use an expression for the initial values to couple a field to another field. The mapping then occurs before the FFT.

From the **Solution** list you can select any applicable solution, including solutions from other studies. You can also select **Current**, which uses the current solution. Depending on the type of solution selected, a **Use** list may appear where you can choose **Automatic**, to use the current solution or, if the allowed values are not set correctly, a Solution Store node, or a specified stored solution (**Solution Store 1**, for example).

For scaling of the solution, from the **Scaling** list choose **Discrete Fourier transform** (the default) for discrete scaling (unscaled) or **Continuous Fourier transform** for continuous scaling (scaled by time or frequency step).

Window Function

You can apply a window function for the input data by selecting the **Use window function** check box. A window function can be useful to restrict the input data. The following options are available from the **Window function** list:

- Choose **From expression** (the default) to use a real or complex user-defined **Expression**. Every input value is multiplied by this expression. The expression can be parameterized using the following parameters:
  - `t`: the time t_k in the forward FFT case.
  - `freq`: the frequency f_k in the inverse FFT case.
  - `niterFFTin`, which corresponds to the index j in the forward and inverse FFT cases.
  - `nFFTin`: the number of input samples for the forward and inverse FFT cases (that is, $0 \le$ `niterFFTin` $<$ `nFFTin`).
  - `tperiodFFT`: the period in time for the forward FFT case; that is, `t` in $\{t_0,\ldots, t_{N-1}\}$ with `tperiodFFT` equal to $t_N–t_0$.
  - `freqmaxFFT`: the frequency range for the inverse FFT case; that is, `freq` in $\{f_0, \ldots, f_{N-1}\}$ with `freqmaxFFT` equal to $f_{N-1}–f_0$.
- Choose **Cutoff** to specify a window using a **Cutoff fraction** c in the interval from 0 to 1. The input values are then set to $u(t_j) = 0$ or $\omega(f_j) = 0$ for $j \ge cN$. This window function provides a sharp cutoff, which might be useful in the time domain where you know that your solution has a zero or very small amplitude at the end.
- Choose **Rectangular** to use a rectangular (boxcar) window, which cuts off all input data outside of the start and end values in the **Window start** and **Window end** fields.

- Choose **Gaussian** to use a Gaussian window defined by a **Window center** value and a **Standard deviation**.
- Choose **Hamming** to use a Hamming window defined by a **Window start** value and a **Window end** value.
- Choose **Hanning** to use a Hanning (Hann) window defined by a **Window start** value and a **Window end** value.
- Choose **Blackman** to use a Blackman window defined by a **Window start** value and a **Window end** value.
- Choose **Tukey** to use a Tukey window (tapered cosine window) defined by a **Window start** value and a **Window end** value. In addition, there is a tuning window parameter α, which you define in the **Window parameter** field (default value: 0.5). If the window parameter is set to 0, the Tukey window becomes a rectangular window; if set to 1, it becomes a Hanning (Hann) window.

For general information about window functions, see Ref. 20.

In the case of a forward FFT, for all window types except the one defined from a user-defined expression and the cutoff window, you can also specify a time unit (default: s) in the **Time unit** list provided for the **Start time** and **End time** fields or the **Window center** fields.

In the case of an inverse FFT, for all window types except the one defined from a user-defined expression and the cutoff window, you can also specify a unit (default: Hz) in the **Frequency unit** list.

Additional Settings for the Forward FFT

From the **Input** list, choose what type of input to use for the forward FFT:

- **Solution**, for the solution u itself.
- **First time derivative**, for the first time derivative of the solution, u_t.
- **First time derivative**, for the second time derivative of the solution, u_{tt}.

	The time derivatives used as input data might be zero, if they are not computed. There is no warning issued by the FFT solver in this case.

From the **Time unit** list, choose a time unit (default: s) to use for the times in the transformation. Specify the input time range ($[t_{\text{start}}, t_{\text{end}}]$) for the forward FFT in the **Start time** (t_{start}) and **End time** (t_{end}) fields. The number of interpolated input solutions, N, is derived from the specified maximum output frequency and appears in the solver log. Specify the maximum output frequency $f_{\max}$ using the **Frequency unit** list (default: Hz) and the **Maximum output frequency** field.

The input solution is padded with zeros (for $t_{\text{start}}<t_0$ and $t_{\text{end}}>t_N$), if the start time or end time for the FFT exceeds the time range $[t_0, t_N]$ of the time-dependent input solution. Window functions are applied to the original data (that is, the window function is applied first, then the zero padding is added).

	The FFT solver adds a warning when zero padding is applied and provides the number of zero solutions added in the log. In addition, there is a warning when the values at the boundaries t_0 and t_N are not zero. In such cases, apply an appropriate window function.

The **Periodic input data** check box is selected by default. The FFT solver then assumes that $u(t_{\text{end}}) = u(t_{\text{start}})$ and performs the FFT on the values $\{u(t_0),\ldots, u(t_{N-1})\}$ for the equidistant times $t_0 = t_{\text{start}},\ldots, t_{N-1}$, where $t_N = t_{\text{end}}$; that is, the period T is $t_{\text{end}} - t_{\text{start}}$. The outputs are $\{\omega(f_0), \ldots, \omega(f_{N-1})\}$. The frequencies are computed by $f_k = k/T$ for $k = 0, \ldots, N-1$. If you clear the **Periodic input data** check box, the FFT solver performs the FFT for the values $\{u(t_0),\ldots, u(t_{N-1})\}$ for the equidistant times $t_0 = t_{\text{start}},\ldots,t_{N-1} = t_{\text{end}}$; that is, the period T is $(N/(N-1))\cdot(t_{\text{end}} - t_{\text{start}})$. The outputs are $\{\omega(f_0), \ldots, \omega(f_{N-1})\}$. The frequencies are computed by $f_k = k/T$ for $k = 0, \ldots, N-1$. Note that the period T is different compared to the previous case. The time-dependent input solution is interpolated at the times $t_0\ldots, t_{N-1}$. See the description below for information about how N is determined.

From the **Store output frequencies** list, choose **No negative frequencies for real input** (the default) or **All frequencies**. If you choose **No negative frequencies for real input**, the number of input samples N is defined by $N = 2M + 1$, with M = `floor`$((t_{\text{end}}-t_{\text{start}})\cdot f_{\max})$. If you choose **All frequencies**, N is defined by $N = M + 1$. In the first case, real input data is assumed and instead of $\omega(f_0), \ldots, \omega(f_{2M})$ only $\omega(f_0),\ldots, \omega(f_M)$) are stored. This is not a loss of information due to $\omega(f_k) = \omega(f_{k+N}) = \overline{\omega}(f_{N-k}) = \overline{\omega}(f_{-k})$ (a warning is given if the input data is not real).

If you have chosen **All frequencies** from the **Store output frequencies** list, then from the **Output order** list, you can select **Natural** or **Symmetric** (the default):

- If you choose **Natural**, the output solutions correspond to nonnegative frequency values and are ordered corresponding to $\omega(f_0),\ldots, \omega(f_{N-1})$ or $\omega(f_0),\ldots, \omega(f_M)$ if the **Do not store negative frequencies for real input** check box is selected.
- If you choose **Symmetric** the output solutions are determined for positive and negative frequencies. It results in the following output order, if the **Do not store negative frequencies for real input** check box is cleared:
  - $\omega(f_{-n}), \omega(f_{-(n-1)}), \ldots, \omega(f_{-1}), \omega(f_0), \omega(f_1), \ldots, \omega(f_{n-1}), \omega(f_n)$ for $N = 2n+1$.
  - $\omega(f_{-n}), \omega(f_{-(n-1)}), \ldots, \omega(f_{-1}), \omega(f_0), \omega(f_1), \ldots, \omega(f_{n-2}), \omega(f_{n-1})$ for $N = 2n$.

The forward FFT is computed using the following unscaled formula:

$$\omega(f_k) = \sum_{j=0}^{N-1} u(t_j)\mathrm{e}^{\frac{-2\pi ijk}{N}}$$

for $k = 0, \ldots, N-1$.

Additional Settings for the Inverse NFT/FFT

Solutions in the frequency domain are not interpolated. The input values do not have to be equidistant and they do not have to be sorted with respect to the frequencies. The input data (for nonnegative or nonpositive given frequencies) is by default extended by negative frequencies or positive frequencies with complex-conjugated input values. You can switch this behavior on and off using the **Extend input samples** list. Choose **Add complex conjugate pairs** (the default) or **Use original data**. The first option allows creation of real output data from complex-valued input data by basically recreating data thrown away by the **Do not store negative frequencies for real input** option for the forward FFT.

From the **Frequencies** list, select **All** (the default) or **Select from interval**:

- For the input selection **All**, the inverse NFT/FFT transforms all available input solutions.
- For the input selection **Select from interval**, you define the interval of frequencies using the **Lower bound** and **Upper bound** fields that appear. Choose the frequency unit from the **Frequency unit** list (default: Hz).

Choose the time unit from the **Time unit** list (default: s). Enter the output time range for the inverse NFT/FFT in the **Times** field. These times correspond to the set of time values selected from the **Times to store** list. The default is **Time steps taken by solver**. If you want to use another set of times (perhaps to reduce the size of the output data), select **From list** and enter the time steps in the **Output times** field. The output data is then interpolated to these output times. Click the **Range** button ( ) to define a range of output time values using the **Range** dialog box. The number of output solutions can be different from the number of input solutions.

The **Periodic input data** check box is only available if you have selected **Use original data** from the **Extend input samples** list. The value for the highest frequency is not considered in the inverse transformation, if the **Periodic input data** check box is selected.

The *inverse FFT* is computed for input data $\omega(f_0), \ldots, \omega(f_{N-1})$ using the following formula:

$$u(t_k) = \phi_k \sum_{j=0}^{N-1} \omega(f_j) e^{\frac{2\pi ijk}{N}}$$

for $k = 0, \ldots, N-1$. The correction factor ϕ_k is defined as

$$\phi_k = \phi_k(f_0) = e^{\frac{2\pi ikf_0}{F}},$$

where $F = f_N - f_0$, and you can interpret it as a shift of the input values for $f_0 \neq 0$ by means of the following formula:

$$\sum_{j=0}^{N-1} \omega(f_{j+L}) e^{\frac{2\pi ijk}{N}} = e^{\frac{-2\pi ikL}{N}} \sum_{j=0}^{N-1} \omega(f_j) e^{\frac{2\pi ijk}{N}}$$

with $\omega(f_{j+N}) = \omega(f_j)$ for $j = 0, \ldots, N-1$.

Performing an unscaled transformation (**Scaling** list set to **Discrete Fourier Transform**) means that a forward FFT times an inverse FFT results in the original input data multiplied by a factor of N. The original input is obtained if **Scaling** is set to **Continuous Fourier Transform**.

The FFT solver sorts the input data before applying the inverse FFT. For equidistant input frequencies and equidistant output, the fast transformation algorithm (FFT) is applied, if the number of input samples is equal to the number of output time values and if the given output time step (derived from the **Output times** list) correlates to the input frequency range.

The *inverse NFT* is computed using the following formula if **Use original data** is selected from the **Extend input samples** list:

$$u(t_k) = \sum_{j=0}^{N-1} \omega(f_j) e^{2\pi i f_j (t_k - t_0)}$$

for $k = 0, \ldots, K-1$ (K is given by the number of output times; that is, $t_0, \ldots, t_{K-1}$. If you have selected **Add complex conjugate pairs** from the **Extend input samples** list, then the formula

$$u(t_k) = \omega(f_0) + \frac{1}{2} \cdot \sum_{j=1}^{M} (\omega(f_j) e^{2\pi i f_j (t_k - t_0)} + \overline{\omega(f_j)} e^{-2\pi i f_j (t_k - t_0)})$$

for $k = 0, \ldots, K-1$ is used. The input frequencies $f_1, \ldots, f_M$ have to be all positive or all negative, and either $f_0 = 0$ is given as input frequency or $\omega(f_0) = 0$ is used.

Select the **Add stationary solution** check box to extend the input data for frequency 0 by a stationary solution that is either taken as the data for frequency 0 or added to the data for frequency 0. Select the method to retrieve the solution from the **Method** list: **Solution** (the default) to use the solution itself, or **Initial expression** to use the expression for the initial value. Choose any available and applicable solution from the **Solution** list, or choose **Zero** for no solution. Depending on the selected solution, additional settings appear for specifying which of the solutions to use and which parameter values, eigenfrequencies, or times to use. Use the **Time** list to select an input solution at a specific time or to interpolate.

ADVANCED

You can specify phase functions for input and output data. This functionality can be used for modifying the input and output data. Select the **Use phase function** check box to specify phase functions. The following options are

available from the **Phase function for input** and **Phase function for output** lists: **None** (the default, which provides no phase function) and **From expression**:

Select **From expression** to type an expression for the phase function in the **Expression** field. The expression e_{in} for the input data or e_{out} for the output data can be real-valued or complex-valued. In the forward case, each input value $u(t_k)$ is then multiplied by `exp`(ie_{in}), and similarly, each output value $\omega(f_k)$ is multiplied by `exp`(ie_{out}). In the inverse case, each input value $\omega(f_k)$ is multiplied by `exp`(ie_{in}), and similarly, each output value $u(t_k)$ is multiplied by `exp`(ie_{out}).

- For **Phase function for input**, the expression e_{in} can be parameterized using the following parameters:
  - `t`: the time t_k in the forward FFT case.
  - `freq`: the frequency f_k in the inverse FFT case.
  - `niterFFTin`, which corresponds to the index j for the input data in the forward and inverse FFT cases.
  - `nFFTin`: the number of input samples for the forward and inverse FFT cases.
  - `tperiodFFT`: the period in time for the forward FFT case; that is, `t` in $\{t_0,\ldots, t_{N-1}\}$ with `tperiodFFT` equal to $t_N–t_0$.
  - `freqmaxFFT`: the frequency range for the inverse FFT case; that is, `freq` in $\{f_0, \ldots, f_{N-1}\}$ with `freqmaxFFT` equal to $f_{N-1}–f_0$.
- For **Phase function for output**, the expression e_{out} can be parameterized using the following parameters:
  - `freq`: the frequency in the forward FFT case.
  - `t`: the time in the inverse FFT case.
  - `niterFFTout`, which corresponds to the index j for the output data in the forward and inverse FFT cases.
  - `nFFTout`: the number of output solutions for the forward and inverse FFT cases (that is, $0 \le$ `niterFFTout` $<$ `nFFTout`).
  - `tperiodFFT`: the period in time for the inverse FFT case; that is, `t` in $\{t_0,\ldots, t_{N-1}\}$ with `tperiodFFT` equal to $t_{N-1}–t_0$.
  - `freqmaxFFT`: the frequency range for the forward FFT case; that is, `freq` in $\{f_0, \ldots, f_{N-1}\}$ with `freqmaxFFT` equal to $f_{N-1}–f_0$.

OUTPUT

Select the **Store intermediate FFT data on disk** check box to store intermediate data on disk. The FFT solver then typically becomes slower (due to load and store operations) but uses less memory.

CONSTANTS

In this section you can define constants that can be used as temporary constants in the solver. You can use the constants in the model or to define values for internal solver parameters. These constants overrule any previous definition (for example, from Global Definitions). Some examples of when it can be useful to define constants for a solver:

- When doing more advanced solver sequences, where constants need to be changed in between calls (for example, in for-loops).
- When you do not want to change a global definition of a parameter or when you cannot or do not want to use a Parametric Solver feature.
- When you want to define auxiliary parameters that are part of the equations like `CFLCMP` or `niterCMP` and where the solver does not define these parameters.

Click the **Add** button (✚) to add a constant and then define its name in the **Constant name** column and its value (a numerical value or parameter expression) in the **Constant value** column. By default, any defined parameters are

first added as the constant names, but you can change the names to define other constants. Click **Delete** ( ) to remove the selected constant from the list.

LOG

Select the **Keep warnings in stored log** check box if you want the warnings to remain in the log for troubleshooting or other use.

Modal Solver

Use the **Modal Solver** ( ) to perform either parameter stepping (also called frequency response) or time stepping (also called transient response) using a reduced model. The model reduction uses precomputed eigenvalues and eigenvectors. This solver is automatically used when a Time Dependent, Modal or Frequency Domain, Modal study is added to the model.

Also see The Modal Solver Algorithm for more information.

GENERAL

Use the **Defined by study step** list to specify if the settings are synchronized with the corresponding study step, or select **User defined** to specify all settings locally.

Use the **Study type** list to select the basic study type. Select:

- **Frequency domain** to perform parameter stepping using a reduced model. Then continue defining the settings For Frequency Domain, Modal Studies.
- **Time dependent** to perform time stepping using a reduced model. Then continue defining the settings For Time Dependent, Modal Studies.

For Frequency Domain, Modal Studies

For a Frequency Domain, Modal study, use the **Parameter values** field to enter a vector of parameter values that define the parameter value span for the frequency-domain simulation. Click the **Range** button ( ) to define a range of parameter values using the **Range** dialog box.

Exactly how the vector of parameter values is used by the solver is determined by the option **Parameter list type**.

An alternative to specifying parameter values directly in the **Parameters values** field is to specify them in a text file. You can use the **Load parameter values** field and the **Browse** button to specify such a text file. Click the **Read File** button to read the specified file. The read values appear in the **Parameters values** field.

!	Reading parameter values from a file overwrites any values already present in that field. The format of the text files must be such that the parameter values appear one per row.

Use the **Parameter list type** list to control how to interpret the parameter values entered in the **Parameter values** field. Select:

- **Frequency** (the default setting) to use the parameter values without modification.
- **Fraction** to multiply the parameter values by the absolute value of the largest eigenvalue in the reduced model divided by two.
- **Spread** to treat the parameter values as an interval around each eigenvalue in the reduced model. That is, the absolute value of each eigenvalue is multiplied by the parameter values and the resulting parameter value vectors are concatenated into one.

Use the **Linearity** list to specify the type of linear behavior. Select:

- **Linear** to use a linear solver with the same linearization point for both residual and Jacobian computation, which corresponds to one step in Newton's method.
- **Linear perturbation** (the default setting) to use a linear solver that computes the Jacobian in the same way as the **Linear** option but uses a zero solution when computing the residual. It is useful for small-signal analysis and similar applications where the variations around a linearization point are of interest.

For Time Dependent, Modal Studies

For a Time Dependent, Modal study, select a **Time unit** from the list. Then use the **Times** field to enter a vector of times that define the time span for the simulation. Click the **Range** button ( ) to define time values. Output from a simulation includes the times given in this field and the corresponding solutions.

Tolerance

Use the **Relative tolerance** field to enter a positive number (default value: 0.01). Depending on the selection in the **Study type** list in the **General** section, the tolerance means one of the following:

- When a Frequency Domain, Modal study is selected, the **Relative tolerance** is used as a termination tolerance for iterative linear system solvers and for error checking (if enabled) for direct linear system solvers.
- When a Time Dependent, Modal study is selected, the **Relative tolerance** is used by the solver in each time step to control the relative error. The absolute tolerance settings below work in the same way as for the time-dependent solver, but internally the full length absolute tolerance vector is transferred to the modes by the same transformation (projection) as is used to transform the problem to reduced form (the eigenmodes).

Maximum Time Step

For the maximum time step, select an option from the **Maximum step constraint** list. By default, the solver chooses a maximum time step automatically. Select **Constant** as the maximum step constraint for manual specification of a fixed maximum time step in the **Maximum step** field. A constant maximum step constraint is a positive scalar value, which can be an expression that evaluates to a numerical value before entering the solver. The expression can include global parameters. Select **Expression** as the maximum step constraint for more general expressions of the allowed maximum time step. These expressions are evaluated while solving and can, for instance, depend on the time parameter itself.

	The solver uses the absolute value of the expression for the maximum step constraint.

EIGENPAIRS

Use the **Solution** list to specify a solver configuration to be used when constructing the reduced model.

	The **Use** list is available for solution sequences with additional stored solutions. When available, select an option to specify a solution containing the modes to be used in the reduced model.

Use the **Eigenpairs** list to specify which of the eigenpairs present in the solution to include when constructing the reduced model. The default setting is **All** and the solver uses all available eigenpairs. Select **Manual** to enter a space-separated list of **Eigenpair numbers** in the field.

Use the **Damping ratios** field to enter either a scalar value or a space-separated list with values. The total number of entered values must be one or equal to the number of eigenpairs in the reduced model. If one number is entered, that value becomes the damping ratio for all eigenpairs. If the field is empty (the default), no damping is applied by the solver.

VALUES OF LINEARIZATION POINT

A frequency-domain problem solved by the **Modal Solver** is assumed to be a linearization about a solution. You can specify such a solution (a linearization point) with the **Prescribed by** list. Select:

- **Initial expression** to use the expressions specified on the **Initial Values** nodes under a specific physics interface as a linearization point.
- **Solution** to use a solution as a linearization point. Then, when **Solution** is selected from the **Prescribed by** list, specify which solution to use**.** Select:
  - **Zero** to use a linearization point that is identically equal to zero.
  - Any other available solution to use it as linearization point.

Select the **Store linearization point and deviation in output** check box to store the used linearization point in the output.

OUTPUT

The output from the solver can either be the solution, the reduced matrices, or both.

If **Reduced matrices** is selected, click to select the check boxes corresponding to matrices and vectors that should be stored in the output. The following matrices and vectors can be exported for all modal solvers: **Stiffness matrix**, **Damping matrix**, **Damping ratio matrix**, **Mass matrix**, **Projection matrix**, **Load vector**, **Input matrix**, **Output matrix**, **Output bias**, and **Input feedback matrix**. For Time Dependent, Modal studies the following can also be exported: **Time derivative input matrix**, **Second time derivative input matrix**, **Initial value vector**, **Initial derivative vector**, **Initial value input matrix**, **Initial value time derivative input matrix**, **Stiffness matrix times ud**, and state-space matrices (**Mc**, **MA**, **MB**, **Null**, **D**, **C**, **ud**, and **x0**). For Frequency Domain, Modal studies the following can also be exported: **Mass matrix times particular solution**, **Damping matrix times particular solution**, and **All load vectors**.

ADVANCED

Use the **Load factor** field to enter a globally available scalar-valued expression (default: 1). The solver uses this expression to multiply the residual. The purpose is to facilitate the use of simple nonconstant Dirichlet boundary conditions (for frequency response) and simple nonconstant Neumann boundary conditions (for transient response).

CONSTANTS

In this section you can define constants that can be used as temporary constants in the solver. You can use the constants in the model or to define values for internal solver parameters. These constants overrule any previous definition (for example, from Global Definitions). Some examples of when it can be useful to define constants for a solver:

- When doing more advanced solver sequences, where constants need to be changed in between calls (for example, in for-loops).
- When you do not want to change the global definition of a parameter or when you cannot or do not want to use a Parametric Solver feature.
- When you want to define auxiliary parameters that are part of the equations like `CFLCMP` or `niterCMP` and where the solver does not define these parameters.

Click the **Add** button (+) to add a constant and then define its name in the **Constant name** column and its value (a numerical value or parameter expression) in the **Constant value** column. By default, any defined parameters are first added as the constant names, but you can change the names to define other constants. Click **Delete** ( ) to remove the selected constant from the list.

LOG

Select the **Keep warnings in stored log** check box if you want the warnings to remain in the log for troubleshooting or other use.

Optimization Solver

The **Optimization Solver** ( ) provides the settings for solving PDE-constrained optimization problems. This solver requires the Optimization Module. See the *Optimization Module User's Guide* for details. Also see The Log Window (The Optimization Solver Log).

	Optimization in the *COMSOL Multiphysics Programming Reference Manual*.

Plug Flow Solver

The **Plug Flow Solver** ( ) is the default solver for Stationary Plug Flow study steps, and it is a version of the Time-Dependent Solver, except it steps in *volume* instead of time. This is indicated in the output section where volume settings are available. It is specially designed to solve plug flow reactor models set up in the Reaction Engineering interface, which requires the Chemical Reaction Engineering Module.

Stationary Solver

Use the **Stationary Solver** ( ) to find the solution to linear and nonlinear stationary problems (also called static or steady-state problems). This solver is automatically used when a Stationary or Frequency Domain study is added to the model.

Also see About the Stationary Solver for information about Damped Newton Methods, Linear Solvers versus Nonlinear Solvers, and Pseudo Time Stepping.

GENERAL

Use the **Defined by study step** list to specify if the settings are synchronized with the corresponding study step.

The number in the **Relative tolerance** field (default: 0.001) is used for tolerance-based termination of iterative solver processes and for error checking (if enabled) for direct linear system solvers.

	The termination tolerance used for iterative processes is also influenced by values specified in the **Tolerance factor** fields present in active Fully Coupled, Segregated, and Segregated Step subnodes. See Termination Criterion for the Fully Coupled and Segregated Attribute Nodes for details.

Use the **Linearity** list to specify whether to use a nonlinear or linear solver. Select:

- **Automatic** to perform an analysis that automatically detects if the problem can be solved with a linear solver approach. If this option is selected, no other settings are required.
- **Linear** to use a linear solver. This option uses the same linearization point for both residual and Jacobian computation and corresponds to one step in Newton's method.
- **Linear perturbation** to use a linear solver. This option computes the Jacobian in the same way as the **Linear** option but uses a zero solution when computing the residual. It is useful for small-signal analysis and similar applications where the variations around a linearization point are of interest.
- **Nonlinear** to use a nonlinear solver. If this option is selected, no other settings are required.

Values of Linearization Point

If **Linear** or **Linear perturbation** is selected, COMSOL assumes that the problem to be solved is a linearization about a solution. Specify such a solution (a linearization point) using the **Prescribed by** list. Select:

- **Initial expression** to use the expressions specified on the **Initial Values** nodes under a specific physics interface as a linearization point.
- **Solution** to use a solution as a linearization point. Use the **Solution** list to specify which solution to use if **Prescribed by** has been set to **Solution**. Select:
  - **Zero** to use a linearization point that is identically equal to zero.
  - Any other solution to use it as linearization point. It can be the current solution in the sequence or a solution from another sequence or a solution that was stored with the Solution Store node. You select a stored solution by changing **Use** to the name of the stored solution.

Select the **Store linearization point and deviation in output** check box to store the used linearization point. Also see Linear Solvers versus Nonlinear Solvers.

OUTPUT

Select the **Reaction forces** check box to compute and store reaction forces in the output.

The computation of boundary flux variables involves solving a system of equations to obtain a continuous field from nodal flux values. If the **Use lumping when computing fluxes** check box is selected, this system of equations is lumped. The benefits of using this option is that it can avoid certain spurious oscillations in the computed flux field and that it is slightly faster. Lumping is not suitable in 3D for shape functions of order higher than 1.

RESULTS WHILE SOLVING

This section is not available in the following cases:

- When you add a Stationary Solver as a subnode to an Optimization node.
- In nested parametric sweeps, it is only available for the innermost sweep.
- When you use one of the following sweep study types: Function Sweep, Material Sweep, Batch Sweep, and Cluster Sweep.

To enable these settings, select **User defined** from the **Defined by study step** list under **General**. Select the **Plot** check box to allow plotting of results while solving in the **Graphics** window. Then select what to plot from the **Plot group** list and, for time dependent simulations, at which time steps to update the plot: the output times or the time steps taken by the solver. The software plots the dataset of the selected plot group as soon as the results become available. You can also control which probes to tabulate and plot the values from. The default is to tabulate and plot the values from all probes in the **Table** window and a **Probe Plot** window.

Use the **Probes** list to select any probes to evaluate. The default is **All**, which selects all probes for plotting and tabulation of probe data. Select **Manual** to open a list with all available probes. Use the **Move Up** ( ), **Move Down** ( ), **Delete** ( ), and **Add** ( ) buttons to make the list contain the probes that you want to see results from while solving. Select **None** to not include any probe.

CONSTANTS

In this section you can define constants that can be used as temporary constants in the solver. You can use the constants in the model or to define values for internal solver parameters. These constants overrule any previous

definition (for example, from Global Definitions). Some examples of when it can be useful to define constants for a solver:

- When doing more advanced solver sequences, where constants need to be changed in between calls (for example, in for-loops).
- When you do not want to change the global definition of a parameter or when you cannot or do not want to use a Parametric Solver feature.
- When you want to define auxiliary parameters that are part of the equations like `CFLCMP` or `niterCMP` and where the solver does not define these parameters (for the Stationary solver, `CFLCMP` is defined when pseudo-time stepping is used; `niterCMP` is defined by the nonlinear solvers).

Click the **Add** button (+) to add a constant and then define its name in the **Constant name** column and its value (a numerical value or parameter expression) in the **Constant value** column. By default, any defined parameters are first added as the constant names, but you can change the names to define other constants. Click **Delete** ( ) to remove the selected constant from the list.

LOG

This section, which is initially empty, contains a log from the time stepping. It is not available when the stationary solver is a subnode to another solver. This log is stored in the Model MPH-file. Select the **Keep warnings in stored log** to keep warning messages in this log so that the information in those warnings is also available when reopening the model.

	• *Automotive Muffler*: Application Library path **COMSOL_Multiphysics/Acoustics/automotive_muffler** • *Deformation of a Feeder Clamp*: Application Library path **COMSOL_Multiphysics/Structural_Mechanics/feeder_clamp**

	The Log Window

Time-Dependent Solver

Use the **Time-Dependent Solver** ( ) to find the solution to time-dependent problems (also called dynamic or unsteady problems) using the implicit time-stepping methods BDF or generalized-α or an explicit method from a family of Runge-Kutta methods for solving ordinary differential equations. This solver is automatically used when a Time Dependent study is added to the model.

Also see About the Time-Dependent Solver for information about The Implicit Time-Dependent Solver Algorithms and BDF vs. Generalized-α and Runge-Kutta Methods.

GENERAL

Use the **Defined by study step** list to specify if the settings are synchronized with the corresponding study step (the default). If you select **User defined** (to override the settings defined in the corresponding study node), you can specify the following settings:

- Use the **Time unit** list to choose a time unit that is suitable for the time span of the simulation. The default time unit is inherited from the corresponding setting in the study step.

- Use the **Times** field to enter a vector of times that define the time span for the simulation using the **Range** button ( ) if needed (default: `range(0,0.1.1)`).
- Use the **Relative tolerance** field to enter a positive scalar number (default: 0.01). The solver uses this number to control the relative error in each time step. The tolerance may need to be set to a smaller (tighter) value if the simulation results seem unexpected or inconsistent.

ABSOLUTE TOLERANCE

See Absolute Tolerance Settings for the Time-Dependent Solver for details about this section.

Specify an absolute tolerance that is used by the solver to control the absolute error. The tolerance specified here is applied to all variables unless modified per variable by selecting a method other than the global method for a variable.

Select a **Global method** to select how the specified absolute tolerance is to be interpreted for the variables that use the global method (by default, all variables use the global method). Select:

- **Scaled** to let the absolute tolerance be applied to scaled variables.
- **Unscaled** to let the absolute tolerance be applied to unscaled variables.

Select a **Tolerance method** to specify how to enter and compute the absolute tolerance. Select:

- **Factor** to specify a factor (default: 0.1) in the **Tolerance factor** field that makes the absolute tolerance proportional to the relative tolerance. With this method, the absolute error does not become dominating when you reduce the relative tolerance so that it is much smaller than the absolute tolerance.
- **Manual** to specify a value for the absolute tolerance. In the **Absolute tolerance** field, enter a positive number that is applied to either scaled or unscaled variables.

To specify the absolute tolerance individually for a variable, select from the **Variables** list and modify the corresponding tolerance using the **Method** list. Select:

- **Scaled** to apply the specified tolerance to scaled variables.
- **Unscaled** to apply the specified tolerance to unscaled variables.
- **Use global** (the default) to apply the tolerance specified for the global tolerance.

If **Scaled** or **Unscaled** is selected as the **Method**:

- Enter a **Tolerance** value to modify the absolute tolerance for the selected variable.
- If a problem of wave-equation type is being solved, *and* if **Method** in the **Time Stepping** section is set to **BDF**, then by default, the solver chooses a tolerance for these components. To manually enter a tolerance for a time derivative when using a first-order time integration method like BDF, select the **Tolerance, time derivative** check box and enter a tolerance in the associated field. The generalized-α method does not use this tolerance setting.

	The **Method** setting (**Scaled** or **Unscaled**) that is selected for a variable applies also to its time derivative.

Select the **Update scaled absolute tolerance** check box as needed. See Absolute Tolerance Settings for the Time-Dependent Solver for details.

TIME STEPPING (GENERAL SETTINGS)

Select a time-stepping **Method**. See BDF vs. Generalized-α and Runge-Kutta Methods for details about the implicit methods. Select:

- **BDF** to use a backward differentiation formula.

- **Runge-Kutta** to use an explicit method from the Runge-Kutta family of methods for ODEs. From the Runge-Kutta method choose one of the following time-stepping methods:
  - **RK34** (the default) combines adaptivity with good stability properties along the imaginary axis. It is therefore suitable for oscillatory problems.
  - **Cash-Karp 5** is similar to Dormand-Prince 5 but has an even larger stability region along the negative real axis. It is therefore more efficient for naturally damped problems.
  - **Dormand-Prince 5** (DOPRI5) method (see Ref. 13) provides estimates of the accuracy and stability by combining the Runge-Kutta steps using different sets of coefficients to get different order of accuracies.

  The Runge-Kutta methods are suitable for nonstiff problems. They do not support DAEs, and it is also not possible to combine them with events or with sensitivity analysis.
- **Generalized alpha** to use the generalized-α method.
- **Initialization only** to compute consistent initial values only and then stop. If this option is selected, no other settings are required.

TIME STEPPING (BDF AND GENERALIZED ALPHA)

The following settings are available when **BDF** or **Generalized alpha** is selected above.

If a Fully Coupled or Segregated attribute node is attached to a **Time** node, the settings for the nonlinear systems solved by the time-stepping methods come from that node.

	The time-stepping method **Generalized alpha** requires a **Fully Coupled** or **Segregated** attribute node. The time-stepping method **BDF** can be used without a **Fully Coupled** or **Segregated** attribute node. In such a situation, the **BDF** method uses an internal automatic nonlinear solver.

Steps Taken by Solver

To modify how the time-stepping methods select the time steps, choose an option from the **Steps taken by solver** list. Select:

- **Free** to let the time-stepping method choose time steps freely. The times specified in the **Times** field in the **General** section are not considered when a time step is chosen.
- **Intermediate** to force the time-stepping method to take at least one step in each subinterval of the times specified in the **Times** field in the **General** section.
- **Strict** to force the time-stepping method to take steps that end at the times specified in the **Times** field in the **General** section. The solver takes additional steps in between these times if necessary.
- **Manual** to override the automatic choice of time step with a manual choice. Manual time stepping can be useful in cases where the automatic time-step selection does not work; for example, in contact problems, rotating machinery, or fluid-structure interaction.

	Manual is available for **BDF** and **Generalized alpha** and overrides the local error estimation made in each time step.

Further options that apply to one or several combinations (as indicated at each bullet) of selections made in the **Method** and **Steps taken by solver** lists are:

If **Free**, **Intermediate**, or **Strict** is selected for the **Steps taken by solver**:

- **Initial step**. By default, the solver chooses an initial step automatically. Select the **Initial step** check box for manual specification of an initial step. By default, the first step is 0.1% of the end time, which can affect your solution so

that you do not get the same time-step history up to a certain earlier time when the end time is changed. This should, however, not change the result appreciably if you use tight enough tolerances for that the automatic time step control. Also, the results of the consistent initialization can be strongly dependent on the initial time step taken, if the initial conditions and the boundary conditions do not match, for example. If needed, you can change the values for the **Initial step** or the **Fraction of initial step for Backward Euler** (see below).

- **Maximum step constraint**. By default, the solver chooses a maximum time step automatically. Select **Constant** as the maximum step constraint for manual specification of a fixed maximum time step. A constant maximum step constraint is a positive scalar value, which can be an expression that evaluates to a numerical value before entering the solver. The expression can include global parameters. Select **Expression** as the maximum step constraint for more general expressions of the allowed maximum time step. These expressions are evaluated while solving and can, for instance, depend on the time parameter itself.

The solver uses the absolute value of the expression for the maximum step constraint.

Additionally, if **BDF** is selected as the time stepping **Method**:

- **Maximum BDF order** (available if **Free**, **Intermediate**, or **Strict** is selected for the **Steps taken by solver**). This setting controls the maximum allowed degree of the interpolating polynomial of the BDF method.
- **Minimum BDF order** (available if **Free**, **Intermediate**, or **Strict** is selected for the **Steps taken by solver**). This setting can be used to prevent the solver from decreasing the order of the BDF method below 2.
- **BDF order** (available if **Manual** is selected for the **Steps taken by solver**). The order of the BDF can be 1–5 (default order: 2).
- **Initial step fraction** (available if **Manual** is selected for the **Steps taken by solver**). During the startup of the BDF method, a shorter time step will be used to compensate for the lower order that is used for the first handful of steps. The initial step is a fraction of the first step, and the solver then exponentially increases the step length until the requested step length is reached. This settings and the initial step growth rate below control that startup phase. The default values depend on the selected BDF order.
- **Initial step growth rate** (available if **Manual** is selected for the **Steps taken by solver**).
- **Time step** (available if **Manual** is selected for the **Steps taken by solver**). Enter a manual time step specification as a scalar, a vector of times, or an expression containing global variables or parameters in the **Time step** field. The relative and absolute tolerances are still used to terminate the algebraic equations at each time step. Also, the requested time step will be reduced if the algebraic solver does not converge.
- **Event tolerance**. This setting can be used to set the event tolerance (default value: 0.01), which is used for root finding of event conditions when using implicit events; see Explicit Event.

This does not apply to the start-up phase of the simulation.

- **Nonlinear controller**. Select this check box to use a nonlinear controller for more efficient time-step control in the BDF method, especially for highly nonlinear problems such as multiphase flow and turbulence in fluid dynamics. When nonlinear failures occur, the nonlinear controller becomes active and uses a more careful time step control. The nonlinear controller acknowledges that the step size for Newton stability might be smaller than the step size for BDF accuracy.

If **Generalized alpha** is selected as the time stepping **Method**:

- **Time step increase delay** (available if **Free**, **Intermediate**, or **Strict** is selected for the **Steps taken by solver**). Select this check box and enter a positive integer in the field to make the solver more restrictive when increasing the time step. This integer is the number of time steps taken by the solver before the increase of the time step is actually performed, from the first step where the error estimator signals that the current step is too small. This setting is useful when there is a natural variation in the solution, like periodicity or quasi-periodicity, which make the time steps vary up and down in size. The generalized-α method does not work well when the time step changes often, so in those situations it is better to damp the changes by a more conservative strategy using this setting. Entering 0 results in the same behavior as clearing the check box.
- **Time step** (available if **Manual** is selected for the **Steps taken by solver**). Enter a manual time step specification as a scalar, a vector of times, or an expression containing global variables or parameters in the **Time step** field.
- **Amplification for high frequency**. Enter a number between 0 and 1 to control how much damping of high frequencies the solver provides. A value close to 0 results in efficient damping, while a number close to 1 results in little damping.
- **Predictor**. Select **Linear** to use linear extrapolation of the present solution to construct the initial guess for the nonlinear system of equations to be solved at the next time step. Select **Constant** to use the current solution as initial guess.

Also, the following settings are available for the BDF and generalized-α methods:

Algebraic Variable Settings

Use the **Singular mass matrix** list to control whether the solver automatically determines if a system includes a differential-algebraic equation or not. Select:

- **Maybe** to make the solver look for zero-filled rows or columns in the mass matrix as a means of detecting a differential-algebraic equation.
- **Yes** if the model includes a differential-algebraic equation where the mass matrix has no zero-filled rows or columns.

Use the **Consistent initialization** list to control how the solver performs consistent initialization of differential-algebraic systems. The consistent initialization procedure tries to reconcile inconsistent initial values. In doing that, it takes a small time step (by default, 0.1% of the initial step size). If, for example, you have boundary conditions and initial conditions that do not match, the results of the consistent initialization is strongly dependent on the initial time step taken. Select:

- **Backward Euler** (the default) to perform consistent initialization using a small artificial step with the backward Euler method. When this is selected, enter a value in the **Fraction of initial step for Backward Euler** field. This value is a dimensionless quantity that determines the size of the time step for the backward Euler method (in terms of the initial step). Adjusting this value can improve the accuracy of the initialization step but can also affect the start-up of some models. The default value is 0.001 (that is, the small backward Euler step size is 0.1% of the initial step size).
- **Off** to indicate that the initial values already are consistent, which means that the solver does not modify them.
- **On** to use a consistent initialization routine that is preferable to **Backward Euler** for index-1 differential-algebraic equations.

	The **On** option is only available when **Time method** is set to **BDF** at the same time that the internal nonlinear solver of the BDF method is used.

Use the **Error estimation** list to control how to treat algebraic degrees of freedom of a differential-algebraic system when estimating the time discretization error. Select:

- **Include algebraic** (the default) to include the algebraic degrees of freedom in the error norm.

- **Exclude algebraic** to exclude the algebraic degrees of freedom from the error norm.

  Excluding algebraic degrees of freedom (which stem from stationary equations in the model) means that the algebraic variables are not included in the error test for the time step. The algebraic variables are still solved for as part of the general system of equations. Excluding the algebraic variables from the error test might have the effect that the constraints (including hidden constraints, which are implicitly part of the equations) are not accurately fulfilled. In general, excluding algebraic degrees of freedom is not recommended when solving DAE systems of index 1, whereas it can be generally encouraged for DAE systems of index 2 (see Ref. 6).

If **Backward Euler** is selected from the **Consistent initialization** list, select the **Rescale after initialization** check box if you want to perform an rescaling of the variables. In fluid-flow simulations, for example, the scaling for velocity can be problematic because the velocity is often zero at the start but then changes dramatically after a consistent initialization. Rescaling of the velocity and pressure can provide a smoother start and avoid using very small time steps.

TIME STEPPING (RUNGE-KUTTA METHODS)

The following settings are available when **Runge-Kutta** is selected as the time-stepping method:

Steps Taken by Solver

To modify how the Runge-Kutta time-stepping methods select the time steps, choose an option from the **Steps taken by solver** list. Select:

- **Free** to let the time-stepping method choose time steps freely. The times specified in the **Times** field in the **General** section are not considered when a time step is chosen.
- **Intermediate** to force the time-stepping method to take at least one step in each subinterval of the times specified in the **Times** field in the **General** section.
- **Strict** to force the time-stepping method to take steps that end at the times specified in the **Times** field in the **General** section. The solver takes additional steps in between these times if necessary.
- **Manual** to override the automatic choice of time step with a manual choice.

Further options that apply to one or several combinations (as indicated at each bullet) of selections made in the **Method** and **Steps taken by solver** lists are:

If **Free**, **Intermediate**, or **Strict** is selected for the **Steps taken by solver**:

- **Initial step**. By default the solver chooses an initial step automatically. Select the **Initial step** check box for manual specification of an initial step.

  The following settings for **Free**, **Intermediate**, and **Strict** are only available for the Dormand-Prince time-stepping method:
- **Maximum step**. By default the solver chooses a maximum time step automatically. Select the **Maximum step** check box for manual specification of a maximum time step. The maximum time step is a positive scalar value, which can be an expression that evaluates to a numerical value. The expression can include global parameters.
- **Minimum step size growth ratio** and **Maximum step size growth ratio**. These growth ratio limits restrict how fast the step size may change, enforcing that the values of the ratio $h_{\text{new}}/h_{\text{old}}$ is within the minimum step size growth ratio (default: 0.2) and the maximum step size growth ratio (default: 10).
- **Step size safety factor**. The solver multiplies this factor (default: 0.9) to the estimated largest allowed step size to avoid taking too large step sizes when the estimate overshoots.
- **PI step controller**. This setting affects the behavior of the PI (proportional-integral) controller that adds damping on step size changes to avoid choosing too large steps, which would then be rejected. The default value is **Quick**, which corresponds to a PI controller that responds quickly to changes. The **Smooth** option sets the controller to react more slowly, giving smoother choices of time steps. You can also turn off the PI controller by selecting

Disabled. This setting affects the parameters α and β in the relation $h_{n+1} = Sh_n(\mathrm{err}_n)^{-\alpha}(\mathrm{err}_{n-1})^{\beta}$. Here S is the safety factor described above, and err_i is the estimated error in step i.

If **Manual** is selected for the **Steps taken by solver**:

- **Time step**. Enter a manual time step specification as a scalar, a vector of times, or an expression containing global variables or parameters in the **Time step** field.

For all options in the **Steps taken by solver** list, you can also activate or turn off detection of numerical stiffness using the **Stiffness detection** check box (selected by default). If active, the stiffness detection uses a mechanism to detect if the problem that you solve becomes numerically stiff (which means that an explicit time stepping is required to take very small time steps). If the problem is considered to be stiff, an error appears and the solver stops. You can then switch to another solver that is better suited for stiff problems, such as an implicit BDF method.

RESULTS WHILE SOLVING

This section mirrors what is defined for the Time Dependent node's **Results While Solving** section. That is, changes made to the Time-Dependent node are reflected here.

OUTPUT

Use the **Times to store** list to control at what times the solver stores a solution. Select:

- **Specified values** to store solutions at the values entered in the **Times** field in the **General** section.
- **Steps taken by solver** to store solutions at the time steps taken by the solver.

	The selection made in the list **Steps taken by solver** in the **Time Stepping** section influences the output in this situation.

- Select the **Store reaction forces** check box to compute and store reaction forces in the output. This option is not supported when using any of the Runge-Kutta time-stepping methods.
- The computation of boundary flux variables involves solving a system of equations to obtain a continuous field from nodal flux values. If the **Use lumping when computing fluxes** check box is selected, this system of equations is lumped. The benefits of using this option is that it can avoid certain spurious oscillations in the computed flux field and it is also slightly faster. Lumping is not suitable in 3D for shape functions of order higher than 1. Lumping is not supported when using any of the Runge-Kutta time-stepping methods.
- Select the **Store time derivatives** check box to store time derivatives of the variables solved for in the output. Storing the time derivatives gives more accurate results when evaluating quantities that involve these time derivatives.
- Select the **Store solution before and after events** check box to store two additional solutions every time an implicit or explicit event is triggered. See The Events Interface. This stores the solutions before and after the reinitialization.

ADVANCED

Select the **Allow complex numbers** check box to be able to solve problems that are not automatically determined to be complex-valued in a correct way.

LEAST-SQUARES DATA

The section only appears if your license includes the Optimization Module and you are solving a time-dependent least-squares optimization problem.

Least-squares times are read from files pointed out by the least-squares objective nodes in an Optimization interface. If there is a least-squares objective with a time column, the time values are displayed under **Least-squares times from file**. If **Use least-squares times from file** is on (which is the default), the least-squares times are read and merged with the user-defined time list at runtime. The merged data governs the setup of the time-dependent solver.

General parameter values list here refers to the list of times in the **General** section above. If **Exclude times outside General parameter value lists** is on (which is the default), start and end simulation times that you have provided are respected when merging with time values from files. Time values from files outside the user-defined time range are ignored. Otherwise (that is, **Exclude times outside General parameter value lists** is off), all time values from files are used and merged with the user-defined time list.

If **Use least-squares times from file** is off, no time values from files are used.

You can change the default values of **Use least-squares times from file** and **Exclude times outside General parameter value lists** only if **Defined by study step** is set to **User defined**.

CONSTANTS

In this section you can define constants that can be used as temporary constants in the solver. You can use the constants in the model or to define values for internal solver parameters. These constants overrule any previous definition (for example, from Global Definitions). Some examples of when it can be useful to define constants for a solver:

- When doing more advanced solver sequences, where constants need to be changed in between calls (for example, in for-loops).
- When you do not want to change the global definition of a parameter or when you cannot or do not want to use a Parametric Solver feature.
- When you want to define auxiliary parameters that are part of the equations like `CFLCMP` or `niterCMP` and where the solver does not define these parameters (`niterCMP` is defined by the nonlinear solvers).

Click the **Add** button (+) to add a constant and then define its name in the **Constant name** column and its value (a numerical value or parameter expression) in the **Constant value** column. By default, any defined parameters are first added as the constant names, but you can change the names to define other constants. Click **Delete** ( ) to remove the selected constant from the list.

LOG

This section, which is initially empty, contains a log from the time stepping. This log is stored in the MPH-file. Select the **Keep warnings in stored log** to keep warning messages in this log so that the information in those warnings is available also when reopening the model.

The Log Window (The Time-Dependent Solver Log)

The Black-Scholes Equation: Application Library path
COMSOL_Multiphysics/Equation_Based/black_scholes_put

Time Discrete Solver

Use the **Time Discrete Solver** ( ) to find the solution to time-dependent problems (dynamic or unsteady problems) that have already been discretized in time using, for example, the `prev` operator or the `bdf` operator. This solver is automatically used when a Time Discrete study is added to the model.

See About the Time Discrete Solver for background information.

GENERAL

Use the **Defined by study step** list to specify if the settings are synchronized with the corresponding study step.

Use the **Times** field to enter a vector of times that define the simulation's time span.

The time step is specified in the **Time step** field. Valid entries are a scalar, a vector of times, or an expression containing global expression variables.

Discretizing time derivatives using the `prev` operator or the `bdf` operator requires the solution at previous discrete times. How many previous time steps should be stored is specified in the **Number of time discrete levels** field. If you, for example, use the first-order `bdf` operator (`bdf(u,1)`), the solution at one previous time step is required. Using the second-order `bdf` operator (`bdf(u,2)`) requires the solution at two previous time steps. The default value is 2.

Use the **Relative tolerance** field to enter a positive number. This number controls how accurately the nonlinear system of equations is solved in each time step. In general, the desired relative error in the solution should be entered here.

ABSOLUTE TOLERANCE

Here you can specify an absolute tolerance that the nonlinear solver uses to control the absolute error. The tolerance specified here is applied to all variables unless modified per variable by selecting a method other than the global method for a variable.

Use the **Global method** list to select how the specified absolute tolerance is to be interpreted for the variables that use the global method (by default, all variables use the global method). Select:

- **Scaled** to let the absolute tolerance be applied to scaled variables.
- **Unscaled** to let the absolute tolerance be applied to unscaled variables.

Select a **Tolerance method** to specify how to enter and compute the absolute tolerance. Select:

- **Factor** to specify a factor (default: 0.1) in the **Tolerance factor** field that makes the absolute tolerance proportional to the relative tolerance. With this method, the absolute error does not become dominating when you reduce the relative tolerance so that it is much smaller than the absolute tolerance.
- **Manual** to specify a value for the absolute tolerance. In the **Absolute tolerance** field, enter a positive number that is applied to either scaled or unscaled variables.

To specify the absolute tolerance individually for a variable, select the variable from the **Variables** list and modify the corresponding tolerance with the **Method** list. Select:

- **Scaled** to apply the specified tolerance to scaled variables.
- **Unscaled** to apply the specified tolerance to unscaled variables.
- **Use global** (the default) to apply the tolerance specified for the global tolerance.

If you select **Scaled** or **Unscaled**, additional fields appear. Use the **Tolerance** field to modify the absolute tolerance for the selected variable.

RESULTS WHILE SOLVING

See Time-Dependent Solver for these settings.

OUTPUT

Use the **Times to store** list to control at what times the solver stores a solution. Select:

- **Specified times** to store solutions at the times entered in the **Times** field in the **General** section.
- **Steps taken by solver** to store solutions at the time steps taken by the solver.

When **Specified times** is selected, the solution to output is computed through interpolation. Therefore, the solution at previous time steps is not computed, which means that expressions with the `prev` and `bdf` operators cannot be used in analysis. Such expressions can only be used in analysis when you have selected **Steps taken by solver**.

CONSTANTS

In this section you can define constants that can be used as temporary constants in the solver. You can use the constants in the model or to define values for internal solver parameters. These constants overrule any previous definition (for example, from Global Definitions). Some examples of when it can be useful to define constants for a solver:

- When doing more advanced solver sequences, where constants need to be changed in between calls (for example, in for-loops).
- When you do not want to change the global definition of a parameter or when you cannot or do not want to use a Parametric Solver feature.
- When you want to define auxiliary parameters that are part of the equations like `CFLCMP` or `niterCMP` and where the solver does not define these parameters (`niterCMP` is defined by the nonlinear solvers).

Click the **Add** button (+) to add a constant and then define its name in the **Constant name** column and its value (a numerical value or parameter expression) in the **Constant value** column. By default, any defined parameters are first added as the constant names, but you can change the names to define other constants. Click **Delete** ( ) to remove the selected constant from the list.

LOG

This section, which is initially empty, contains a log from the time stepping. Select the **Keep warnings in stored log** check box as needed.

Time Explicit Solver

Use the **Time Explicit Solver** ( ) to find the solution to time-dependent problems (also called dynamic or unsteady problems) using the family of Runge-Kutta explicit time-stepping schemes or the Adams-Bashforth 3 solver. This solver is used with a Time Dependent study.

Also see The Time Explicit Solver Algorithms.

GENERAL

Use the **Defined by study step** list to specify if the settings are synchronized with the corresponding study step. You can also select **User defined** to define all settings locally.

Use the **Times** field to enter a vector of times that define the time span for the simulation. Click the **Range** button ( ) to define a range using the **Range** dialog box.

Use the **Method** list to specify the time-explicit method: **Adams-Bashforth 3**, **Adams-Bashforth 3 (local)** (available for the Wave Form PDE interface), or the classic **Runge-Kutta** family.

For Runge-Kutta, select the order of the time-stepping scheme from the **Order** list.

From the **Time stepping** list, for Runge-Kutta and Adams-Bashforth 3, specify **Manual** or time stepping **From expressions,** where the latter is useful for the Wave Form PDE. When you use **From expression**, a list of **Cell time scale**

expressions appear, where you can add such expressions to define the time stepping. For explicit methods, the largest stable time step can automatically be computed from an expression. Some physics interfaces (Wave Form PDE, for example) define such an expression in terms of an estimated maximum wave speed (defined by the interface) and the element size (`wahw.wtc`). Here the element order is also taken into account. The expression should in general represent a local cell time scale. For wave problems, the expression should be proportional to the time it takes for the fastest wave to pass one mesh element. Each expression given is evaluated on all mesh elements. The smallest value (time scale), over all elements and all expressions, dictates the time step used. If you select **User defined** from the **Defined by study step** list, you can use the **Add** button (+) and the **Delete** button ( ) to add or delete rows in the list.

The time step is specified in the **Time step** field when **Time stepping** manual is selected. Valid entries are a scalar, a vector of times, or an expression containing global expression variables. The default value is 0.001 s ($1e^{-3}$ s).

Use the **Linear solver** list to select the linear solver to be used within the time stepping scheme to invert the mass matrix. Available linear solvers appear in the model tree. The default is to use the **Direct** linear solver. For cheap but approximate inversion of the mass matrix, use the **Lumped** option.

This option can only be used together with a linear space discretization.

In rare cases, when the PDE is nonlinear, you can adjust the **Relative tolerance** (default value: 0.01).

RESULTS WHILE SOLVING

See Time Dependent for these settings.

OUTPUT

See Time Discrete Solver for these settings.

CONSTANTS

See Time Discrete Solver for these settings.

OUTPUT

See Time Discrete Solver for these settings.

References for the Solution Operation Nodes and Solvers

1. P.E. Gill, W. Murray, and M.A. Saunders, *User's Guide for SNOPT Version 7: Software for Large-Scale Nonlinear Programming*, Systems Optimization Laboratory (SOL), Stanford University, 2006.

2. P.E. Gill, W. Murray, and M.A. Saunders, "SNOPT: An SQP Algorithm for Large-Scale Constrained Optimization", *SIAM Review*, vol. 47, no. 1, pp. 99–131, 2005.

3. P. Deuflhard, "A Modified Newton Method for the Solution of Ill-conditioned Systems of Nonlinear Equations with Application to Multiple Shooting", *Numer. Math.*, vol. 22, pp. 289–315, 1974.

4. A.C. Hindmarsh, P.N. Brown, K.E. Grant, S.L. Lee, R. Serban, D.E. Shumaker, and C.S. Woodward, "SUNDIALS: Suite of Nonlinear and Differential/Algebraic Equation Solvers", *ACM T. Math. Software*, vol. 31, p. 363, 2005.

5. P.N. Brown, A.C. Hindmarsh, and L.R. Petzold, "Using Krylov Methods in the Solution of Large-Scale Differential-Algebraic Systems", *SIAM J. Sci. Comput.*, vol. 15, pp. 1467–1488, 1994.

6. P.K. Moore and L.R. Petzold, "A Stepsize Control Strategy for Stiff Systems of Ordinary Differential Equations", *Applied Numerical Mathematics*, vol. 15, pp. 449–463, 1994.

7. K.E. Brenan, S.L. Campbell, and L.R. Petzold, *Numerical Solutions of Initial-Value Problems in Differential-Algebraic Equations*, pp. 146–147, SIAM, Philadelphia, Pa, 1996.

8. J. Demmel and others, "Error Bounds from Extra Precise Iterative Refinement," *ACM Transactions on Mathematical Software (TOMS)*, vol. 32, issue 2, pp. 325–351, 2006.

9. J. Chung, G.M. Hulbert, "A Time Integration Algorithm for Structural Dynamics with Improved Numerical Dissipation: The Generalized-α Method", *J. Appl. Mech.*, vol. 60, pp. 371–375, 1993.

10. K.E. Jansen, C.H. Whiting, G.M. Hulbert, "A Generalized-α Method for Integrating the Filtered Navier–Stokes Equations with a Stabilized Finite Element Method", *Comput. Methods Appl. Mech. Engrg.*, vol. 190, pp. 305–319, 2000.

11. J.R. Dormand and P.J. Prince, "A family of embedded Runge-Kutta formulae", *Journal of Computational and Applied Mathematics*, vol. 6 (1), pp. 19–26, 1980.

12. The ARPACK Arnoldi package, www.caam.rice.edu/software/ARPACK.

13. P. Deuflhard, "A Stepsize Control for Continuation Methods and its Special Application to Multiple Shooting Techniques", *Numer. Math.*, vol. 33, pp. 115–146, 1979.

14. R. Verfürth, *A Review of a Posteriori Error Estimation and Adaptive Mesh-Refinement Techniques*, Teubner Verlag and J. Wiley, Stuttgart, 1996.

15. R. Rannacher, "A Feed-back Approach to Error Control in Finite Element Methods: Basic Analysis and Examples", *East-West J. Numer. Math.*, vol. 4, pp. 237–264, 1996.

16. www.netlib.org/ode.

17. J. Jin, *The Finite Element Method in Electromagnetics*, John Wiley & Sons, New York, 2002.

18. L.T. Pillage and R.A. Rohrer, "Asymptotic Waveform Evaluation for Timing Analysis", *IEEE Transactions on Computer-Aided Design*, vol. 9, pp. 352–366, 1990.

19. M.A. Kolbehdari, M. Srinivasan, M.S. Nakhla, Q.J. Zhang, and R. Achar, "Simultaneous Time and Frequency Domain Solutions of EM Problems Using Finite Elements and CFH Techniques", *IEEE Transactions on Microwave Theory and Techniques*, vol. 44, pp. 1526–1534, 1996.

20. https://en.wikipedia.org/wiki/Window_function.

Solution Attribute Nodes

The first few sections provide some background information about the linear system solvers and preconditioners and the algorithms used:

- About the Advanced Attribute Settings
- Choosing the Right Linear System Solver
- About Incomplete LU
- The Adaptive Mesh Refinement Solver
- The Domain Decomposition Solvers
- The Fully Coupled Attribute and the Double Dogleg Method
- The Iterative Solvers
- The Multigrid Solvers
- The Parametric Solver Algorithm
- The SCGS Solver
- The Segregated Solver
- The Sensitivity Analysis Algorithm
- About the SOR, SOR Gauge, SOR Line, and SOR Vector Iterative Solver Algorithms
- The Vanka Algorithm

About Solver Commands in the *COMSOL Multiphysics Programming Reference Manual*.

Then the settings for the solver attribute nodes — such as preconditioners, adaptive mesh refinement, and sensitivity analysis listed in Table 20-6 — are detailed. There is also a list of the References for the Linear System Solvers and the Preconditioners.

TABLE 20-6: SOLUTION ATTRIBUTE NODES

ICON	NAME	DESCRIPTION
	Adaptive Mesh Refinement	Handles adaptive mesh refinement together with a Stationary, Eigenvalue, or Time-Dependent solver. The adaptive mesh refinement creates multiple meshes for segments of a time-dependent simulation. Also see The Adaptive Mesh Refinement Solver.
	Advanced	Advanced general solver parameters.
	Auxiliary-Space Maxwell (AMS)	Handles parameters for linear system solvers/preconditioners that use the auxiliary-space Maxwell solver (AMS). Add it to Iterative, Krylov Preconditioner, or Coarse Solver attributes.
	Automatic Remeshing	Adds automatic remeshing parameters. The remeshing occurs when the mesh quality falls below a specified value. Add it to a Time-Dependent solver.
	Coarse Solver	Handles settings for the coarse solver when using a Multigrid or Domain Decomposition (Schwarz) solver.
p(x)	Control Field	Handles settings for field variables that are acting as control variables. Control variables have a special status when using the Sensitivity or Optimization solver. Used together with the Dependent Variables operation node.

TABLE 20-6: SOLUTION ATTRIBUTE NODES

ICON	NAME	DESCRIPTION
	Control State	Handles settings for state variables that are acting as control variables. Control (state) variables have a special status when using the Sensitivity or the Optimization solver. Used together with the Dependent Variables operation node.
	Direct	Handles settings for a direct linear solver.
	Direct Preconditioner	Handles settings for a direct linear solver used as a preconditioner.
	Domain Decomposition (Schur)	Used to set up an additive or multiplicative Schur domain decomposition solver. Add it to an Iterative solver or a Coarse Solver attribute. Also see The Domain Decomposition Solvers.
	Domain Decomposition (Schwarz)	Used to set up an additive, multiplicative, hybrid, or symmetric Schwarz overlapping domain decomposition solver. Add it to an Iterative solver or a Coarse Solver attribute. Also see The Domain Decomposition Solvers.
	Domain Solver	Handles settings for the domain solver when using a Domain Decomposition (Schwarz) or Domain Decomposition (Schur) solver.
	Eigenvalue Parametric	Used for an eigenvalue parametric study. This attribute can be used together with the Eigenvalue Solver.
	Error Estimation	Display information about the functional for goal-oriented error estimation.
	Domain Solver	Handles settings for the domain solver (when using Domain Decomposition).
	Field	Handles settings for field variables, including settings for storing the field in the output or not. Each field variable needs a separate Field node. This attribute is used with the Dependent Variables operation node.
	Fully Coupled	Uses a damped version of Newton's method or a double dogleg method that handles parameters for a fully coupled solution approach. It can be used with the Stationary or Time-Dependent solvers. Also see The Fully Coupled Attribute and the Double Dogleg Method.
	Hierarchical LU	Handles hierarchical LU factorization for the BEM solver.
	Incomplete LU	Handles parameters for linear system solvers/preconditioners that use incomplete LU factorization. Add it to Iterative, Krylov Preconditioner, or Coarse Solver attributes.
	Iterative	Handles settings for an iterative linear solver or preconditioner. Also see The Iterative Solvers.
	Jacobi	Handles settings for the Jacobi (or diagonal scaling) method. Add it to Iterative, Krylov Preconditioner, Presmoother, Postsmoother, or Coarse Solver attributes.
	Krylov Preconditioner	Handles settings for the Krylov-type linear solver or preconditioner. Add it to Iterative, Presmoother, Postsmoother, Coarse Solver, or Schur Solver attributes.
	Localized Schur	Handles settings for the localized Schur solver. Add it to Domain Decomposition>Schur Solver nodes.
	Lower Limit	Parameters for imposing restrictions on degrees of freedom. Add it to a Segregated attribute.
	Lumped Step	Available with a Segregated attribute node. This step is intended for speeding up the computation of any L_2-projections, stemming from the identity operator, appearing as single physics interface within a multiphysics problem.
	Multigrid	Handles settings for a multigrid linear solver or preconditioner. Add it to Iterative, Krylov Preconditioner, Presmoother, Postsmoother, or Coarse Solver attributes. Also see The Multigrid Solvers.

TABLE 20-6: SOLUTION ATTRIBUTE NODES

ICON	NAME	DESCRIPTION
	Parametric	Handles settings for parameter stepping. This attribute can be used together with the Stationary Solver. Also see The Parametric Solver Algorithm.
	Postsmoother	Handles settings for the postsmoother (when using Multigrid).
	Presmoother	Handles settings for the presmoother (when using Multigrid).
	Previous Solution	An optional attribute node of the Parametric attribute node. It handles field variables that have to be accessed at a previous parameter value or time.
	Sparse Approximate Inverse (SAI)	Handles settings for the SAI (sparse approximate inverse) preconditioner, pre- and post-smoother, or coarse solver. Add it to Iterative, Iterative>Krylov Preconditioner, Multigrid>Presmoother and Postsmoother, and Domain Decomposition>Coarse Solver and Domain Solver nodes.
	Sparse Localized Schur	Handles settings for the sparse localized Schur solver. Add it to Domain Decomposition>Schur Solver nodes (it is the default Schur solver).
	SCGS	Handles the SCGS (symmetrically coupled Gauss-Seidel) solver, which is useful as a preconditioner for solving the Navier-Stokes equations and similar fluid-flow problems. Also see The SCGS Solver.
	Schur Solver	Handles settings for the Schur solver when using Domain Decomposition (Schur).
	Segregated	Handles parameters for a segregated solution approach. This attribute makes it possible to split the solution process into substeps. Each substep uses a damped version of Newton's method. Add it to Stationary and Time Dependent solvers. Also see The Segregated Solver.
	Segregated Step	Handles settings for one substep of a segregated iteration. This attribute uses a damped version of Newton's method and can be used together with a Segregated attribute node.
	Sensitivity	Sensitivity parameters. Also see The Sensitivity Analysis Algorithm.
	SOR	Handles settings for the SOR (successive over-relaxation) iterative method. Add it to Iterative, Krylov Preconditioner, Presmoother, Postsmoother, or Coarse Solver attributes. Also see The SOR Method.
	SOR Gauge	Handles settings for an SOR Gauge-type linear solver or preconditioner. Also see The SSOR Gauge, SOR Gauge, and SORU Gauge Algorithms.
	SOR Line	Handles settings for an SOR Line linear solver or preconditioner. Also see The SOR Line Algorithm.
	SOR Vector	Handles settings for an SOR Vector-type linear solver or preconditioner. Also see The SOR Vector Algorithm.
	SOR Vector	Handles settings for the sparse localized Schur solver. Add it to Domain Decomposition>Schur Solver nodes.
	State	Handles settings for state variables. A state is composed of a set of ODE variables. Used together with the Dependent Variables operation node.
	Stationary Acceleration	Accelerates the solution process for nonlinear problems with a time-periodic stationary solution.
	Stop Condition	An attribute that stops parameter stepping or time stepping when a specified condition is fulfilled.
	Time Parametricc	Handles settings for parameter stepping. This attribute can be used together with the Time-Dependent Solver.
	Vanka	Handles settings for a Vanka linear solver or preconditioner. Also see The Vanka Algorithm.

Advanced in the *COMSOL Multiphysics Programming Reference Manual*

WHICH PROBLEMS ARE SYMMETRIC?

When using an Advanced attribute node, you have an option to choose the matrix symmetry. But how do you know which problems are symmetric? When the discretization of a PDE problem results in a symmetric Jacobian (stiffness) matrix (and a symmetric mass matrix for time-dependent or eigenvalue problems), you can often apply faster and less memory-consuming algorithms to solve the resulting linear systems. PDEs with symmetric discretization typically occur in models involving acoustics, diffusion, electromagnetics, heat transfer by conduction, and structural mechanics. In contrast, problems in fluid mechanics, convection-diffusion, and convection-conduction typically involve nonsymmetric Jacobian matrices.

If the model involves complex numbers, you can distinguish between *symmetric* and Hermitian matrices. A *Hermitian matrix* A satisfies

$$\bar{A}^T = A$$

where T denotes the transpose and the bar denotes the complex conjugate.

COMSOL Multiphysics detects symmetry for symmetric and Hermitian matrices. To take advantage of the computational savings for models with symmetric matrices is to use a solver that utilizes the symmetry. The following linear system solvers and preconditioners do not take advantage of symmetric matrices:

- The Vanka preconditioner
- The incomplete LU preconditioner
- The algebraic multigrid solver/preconditioner

Selecting **Symmetric** for a problem that does not result in symmetric matrices leads to an incorrect solution.

ELIMINATION CONSTRAINT HANDLING

The constraint handling is, for simplicity, demonstrated for a stationary problem. The handling is similar for parametric, eigenvalue, and time-dependent problems. Consider the linear (scaled) algebraic system

$$\begin{bmatrix} K & N_F \\ N & 0 \end{bmatrix} \begin{bmatrix} U \\ \Lambda \end{bmatrix} = \begin{bmatrix} L \\ M \end{bmatrix}$$

The Lagrange multiplier vector Λ is typically undetermined, and COMSOL Multiphysics does not solve for it. Similarly, the constraint $NU = M$ often contains the same equation several times. To handle this problem, the COMSOL software turns to a constraint-handling method that uses elimination. The solver computes a solution U_d to the constraint $NU = M$ as well as a matrix Null, whose columns form a basis for the null space of N. For unidirectional constraints ($N_F \neq N^T$) a matrix Nullf is also computed, whose columns form a basis for the null space of $N_F{}^T$. Then it obtains the solution as $U = \text{Null}\ U_n + U_d$. Here U_n is the solution of $K_c\ U_n = L_c$, where

$$\begin{cases} K_c = \text{Nullf}^T K\,\text{Null} \\ L_c = \text{Nullf}^T (L - KU_d) \end{cases}$$

Here K_c is the eliminated stiffness matrix.

For eigenvalue and time-dependent problems, the corresponding eliminated D and E matrices are

$$D_c = \text{Null}^T D \text{Null}, \qquad E_c = \text{Null}^T E \text{Null}$$

Choosing the Right Linear System Solver

The following pertains to the Direct attribute node. All linear system solvers above work on general sparse linear systems of the form $Ax = b$ and use LU factorization on the matrix A to compute the solution x. In doing so, they use a preordering algorithm that permutes the columns of A to minimize the number of nonzeros in the L and U factors. Popular preordering algorithms include Minimum degree, Nested dissection, and Multisection. The MUMPS and SPOOLES solvers run distributed when running COMSOL Multiphysics in distributed mode (on clusters, for example). All linear system solvers benefit from shared memory parallelism (multicore processors, for example); however, MUMPS do so to a slightly lesser extent than PARDISO and SPOOLES. MUMPS and PARDISO have an option for reusing the preordering, which speeds up the computation but leads to a higher memory peak.

This section reviews Linear System Solver Selection Guidelines, Which Models Are Positive Definite?, and Elliptic and Parabolic Models.

Linear in the *COMSOL Multiphysics Programming Reference Manual.*

The MUMPS Solver

The MUMPS solver works on general systems of the form $Ax = b$ and uses several preordering algorithms to permute the columns and thereby minimize the fill-in. MUMPS is multithreaded on platforms that support multithreading and also supports solving on distributed memory architectures through the use of MPI. The code is written in Fortran 90. For further details about MUMPS, see Ref. 1.

The PARDISO Solver

The PARDISO solver works on general systems of the form $Ax = b$. In order to improve sequential and parallel sparse numerical factorization performance, the solver algorithms are based on a Level-3 BLAS update, and they exploit pipelining parallelism with a combination of left-looking and right-looking supernode techniques. PARDISO is multithreaded on platforms that support multithreading. On distributed memory architectures, if you clear the **Parallel Direct Sparse Solver for Clusters** check box or if you run PARDISO in the out-of-core mode, the solver settings are changed to corresponding MUMPS settings. The code is written in C and Fortran. COMSOL Multiphysics uses the PARDISO version developed by Olaf Schenk and collaborators (Ref. 3), which is included with Intel® MKL (Intel Math Kernel Libraries).

The SPOOLES Solver

The SPOOLES solver works on general systems of the form $Ax = b$ using the multifrontal method and direct LU factorization of the sparse matrix A. When the matrix A is symmetric or Hermitian, the solver uses an LDLT version of the algorithm, which saves half the memory. SPOOLES uses several preordering algorithms to permute the columns and thereby minimize fill-in. SPOOLES is multithreaded on platforms that support multithreading and also supports solving on distributed memory architectures through the use of MPI. The code is written in C. COMSOL uses SPOOLES version 2.2 developed by Cleve Ashcraft and collaborators (Ref. 2).

The Dense Matrix Solver

The dense matrix solver works on general systems of the form $Ax = b$. The dense matrix solver uses LAPACK (Ref. 4) for multithreaded solves and ScaLAPACK (Ref. 5) for distributed memory architectures. This solver is mainly useful for cases where the system matrices are densely populated, such as boundary element (BEM) models.

LINEAR SYSTEM SOLVER SELECTION GUIDELINES

The physics interface in the model selects a default linear system solver that usually is appropriate for the problem type, at least for single physics interface models. If the default solver does not perform well, use the following guidelines to choose a linear system solver.

1. Try the PARDISO direct solver.
2. Try the MUMPS direct solver.
3. If the solver still runs out of memory or is too slow, use one of the iterative solvers GMRES, FGMRES, BiCGStab, or TFQMR. Select a preconditioner according to the guidelines in the section about the iterative solver.
4. If the system is positive definite and real symmetric or Hermitian, try the conjugate gradients iterative solver, which is more memory-efficient and sometimes faster than GMRES, FGMRES, BiCGStab, and TFQMR. Select a symmetric preconditioner. Alternatively, try the SPOOLES direct solver. It often uses less memory but is less numerically stable. SPOOLES is also slower.

WHICH MODELS ARE POSITIVE DEFINITE?

A model with a real symmetric or Hermitian system matrix is often also *positive definite*, which means that a number of efficient linear system solvers are applicable. Further, the simple preconditioners SSOR, SOR, SORU, Jacobi (diagonal scaling), and the multigrid solvers benefit from a positive definite matrix. A real symmetric or Hermitian matrix is positive definite if all its eigenvalues are positive.

For stationary problems, the system matrix is the Jacobian (stiffness) matrix A. This means that stationary models in diffusion, electromagnetics, heat transfer by conduction, and structural mechanics usually have a positive definite system matrix.

For time-dependent problems, the system matrix is of the form $A + \sigma B + \sigma^2 C$, where B is the damping matrix, C is the mass matrix, and $\sigma > 0$ is inversely proportional to the time step (if $C = 0$, then B is often called the mass matrix). Because these matrices are often positive definite, time-dependent models in diffusion, electromagnetics, structural mechanics, and heat transfer by conduction usually have a positive definite system matrix.

For eigenvalue problems, the system matrix is of the form $A - \sigma B + \sigma^2 C$, where σ is the *shift* — that is, the number around which the software searches for eigenvalues (specified in the **Search for eigenvalues around** field; the default is 0). Because A, B, and C are usually positive definite, eigenvalue problems in acoustics, diffusion, electromagnetics, heat transfer by conduction, and structural mechanics usually have a positive definite system matrix if $\sigma \leq 0$.

ELLIPTIC AND PARABOLIC MODELS

The classes of elliptic and parabolic models include the positive definite models. For such models, the efficient multigrid preconditioners often perform well. A simplified definition of these classes reads as follows. A system of stationary or eigenvalue second-order PDEs is *elliptic* if the second-order terms in the PDE give rise to a positive definite Jacobian matrix. A system of time-dependent PDEs has a time derivative term of the form $d_a \dot{u}$, where the mass coefficient d_a is often a positive definite matrix and the e_a coefficient is 0. Such a system is *parabolic* if the second-order terms in the PDE give rise to a positive definite Jacobian matrix.

Stationary or eigenvalue models in acoustics, convection-diffusion, electromagnetics, heat transfer, and structural mechanics are usually elliptic. Likewise, time-dependent models in convection-diffusion, electromagnetics, and

heat transfer are often parabolic. The Navier-Stokes equations, wave-type equations, or formulations involving weak constraints are neither elliptic nor parabolic.

About Incomplete LU

The Incomplete LU preconditioner performs an incomplete LU factorization of the system matrix A. That is, it drops small elements during the column-oriented Gaussian elimination (see Ref. 16 and Ref. 17). Thus it saves memory, and the resulting factors L and U are approximate. The resulting preconditioner is an approximation to A. The preconditioner supports threshold drop, fill-ratio drop, and threshold pivoting. It can optionally respect the nonzero pattern in the original matrix. The preconditioner accepts matrices in symmetric and Hermitian format but expands these to full storage before factorization.

SELECTING A DROP RULE

The Incomplete LU preconditioner uses the *threshold drop rule* (the default) or the *fill-ratio drop rule*. The preconditioner drops (neglects) an element during the elimination phase if its absolute value is smaller than the Euclidean norm of the entire column times a *drop tolerance*. In contrast, the fill-ratio drop rule limits the number of nonzeros in the incomplete factors L and U, and it keeps the largest absolute values. The number of values it keeps depends on the number of nonzeros in the corresponding column of the original matrix times a fill-ratio factor. There are two exceptions to these drop rules:

- The preconditioner never drops diagonal elements.
- The preconditioner optionally drops nonzeros in positions where the original matrix is nonzero. To make the preconditioner drop them, clear the **Respect pattern** check box in the settings for the Incomplete LU preconditioner.

The primary problem with setting up a preconditioner is the tradeoff between resources (computer time and memory) and the preconditioner's quality. The computational cost of setting up a preconditioner with the Incomplete LU preconditioner is at least proportional to the number of nonzeros in the produced factors L and U. An advantage of using the fill-ratio drop rule is that you can estimate and limit the cost beforehand; the main disadvantage is that the quality of the preconditioner is typically not as good as using the threshold drop rule with a drop tolerance resulting in the same number of nonzeros. However, with the threshold drop rule there is no good way of estimating resource requirements beforehand. Furthermore, there is no general formula for these drop rules that gives a drop tolerance or fill ratio that guarantees fast convergence for a certain iterative method. Therefore it is often necessary to rely on experiments and experience for this difficult and, from a performance point of view, important choice.

The Adaptive Mesh Refinement Solver

The Adaptive Mesh Refinement solver algorithm and Error Estimates for the Time-Dependent Solver, The L_2 Norm Error Estimate, and The Functional Error Estimate are discussed in this section.

	Adaption in the *COMSOL Multiphysics Programming Reference Manual*.

THE ADAPTIVE SOLVER ALGORITHM

The adaptive solver performs the following iterative algorithm (Ref. 14):

1. Solve the problem on the existing mesh using the stationary or eigenvalue solver.
2. Evaluate the residual of the PDE on all mesh elements.

3. Estimate the error in the solution on all mesh elements. The computed error estimate is really an *error indicator* because the estimate involves an unknown constant (C above).
4. Terminate execution if it has made the requested number of refinements or if it has exceeded the maximum number of elements.
5. Refine a subset of the elements based on the sizes of the local error indicators.
6. Repeat these steps.

Time-Dependent Adaptation

An adapted solution at $t = t_n$ is mapped to the coarse base mesh. A new adapted mesh for the time interval $[t_n, t_{n+1}]$ is constructed by first computing a coarse solution on the base mesh in $[t_n, t_s]$, where t_s is the largest sample time and $t_{n+1} = 2t_n - t_{n-1}$. The error indicator is evaluated using the coarse solution at the given sample points.

In the case of an automatic time interval, a measure of the amount of refinement is computed and compared to a given requested value. If the computed value is too small or too large, the interval length is increased or decreased, respectively, which results in a new t_{n+1}. If the interval length need to be changed the error indicator is sampled again using a new coarse solution. The comparison is done only once.

The new adapted mesh is obtained by using the error indicator sampled at given points in $[t_n, t_{n+1}]$, selecting a set of elements based on the element pick function, and then finally refining these elements. The solution at t_n to the PDE problem on the previous adapted mesh for $[t_{n-1}, t_n]$ is then mapped to the new mesh for $[t_n, t_{n+1}]$ and time integration continues until the next mesh adaptation takes place at t_{n+1}.

The simple measure used for determining the amount of refinement is

$$\rho = \frac{1}{2^p N} \sum_{i = 1,\, \gamma(i) \neq 0}^{N} 2^{\gamma(i)}$$

Here γ is an N-vector of integers containing the number of times the element at that position should be refined, $p = \max_i \gamma(i)$, and N is the number of elements of the coarse base mesh.

Now, the next interval length is decreased by a given factor if ρ is larger than 120% of the requested reference value. If ρ is smaller than 80% of the reference value it is instead increased. Otherwise the interval length is kept the same.

	Adaptive mesh refinement works with the mesh and equations defined in the domains (interior) of the geometry and does not consider meshes and equations on lower dimensions, such as surface meshes in shell models. In solid geometries, the adaptive mesh refinement of the interior mesh usually affects the surface mesh.

ERROR ESTIMATES

Error Estimates for the Time-Dependent Solver

A possible error indicator is the L_2 norm of the gradient of the dependent variables (for example, `sqrt(comp1.Tx^2+comp1.Ty^2)` for the temperature in a 2D heat transfer model). The gradient of the dependent variable is the default value for the error indicator in most physics interfaces.

A solution on the coarse base mesh is computed in the next time interval, and the error indicator is evaluated at the points specified in the **Sample points** field. In this way a new adapted mesh appropriate for the next time interval can be generated. The sample points must be specified as a number between 0 and 1 because they are interpreted as being relative to the time interval under consideration. Entering a scalar value of 0.5 means that the error indicator is evaluated at the midpoint of the interval. The default value is `range(0.0,0.1,1.0)`, which gives 11 sample points from 0 to 1.

The L_2 Norm Error Estimate

The L_2 norm error estimate relies on an assumption of a strong stability estimate for the PDE problem (satisfied, for example, for Poisson's equation over a domain with a smooth boundary). From such an assumption, it is possible to show that there is a constant C, such that the L_2 norm of the error, e_l, in the lth equation satisfies

$$\|e_l\| \le C\left\|h^{q_l}\rho_l\right\|$$

where ρ_l is the residual in the lth equation and q_l is the stability estimate derivative order. h is the local mesh element size. The adaptive solver algorithm uses the following L_2-norm error indicator:

$$\left(\int_\Omega \sum_l s_l^{-2} h^{2q_l} |\rho_l|^2 dA\right)^{\frac{1}{2}}$$

with the default value $q_l = 2$. This formula also introduces the scaling factors s_l for the residual with the default value $s_l = 1$.The local error indicator for a mesh element is

$$\sum_l s_l^{-2} h^{2q_l} \tau_l^2 A$$

where A is the area (volume, length) of the mesh element, and τ_l is the absolute value of the lth equation residual (one number per mesh element).

The Functional Error Estimate

The functional-based estimate relies on adjoint solution error estimation. Instead of approximating the error of the solution, the adaptive solver uses the approximation of the error of a certain error functional (Ref. 16). Under rather general assumptions, it is possible to show that the error e (of a functional) can be estimated as

$$|e| \le \sum_l \|e_l^*\| \|\rho_l\|$$

where e_l^* and ρ_l are the error in the dual or adjoint solution to, and the residual for, the lth equation, respectively. The adaptive solver algorithm uses the following error indicator for a mesh element:

$$\sum_l w_l \tau_l A$$

where A is the area (volume, length) of the mesh element, and τ_l is the absolute value of the lth equation residual (one number per mesh element). Here w_l is an estimate of the adjoint solution error for the lth equation. This error is estimated in one of two ways. For both methods, the sensitivity solver finds the discrete adjoint solution. If only Lagrange element shape functions are used, the solver uses the *ppr* technique to compute w_l as an element average of $|\mathrm{pprint}(u_l^*) - u_l^*|$. Here u_l^* is the current computed adjoint solution for the lth equation. If not only Lagrange-element shape functions are used, then $w_l = hD_l$ where D_l is an element average of $\left|\nabla u_l^*\right|$. The global error printed in the solver log is the sum of the error indicator for all mesh elements. See also Error Estimation — Theory and Variables.

The Domain Decomposition Solvers

The Domain Decomposition (Schwarz) and Domain Decomposition (Schur) solvers or preconditioners are memory-efficient iterative algorithms for large problems where other methods are infeasible. The basic idea of an iterative (spatial) domain decomposition is as follows.

Consider an elliptic PDE over a domain D and a partition $\{D_i\}$ such that

$$D = \bigcup_i D_i$$

Instead of solving the PDE on the entire D at once, the algorithm solves a number of subdomain problems for each subdomain D_i. If the subdomain D_i is adjacent to a boundary, its boundary conditions are used. On the interfaces between subdomains, certain natural transmission conditions arise. It is known (Ref. 22) that the solution to the set of subdomain problems is equivalent to the original problem formulated over D. The solution can be found by iteratively solving each subdomain problem with all other domains fixed until the convergence criteria is met. This principle is used in domain decomposition methods.

Three different kinds of boundary conditions are typically applied on the interfaces between subdomains: Dirichlet, zero flux, and absorbing boundary conditions. These correspond to enforcing the solution as follows:

- Dirichlet: the value of the unknown.
- Zero flux: the derivative of the unknown in the direction normal to the boundary.
- Absorbing: a combination of Zero flux, Dirichlet (zero-order term), and the Laplacian of the unknown (second-order term).

For wave problems, absorbing boundary conditions on subdomains interfaces usually result in the best convergence of the Domain Decomposition algorithm.

THE OVERLAPPING SCHWARZ METHOD

One class of methods is the *overlapping Schwarz method*, where the partition $\{D_i\}$ grows such that each subdomain overlaps its neighboring domains. The size of the overlap is an important parameter that partly determines the convergence rate of the method. An optional coarse grid problem can also be solved that improves the convergence rate of the method. The coarse grid problem, which is solved on the entire D, gives an estimate of the solution on the fine grid on D. The convergence rate of the method depends on the ratio between the size of the coarse grid mesh elements and the physical size of the overlap on the fine grid.

Two practical properties of this method are:

- Control of maximum memory consumption independent of problem formulation: Only a small part of the problem needs to be discretized and solved for at once.
- Coarse-grained concurrency: Disjoint problems can be solved concurrently on different cluster nodes.

The domain decomposition method can be used to control the memory consumption. This is achieved in two ways. The total amount of data needed to solve the subdomain problems is usually less than the data needed to solve the entire problem on the domain D. It is also possible to run the domain decomposition solver in a mode where the data used by each subdomain problem is computed on the fly. This results in a significant memory reduction and allows the solution of larger problems without the need to store the data in virtual memory at the price of reduced performance compared to keeping all data in physical memory. This method is useful when the problem would use virtual memory otherwise.

There is a choice between four overlapping Schwarz methods: the additive, multiplicative, hybrid, and symmetric Schwarz methods. The *additive method* solves all subdomain problems and the coarse grid problem at once before updating the solutions. The *hybrid method* updates the solution when the coarse grid problem is solved and then solves the remaining problems, updates the solution, and solves the coarse grid problem a second time. These methods can solve all the subdomain problems in parallel when running in distributed mode. The *multiplicative method* solves each subdomain problem in sequence. The *symmetric method* also solves the subdomain problems in sequence but in a symmetric way. In these cases, not all problems can be solved in parallel when running in distributed mode, but using coloring techniques it is still possible to achieve parallel speedup. In general, the multiplicative and symmetric methods converge faster than the additive and hybrid methods, while the additive and hybrid methods can result in better speedup.

THE SCHUR COMPLEMENT METHOD

Another class of methods is the *Schur complement methods* where the partitions of D are nonoverlapping and separated by a boundary domain S. If the solution to the boundary domain S is known, the solution for all domains are trivially computed by inverting the local system matrices of each domain. The solution to the boundary domain is computed by inverting the Schur complement matrix. Because the Schur complement matrix in general is dense, an approximate method is used to compute the inverse. One such method is to use a Schwarz method as a preconditioner for the solution of the Schur complement system. The local systems that corresponds to the subdomain problems in the overlapping Schwarz method can either be inverted in full by using the Localized Schur solver or approximately inverted by using the Sparse Localized Schur solver that filters small entries in the local matrix. See also Ref. 23 and Ref. 24.

You can choose from an *additive Schur ordering* or a *multiplicative Schur ordering*. These ordering options determine which corresponding Schwarz algorithm (see The Overlapping Schwarz Method above) to use for solving the Schur complement system.

SCHWARZ VS. SCHUR METHODS

The Schur complements method is typically more stable than the Schwarz overlapping method but also requires more computational work for each iteration. The recommendation is therefore to try the Schwarz overlapping method and then the Schur complements method. The Schwarz overlapping method is also more memory lean than the Schur complements method.

THE COMPLEX SHIFTED LAPLACE CONTRIBUTION

The convergence of the Domain Decomposition (Schwarz) method can be improved by adding a complex shifted Laplace (CSL) contribution — that is, a purely complex term that has the effect of damping oscillations in the solution. CSL is typically applied to wave problems at high frequency. Its effect is limited to the preconditioner and the convergence rate, and it can be applied independently both on the fine and on the coarse grid levels. CSL does not change the original system matrix and the final solution. The CSL contribution is a function of the wave number of the problem and is generally multiplied by a relaxation factor $O(1)$. The choice of the relaxation factor is a trade-off between no damping (0) and large damping but deterioration of the preconditioner performance (large values).

The Fully Coupled Attribute and the Double Dogleg Method

For the Fully Coupled attribute, you can define one of the settings for the double dogleg method. Also see Termination Criterion for the Fully Coupled and Segregated Attribute Nodes.

	FullyCoupled and Segregated in the *COMSOL Multiphysics Programming Reference Manual*.

THE DOUBLE DOGLEG METHOD

The double dogleg method (Ref. 25) is available for stationary problems. It is a Newton trust region method and can as such adjust the direction as well as the step length when solving the nonlinear equation $F(u) = 0$, $F: R^n \rightarrow R^n$.

In order to apply the double dogleg method, consider the minimization of the quadratic model

$$m_k(u_k + s) = \frac{1}{2}\|F_k + F'_k s\|^2 = \frac{1}{2}F_k^T F_k + (F'^T_k F_k)^T s + \frac{1}{2}s^T F'^T_k F'_k s$$

subject to $\|s\| \le \delta_k$. Here, F'_k is the Jacobian of F at the current point u_k, $F_k = F(u_k)$, and the size of the double dogleg step s is required to be bounded by the current trust region radius δ_k. Both the Cauchy point — that is,

the minimizer of m in the steepest descent direction — and the Newton point are utilized by the double dogleg method. If the Newton step size is smaller than the trust region radius, the full Newton step is taken. Otherwise, the method considers both the Newton direction and the steepest descent direction and calculates a step with size equal to the current trust region radius. A damped Newton step is calculated, and if the size of this step is smaller than the trust region radius then the double dogleg step is in the Newton direction, else if the size of the Cauchy step is larger than the trust region radius, the double dogleg step is taken in the steepest descent direction. Otherwise, a convex combination of the Cauchy step and the Newton step is calculated such that the resulting double dogleg step size is equal to the trust region radius. In each iteration, the algorithm dynamically adjusts the size of the trust region depending on the predicted decrease of m compared to the actual one. For further details, see Ref. 25. For difficult problems, you can choose to start the computation by a damped Newton step. Enter the damping factor between 0 and 1 in the **Initial damping factor** field. The algorithm terminates if the norm of the scaled residual is less than the given tolerance, $\|SF_k\| \leq \text{tol}$. You can choose the type of scaling in the **Residual scaling** list. See the Fully Coupled **Method and Termination** settings.

The Iterative Solvers

The following section provides more detailed information about the Iterative solver types: GMRES, FGMRES, Conjugate Gradients, BiCGStab, and TFQMR.

It also discusses the Convergence Criteria for Iterative Solvers and Selecting a Preconditioner for an Iterative Linear System Solver.

	Linear in the *COMSOL Multiphysics Programming Reference Manual*.

ITERATIVE SOLVER TYPES

The following information also applies to the Krylov Preconditioner attribute.

	These solvers can roughly be ordered according to their memory usage and computational time per iteration (with least memory and time first): Conjugate gradients, BiCGStab, TFQMR, GMRES, and then FGMRES. The solvers that require less memory and computational time per iteration typically are less robust and not applicable to all problem types.

GMRES Iterative Solver

This linear system solver uses the restarted GMRES (generalized minimum residual) method (see Ref. 9 and Ref. 10). This is an iterative method for general linear systems of the form $Ax = b$. For fast convergence it is important to use an appropriate *preconditioner*.

FGMRES Iterative Solver

This solver uses the restarted FGMRES (flexible generalized minimum residual) method (Ref. 12). The solver is a variant of the GMRES solver that can handle a wider class of preconditioners in a robust way. You can, for example, use any iterative solver as preconditioner for FGMRES. The downside with the method is that it uses twice as much memory as GMRES for the same number of iterations before restart. FGMRES uses right preconditioning and therefore has the same convergence criterion as right-preconditioned GMRES. If FGMRES is used together with a constant preconditioner such as the Incomplete LU preconditioner, then the FGMRES solver is identical to the right preconditioned GMRES solver.

Conjugate Gradients Iterative Solver

This solver uses the conjugate gradients iterative method (Ref. 9, Ref. 13, and Ref. 14). It is an iterative method for linear systems of the form $Ax = b$ where the matrix A is positive definite and (Hermitian) symmetric. Sometimes

the solver also works when the matrix is not positive definite, especially if it is close to positive definite. This solver uses less memory and is often faster than the GMRES solver, but it applies to a restricted set of models.

For fast convergence it is important to use an appropriate *preconditioner*, which should be positive definite and (Hermitian) symmetric.

BiCGStab Iterative Solver

This solver uses the *biconjugate gradient stabilized* iterative method (Ref. 9 and Ref. 15) for solving general linear systems of the form $Ax = b$. The required memory and the computational time for one iteration with BiCGStab is constant; that is, the time and memory requirements do not increase with the number of iterations as they do for GMRES. BiCGStab uses approximately the same amount of memory as GMRES uses for two iterations. Therefore, BiCGStab typically uses less memory than GMRES.

The convergence behavior of BiCGStab is often more irregular than that of GMRES. Intermediate residuals can even be orders of magnitude larger than the initial residual, which can affect the numerical accuracy as well as the rate of convergence. If the algorithm detects poor accuracy in the residual or the risk of stagnation, it restarts the iterations with the current solution as the initial guess.

In contrast to GMRES and conjugate gradients, BiCGStab uses two matrix-vector multiplications each iteration. This also requires two preconditioning steps in each iteration. Also, when using the left-preconditioned BiCGStab, an additional preconditioning step is required each iteration. That is, left-preconditioned BiCGStab requires a total of three preconditioning steps in each iteration.

TFQMR Iterative Solver

This solver uses the *transpose-free quasi-minimal residual* iterative method (Ref. 27 and Ref. 28) for solving general linear systems of the form $Ax = b$. The required memory and the computational time for one iteration with TFQMR is constant; that is, the time and memory requirements do not increase with the number of iterations as they do for GMRES. TFQMR uses approximately the same amount of memory as GMRES uses for two iterations. Therefore, TFQMR typically uses less memory than GMRES.

TFQMR is more stable than BiCGStab because it performs a minimization. It is therefore often a better alternative than BiCGStab. The convergence behavior of TFQMR is often more regular than BiCGStab but slower than GMRES. Sometimes the underlying algorithm can break down. When the algorithm detects this, it restarts the iterations with the current solution as the initial guess.

In contrast to GMRES and conjugate gradients, TFQMR uses two matrix-vector multiplications each iteration. This also requires two preconditioning steps in each iteration.

CONVERGENCE CRITERIA FOR ITERATIVE SOLVERS

When you use an iterative solver, COMSOL Multiphysics estimates the error of the solution while solving. Once the error estimate is small enough, as determined by the convergence criterion

$$\rho\left|M^{-1}(b - Ax)\right| < \mathrm{tol} \cdot \left|M^{-1}b\right| \tag{20-16}$$

the software terminates the computations and returns a solution. When you use a direct solver, COMSOL Multiphysics can optionally make a check to determine if the above convergence criterion is fulfilled after the solution step. If the error criterion is not met, the solution process is stopped and an error message is given.

The definitions of M for the various solvers are:

- For MUMPS, PARDISO, and SPOOLES, $M = LU$, where L and U are the LU factors computed by the solver.
- When using left-preconditioning with the iterative solvers GMRES, conjugate gradients, BiCGStab, and TFQMR, M is the preconditioner matrix.
- For the remaining iterative solvers, M is the identity matrix.

The convergence criterion in Equation 20-9 states that the iterations terminate when the relative (preconditioned) residual times the factor ρ is less than a tolerance tol. For solvers where M is equal to the identity matrix, the iterations can sometimes terminate too early with an incorrect solution if the system matrix A is ill-conditioned. For solvers where M is not equal to the identity matrix, the iterations can sometimes terminate too early if M is a poor preconditioner. If the iterations terminate too early due to an ill-conditioned system matrix or a poor preconditioner, increase the factor ρ to a number of the order of the condition number for the matrix $M^{-1}A$. If ρ is greater than the condition number for the matrix $M^{-1}A$, the convergence criterion implies that the relative error is less than tol: $|x - A^{-1}b| < \text{tol} \cdot |A^{-1}b|$.

SELECTING A PRECONDITIONER FOR AN ITERATIVE LINEAR SYSTEM SOLVER

When using an Iterative linear system solver, you must select a preconditioner. The choice of preconditioner affects the number of iterations and the solver's eventual convergence. Preconditioning can consume more time and memory than the actual iterative solver itself. To choose a preconditioner, right-click the **Iterative** node and choose one of the following preconditioners from the context menu:

TABLE 20-7: SELECTING A PRECONDITIONER

PRECONDITIONER	USAGE
GENERAL FRAMEWORK	
Multigrid — Geometric multigrid	For elliptic or parabolic systems.
Multigrid — Algebraic multigrid and smoothed aggregation AMG	For scalar problems or loosely coupled multiphysics problems of the elliptic or parabolic type.
Domain Decomposition (Schwarz)	For large problems in a distributed-memory system or as an alternative to a direct solver.
Krylov Preconditioner	For Helmholtz problems where the mesh does not fulfill the Nyquist criteria. It can be used on the coarse multigrid level or as a smoother.
FULL OR APPROXIMATE FACTORIZATION OR APPROXIMATE INVERSE	
Incomplete LU	For nonsymmetric systems (the default preconditioner).
Sparse Approximate Inverse (SAI)	For BEM methods and as a general preconditioner or smoother. It has a costly setup phase but typically shows a good parallel scalability.
Direct Preconditioner	For small fields (an ODE, for example), where a direct solver is efficient.
POINTWISE GENERAL PURPOSE	
SOR	For elliptic problems without zeros on the diagonal. Typically better than Jacobi and still rather inexpensive.
Jacobi (diagonal scaling)	For large positive definite models.
BLOCK GAUSS-SEIDEL GENERAL PURPOSE	
SCGS	For fluid-flow problems with linear elements.
SOR Line	For the same problem class as for SOR but adopted to stretched/anisotropic meshes (for example, boundary layer meshes). More expensive than SOR.
Vanka	For large indefinite problems with zeros on the diagonal of the system matrix.
VECTOR ELEMENT METHODS	
Auxiliary-Space Maxwell (AMS)	For curl-curl problems stemming from stationary or time-dependent Maxwell's equations.
SOR Gauge	For ungauged vector element formulations of Magnetostatics.
SOR Vector	For large electromagnetics models using vector elements.

Each preconditioner has its own settings; to adjust them, select the preconditioner node to open its **Settings** window. If you want to solve a model without a preconditioner, disable all preconditioner nodes. Normally, only one preconditioner can be active, and if you have more than one preconditioner node, an active preconditioner

node becomes disabled if you enable another preconditioner. You can use multiple preconditioners in a hybrid preconditioner approach; see Hybrid Preconditioners. It is also possible to run the iterative solver without a preconditioner by not adding any preconditioner or disabling all of them.

The Incomplete LU preconditioner, which is the default preconditioner, works in a more general context than the others, but it might be impractical because of its time and memory requirements; when they work, the multigrid preconditioners are always preferable. The SOR and Jacobi diagonal-scaling preconditioners use less time and memory but only ensure convergence of the iterative solver for positive definite problems. Problems with zeros on the diagonal are efficiently preconditioned with the Vanka preconditioner. To precondition electromagnetic problems that use vector elements for a PDE containing the curl-curl operator, use the SOR Vector preconditioner.

For details about the individual preconditioners, follow the links in the table above.

Preconditioner Selection Guidelines

The physics interface selects a default preconditioner that is usually appropriate for the problem type, at least for single physics interface models. If the default does not perform well, select another one using the following guidelines:

- If the system is elliptic or parabolic (see Elliptic and Parabolic Models) use the geometric multigrid preconditioner.
- If you solve a fluid-flow problem with linear elements only, try the SCGS preconditioner. This is the default setting for most fluid flow physics interfaces.
- If you solve an indefinite problem with zeros on the diagonal of the system matrix, such as the Navier-Stokes equations, try the Vanka preconditioner or the geometric multigrid preconditioner with Vanka or Incomplete LU as the smoother. With appropriate stabilization, it is possible in many cases to use SOR or SOR Line as a GMG pre- and postsmoother instead of Vanka, which increases performance. This is the default setting in some fluid-flow interfaces.
- If the system is positive definite but so large that the other preconditioners run out of memory, try the SOR Vector as smoother.
- If you solve an electromagnetics problem using vector elements for a PDE containing the curl-curl operator, try the geometric multigrid preconditioner with the SOR vector presmoother and the SOR vector postsmoother, or try the SOR vector preconditioner. Alternatively, if the problem is real-valued stationary or time dependent, you can try the geometric multigrid (GMG) preconditioner with the SOR presmoother and the SOR postsmoother, and AMS as the coarse solver. AMS is designed for the lowest-order vector elements. For higher-order discretizations, use GMG with the option **Lower element order first** and sufficiently number of levels such that AMS could be used efficiently as a coarse solver.
- Try the Incomplete LU preconditioner, which works for all linear systems. However, it requires the tuning of the drop tolerance (or fill ratio); it can run out of memory, and in many cases it is not the most efficient preconditioner.
- If the system is elliptic or parabolic and the system is a real-valued PDE for a single solution component (that is, a scalar problem) you can alternatively try the algebraic multigrid preconditioner.
- As an alternative to the multigrid solver and the use of a direct solver, the Domain Decomposition (Schwarz) solver can be a memory efficient alternative and is a scalable solver well suited for use in a distributed memory system. The Domain Decomposition (Schur) is a typically more stable but less memory efficient alternative to the Domain Decomposition (Schwarz) solver.
- When you are solving a problem on a parallel computer (shared or distributed memory), you can try the SAI preconditioner or smoother due to its scalability properties.
- For small models, or as part of a hybrid preconditioner for a multiphysics model that contains a small field (such as an ODE), you can use the Direct preconditioner.

The Incomplete LU preconditioner and sometimes the multigrid preconditioners require some tuning to get fast convergence without running out of memory (see the sections about these preconditioners).

About the Relaxation Factor

The *relaxation factor* ω to some extent controls the stability and convergence properties of a numerical solver by shifting its eigenvalue spectrum. The optimal value for the relaxation factor can improve convergence significantly — for example, for SOR when used as a solver. However, the optimal choice is typically a subtle task with arbitrary complexity. For preconditioners and smoothers, a sophisticated choice of the relaxation factor is less important. A value $\omega < 1$ (under-relaxation) diminishes the impact of the smoother or preconditioner by limiting the possible modification in the variable update. There is a tradeoff between stability (a small value of ω) and quick advancement in the iterative process (ω close to 1). Some smoothers for multigrid require $\omega < 1$, but the typical default value is 1. Over-relaxation — that is, $1 < \omega < 2$ — might have some benefits in special situations.

HYBRID PRECONDITIONERS

For all preconditioners, you can combine the effect of multiple preconditioners, either as a preconditioner or as smoothers, coarse solvers, or domain solvers. Such hybrid preconditioners can be useful in several cases. For instance, if you need to solve a combined multiphysics problem, you can apply the appropriate smoother to each physics interface and use the combined effect in a multigrid solver, or if the physics interface requires different types of multigrid hierarchies, you can use one multigrid hierarchy for each physics interface as a preconditioner.

You activate hybrid preconditioners in the **Hybridization** section, which is available in all preconditioner node's **Settings** windows.

Hybridization

Select the type of preconditioner from the **Use as** list: Select **Single preconditioner** (the default) to use the preconditioner as a single preconditioner for the solver. Select **Multi preconditioner** to make it possible to create a sequence of preconditioners. The hybrid preconditioner sequence is defined by all enabled preconditioner steps for the solver. For each preconditioner you can select the variables to apply the preconditioner to from the **Preconditioner variables** list. For models where some dependent variables represent vector fields, you can also select individual components from the **Preconditioner components** list. Select **All** (the default), or select **Manual** to choose from all solution components in the **Preconditioner selection** list. The selection in the **Preconditioner selection** list overrides the selection in the **Preconditioner variables** list.

The Multigrid Solvers

The different Multigrid solvers types — geometric multigrid (GMG) and algebraic multigrid (AMG) solvers— are discussed in this section as well as the multigrid algorithm.

THE GEOMETRIC MULTIGRID SOLVER/PRECONDITIONER

The geometric multigrid solver uses a hierarchy of *multigrid levels* where each level corresponds to a mesh and a choice of shape functions. Thus, in addition to coarsening the mesh, it is possible to construct a new "coarser" level by lowering the order of the shape functions. The number of degrees of freedom decreases when you go to a coarser multigrid level. The meshes for the different levels can be constructed manually or automatically. The automatic options use a coarsening algorithm to the fine mesh, which leads to meshes that are not aligned to each other. There is also an option to generate the finer meshes from the coarsest mesh by successive mesh refinements, which leads to aligned (nested) meshes. The manual option can be useful when you have a quadrilateral, hexahedral, or prism mesh, or when you for some other reason want to control details in the meshes.

The geometric multigrid (GMG) solver or preconditioner is a fast and memory-efficient iterative method for elliptic and parabolic models. It performs one or several cycles of the geometric multigrid method. The classical multigrid algorithm uses one or several auxiliary meshes that are coarser than the original (fine) mesh. The idea is to perform just a fraction of the computations on the fine mesh. Instead, it performs computations on the coarser meshes when

possible, which leads to fewer operations. The size of the extra memory used for the coarser meshes and associated matrices is comparable to the size of the original data. This leads to an iterative algorithm that is both fast and memory efficient. See Ref. 18 for more information.

THE ALGEBRAIC MULTIGRID SOLVERS/PRECONDITIONERS

The algebraic multigrid (AMG) solvers or preconditioners perform one or several cycles of the algebraic multigrid method. This is similar to the geometric multigrid algorithm, the difference being that it constructs the multigrid levels directly from the finest-level system matrix A_0. That is, it constructs the prolongations P_i from A_0 without using auxiliary meshes. It constructs the coarse level matrices A_i from A_0 with the Galerkin projection method. The advantage is that you need not bother about the coarse multigrid levels.

THE MULTIGRID ALGORITHM

To describe the multigrid algorithm, assume that you have $N+1$ multigrid levels numbered from 0 to N, where 0 is the finest level (the level for which you seek the solution). To solve the linear system $A_0x = b$ (corresponding to level 0), the algorithm must reform the system matrices $A_1, \ldots, A_N$ for the coarse multigrid levels. It must also compute the *prolongation matrices* P_i that map a solution x vector on level i to the corresponding solution vector P_ix on the next finer level $i-1$.

The prolongation matrices are constructed using plain interpolation from one multigrid level to the other. The system matrices for the coarse levels can be constructed in two ways:

- By assembling A_i on the mesh of level i (the default method).
- By projection from the finer level: $A_i = P_i^T A_{i-1} P_i$. This is also called the Galerkin method. It typically leads to more nonzero elements in the system matrix A_i, but the convergence can be faster than in the default method.

The following algorithm describes one multigrid cycle:

1. The input to the algorithm is some initial guess x_0 to the solution of the system $A_0x = b$.
2. Starting with x_0, apply a few iterations of a *presmoother* to the linear system $A_0x = b$, yielding a more accurate iterate $x_{0\mathrm{s}}$. Typically the presmoother is some simple iterative algorithm such as SOR, but you can also choose any iterative solver.
3. Compute the residual $r_0 = b - A_0x_{0\mathrm{s}}$. The presmoother "smooths" the residual so the oscillations in r have such a long wavelength that they are well resolved on the next coarser level (1). Therefore, project the residual onto level 1 by applying the transpose of the prolongation: $r_1 = P_1^T r_0$.
4. If $N = 1$ use the *coarse solver* to solve the system $A_1x_1 = r_1$. The coarse solver is typically a direct solver such as MUMPS. The number of degrees of freedom on level 1 is less than for level 0, which means that solving $A_1x_1 = r_1$ is less expensive. If instead $N > 1$, solve the system $A_1x_1 = r_1$ (approximately) by recursively applying one cycle of the multigrid algorithm for levels $1, 2, \ldots, N$. In both cases the obtained solution x_1 is called the *coarse grid correction*.
5. Map the coarse grid correction to level 0 using the prolongation matrix: $x_{0\mathrm{c}} = x_{0\mathrm{s}} + P_1x_1$.
6. Starting with $x_{0\mathrm{c}}$, apply a few iterations of a *postsmoother* to the linear system $A_0x = b$, yielding a more accurate iterate $x_{0\mathrm{mg}}$. The default postsmoother is SORU (the version of SOR using the upper triangle of the matrix). The iterate $x_{0\mathrm{mg}}$ is the output of the multigrid cycle.

The cycle just described is called the V-cycle. The recursive call in step 4 (when $N > 1$) is a also a V-cycle. For the W-cycle and the F-cycle, steps 1–6 above are the same but with the twist that the recursive call in step 4 is substituted with two multigrid calls for the coarser levels. For the W-cycle these two calls are recursive calls (W-cycle calls). For the F-cycle the first call is a W-cycle and the second a V-cycle.

For only two multigrid levels ($N = 1$) these cycles are the same because the algorithm uses the coarse solver in step 4. Also the amount of work on the finest level is the same for the different cycles. Normally the V-cycle is sufficient, but the W-cycle and the F-cycle can be useful for more difficult problems.

When using multigrid as a preconditioner, the action of this preconditioner is obtained by applying a fixed number of multigrid cycles. When using multigrid as a solver, the multigrid cycle repeats until it reaches convergence.

When using multigrid as a preconditioner for the conjugate gradients method for a symmetric matrix A, the preconditioning matrix M should also be symmetric. This requirement is fulfilled if the matrices M associated with the presmoother and the postsmoother are transposes of each other. For instance, this is the case if the presmoother is SOR and the postsmoother is SORU, and if the same number of smoothing steps is used. This combination with two smoothing steps is the default.

Notes on the Efficiency of Smoothers

COMSOL Multiphysics performs smoothing on all but the coarsest multigrid level. A smoother should be computationally cheap and effective at reducing the part of the error that has a high spatial frequency on the mesh to which it is applied. Therefore, applying a smoother on several meshes with a hierarchy of mesh sizes results in a more efficient solver than if the smoother were applied only on the finest mesh.

The efficiency of the multigrid method with simple iterations as a smoother (such as the Jacobi and SOR iteration) hinges on the ellipticity of the underlying mathematical problem. For Helmholtz problems originating from an equation

$$-\nabla\cdot\left(\frac{1}{a}\nabla u\right)-\omega^2 u = f$$

or

$$\nabla\times\left(\frac{1}{a}\nabla\times\mathbf{E}\right)-\omega^2\mathbf{E} = \mathbf{F}$$

the obtained linear problem is indefinite for large frequencies ω. For these problems, a simple iteration amplifies smooth eigenmodes if the mesh is too coarse and makes these methods unsuitable as smoothers. To determine when to use a simple iteration, apply the *Nyquist criterion*:

$$h_{\max} < \frac{\lambda}{2} = \frac{\pi}{\omega\sqrt{a}}$$

which says that the mesh must have at least two mesh elements per wavelength. Thus, when using the geometric multigrid solver for these types of problems, ensure that this criterion is fulfilled on the coarsest mesh if simple iterations are used as a smoother. In situations where the criterion is not fulfilled on coarse meshes, GMRES can be a suitable smoother (Ref. 21). However, this setting makes smoothers on all levels more expensive and might not always pay off compared to choosing a coarse grid that satisfies the Nyquist criterion. Note also that a smoother based on a Krylov preconditioner like GMRES requires the (outer) iterative solver to be set to FGMRES.

THE COMPLEX SHIFTED LAPLACE OPERATOR

The convergence of the Multigrid method can be improved by adding a complex shifted Laplace (CSL) contribution — that is, a purely complex term that has the effect of damping oscillations in the solution. CSL is typically applied to wave problems at high frequency. Its effect is limited to the preconditioner and the convergence rate, and it can be applied independently both on the fine and on the multigrid levels. CSL does not change the original system matrix and the final solution. The CSL contribution is a function of the wave number of the problem and is generally multiplied by a relaxation factor $O(1)$. The choice of the relaxation factor is a trade-off between no damping (0) and large damping but deterioration of the preconditioner performance (large values).

The Parametric Solver Algorithm

The Parametric solver performs a loop around the usual stationary solver in which it estimates the initial guess using the solution for the previous parameter value. If the nonlinear solver does not converge and you are solving for a

single parameter, it tries a smaller parameter step; COMSOL Multiphysics determines the size of this step from the convergence speed of the Newton iteration using step-size selection criteria based on work in Ref. 13.

The SCGS Solver

The SCGS iterative solver (smoother) works in a similar way to the blocked update of the Vanka solver, but it builds blocks based on the DOFs in each mesh element instead of blocks based on DOF connectivity to a Vanka variable. The advantage is that the blocks are smaller, allowing for storing their factorization once during the initialization phase (like SOR Line does) instead of factorizing on every update (like Vanka does by default).

Compared to other multigrid smoothers, SCGS provides better performance and is more robust, but it also requires somewhat more memory. SCGS only works for linear elements, and it is the default smoother for fluid-flow models with P1 + P1 elements (linear elements for the velocity field and the pressure).

The solver includes three main methods:

- *Mesh elements*: Each mesh element corresponds to one SCGS block.
- *Mesh element lines*: Anisotropic mesh elements are grouped together in SCGS blocks along the direction of anisotropy, which gives better results for boundary layer meshes. Nonanisotropic mesh elements correspond to one SCGS block.
- *Mesh element lines and vertices*: Anisotropic mesh elements are grouped together in SCGS blocks, like above. The DOFs corresponding to nonanisotropic mesh elements are solved using vertex-based SCGS blocks, which consume less memory than element blocks. A separate relaxation factor can be set for the vertex pass.

The solver additionally has an option to use a Vanka hybrid step where Vanka blocks are first built and then SCGS blocks are built excluding the Vanka variable DOFs. This step makes it possible to run iterative solvers when using, for example, the Laminar Inflow boundary condition, independent of whether the mesh is anisotropic or not.

The Segregated Solver

	Segregated in the *COMSOL Multiphysics Programming Reference Manual*

TERMINATION CRITERION FOR A SEGREGATED SOLVER

For the **Solution** termination criterion: When termination of the Segregated solver is based on the estimated error, it terminates if, for all the groups j, the error estimate is smaller than the corresponding tolerance,

$$\mathrm{err}_{j,k} < \mathrm{tol}_j$$

where the error estimate in segregated iteration k is

$$\mathrm{err}_{j,k} = \max(\mathrm{e}^N_{j,k}, \mathrm{e}^S_{j,k})$$

The number tol_j is the relative tolerance for the corresponding group. For each degree of freedom (DOF), the field variable solved for is $1 \le p \le M$ and $1 \le i \le N_{j,p}$ is the index of that DOF. The largest damped Newton error is then estimated by:

$$\mathrm{e}^N_{j,k} = \max_l(1-\alpha_{l,j})\left[\frac{1}{M}\sum_{p=1}^{M}\frac{1}{N_{j,p}}\sum_{i=1}^{N_{j,p}}\left(\frac{\left|\Delta U_i^{l,j,k,p}\right|}{W_i^{j,p}}\right)^2\right]^{1/2}$$

Here l is taken for all iterations in all substeps solving for the group j, $\alpha_{l,j}$ is the damping factor, $\Delta U^{l,j,k,p}$ is the Newton increment vector, and $N_{j,p}$ is the number of DOFs in the field p. The weight factor $W_i^{j,p}$ is described below. Moreover,

$$e_{j,k}^{S} = \left[\frac{1}{M}\sum_{p=1}^{M}\frac{1}{N_{j,p}}\sum_{i=1}^{N_{j,p}}\left(\frac{\left|(U^{j,k,p}-U^{j,k-1,p})_i\right|}{W_i^{j,p}}\right)^2\right]^{1/2}$$

is the relative increment over one complete iteration k. In this expression, $U^{j,k,p}$ is the segregated solution vector for the group j, and

$$W_i^{j,p} = \max(\left|U_i^{j,p}\right|, S_i)$$

where S_i is a scale factor that the solver determines from the settings in the **Scaling** section of the **Settings** window for the Dependent Variables node, where the following choices are available in the **Method** list:

- For **Automatic**, S_i is the factor 0.1 times the average of $|U_m|$ for all DOFs m having the same name as DOF i.
- For **Manual**, S_i is the value for DOF i given in the **Manual scaling** field.
- For **Initial value based**, S_i is the factor 0.1 times the average of $|U_{0m}|$ for all DOFs m having the same name as DOF i, where U_0 is the solution vector corresponding to the initial value.
- For **None**, $W_i = 1$.

S_i is independent of the field variable p.

For the **Residual** termination criterion, the segregated solver terminates when the following convergence criterion is satisfied: For all the groups j, the error estimate is smaller than the corresponding tolerance, $\mathrm{err}_{j,k} < \mathrm{tol}_j$, where

$$\mathrm{err}_{j,k} = \left[\frac{1}{M}\sum_{p=1}^{M}\frac{1}{N_{j,p}\tilde{W}_{j,p}^{2}}\sum_{i=1}^{N_{j,p}}\left|(F^{j,k,p})_i\right|^2\right]^{1/2}$$

where F is the current residual, and $\tilde{W}$ are the weights determined by the first and, if applicable, the second residual. The iterations can also terminate if the relative solution based error is in the range of a hundred machine epsilon.

Pseudo Time Stepping

Pseudo time stepping is available in a stationary segregated approach as well; see Pseudo Time Stepping for a description of the CFL control. For the segregated solver, the error estimate e_n in Equation 20-1 is the arithmetic average of the errors in the different segregated groups.

The Sensitivity Analysis Algorithm

When you enable Sensitivity analysis, the stationary solvers compute — in addition to the basic forward solution — the sensitivity of a functional

$$Q = Q(u_p, p) \tag{20-17}$$

with respect to the sensitivity variables p. The forward solution u_p is a solution to the parameterized discrete forward problem

$$L(u_p, p) = N_F\Lambda_p \qquad M(u_p, p) = 0 \tag{20-18}$$

where Λ_p are the constraint Lagrange multipliers, or (generalized) reaction forces, corresponding to the constraints M. It is assumed that Q does not explicitly depend on Λ_p.

To compute the sensitivity of Q with respect to p, first apply the chain rule:

$$\frac{d}{dp}Q(u(p), u_{\text{flux}}(p), p) = \frac{\partial Q}{\partial p} + \frac{\partial Q}{\partial u}\frac{\partial u}{\partial p} + \frac{\partial Q}{\partial u_{\text{flux}}}\left\{\frac{\partial u_{\text{flux}}}{\partial u}\frac{\partial u}{\partial p} + \frac{\partial u_{\text{flux}}}{\partial p}\right\} \tag{20-19}$$

where u_{flux} are the accurate boundary degrees of freedom. In this expression, the sensitivity of the solution with respect to the sensitivity variables, $\partial u/\partial p$, is still an unknown quantity. Therefore, differentiate the forward problem in Equation 20-18 formally with respect to p:

$$K\frac{\partial u_p}{\partial p} + N_F\frac{\partial \Lambda_p}{\partial p} = \frac{\partial L}{\partial p} + \frac{\partial N_F}{\partial p}\Lambda_p \qquad N\frac{\partial u_p}{\partial p} = \frac{\partial M}{\partial p} \tag{20-20}$$

Here, $K = -\partial L/\partial u$ and $N = -\partial M/\partial u$ as usual. Assuming that the constraint force Jacobian N_F is independent of p (that is, $\partial N_F/\partial p = 0$), you can write the above relations in matrix form

$$J\begin{pmatrix}\frac{\partial u_p}{\partial p}\\ \frac{\partial \Lambda_p}{\partial p}\end{pmatrix} = \begin{pmatrix}\frac{\partial L}{\partial p}\\ \frac{\partial M}{\partial p}\end{pmatrix} \qquad J = \begin{bmatrix}K & N_F\\ N & 0\end{bmatrix} \tag{20-21}$$

Solve for the sensitivities $\partial u_p/\partial p$ and $\partial \Lambda_p/\partial p$, and plug them back into Equation 20-19:

$$\frac{dQ}{dp} = \frac{\partial Q}{\partial p} + \begin{pmatrix}\frac{\partial Q}{\partial u}\\ 0\end{pmatrix}^T J^{-1}\begin{pmatrix}\frac{\partial L}{\partial p}\\ \frac{\partial M}{\partial p}\end{pmatrix} \tag{20-22}$$

This formula gives dQ/dp explicitly in terms of known quantities, but in practice it is too expensive to invert the matrix J.

The accurate boundary flux degrees of freedom are obtained internally by solving equation for flux degrees of freedom:

$$K_{\text{flux}}u_{\text{flux}} = L_{\text{flux}}$$

where K_{flux} is not dependent on either the parameter p or the solution. The L_{flux}, on the other hand, can be a solution- and parameter-dependent quantity, and therefore the sensitivity solvers assemble these derivatives:

$$\frac{\partial L_{\text{flux}}}{\partial u} \text{ and } \frac{\partial L_{\text{flux}}}{\partial p}$$

If the number of individual sensitivity variables, p_j, is small, Equation 20-21 can be solved for each right-hand side $[\partial L/\partial p_j\ \partial M/\partial p_j]^T$, and the solution is then inserted into Equation 20-19. This is the *forward method*, which in addition to the sensitivity dQ/dp returns the sensitivity of the solution, $\partial u_p/\partial p$. The matrix J is in fact the same matrix as in the last linearization of the forward problem. The forward method therefore requires one additional back-substitution for each sensitivity variable.

If there are many sensitivity variables and the sensitivity of the solution itself, $\partial u_p/\partial p$, is not required, the *adjoint method* is more efficient. It is based on using auxiliary variables u^* and L^*, known as the *adjoint solution*, to rewrite Equation 20-22:

$$\frac{dQ}{dp} = \frac{\partial Q}{\partial p} + \begin{pmatrix} u^* \\ \Lambda^* \end{pmatrix}^T \begin{pmatrix} \frac{\partial L}{\partial p} \\ \frac{\partial M}{\partial p} \end{pmatrix}$$
$$J^T \begin{pmatrix} u^* \\ \Lambda^* \end{pmatrix} = \begin{pmatrix} \frac{\partial Q}{\partial u} \\ 0 \end{pmatrix} \tag{20-23}$$

In this form only one linear system of equations must be solved regardless of the number of sensitivity variables, followed by a simple scalar product for each variable. This is much faster than the forward method if the number of variables is large. The system matrix, which is solved for, is the transpose of the last linearization of the forward problem. This makes no significant difference for the iterative linear solvers. For the direct solvers, if J is symmetric or Hermitian, this makes no difference compared to the forward method, and the direct solvers can reuse the factorization. In the nonsymmetric case, MUMPS and PARDISO can reuse the factorization of J while SPOOLES needs to do a new factorization of J^T.

SEGREGATED SENSITIVITY SOLVER

When using the segregated solver together with sensitivity, a segregated approach will also be taken for the sensitivity problem. This is important from several aspects, but most importantly to not increase the computational requirements.

When using the segregated solver, you need to add the control variables to the right segregated groups. From Equation 20-20, it is clear that for the forward sensitivity problem to be constrained correctly, the control variables need to be added to all the segregated groups where they are part of the constraints. For the adjoint method, the equations are the ones in Equation 20-23 and here the control variables are not involved. The correct constraint handling is taken into account after the segregated solver has converged by using the formula in Equation 20-23 without the explicit need to add them to any group.

	Sensitivity in the *COMSOL Multiphysics Programming Reference Manual.*

About the SOR, SOR Gauge, SOR Line, and SOR Vector Iterative Solver Algorithms

The background information for the SOR, SOR Gauge, SOR Line, and SOR Vector attribute nodes are described in this section.

THE SOR METHOD

The SOR (successive over-relaxation) method provides a simple and memory-efficient solver/preconditioner/smoother based on classical iteration methods for solving a linear system $Ax = b$. Given a relaxation factor ω (usually between 0 and 2), a sweep of the SOR method transforms an initial guess x_0 to an improved approximation $x_1 = x_0 + M^{-1}(b - Ax_0)$, where the preconditioning matrix $M = L + D/\omega$, and D is the diagonal part of A, and L is the strictly lower triangular part of A. When $\omega = 1$ (the default), the Gauss-Seidel method is obtained.

In the SORU method, $M = U + D/\omega$, where U is the strictly upper triangular part of A. The SOR and SORU methods use a more accurate approximation of the matrix, which leads to fewer iterations but slightly more work per iteration than in the Jacobi method.

The SSOR (symmetric successive over-relaxation) method is one SOR sweep followed by a SORU sweep. The output x_1 for an input x_0 also comes from the above formula but with

$$M = \frac{\omega}{2-\omega}\left(L + \frac{D}{\omega}\right)D^{-1}\left(U + \frac{D}{\omega}\right)$$

When the system matrix A is symmetric, the SSOR method has the advantage that the preconditioning matrix M is symmetric. Symmetry of the preconditioner matrix is necessary when using the conjugate gradients iterative method. In such cases, the SSOR preconditioner is preferable to the SOR preconditioner.

THE SSOR GAUGE, SOR GAUGE, AND SORU GAUGE ALGORITHMS

The SOR Gauge algorithms are described.

Magnetostatic problems are often formulated in terms of a magnetic vector potential. The solution of problems formulated with such a potential is in general not unique. Infinitely many vector potentials result in the same magnetic field, which typically is the quantity of interest. A finite element discretization of such a problem results in a singular linear system of equations, $Ax = b$. Despite being singular, these systems can be solved using iterative solvers if the right-hand side of the discretized problem is the range of the matrix A. For discretized magnetostatic problems, the range of A consists of all divergence-free vectors. Even if the right side of the mathematical problem is divergence free, the right side of the finite element discretization might not be numerically divergence free. To ensure that b is in the range of A, SOR gauge performs a divergence cleaning of the right side by using the matrices T and T^T similar to the algorithm for the SOR Vector iterative method. To this end, the system $T^T T\psi = -T^T b$ is first solved. Adding $T\psi$ to b then makes the numerical divergence of the right side small.

THE SOR LINE ALGORITHM

In regions where the mesh is sufficiently anisotropic, the algorithm forms *lines* of nodes (SOR Line) that connect nodes that are relatively close to each other (Ref. 34). Thus, in a boundary layer, a line is a curve along the thin direction of the mesh elements. A smoothing iteration does two things:

- Line update: Performs block SOR smoothing where each block consists of degrees of freedom located on a line. Due to the banded structure of each block matrix, this smoothing runs relatively fast.
- SSOR update: Performs a number of SSOR smoothing iterations on the whole mesh.

Like the SOR and Jacobi smoothers/preconditioners, the algorithm gives an error message if it finds zeros on the diagonal of the system matrix.

THE SOR VECTOR ALGORITHM

The SOR Vector algorithm is an implementation of the concepts in Ref. 31 and Ref. 19. The algorithm applies SOR iterations on the main linear equation $Ax = b$ but also makes SOR iterations on a projected linear equation $T^T A T y = T^T b$. Here the projection matrix, T, is the discrete gradient operator, which takes values of a scalar field in the mesh vertices and computes the vector-element representation of its gradient. Loosely speaking, the argument for using this projection is the following: For example, let the linear equation $Ax = b$ represent the discretization of a PDE problem originating from the vector Helmholtz equation

$$\nabla\times(a\nabla\times\mathbf{E}) + c\mathbf{E} = \mathbf{F}$$

for the unknown vector field $\mathbf{E}$, where a and c are scalars, and $\mathbf{F}$ is some right-hand side vector. Standard preconditioners/smoothers cannot smooth the error in the null space of the operator $\nabla \times (a\nabla \times .)$. This null space is the range of the gradient operator. This algorithm adds a correction $\mathbf{E} \to \mathbf{E} + \nabla\phi$ to the standard SOR smoothed solution (or residual), where it computes ϕ from SOR iterations on a projected auxiliary problem. The projected problem is obtained by taking the divergence (or discretely $-T^T$) of the Helmholtz equation and plugging in the correction. You then obtain

$$-\nabla \cdot (c\nabla\phi) = -\nabla \cdot \mathbf{F}$$

(for clarity, boundary constraints are disregarded), which, if c is definite (strictly positive or strictly negative), is a standard elliptic type of equation for the scalar field ϕ.

When using this algorithm as a smoother for the multigrid solver/preconditioner, it is important — for the correct discrete properties of the projected problem — to generate nested meshes. Also, it performs an element assembly on all mesh levels (controlled by the multigrid **Assemble on all levels** check box). You can generate nested meshes through manual mesh refinements or do so automatically by selecting **Refine mesh** from the **Hierarchy generation method** list in the **Multigrid** node.

The projection matrix T is computed in such a way that nonvector shape functions are disregarded, and you can therefore use it in a multiphysics setting. It can also handle contributions from different geometries. Nonvector shape function variables are not affected by the correction from the projected system, and the effects on them are the same as when you apply the standard SOR algorithm.

The Sparse Approximate Inverse (SAI) Preconditioner

The goal of the *sparse approximate inverse* (Sparse Approximate Inverse (SAI)) preconditioner is to construct a preconditioner matrix M that is an approximate inverse of the system matrix A. The matrix is constructed by solving the minimization problem

$$\min_M \|I - AM\|_F^2 = \min_M \sum_i \|e_i - Am_i\|_2^2 = \sum_i \min_{m_i} \|e_i - Am_i\|_2^2 \tag{20-24}$$

This problem is easily parallelizable because the problems are independent for each column m_i, but because each problem involves solving the equation $Am_i = e_i$, it is costly to construct the matrix M. In general the resulting matrix M is dense. This problem is circumvented by constructing an approximation to M. The goal of the approximation matrix is that it should be sparse. One way of achieving this goal is to predefine a sparsity pattern for M with an associated index set I. Then the problem is reduced to

$$\min_{p(I_i)_i} \| e_i - Ap(I_i)_i \|_2^2 \tag{20-25}$$

where I_i is the index set for column i. Because A is sparse and p_i is zero for all entries that are not part of the index set I_i, there is a corresponding index set J_i that defines the row to solve for. Therefore the original problem is reduced to a least-squares problem

$$\min_{p(I_i)_i} \| e(J_i)_i - A(J_i, I_i)p(I_i)_i \|_2^2 \tag{20-26}$$

for each column p_i in P. The index set can be chosen as the one of the system matrix or of a power of the system matrix. Symmetric problems can be treated using the symmetrization $(P+P^T)/2$.

The Vanka Algorithm

The algorithm is a local smoother/preconditioner of Vanka type. It is based on the ideas in Ref. 20, Ref. 33, and Ref. 34. It is possible to describe it as a block SOR method, where the local coupling of the degrees of freedom (DOFs) determines the blocks. The important idea in this algorithm is to use Lagrange multiplier variables to form the blocks. For illustration purposes, consider the Navier-Stokes equations. For these equations the pressure variable plays the role of Lagrange multiplier. The linearized equations on discrete form have the following structure:

$$A\begin{bmatrix}U\\P\end{bmatrix} = \begin{bmatrix}S & D^T\\D & 0\end{bmatrix}\begin{bmatrix}U\\P\end{bmatrix} = \begin{bmatrix}F\\G\end{bmatrix}$$

where U and P are the velocity and pressure degrees of freedom, respectively. The algorithm loops over the Lagrange multiplier variable DOFs (here the pressure DOFs P_j) and finds the direct connectivity to this DOF. To do so, the algorithm locates the nonzero entries in the matrix column corresponding to P_j. The row indices of the nonzero entries define the DOFs U_k, and the algorithm forms a local block matrix based on this connectivity:

$$A_j = \begin{bmatrix}S_j & D_j^T\\D_j & 0\end{bmatrix}$$

One *Vanka update* loops over all P_j and updates

$$\begin{bmatrix}U_j\\P_j\end{bmatrix} \leftarrow \begin{bmatrix}U_j\\P_j\end{bmatrix} + \omega A_j^{-1}\left(\begin{bmatrix}F\\G\end{bmatrix} - A\begin{bmatrix}U\\P\end{bmatrix}\right)_j$$

where the $(.)_j$ denotes the restriction of a vector to the rows corresponding to the block j. ω is a relaxation parameter. The algorithm does not form the inverses of the block matrices explicitly. Instead, it computes the Vanka update with a LAPACK direct solver or a GMRES iterative method subroutine call. The GMRES method is the restarted GMRES without preconditioning. The algorithm relies on the fact that it is possible to invert the submatrices A_j. If it is not possible, the algorithm gives an error message. A zero on the diagonal of A or A_j is not necessarily a problem for this updating strategy. In general, the Vanka update does not necessarily update all DOFs. This is the case for problems with weak constraints, where only a small subset of the problem's DOFs are directly coupled to the Lagrange multipliers for the constraints. Another example is the Navier-Stokes equations coupled to other equations, but where the coupling is not directly through the pressure variable (in the k-ε turbulence model, for example). The Vanka algorithm automatically detects DOFs that are not updated by the above Vanka updating procedure and performs, for each Vanka update, a number of SSOR sweeps for these DOFs. This part of the algorithm is the *SSOR update*; it only works for a submatrix that has a nonzero diagonal. Just as the SOR and Jacobi preconditioner algorithms, this algorithm gives an error message if it finds zeros on the diagonal for the DOFs in the SSOR update.

Complex Shifted Laplacian for Large Helmholtz Problems

Large high-frequency free-space Helmholtz equations can be difficult to solve with the usual iterative solvers such as multigrid and domain decomposition A method to solve such problems is to solve them with a complex wavenumber as a preconditioner for a Helmholtz equation without damping, thereby modifying the equation for the preconditioner in such a way that the convergence rate is improved. This strategy is called the *complex shifted Laplacian* (CSL) (even though it is not the Laplacian that is shifted), and it uses the following method:

Consider Helmholtz equation where the linear equation comes from the discretization of the equation

$$-(\Delta + k^2)u = f$$

The preconditioner matrix for the CSL preconditioner M_β is given by the discretization of the equation

$$-(\Delta + (k^2 + i\beta))u = 0$$

where you choose a value of β such that you get evanescent wave solutions. Instead of solving the original system of equation, you now solve

$$M_\beta^{-1}Ax = M_\beta^{-1}b$$

when using left preconditioning (or the corresponding equation for right preconditioning).

You can activate complex shifted Laplacian for the following iterative solvers: Multigrid (GMG, and on multigrid levels for AMG), Domain Decomposition (Schur), and Domain Decomposition (Schwarz). For details, see the documentation for those solvers.

The WENO Limiter

When computing discontinuous solutions to conservation laws, spurious oscillations and instabilities might arise. For controlling oscillations around discontinuities and stabilizing the computations of typically nonlinear conservation laws, a *WENO (weighted essentially nonoscillatory) limiter* (Ref. 35) is implemented for use in the discontinuous Galerkin method. WENO is available for the Wave Form PDE and Compressible Euler Equations interfaces.

In order to save computational cost, the WENO limiter is applied where deemed needed. To this end a TVB (total variation bounded) troubled cell indicator is used. You can specify the TVB constant. A larger value means that a smaller number of cells will use WENO.

To avoid generating significant oscillations in the numerical solution, the WENO limiter is applied in each inner stage of a Runge-Kutta scheme. The third-order SSP (strong stability preserving) Runge-Kutta is recommended and is the default for the Compressible Euler Equations interface.

Numerical simulation of the compressible Euler equations might for stability require both a limiter for shocks and a positivity limiter of density and pressure. Together with the WENO limiter it is possible to enforce pressure and density positivity for the Compressible Euler Equations interface. The positivity limiter based on Ref. 36 is active by default and can be controlled by the **Positivity-preserving limiter for density and pressure** check box.

Adaptive Mesh Refinement

The **Adaptive Mesh Refinement** node ( ) is a solver attribute that handles adaptive mesh refinement together with a Stationary Solver, an Eigenvalue Solver, or a Time-Dependent Solver. The adaptive mesh refinement creates multiple meshes for segments of a time-dependent simulation. Also see The Adaptive Mesh Refinement Solver.

	For stationary and eigenvalue solvers, the **Adaptive Mesh Refinement** node cannot be added manually but is instead added by the solvers to indicate that they run an adaptive mesh refinement. The **Adaptive Mesh Refinement** node then only includes an **Output** section with information about the adaptation solutions and meshes.

GENERAL

The software performs adaptive mesh refinement in one geometry only. Use the **Adaptation in geometry** list to specify that geometry. If you have specified the geometry in the time-dependent study step, this list is not available.

The following properties appear under **Time-interval control**:

- The **Time-interval length** can be controlled manually or automatically. Select **Manual** (default) or **Automatic**. If **Time-interval length** is **Automatic**, the algorithm strives to assume the given value for the fraction of maximum refinement (default value: 0.2) by controlling the size of the time interval. A value of zero means no refinement of the base mesh and a value of one means refinement everywhere using the maximum element refinements. The shortening and lengthening of the interval is determined by the interval reduction and growth factors described below.

- The value in the **Interval reduction factor** field (default value: 0.5) determines how the solver reduces the time interval length. A value of 0.5 makes the interval length half of the previous interval length when reduced.
- By default, the solver determines the **Interval length** (unit: s) automatically (only available when **Time-interval length** is **Manual**) using an interval length that gives a total of 10 intervals. The length of the time interval is the simulation time before a refinement of the mesh takes place. Select the check box to specify a user-defined time interval length in the field (default value: 0.1 s).

	If the number of intervals (that is, the simulation time divided by the interval length) exceeds 100, the interval length specified here may not be respected. You can enforce such a large number of intervals by prescribing a minimal interval length in the **Minimal interval length** field (see below).

- The value in the **Interval growth factor** (only available when **Time-interval length** is **Automatic**) text field (default value: 2.0) determines how the solver increases the time interval length. A value of 2.0 makes the interval length twice as large as the previous interval length when increased.
- By default, the solver determines the **Initial interval length** (unit: s) automatically (only available when **Time-interval length** is **Automatic**). The length of the initial time interval is the simulation time before the first refinement of the mesh takes place. Select the check box to specify a user-defined time interval length in the field (default value: 0.1 s).
- By default, the solver also determines the **Minimal interval length** (unit: s) automatically. The minimal length of the time interval is the shortest possible simulation time without performing a mesh refinement. Click to select the check box to specify a user-defined minimal interval length in the field (default value: 0.01 s). The interval length is reduced according to the **Interval reduction factor** if the solver fails to converge with the current interval length, in which case the minimal interval length setting can be useful.

For the properties under **Mesh element control**; see Mesh Refinement below.

ERROR ESTIMATION

Use the **Error estimate** list to control how the error estimate is computed.

For time-dependent adaptive mesh refinement you need to specify a user-defined **Error indicator**. Use the text field to give the error indicator function used for the adaptive mesh refinement. You can also specify a range of sample points as an array of real numbers between 0 and 1 for the error estimation in the **Sample points** field. This array controls where to check the error in the next subinterval. For background information to help with this section, see The Adaptive Mesh Refinement Solver.

MESH REFINEMENT

Use the **Adaptation method** list to control how to adaptively refine mesh elements. Select one of these methods:

- **Longest edge refinement**, to make the solver refine only the longest edge of an element by recursively bisecting the longest edge of edge elements that need refinement. This method is less suitable for models with nonsimplex elements. This is the default method.
- **Regular refinement**, to make the solver refine elements in a regular pattern by bisecting all edges of an element that needs refinement.
- **General modification**, to use the current mesh as a starting point and modify it by refinements, coarsening, topology modification, and point smoothing. Use the **Allow coarsening** check box (selected by default) to control if mesh coarsening is used. If the mesh contains anisotropic elements (for example, a boundary layer mesh), it is

best to disable mesh coarsening to preserve the anisotropic structure. If mesh coarsening is allowed, enter a **Maximum coarsening factor** (default: 5) if needed.

- **Rebuild mesh**, to set up a size expression describing the error and rebuild the meshing sequence using the size expression as input. Note that structured meshes, such as mapped and swept meshes, in general are not appropriately refined. This method is not supported on imported meshes. The size of the refined mesh is the minimum of the size of the original mesh (previous refined mesh) and the size defined by the refinement. Specify the **Maximum coarsening factor** (a value of 3 by default) to scale the refined mesh size in the regions where refinement is not needed.

For the **Longest edge refinement** and **Regular refinement** adaptive mesh refinement methods, you can specify the maximum number of refinements of the mesh elements (default: 2) in the **Maximum number of refinements** field. If the **Time-interval length** is set to **Automatic**, you can also specify a value between 0 and 1 in the **Fraction of maximum refinement** field (default value: 0.2) for these adaptation methods. A value of zero means no refinement of the base mesh and a value of one means refinement everywhere using the specified value for the **Maximum element refinements**. Also for these adaptation methods, select or clear the **Convert to simplex mesh** check box (the default is to not use this conversion). Mesh refinement is only possible for simplex meshes. If the original mesh is not a simplex mesh, it can be converted to a simplex mesh by this selection.

Use the **Element selection** list to specify how the solver should select which elements to refine. Select:

- **Rough global minimum** to minimize the L_2 norm of the error by refining a fraction of the elements with the largest error in such a way that the total number of elements increases roughly by the factor specified in the accompanying **Element count growth factor** field. The default value is 1.7, which means that the number of elements increases by roughly 70%.
- **Fraction of worst error** to refine elements whose local error indicator is larger than a given fraction of the largest local error indicator. Use the accompanying **Element fraction** field to specify the fraction. The default value is 0.5, which means that the fraction contains the elements with more than 50% of the largest local error.
- **Fraction of elements** to refine a given fraction of the elements. Use the accompanying **Element fraction** field to specify the fraction. The default value is 0.5, which means that the solver refines about 50% of the elements with the largest local error indicator.

Select the **Store solution when new meshes are created** check box if you want to save the solution for all new adaptively refined meshes. If cleared, the adaptive mesh refinement solver will only store solutions and meshes for adaptation time intervals that contain requested output times. This option is useful if you have many time adaptation intervals but are only interested in a few output times.

RESTART

After each mesh adaptation, the time integration is restarted and you can control the following time-stepping properties:

By default the solver chooses an initial step automatically. Select the **Initial step** check box for manual specification of an initial step.

Use the **Consistent initialization** list to control how the solver performs consistent initialization of differential-algebraic systems by selecting **Off** (the default), **On**, or **Backward Euler**.

OUTPUT

This section contains information about the solution and mesh that contain the results from the adaptive mesh refinement.

- The Adaptive Mesh Refinement Solver
- Adaptive Mesh Refinement (Utility Node)
- The Log Window

Implementing a Point Source: Application Library path **COMSOL_Multiphysics/Equation_Based/point_source**.

Advanced

The **Advanced** node ( ) is an attribute node that handles advanced settings for solver nodes, such as a Stationary Solver, Eigenvalue Solver, and Time-Dependent Solver. Also see About the Advanced Attribute Settings.

GENERAL

Matrix Symmetry

Use the **Matrix symmetry** list to control how the solver handles matrix symmetry of linear system matrices. Select:

- **Automatic** to perform automatic symmetry detection. Both symmetric and Hermitian matrices can be detected.
- **Nonsymmetric** to override the automatic symmetry detection and force the solver to assume that matrices are nonsymmetric.
- **Symmetric** to override the automatic symmetry detection and force the solver to assume that matrices are symmetric.

Selecting **Symmetric** for a problem that does not result in symmetric matrices leads to an incorrect solution. See Which Problems are Symmetric? for information.

- **Hermitian** to override the automatic symmetry detection and force the solver to assume that matrices are Hermitian.

Matrix Format

The matrix format can be a *sparse matrix* or a *full matrix*, which you choose as **Sparse** or **Filled**, respectively, from the **Matrix format** list. The default format is **Automatic**; this setting chooses a sparse or filled matrix format based on the solver used. In addition, you can choose a matrix-free format, which you choose as **Free**. This option assembles the matrix vector product when needed. This can reduce the memory usage significantly for solvers that support the following formats:

- The Iterative solver without preconditioner
- The Krylov Preconditioner without preconditioner

For other solvers, COMSOL Multiphysics automatically changes to another matrix format and issues a warning.

Row Equilibration

Even if variables are well scaled, equations can have very different scales. The **Row equilibration** check box is selected to balance the equations using row equilibration. Even when this check box is selected, row equilibration is not used in the following situations in order to preserve matrix symmetry:

- Automatic matrix symmetry detection is used and the system matrices are symmetric.
- **Symmetric** or **Hermitian** is selected in the **Matrix symmetry** list.
- The conjugate gradients or geometric multigrid solver is used.
- The eigenvalue solver is used.

Null-Space Function

Use the **Null-space function** list to select a method for the computation of matrices needed for constraint handling (see Elimination Constraint Handling). Select:

- **Automatic** to let the software automatically determine the most appropriate method, which uses an explicit handling of nodal constraints and one of the Orthonormal or Sparse methods for the remaining constraints.
- **Orthonormal** to compute the needed matrices using singular value decomposition.
- **Sparse** to handle constraint matrices with nonlocal couplings using a sparse algorithm.
- **Explicit — Orthonormal** to handle constraints by explicitly eliminating the DOFs on the destination side of the explicit constraints. The remaining constraints are handled using the Orthonormal method.
- **Explicit — Sparse** to handle constraints by explicitly eliminating the DOFs on the destination side of the explicit constraints. The remaining constraints are handled using the Sparse method.

Explicit constraints are obtained when the Nodal constraint method is used for boundary conditions like Periodicity and Continuity on boundary pairs.

Orthonormal Block Limit

For the Automatic null-space function method, you can specify an **Orthonormal block limit**, which is used in the automatic choice between Orthonormal and Sparse handling (for elemental constraints). If an estimate of the complexity (the number of operations) needed to SVD factorize the largest constraint block exceeds this limit, the Sparse method is used. Else the Orthonormal method is used. The limit is 10^7 per default. To SVD factorize a block with this complexity is usually fast, so you might want to increase this limit for increased constraint handling stability.

Store Last Residual

You can store the last residual while solving and also in the solver output, if you want to access it using the `residual` operator during postprocessing. Storing the residual in the output increases the memory requirements for the simulations. From the Store last residual list, choose

- **Off** (the default), to not store any data for the latest assembled residual.
- **While solving**, to make the last residual available while solving.
- **While solving and in output**, to make the last residual available while solving and also in the solver's output so that you can access it during postprocessing.

Solver Log

The solver log contains information about the progress and convergence of the solvers (see The Log Window). From the **Solver log** list, choose one of the following formats:

- **Minimal**, which reports a minimal amount of information (for example, warnings and nonstandard feedback). The normal output (once per "step" and so forth) is turned off.

- **Normal** (the default), which reports information about the main solver (the time-dependent solver, for example).
- **Detailed**, which reports information about the main solver and also information about the solver on the level below (a nonlinear stationary solver, for example).

For the time-dependent solvers, you can also specify an interval for the log sampling (in seconds) in the **Log sampling (wall-clock)** field when the **Solver log** list is set to **Normal**. The default is 0.005 s, which means that the log is updated at most every 0.005 s. Increasing the sampling interval can reduce the overhead associated with the log when solving problems with many small time steps. Set the value to 0 to make the log contain every time step regardless of their size.

Other Settings

When the **Automatic rescaling of linear equations** check box is selected, then under certain circumstances the scaling of the equations for the linear solvers can be changed to scales that are taken from the current solution. These circumstances are the following:

- A stationary main solver
- Constant damping
- Automatic scaling for a field, and the scale for this field is changed significantly (about a 100 times).

When this happens, COMSOL Multiphysics adds a printout of the new scales to the solver log.

ASSEMBLY SETTINGS

This section contains some settings related to the assembly process when computing a solution.

By default, the solver chooses the number of mesh elements that are processed together during the assembly process (the block size). Select the **Assembly block size** check box for manual specification of a block size for all null-space function methods except Automatic.

Select the **Reuse sparsity pattern** check box to store the sparsity patterns of the assembled matrices and try to reuse them for successive assembly processes within the same solution process. In many cases, the sparsity pattern of the system matrices does not change from one nonlinear iteration or time step to the others. Reusing the sparsity pattern from the previous iteration or step can then improve the solution performance at the cost of a usually small amount of memory. This functionality is enabled by default when using physics interfaces that can benefit from it. When active, the functionality can also detect whether the stored pattern cannot be used in the current assembly process (that is, when a "pattern mismatch" occurs) and reassemble it. If such a mismatch occurs, a message is added to the solver log. Pattern mismatches have no consequence on the solution process except for a small impact on the assembly performance during the current step or iteration due to the reassembling. Pattern mismatches can occur, for example, when solving a model with identity pairs and sliding meshes.

Select the **Allow complex-valued output from functions with real input** check box to control whether the solver treats such complex-valued output as an error or not.

The **Stop when undefined mathematical operation is detected** check box controls how the solver handles undefined mathematical operations such as division by zero.

Select the **Check for undefined numerical values after each operation** check box to make COMSOL Multiphysics check intermediate results for undefined numerical values (Inf or NaN) when numerical overflow occurs, for example. Selecting this option gives more accurate error messages when such undefined numerical values occur.

Select the **Manual control of reassembly** check box to be able to override the solver mechanism that automatically detects which quantities need to be reassembled. This can be useful to improve efficiency in situations when the automatic mechanism is too sensitive and reassembles quantities that do not need to be reassembled.

Constant Load

If the **Manual control of reassembly** check box is selected, the **Constant load** is **On** by default.

The load (residual vector) is constant if the PDE and the Neumann boundary conditions are linear with time-independent coefficients and right-hand sides. For the discretized model, this means that the residual vector L depends linearly on U:

$$L = L_0 - KU - D\dot{U} - E\ddot{U}$$

and that L_0, K, D, and the mass matrix E are constant.

If you choose to turn **Off** the **Constant load**, it instructs the solver to perform a reassembly process for the computation of the residual vector (when **Off**) or not. However, even if it is off, you might still want to treat some of the matrices as constant. Manual control of reassembly of these quantities can be controlled with the available check boxes, which makes the assembly only occur once for the corresponding matrix.

- Select the **Constant stiffness** check box to treat the stiffness matrix K as constant.
- Select the **Constant damping or mass** check box if you want to treat the coefficients of the first-order time-derivative terms or the second-order time-derivative terms as constant. In the discretized model, this means that the damping (sometimes called mass) matrix D or the mass matrix E is treated as constant.
- Select the **Constant mass** check box to treat the mass matrix E as constant.

Constant Constraint

If the **Manual control of reassembly** check box is selected, you can control reassembly of the constraint residual. By default the **Constant constraint** is **On**. The constraint is constant if the Dirichlet boundary conditions (constraints) are linear and time independent. For the discretized model, this means that the constraint residual M depends linearly on U ($M = M_0 - NU$) and that M_0 and N are constant. It is also assumed that the constraint Jacobian N is correct.

If you choose to turn **Off** the **Constant constraint**, it instructs the solver to perform a reassembly process for the computation of the constraint residual vector (when **Off**) or not. However, even if it is off, the constraint Jacobian might still be constant. To control the reassembly of this quantity, select the **Constant constraint Jacobian** check box if the Dirichlet boundary conditions are linear with time-independent coefficients (not right-hand side). For the discretized model this means that N is constant.

Auxiliary-Space Maxwell (AMS)

The **Auxiliary-Space Maxwell (AMS)** node ( ) is an attribute that handles parameters for linear system solvers/preconditioners that use the auxiliary-space Maxwell solver (AMS). Right-click an Iterative, Krylov Preconditioner, or Coarse Solver node to add an **Auxiliary-Space Maxwell (AMS)** node.

The AMS solver uses the auxiliary-space Maxwell solver preconditioner from the Lawrence Livermore National Laboratory linear solver/preconditioner library *hypre*, a software library of high performance preconditioners and solvers (Ref. 6). AMS provides edge finite element discretization of variational curl-curl problem stemming from stationary or time-dependent Maxwell's equations. The version of AMS available in COMSOL Multiphysics is designed for the lowest-order edge elements. For higher-order discretizations, use it together with the geometric multigrid (GMG) solver with the option **Lower element order first** and a sufficient number of levels so that AMS can work efficiently as a coarse solver. For details, see Ref. 7.

The **Settings** window contains the following section:

GENERAL

Enter the **Number of iterations** of the AMS solver. The default is 2.

In the **Variables** field, add the applicable dependent variables that use vector elements (such as magnetic scalar potential) and that you want to include in the AMS solver. Use the **Delete** ( ) and **Add** ( ) buttons to configure the list of variables.

From the **Cycle type** list, select one of the available AMS cycle types 1–14 (the default is cycle type 1, a multiplicative solver that should work well in most cases; see Ref. 7 for details). These cycle types are various combinations of smoothing and applications of algebraic multigrid on decomposed problems.

From the **Magnetostatics** list, select **Automatic** (the default), **On**, or **Off**. The automatic case determines magnetostatics by comparing the maximum row sum of absolute values for the projected matrix T^TAT and A. Here T is the discrete gradient matrix; see documentation for SOR Vector. Magnetostatics is deduced if the projected matrix is negligible compared to A. If magnetostatics is deduced or chosen, AMS skips the subspace corrections associated with the projected matrix T^TAT.

From the **Divergence cleaning** list, select **Automatic** (the default), **On**, or **Off**. The automatic case is the same as for the determination of magnetostatics. In the magnetostatic case, AMS should skip corrections associated with T^TAT and use divergence cleaning of the right-hand side. You can also manually specify the magnetostatics and divergence cleaning settings. This can be useful if divergence cleaning has already been made or if you suspect that the automatic detection fails.

Automatic Remeshing

The **Automatic Remeshing** node ( ) is an attribute that adds automatic remeshing. The remeshing occurs when the mesh quality falls below a specified value. It can be used together with The Moving Mesh Interface to assure a satisfactory mesh quality throughout the simulation. Right-click a Time-Dependent Solver operation node to add it.

	AutoRemesh in the *COMSOL Multiphysics Programming Reference Manual*.

GENERAL

The software only performs automatic remeshing in one geometry. Use the **Remesh in geometry** list to specify that geometry if the model contains more than one geometry.

CONDITIONS FOR REMESHING

From the **Condition type** list, choose between different types of conditions for when remeshing should occur. Select:

- **Mesh quality** (the default). The solver remeshes when the mesh quality becomes less than a given limit. Edit the **Mesh quality expression** as needed, or click the **Replace Expression** button ( ) to choose another expression. Edit the limit in the **Stop when mesh quality is below** field (default value: 0.2).
- **Distortion**. The solver remeshes when the distortion that the mesh has undergone becomes larger than a given limit. Edit the **Distortion expression** or click the **Replace Expression** button ( ) and choose another expression for the distortion if desired. Edit the limit in the **Stop when distortion exceeds** field (default: 2) if desired. The condition for stopping is (for a model component called `comp1`)

  ```
  sqrt(comp1.material.I1isoMax) > 2
  ```

  The variable `comp1.material.I1isoMax` is the (nonnegative) first invariant of the isochoric Green–Lagrange strain, E_{iso}, defined as

$$I_1(E_{\text{iso}}) = \text{tr}\frac{1}{2}\left(\frac{F^TF}{J^{2/n}} - I\right) = \frac{\text{tr}F^TF}{2J^{2/n}} - \frac{n}{2}$$

where F is the deformation gradient, J its determinant, and n is the space dimension. When the distortion is small, the following approximation is applicable:

$$I_1(E_{\text{iso}}) \approx 2I_2(E_{\text{dev}}) \approx 2I_2(\varepsilon_{\text{dev}}) = \sum_{i<j}\frac{1}{n}(\varepsilon_i - \varepsilon_j)^2 + 2\varepsilon_{ij}^2$$

- **General**. The solver remeshes when a logical condition becomes true. Edit the condition in the **Stop when condition is true** field or click the **Replace Expression** button ( ) and choose another expression.

The **Remesh at** setting determines which previous solution is used for the remeshing:

- When **Last output from solver before stop** is selected, the remeshing is done on the last solution that would have been stored by the solver if remeshing would not have occurred. This setting discards any solver progress done since the last output.
- When **Last step taken by solver before stop** is selected (the default), the remeshing is done using the solution from the last solver step before the condition for remeshing became fulfilled. Only the very last solver step, at which the condition was triggered, is discarded. Typically this setting is preferred because then the progress of the automatic remeshing does not depend on the solver's list of output times.

REMESH

After each remeshing, the time integration is restarted and you can control the following time-stepping properties.

By default the solver chooses an initial step automatically. Select the **Initial step** check box to enter a different value (SI unit: s).

To control how the solver performs **Consistent initialization** of differential-algebraic systems, select **Off** (the default), **On**, or **Backward Euler** from the list.

By default, the **Store solution when new meshes are created** check box is selected. If you do not want to store the solutions, clear this check box.

OUTPUT

This section contains information about which solution and meshes contain the results from the automatic remeshing node.

Coarse Solver

The **Coarse Solver** node ( ) is an auxiliary attribute subnode used by the Multigrid and Domain Decomposition (Schwarz) attribute nodes. This node does not have any settings. Instead, its purpose is to administrate coarse grid solvers for a multigrid solver. To add a solver, right-click the **Coarse Solver** node.

Control Field

The **Control Field** node ( ) is an attribute node that handles settings for field variables that are acting as control variables. Control variables have a special status when using the Sensitivity or Optimization solver. Each control field has a separate **Control Field** node. This attribute is used together with the Dependent Variables node.

GENERAL

The **Field components** section displays the variable names for the fields components.

Use the **Solve for this field** check box to control whether to use this variable when solving a sensitivity or optimization problem. For other parts of the solution process, the control fields are held fixed. This setting is only available if the **Dependent Variables** node's setting **Defined by study step** is set to **User defined**. If the variable is not solved for, its values are determined by the settings in the **Values of Variables Not Solved For** section of the corresponding **Dependent Variables** node.

Use the **Store in output** check box to control whether to store the variable in any output solution or not. Clearing this check box saves memory by not storing the field if it is not needed for the postprocessing.

A variable can still be solved for despite not being stored in output and vice versa.

Control State

The **Control State** (p) node is an attribute node that handles settings for state variables that are acting as control variables. Control (state) variables have a special status when using the Sensitivity or Optimization solver. Each control state has a separate **Control State** node. This attribute is used together with the Dependent Variables node.

GENERAL

The **State Components** section displays the variable names for the states components.

Use the **Solve for this state** check box to control whether to use this variable when solving a Sensitivity or Optimization problem. For other parts of the solution process, the control variables are held fixed. This setting is only available if the **Dependent Variables** node's setting **Defined by study step** is set to **User defined**. If the variable is not solved for its value is determined by the settings in the **Values of Variables Not Solved For** section of the corresponding **Dependent Variables** node.

Use the **Store in output** check box to control whether to store the variable in any output solution or not.

A variable can still be solved for despite not being stored in output and vice versa.

Direct

The **Direct** node ( ) is an attribute that handles settings for direct linear system solvers. Use it together with a Stationary Solver, Eigenvalue Solver, and Time-Dependent Solver, for example. The attribute can also be used together with the Coarse Solver attribute when using multigrid linear system solvers.

An alternative to the direct linear system solvers is given by iterative linear system solvers which are handled via the Iterative attribute node. Several attribute nodes for solving linear systems can be attached to an operation node, but only one can be active at any given time.

Also see Choosing the Right Linear System Solver, which describes The MUMPS Solver, The PARDISO Solver, and The SPOOLES Solver.

GENERAL

Select a linear system **Solver**. Select:

- **MUMPS** (multifrontal massively parallel sparse direct solver) (the default).
- **PARDISO** (parallel sparse direct solver). See Ref. 3 for more information about this solver.

- **SPOOLES** (sparse object-oriented linear equations solver). See Ref. 2 for more information about this solver.
- **Dense matrix** to use a dense matrix solver. The dense matrix solver stores the LU factors in a filled matrix format. It is mainly useful for boundary element (BEM) computations.

MUMPS

For **MUMPS** it estimates how much memory the unpivoted system requires. Enter a **Memory allocation factor** to tell MUMPS how much more memory the pivoted system requires. The default is 1.2.

Select a **Preordering algorithm**: **Automatic** (the default automatically selected by the MUMPS solver), **Approximate minimum degree**, **Approximate minimum fill**, **Quasi-dense approximate minimum degree**, **Nested dissection**, or **Distributed nested dissection**.

Select the **Row preordering** check box (selected by default) to control whether the solver should use a maximum weight matching strategy or not. Click to clear the check box to turn off the weight matching strategy.

Select the **Reuse preordering** check box (selected by default) to reuse the reordering of the system, which speeds up the computation but leads to a higher memory peak.

	The **Reuse preordering** option has a weak dependence on the system matrix. In extreme cases, this can cause the solvers to fail. If you suspect this is the problem, make sure that the **Check error estimate** setting is not set to **No** in the **Error** section below. Then, if the linear solvers fail and the preordering is old, a new preordering will be done.

The default **Use pivoting** is **On**, which controls whether or not pivoting should be used.

- If the default is kept (**On**), enter a **Pivot threshold** number between 0 and 1. The default is 0.1. This means that in any given column, the algorithm accepts an entry as a pivot element if its absolute value is greater than or equal to the specified pivot threshold times the largest absolute value in the column.
- For **Off**, enter a value for the **Pivoting perturbation**, which controls the minimum size of pivots (the pivot threshold). The default is 10^{-8}.

	The perturbation strategy is not as robust as ordinary pivoting. In order to improve the solution, MUMPS uses iterative refinements.

Select the **Block low rank factorization** check box to make a low rank approximation of the LU factors, both when computing them and when storing them. The value for the **Blow low rank factorization tolerance** controls the quality of the approximation. The block low rank factorization is an approximate but accurate LU-factorization method that can provide a faster factorization and potentially save memory in your models. For the compression, select a type from the **Compression type** list: **Normal** (the default) or **Aggressive**. The aggressive compression can potentially use less memory and be faster, at the expense of a slightly lower accuracy for the approximations of the LU factors.

The MUMPS out-of-core solver stores the LU factors on the hard drive. This storage minimizes the internal memory usage. The cost is longer solution times because it takes longer time to read and write to disk than it takes using physical memory.

	You can specify the temporary directory where MUMPS stores the LU factors using the `-tmpdir` switch. See Running COMSOL Multiphysics.

From the **Out-of-core** list, choose **On** to store all matrix factorizations (LU factors) as blocks on disk rather than in the computer's memory. The solver reads some of the blocks into memory and performs the LU-factorization on

the part that is currently in memory. The blocks of data are then written back to disc and new blocks are read into memory. The size of the blocks that the solver reads from disc is controlled by the in-core memory setting.. Choose **Off** to not store the matrix factorizations on disk. The default setting is **Automatic**, which switches the storage to disk (out-of-core) if the estimated memory (for the LU factors) is exhausting the physically available memory. For the automatic option, you can specify the fraction of the physically available memory that will be used before switching to out-of-core storage in the **Memory fraction for out-of-core** (a value between 0 an 1). The default is 0.99; that is, the switch occurs when 99% of the physically available memory is used.

When the **Out-of-core** list is set to **Automatic** or **On**, you can choose to specify how to compute the in-core memory to control the maximum amount of internal memory allowed for the blocks (stored in RAM and not on disk) using the **In-core memory method** list:

- Choose **Automatic** (the default) to derive the in-core memory from system data and a given formula:

$$M_{\text{incore}} = \max\{M_{\text{min}}, f_{\text{use}} \cdot (M_{\text{tot}} - K_{\text{int}} \cdot M_{\text{use}})\} \tag{20-27}$$

  where you can specify M_{min} in the **Minimum in-core memory (MB)** field (default 512 MB), f_{use} in the **Used fraction of total memory** field (default: 0.8; that is, 80% of currently available memory), and K_{int} in the **Internal memory usage factor** field (default: 3). M_{tot} is the total physical memory on the computer, and M_{use} is the physical memory used on the computer before the solver starts.
- Choose **Manual** to specify the in-core memory directly in the **In-core memory (MB)** field. The default is 512 MB.

PARDISO

Select a **Preordering algorithm**: **Nested dissection multithreaded** (the default to perform the nested dissection faster when COMSOL Multiphysics runs multithreaded), **Minimum degree**, or **Nested dissection**.

Select a **Scheduling method** to use when factorizing the matrix:

- **Auto** (the default): Selects one of the two algorithms based on the type of matrix.
- **One-level**
- **Two-level**: Choose this when you have many cores as it is usually faster.

Select the **Row preordering** check box (selected by default) to control whether the solver should use a maximum weight matching strategy or not. Click to clear the check box to turn off the weight matching strategy.

Select the **Reuse preordering** check box (selected by default) to reuse the reordering of the system, which speeds up the computation but leads to a higher memory peak.

	The **Reuse preordering** option has a weak dependence on the system matrix. In extreme cases, this can cause the solvers to fail. If you suspect this is the problem, make sure that the **Check error estimate** setting is not set to **No** in the **Error** section below. Then, if the linear solvers fail and the preordering is old, a new preordering will be done.

By default, the **Bunch-Kaufman pivoting** check box is not selected. Click to select it and control whether to use 2-by-2 Bunch-Kaufman partial pivoting instead of 1-by-1 diagonal pivoting.

By default, the **Multithreaded forward and backward solve** check box is selected so that the backward and forward solves run multithreaded. This mainly improves performance when there are many cores and the problem is solved several times, such as in eigenvalue computations and iterative methods. Click to clear this check box and not run the solver multithreaded.

The **Pivoting perturbation** field controls the minimum size of pivots (the pivot threshold ε).

	To avoid pivoting, PARDISO uses a pivot perturbation strategy that tests the magnitude of the potential pivot against a constant threshold of $\varepsilon = \alpha \lvert PP_{\mathrm{MPS}} D_r A D_c P \rvert_\infty$, where P and P_{MPS} are permutation matrices, D_r and D_c are diagonal scaling matrices, and $\lvert \cdot \rvert_\infty$ is the infinity norm (maximum norm). If the solver encounters a tiny pivot during elimination, it sets it to $\mathrm{sign}(l_{ii})\varepsilon \lvert PP_{\mathrm{MPS}} D_r A D_c P \rvert_\infty$. The perturbation strategy is not as robust as ordinary pivoting. In order to improve the solution, PARDISO uses iterative refinements.

Select the **Parallel Direct Sparse Solver for Clusters** check box to use the Parallel Direct Sparse Solver (PARDISO) for Clusters from the Intel® MKL (Intel® Math Kernel Library) when running COMSOL Multiphysics in a distributed mode.

The PARDISO out-of-core solver stores the LU factors on the hard drive. This storage minimizes the internal memory usage. The cost is longer solution times because it takes longer time to read and write to disk than it takes using physical memory.

	You can specify the temporary directory where PARDISO stores the LU factors using the `-tmpdir` switch. See Running COMSOL Multiphysics.

From the **Out-of-core** list, choose **On** to store all matrix factorizations (LU factors) as blocks on disk rather than in the computer's memory. The solver reads some of the blocks into memory and performs the LU-factorization on the part that is currently in memory. The blocks of data are then written back to disc and new blocks are read into memory. The size of the blocks that the solver reads from disc is controlled by the in-core memory setting. Choose **Off** to not store the matrix factorizations on disk. The default setting is **Automatic**, which switches the storage to disk (out-of-core) if the estimated memory (for the LU factors) is exhausting the physically available memory. For the automatic option, you can specify the fraction to be stored on disk in the **Memory fraction for out-of-core** (a value between 0 an 1; the default is 0.99). If needed, the out-of-core PARDISO solver automatically increases the in-core memory that is required.

When the **Out-of-core** list is set to **Automatic** or **On**, you can choose to specify how to compute the in-core memory to control the maximum amount of internal memory allowed for the blocks (stored in RAM and not on disk) using the **In-core memory method** list:

- Choose **Automatic** (the default) to derive the in-core memory from system data and a given formula:

$$M_{\mathrm{incore}} = \max\{M_{\mathrm{min}}, f_{\mathrm{use}} \cdot (M_{\mathrm{tot}} - K_{\mathrm{int}} \cdot M_{\mathrm{use}})\} \tag{20-28}$$

  where you can specify M_{min} in the **Minimum in-core memory (MB)** field (default 512 MB), f_{use} in the **Used fraction of total memory** field (default: 0.8; that is, 80% of currently available memory), and K_{int} in the **Internal memory usage factor** field (default: 3). M_{tot} is the total physical memory on the computer, and M_{use} is the physical memory used on the computer before the solver starts.
- Choose **Manual** to specify the in-core memory directly in the **In-core memory (MB)** field. The default is 512 MB.

SPOOLES

Select a **Preordering algorithm**: **Best of ND and MS** (the best of nested dissection and multisection), **Minimum degree**, **Multisection**, or **Nested dissection**.

Enter a **Pivot threshold** number between 0 and 1. The default is 0.1. This means that in any given column the algorithm accepts an entry as a pivot element if its absolute value is greater than or equal to the specified pivot threshold times the largest absolute value in the column.

ERROR

You can control the accuracy of the solution of the linear system from the **Check error estimate** list:

- The default is **Automatic**, meaning that the main solver is responsible for error management. The solver checks for errors for every linear system that is solved. To avoid false termination, the main solver continues iterating until the error check passes or until the step size is smaller than about $2.2 \cdot 10^{-14}$. With this setting, linear solver errors are either added to the error description if the nonlinear solver does not converge, or added as a warning if the errors persist for the converged solution.
- Choose **Yes** to check for errors for every linear system that is solved. If an error occurs in the main solver, warnings originating from the error checking in the direct solver appear. The error check asserts that the relative error times a stability constant ρ is sufficiently small. This setting is useful for debugging problems with singular or near singular formulations.
- Choose **No** for no error checking.

Use the **Factor in error estimate** field to manually set the stability constant ρ. The default is 1.

The **Iterative refinement** check box is selected by default (except for the eigenvalue solver) so that iterative refinement is used for direct and iterative linear solvers. For linear problems (or when a nonlinear solver is not used), this means that iterative refinement is performed when the computed solution is not good enough (that is, the error check returned an error). It is possible that the refined solution is better. Iterative refinement can be a remedy for instability when solving linear systems with a solver where convergence is slow and errors might be too large, due to ill-conditioned system matrices, for example. If a nonlinear solver is used, iterative refinement is not used by default. You can often get away with intermediate linear solver steps, but if that is not the case, select the **Use in nonlinear solver** check box to use an iterative refinement. The default value in the **Maximum number of refinement** field is 15; you can change it if needed. By default, the **Error ratio bound** is set to 0.5. For both linear and nonlinear solver runs where iterative refinements are used, iterative refinements should be terminated when the error is not decreasing along the iteration. Therefore, the error ratio bound should always be smaller than 1. Because the error is computed in the L_2 norm, the error ratio bound should always be greater than 0. Setting the error ratio bound to 0.5, as suggested by Ref. 8, is a more cautious approach that rarely yields significant underestimations or overestimations of errors, and it always terminates quickly compared to an error ratio bound much closer to 1. When **Check error estimate** is set to **Automatic**, a single warning, *Iterative refinement triggered*, appears in the **Log** window if the iterative refinement is triggered. When **Check error estimate** is set to **Yes**, the same warning and the number of iterative refinements applied in each linear solver call are shown in the **Log** window.

	For an example using a Stationary Solver, *The Blasius Boundary Layer*: Application Library path **COMSOL_Multiphysics/Fluid_Dynamics/blasius_boundary_layer**. For an example using an Eigenvalue Solver, *Isospectral Drums*: Application Library path **COMSOL_Multiphysics/Equation_Based/isospectral_drums**.

Direct Preconditioner

The **Direct Preconditioner** node ( ) is an attribute that you can add as a preconditioner. Using a direct solver as a preconditioner makes it possible to solve one of the physics interfaces in a multiphysics model using a direct solver. With this preconditioner you can use a direct solver for one of the smaller fields (an ODE, for instance) and combine it with another more efficient solver for another larger physics problem (a displacement field in 2D or 3D, for instance).

The settings in the **Direct Preconditioner** node's **Settings** window's **General** section are the same as for the **Direct** solver node (see Direct).

Use the settings in the **Hybridization** section to set up a hybrid preconditioner where the direct preconditioner is active for some dependent variables. See Hybrid Preconditioners for more information.

Domain Decomposition (Schur)

The **Domain Decomposition (Schur)** node ( ) is an attribute node that can be used together with the Iterative and Coarse Solver nodes. Use it to set up an domain decomposition solver using the Schur complement method. Domain decomposition divides the modeling domain into subdomains where the equations in the subdomains are easier to solve. The total solution is then obtained by iterating between the computed solutions for each subdomain using the currently known solutions from the other subdomains as boundary conditions. The domain decomposition (Schur) solver is a typically more stable but less memory efficient alternative to the domain decomposition (Schwarz) solver.

Default Schur Solver and Domain Solver nodes are also added. The domain can be any of the direct and iterative solvers, and also a geometric multigrid solver. When you use a multigrid solver as the domain solver for domain decomposition, each domain solves an independent linear problem using a multigrid solver. Each linear problem is created from the underlying multigrid solver's mesh case hierarchy. The domain problems can then be solved independently.

Also see The Domain Decomposition Solvers.

GENERAL

Select a **Schur ordering**: **Multiplicative** (the default) or **Additive**. These ordering options determine which corresponding Schwarz algorithm (see Domain Decomposition (Schwarz)) to use for solving the Schur complement system.

For any **Schur ordering**, enter values or choose an option as needed:

- **Number of iterations**. The default is 1.
- **Minimum number of subdomains**. The default is 4. The subdomain partition is created from an element partition on the solver level.
- **Maximum number of DOFs per subdomain**. The default is 100,000 DOFs. The solver tries to not create subdomains larger than this and increases the number of subdomains to fulfill the target. The lowest value accepted is 1000.
- **Maximum number of nodes per subdomain**. The default is 1. This option is only relevant in cluster computations. Each subdomain is then handled by the selected number of compute nodes.
- **Preordering algorithm**: **Nested dissection** (the default), **Space-filling curve**, or **None**. The **Nested dissection** option creates a subdomain distribution by means of the element and vertex lists taken from the mesh. This option typically gives a low number of colors and gives balanced subdomains (equal number of DOFs, small subdomain interfaces, and a smaller overlap if extended). To avoid slim domains, you can also use a preordering algorithm based on a **Space-filling curve**. The following plots show a 2D subdomain configuration without element preordering (left) and with an element reordering based on a space-filling curve (right):

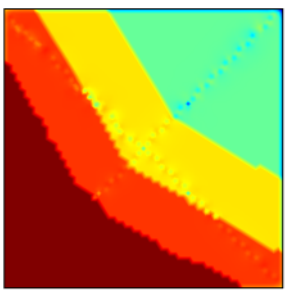

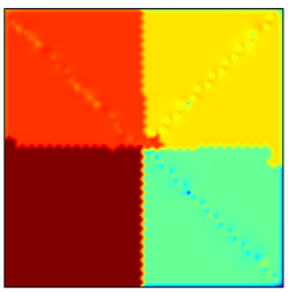

- Choose an option from the **Recompute and clear subdomain data** list if required: **Automatic** (default), **Off**, or **On**. The **On** option is a computationally expensive option because the subdomain problems are factorized for each iteration and then cleared from memory. If you use the **Automatic** option, the recompute and clear mechanism is activated if there is an out-memory-error during the domain decomposition setup phase. The setup is then repeated with recompute and clear activated. A warning is given in this case.
- If **Multiplicative** is selected as the **Schur ordering**, the **Use subdomain coloring for localized Schur complements** check box is selected by default to use a coloring technique that leads to more efficient computations for the multiplicative method because it requires the global residual to be updated after each subdomain. The coloring technique gives each subdomain a color such that subdomains with the same color are disjoint and can be computed in parallel before the residual is updated. Click to clear the check box as needed.
- In the **Partition geometries** list, include the geometries (components) in the model that you want to partition using domain decomposition. By default, this list includes all geometries in the model. Use the **Move Up** ( ), **Move Down** ( ), **Delete** ( ), and **Add** ( ) buttons to configure the lists of geometries.

HYBRIDIZATION

User the settings in the **Hybridization** section to set up a hybrid preconditioner where the direct preconditioner is active for some dependent variables. See Hybrid Preconditioners for more information.

Domain Decomposition (Schwarz)

The **Domain Decomposition (Schwarz)** node ( ) is an attribute node that can be used together with the Iterative and Coarse Solver nodes. Use it to set up an additive, multiplicative, hybrid, or symmetric Schwarz overlapping domain decomposition solver. Domain decomposition divides the modeling domain into subdomains where the equations in the subdomains are easier to solve. The total solution is then obtained by iterating between the computed solutions for each subdomain using the currently known solutions from the other subdomains as boundary conditions. The domain decomposition (Schwarz) solver is efficient for distributed memory systems (cluster computing) and as a more memory-efficient alternative to a direct solver for large problems.

Default Coarse Solver and Domain Solver nodes are also added. The domain solver can be any of the direct and iterative solvers, and also a geometric multigrid solver. When you use a multigrid solver as the domain solver for domain decomposition, each domain solves an independent linear problem using a multigrid solver. Each linear problem is created from the underlying multigrid solver's mesh case hierarchy. The domain problems can then be solved independently.

Also see The Domain Decomposition Solvers.

GENERAL

Select a **Solver**: **Multiplicative Schwarz** (the default), **Additive Schwarz**, **Hybrid Schwarz**, or **Symmetric Schwarz**.

For any **Solver**, enter values or choose an option as needed:

- **Number of iterations**. The default is 1.
- **Minimum number of subdomains**. The default is 2. The subdomain partition is created from an element partition on the solver level.
- **Maximum number of DOFs per subdomain**. The default is 100,000 DOFs. The solver tries to not create subdomains larger than this and increases the number of subdomains to fulfill the target. The lowest value accepted is 1000.
- **Maximum number of nodes per subdomain**. The default is 1. This option is only relevant in cluster computations. Each subdomain is then handled by the selected number of compute nodes.
- **Additional overlap**. The default is 1 mesh element. Each subdomain in the initial (nonoverlapping) partition is extended via the connectivity of the stiffness matrix in a recursive algorithm or by the connectivity of the mesh

(see **Overlap method**); this setting controls the number of additional mesh elements — added to the necessary single mesh element — in the overlap between adjacent subdomains.

- **Overlap method**: **Automatic** (the default), **Matrix based**, or **Mesh based**. The automatic setting chooses the overlap method based on the matrix format used. The matrix-based overlap method considers the matrix connectivity whereas the mesh-based overlap method considers neighboring mesh elements. Select **Mesh based** if the matrix-based overlap generates too large overlapping subdomains.
- **Overlap correction**: **None** (default), **Restricted Schwarz**, **Harmonic extension,** or **Unity weighting**. These options affect the definition of the restriction operators and have benefits in terms of less communication on cluster and less iteration numbers for Additive Schwarz methods.
- **Preordering algorithm**: **Nested dissection** (the default), **Space-filling curve**, or **None**. The **Nested dissection** option creates a subdomain distribution by means of the element and vertex lists taken from the mesh. This option typically gives a low number of colors and gives balanced subdomains (equal number of DOFs, small subdomain interfaces, and a smaller overlap if extended). To avoid slim domains, you can also use a preordering algorithm based on a **Space-filling curve**. The following plots show a 2D subdomain configuration without element preordering (left) and with an element reordering based on a space-filling curve (right):

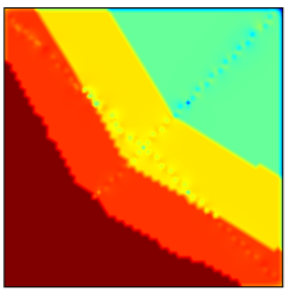

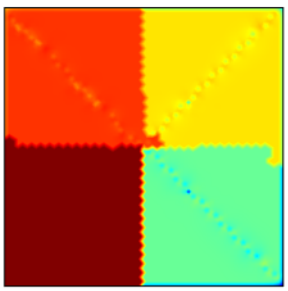

- Choose an option from the **Recompute and clear subdomain data** list if required: **Automatic** (default), **Off**, or **On**. The **On** option is a computationally expensive option because the subdomain problems are factorized for each iteration and then cleared from memory. If you use the **Automatic** option, the recompute and clear mechanism is activated if there is an out-memory-error during the domain decomposition setup phase. The setup is then repeated with recompute and clear activated. A warning is given in this case.
- If **Multiplicative Schwarz** or **Symmetric Schwarz** is selected as the **Solver**, the **Use subdomain coloring** check box is selected by default to use a coloring technique that leads to more efficient computations for the multiplicative and symmetric methods because they require the global residual to be updated after each subdomain. The coloring technique gives each subdomain a color such that subdomains with the same color are disjoint and can be computed in parallel before the residual is updated. Click to clear the check box as needed.
- Select the **Prefer the free matrix format** check box to automatically choose the matrix free format, which can save memory. Then select a boundary condition from the **Domain boundary** list: **Dirichlet boundary condition**, (the default), **Zero flux**, or **Absorbing boundary condition** (see The Domain Decomposition Solvers). To improve the convergence rate for large Helmholtz problems, select the **Shifted Laplace contribution** check box. See Shifted Laplace Contribution (CSL) below.
- In the **Partition geometries** list, include the geometries (components) in the model that you want to partition using domain decomposition. By default, this list includes all geometries in the model. Use the **Move Up** ( ), **Move Down** ( ), **Delete** ( ), and **Add** ( ) buttons to configure the lists of geometries.

Shifted Laplace Contribution (CSL)

If you have selected the **Absorbing boundary condition**, then select:

- The **Physics** from the list.

- Add a weak contribution method from the **Add weak contribution** list:
  - **Automatic**: The code internally creates a weak contribution for the selected physics. Specify a zero-order coefficient as a scalar value in the **Zero-order coefficient** field (default: 0.75). You can add a second-order term by selecting the **Second-order term** check box and specifying a second-order coefficient (default: 0.005). These coefficients correspond to α and β, respectively, in the following equation for an absorbing boundary condition:

$$\left(\frac{\partial}{\partial \mathbf{n}} + \alpha k + \beta \Delta_{\partial\Omega_i}\right) u^j = 0$$

    The **Automatic** option is only supported for the Helmholtz equation. Select the **Keep generated weak contribution** check box in order to keep the CSL weak contribution feature in the Physics node.
  - **Manual**: Specify the complete weak-form expression in the **Weak expression** field. This expression can be applied to any Physics available in the list above. Select the **Keep generated weak contribution** check box to keep the CSL weak contribution feature in the Physics node.
  - **From physics**: the absorbing boundary condition weak contribution is taken from the Physics node. Only use this option if a weak contribution feature was previously added by selecting the **Keep generated weak contribution** check box together with the **Automatic** or **Manual** options as described above.
  - **Off**: No absorbing boundary condition is added for the selected Physics.

If you have selected the **Shifted Laplace contribution** check box to use CSL, then select:

- The **Physics** from the list.
- Add a weak contribution method from the **Add weak contribution** list:
  - **Automatic**: The code internally creates a weak contribution for the selected physics. Specify a **Shift coefficient** relaxation factor (default: 1). The **Automatic** option is only supported for the Helmholtz equation. Select the **Keep generated weak contribution** check box in order to keep the CSL weak contribution feature in the Physics node.
  - **Manual**: Specify the complete weak-form expression in the **Weak expression** field. This expression can be applied to any Physics available in the list above. Select the **Keep generated weak contribution** check box to keep the CSL weak contribution feature in the Physics node.
  - **From physics**: the CSL weak contribution is taken from the Physics node. Only use this option if a weak contribution feature was previously added by selecting the **Keep generated weak contribution** check box together with the **Automatic** or **Manual** options as described above.
  - **Off**: No CSL is added for the selected Physics.

COARSE LEVEL

From the **Use coarse level** list, choose one of the following types:

- **Geometric** (the default). This option uses geometric multigrid method (GMG). See Geometric below.
- **Algebraic**: This option uses the algebraic multigrid method (AMG). See Algebraic below.
- **Aggregation**: This option uses the smoothed aggregation AMG method. See Aggregation below.
- **Off**: No coarse level is used.

Geometric

Select an option from the **Coarse level generation method** list to specify how to generate the coarse multigrid level:

- **Lower element order first (any)**. The default. Generates first a coarse level by lowering the order (by one) of any of the used shape functions. If there are no shape functions that can be lowered, the mesh is coarsened.
- **Coarsen mesh and lower order**. Combines lowering of the used shape function order and a coarsening of the mesh.

- **Lower element order first (all)**. Generates first a coarse level by lowering the order (by one) of all the used shape functions. If this is not possible, the mesh is coarsened.
- **Coarsen mesh**. Does not change the order.
- **Lower element order and refine (all)**. Generates a coarse level by lowering the order (by one) of all the used shape functions. If this is not possible, the mesh is refined a number of times. The mesh solved for can, with this method, be a finer one than the one selected under the study node.
- **Lower element order and refine (any)**. Generates a coarse level by lowering the order (by one) of any of the used shape functions. If there are no shape functions that can be lowered, the mesh is refined. The mesh solved for can, with this method, be a finer one than the one selected under the Study node.
- **Refine mesh**. Does not change the order.
- **Manual**. Use this setting to select a coarse multigrid level from the existing ones. You then specify the coarse multigrid level to use in the **Use coarse level** list. Use the **Move Up** ( ), **Move Down** ( ), **Delete** ( ), and **Add** ( ) buttons to configure the list of multigrid levels. Use the **Assemble on coarse level** check box to assemble the discrete differential operators on the coarse multigrid level (selected by default).
- **None**. Use this setting to not generate a coarse level.

For any **Coarse level generation method** (except Manual), additional settings are available:

- In the **Use coarse level in geometries** list, select the geometries to apply the coarse multigrid level to. Use the **Move Up** ( ), **Move Down** ( ), **Delete** ( ), and **Add** ( ) buttons to configure the list of geometries.
- The **Assemble on coarse level** check box is selected by default to assemble the discrete differential operators. Otherwise, these operators are formed using the restriction and prolongation operators. Click to clear the check box as needed.

When **Coarsen mesh and lower order**, **Lower element order first (all)**, **Lower element order first (any)**, or **Coarsen mesh** are selected from the **Coarse level generation method** list:

- Enter a **Mesh coarsening factor** to select the degree of coarsening to apply to the meshes when using mesh coarsening as the multigrid hierarchy generation method. The higher this number, the more aggressive the mesh coarsening is. The default is 2.
- Select the **Keep generated coarse level** check box to save the meshes for all levels under the mesh node.

When **Lower element order and refine (all)**, **Lower element order and refine (any)**, or **Refine mesh** are selected from the **Hierarchy generation method** list, select a **Refinement method** to refine the multigrid levels when using mesh refinement as the multigrid hierarchy generation method. The options are:

- **Split longest side**. The default method. Elements are subdivided such that the longest side in each element is always split. This yields not so many new elements, while also preserving mesh quality.
- **Regular refinement**. Elements are subdivided in a regular manner.

Also, for the methods that include a refinement, the solver uses the original mesh as the coarse mesh and the refined mesh as the new solution mesh.

Algebraic

For the Algebraic option the following settings are available:

- Enter the **Number of multigrid levels** (default: 5).
- To enter a **Maximum number of DOFs at coarsest level**, first select the associated check box. If the check box is cleared (the default), the value is taken from the **Maximum number of DOFs per subdomain** field. The default is 5000. Coarse levels are added until the number of DOFs at the coarsest level is less than the max DOFs at coarsest level or until it has reached the number of multigrid levels.

- Enter a value or use the slider to set the **Quality of coarse grid**. Higher quality means faster convergence at the expense of a more time consuming setup phase. For instance, if the linear solver does not converge or if it uses too many iterations, try a higher value to increase the accuracy in each iteration, meaning fewer iterations. If the algebraic multigrid algorithm runs into memory problems, try a lower value to use less memory. The range goes from 1 to 10, where 10 gives the best quality. The default is 3.
- The **Lower element order first (any)** check box is selected by default. This setting provides the combination of GMG with lower order until order 1 is reached and then uses AMG to generate the coarser levels. The **Assemble on the order-lowered levels** check box, which is selected by default, then corresponds to the GMG option top assemble on all level. Using this setting is equivalent to using GMG with AMG as a coarse grid solver.

See The Algebraic Multigrid Solvers/Preconditioners for more information.

Aggregation

The following settings control the smoothed aggregation algorithm:

- Enter the **Number of multigrid levels** (default: 5).
- To enter a **Maximum number of DOFs at coarsest level**, first select the associated check box. If the check box is cleared (the default), the value is taken from the **Maximum number of DOFs per subdomain** field. The default is 5000. Coarse levels are added until the number of DOFs at the coarsest level is less than the max DOFs at coarsest level or until it has reached the number of multigrid levels.
- The aggregation algorithm is based on a connection criterion, which you specify as a coefficient in the **Strength of connections** field. A node j is connected to another node i, if $\|A_{ij}\| \geq \varepsilon \|A_{ii}\| \|A_{jj}\|$, where ε is the strength of connection coefficient, and A_{ij} is the submatrix of the stiffness matrix defined by the degrees of freedoms on node i and j, respectively. Loosely speaking, the strength of connection value determines how strongly the aggregation should follow the direction of anisotropy in the problem. The default value is 0.01.
- From the **Null-space vectors** list, choose **Constant** (the default) or **Rigid body modes**. For linear elasticity problems, always select **Rigid body modes** because it enhances the convergence properties significantly.
- Select the **Construct prolongators componentwise** check box to do the construction on each component, which can be a good choice for not strongly coupled physics. This check box is only available when the **Null-space vectors** list is set to **Constant**.
- The **Compact aggregation** check box is selected by default to use an aggregation algorithm that forms, on average, smaller aggregates, which leads to a less rapid coarsening.
- Choose how to control the prolongator smoothing using the **Smoothing** list, which is active when the **Prolongator smoothing** check box (selected by default) is selected. The **Auto** option postpones the smoothing for `sdim-1` levels, where `sdim` is the space dimension of the problem. If you choose **Manual**, enter the level to start smoothing at in the **Start smoothing at multigrid level** field.
- The final transfer operator, P, between the fine and coarse problems are smoothed by one application of Jacobi smoothing:

$$P = (I - \omega D^{-1} A_F)\tilde{P}$$

  where ω is the *Jacobi damping factor*, A_F is the *filtered stiffness matrix*, and D is the diagonal of A_F. Specify ω in the **Jacobi damping factor** field. The default value is 2/3.
- By default, the **Use filtering** check box is selected. Filtering means that entries in the stiffness matrix have been dropped if they correspond to degrees of freedoms on a node that has no strong connections. Loosely speaking, filtering highlights anisotropy in the problem and results in a sparser coarse level problem.
- The **Lower element order first (any)** check box is selected by default. This setting provides the combination of GMG with lower order until order 1 is reached and then uses SAAMG to generate the coarser levels. The **Assemble on the order-lowered levels** check box, which is selected by default, then corresponds to the GMG

option top assemble on all level. Using this setting is equivalent to using GMG with SAAMG as a coarse grid solver. In order to solve a coarse grid correction problem, the prolongation matrices are multiplied into a single matrix that maps from the fine level to the coarse level.

Select the **Shifted Laplace contribution on coarse level** check box to add the term to the coarse grid level. The options are the same for the fine grid level as described in the **General** section above.

HYBRIDIZATION

User the settings in the **Hybridization** section to set up a hybrid preconditioner where the direct preconditioner is active for some dependent variables. See Hybrid Preconditioners for more information.

Domain Solver

The **Domain Solver** node ( ) is an auxiliary attribute subnode used by the Domain Decomposition (Schwarz) attribute node. This node does not have any settings. Instead, its purpose is to administrate domain solvers for a domain-decomposition Schwarz solver.

Eigenvalue Parametric

The **Eigenvalue Parametric** node ( ) is an attribute node that handles settings for parameter stepping to add parametric sweeps. For each set of parameter values, an eigenvalue problem is solved.

This attribute can be used together with an Eigenvalue Solver. The functionality is then similar to when Parametric is added as a subnode to a Stationary Solver, but continuation is not supported.

	EigenvalueParam in the *COMSOL Multiphysics Programming Reference Manual*.

GENERAL

Use the **Defined by study step** list to specify if the settings are synchronized with the corresponding study step. Select **User defined** to modify the parameter table and sweep type.

Use the **Sweep type** list to specify the type of sweep to perform. The **Specified combinations** type (the default) solves for a number of given combination of values, while the **All combinations** type solves for all combination of values. Using all combinations can lead to a very large number of solutions.

Use the table with **Parameter name**, **Parameter value list**, and (optional) **Parameter unit** to specify parameter names, values, and units for the parametric solver. Use the **Add** button (+) to add a row to the table. Each row has one parameter name, a corresponding parameter value list, and an optional unit. The unit becomes orange if the unit that you specify does not match the unit given for the parameter where it is defined. For the **Specified combinations** sweep type, the list of values must have equal length. When you click in the **Parameter value list** column to define the parameter values, you can click the **Range** button ( ) to define a range of parameter values. The parameter unit overrides the unit of the global parameter. If no parameter unit is given, parameter values without explicit dimensions are considered dimensionless.

If more than one parameter name has been specified, the lists of parameter values are interpreted as follows: Assume that the parameter names are `p1` and `p2`, and that `p1` has the list 1 3 and `p2` has the list 2 4. For the **Specified combinations** sweep type, the solver first uses `p1` equal to `1` and `p2` equal to `2`. Thereafter, it uses `p1` equal to `3` and `p2` equal to `4`. And when the sweep type is **All combinations**, the solver uses the following order for the parameter combinations: 1 2, 1 4, 3 2, and 3 4.

An alternative to specifying parameter names and values directly in the table is to specify them in a text file. You can use the **Load from File** button ( ) to browse to such a text file. The read names and values are appended to the current table. The format of the text file must be such that the parameter names appear in the first column and the values for each parameter appear row-wise with a space separating the name and values, and a space separating the values. Click the **Save to File** button ( ) to save the contents of the table to a text file (or to a Microsoft Excel Workbook spreadsheet if the license includes LiveLink™ *for* Excel®).

	When loading and saving parameter table data using Excel®, the units in the **Parameter unit** column are included. The unit column is ignored when saving and loading parameter data to *.txt, *.csv, and *.dat files.

CLUSTER SETTINGS

Select the **Distribute parameters** check box to distribute the parameters on several computational nodes. If the problem is too large to run on a single node, you can enable the **Maximum number of groups** field to use the nodes' memory more efficiently. In this case the same parameter is solved for by several nodes that cooperate as if running a nondistributed sweep. The number of nodes that cooperate is equal to the maximum of the total number of nodes divided by the **Maximum number of groups** setting and 1. So if the total number of nodes is 12 and the **Maximum number of groups** is 3, 3 groups with 4 nodes each cooperate.

Error Estimation

The **Error Estimation** node ( ) appears under the solver node when you use goal-oriented error estimation (see Error Estimation — Theory and Variables).

GENERAL

The functional used for the goal-oriented error estimation appears here.

Field

The **Field** node ( ) is an attribute node that handles settings for field variables. Each field variable has a separate **Field** node. This attribute is used together with the Dependent Variables node. The Field node name matches the name of the variable and its variable in the namespace (for example, **Temperature (comp1.T)**).

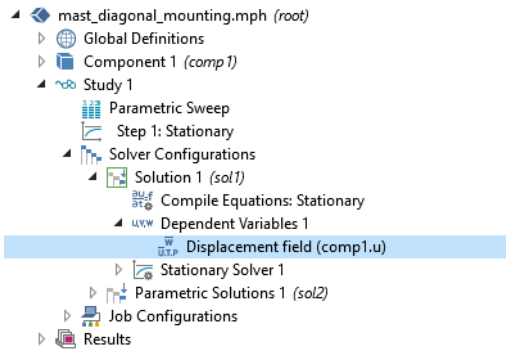

Figure 20-10: An example of a Field node, which takes the name of the variable, in this case Displacement field (Material).

GENERAL

The **Field components** section displays the variable names for the field's components. Also, when extra internal variables are used, these are displayed here as **Internal variables**.

The **Solve for this field** check box and, if applicable, the **Reconstruction** list are available if the Dependent Variables **Defined by study step** setting is **User defined**.

The **Solve for this field** check box controls whether to solve for the field (variable) or not. If the variable is not solved for, its value is determined by the settings in the **Values of Variables Not Solved For** section of the parent **Dependent Variables** node.

If this field is part of a physics for which a **Model Reduction** node is computing a reduced model that include reduction, you can choose a **Reduced Model** node from the **Reconstruction** list, if you want this field to use another reconstruction than the rest of the study.

Use the **Store in output** check box to control whether to store the variable in any output solution or not. A variable can still be solved for despite not being stored in output and vice versa. You can make the MPH file size smaller by not storing the field variable's solution data if it is not of interest for the postprocessing (you may have some data in discrete points or probes that is sufficient, which you can provide as single degrees of freedom using algebraic equations). If the **Dependent Variables** node is user defined, and you have selected the **Store in output** check box, you can choose what to store in the output using the **Store in output** list:

- Choose **All** (the default) to store all solutions for the field in the output.
- Choose **Selection** to use one or more selection nodes to define what part of the field to store in the output; for example, to only store the field on a boundary of interest, thereby reducing the required memory. Click the **Add** button ( ) to open an **Add** dialog box that contains all available selections. Select the selections that you want to add and then click **OK**. You can also delete selections from the list using the **Delete** button ( ) and move them using the **Move Up** ( ) and **Move Down** ( ) buttons.

SCALING

Select a **Method** to control the scaling of a variable.

	Unless **From parent** is selected, specifying a **Method** for a variable here overrides the **Method** selected in the **Scaling** section of the corresponding **Dependent Variables** operation node.

Select:

- **Automatic** to get an automatically determined scaling.
- **From parent** to use the scaling type selected in the **Method** list in the **Scaling** section of the corresponding **Dependent Variables** operation node.
- **Initial value based** to get a scaling that is determined from the initial values. Use this if the components of the initial values give a good estimate of the order of magnitude of the solution.
- **Manual** to manually enter a scaling, then enter a value in the **Scale** field.
- **None** to get no scaling.

Fully Coupled

The **Fully Coupled** attribute node ( ) uses a damped version of Newton's method, or for stationary problems, a double dogleg method, to handle parameters for a fully coupled solution approach. It can be used with the Stationary Solver and the Time-Dependent Solver.

An alternative to the fully coupled approach is given by the segregated solver, which you control with the Segregated node. Although several **Fully Coupled** and **Segregated** attribute subnodes can be attached to an operation node, only one can be active at any given time.

For more information about the settings below, see:

- The Fully Coupled Attribute and the Double Dogleg Method
- Damped Newton Methods
- Termination Criterion for the Fully Coupled and Segregated Attribute Nodes

GENERAL

Select a **Linear solver** for linear systems that appear in the corresponding solver configuration. The available solvers are attribute nodes of the types Direct and Iterative.

METHOD AND TERMINATION

Select a **Nonlinear method** to control which damping factor to use in the damped Newton iterations. Select:

- **Automatic (Newton)** to let the solver automatically determine a damping factor in each iteration of Newton's method. Go to Automatic (Newton) and Automatic Highly Nonlinear (Newton) for settings.
- **Constant (Newton)** to manually specify a constant damping factor that is used in all iterations of Newton's method. Go to Constant (Newton) for settings.
- **Automatic highly nonlinear (Newton)** if the solver does not converge with **Automatic (Newton)** first. It is similar to **Automatic (Newton)** but this method can make the solver more careful when solving highly nonlinear problems. Go to Automatic (Newton) and Automatic Highly Nonlinear (Newton) for settings.
- For stationary problems, choose **Double dogleg** to use the double dogleg nonlinear solver. Go to Double Dogleg for settings.

Automatic (Newton) and Automatic Highly Nonlinear (Newton)

For **Automatic (Newton)** or **Automatic highly nonlinear (Newton)** enter values or expressions for:

- **Initial damping factor**, to specify a damping factor for the first Newton iteration. The default value is 1 for Automatic (Newton) and $1.0 \cdot 10^{-4}$ for Automatic highly nonlinear (Newton).
- **Minimum damping factor**, to specify the smallest allowed damping factor. The default value is $1.0 \cdot 10^{-4}$ for Automatic (Newton) and $1.0 \cdot 10^{-8}$ for Automatic highly nonlinear (Newton).
- **Restriction for step-size update**, to specify a factor that limits how much the damping factor is allowed to change in a Newton iteration. The damping factor can change up or down by at most this factor. The default is 10.
- **Restriction for step-size increase**, to specify the maximum for the allowed absolute increase in the damping factor for a Newton iteration, as opposed to the **Restriction for step-size update** value, which limits how much the damping factor can change relative to the current damping factor. The default value of 1 means that this setting is not active. A smaller value imposes a restriction (0–1 is the valid range for this value).

The automatic Newton solver can get stuck at the minimum damping factor resulting in no convergence. If you enable the **Use recovery factor**, the Newton solver can try additional steps starting with a damping factor equal to the value of the **Recovery damping factor**. This might help to recover from a state where the solver is stuck at the minimum damping factor.

Select an option from the **Use recovery damping factor** list: **Automatic** (the default), **On**, or **Off**.

	The default, **Automatic**, is equivalent to **On** for stationary problems and **Off** for time-dependent problems. For stationary parametric continuation problems, **Automatic** corresponds to **On** when solving for the first parameter value and **Off** when solving for subsequent parameter values.

Choose **Off** if a damping factor smaller than the **Minimum damping factor** is required. The nonlinear solver then terminates. For **On**, the nonlinear solver takes a Newton step using the constant damping factor, which is defined in the **Recovery damping factor** field. The default **Recovery damping factor** is 0.75 when **Automatic** or **On** is selected.

From the **Update weights for automatic scales** list, available for stationary and parametric studies, choose **On** (the default), **Off**, or **Use threshold for weights**:

For **On**, the algorithm updates the weights used for measuring the errors in the automatically damped Newton methods if they change by two orders of magnitude, and then the Newton solver is restarted from the current solution. This approach makes the automatic Newton solver more robust and can lead to fewer overall iterations. For **Off**, there is no update of weights and the behavior is similar to that in earlier versions of COMSOL Multiphysics.

If you choose **Use threshold for weights**, thats option has a selection for **Damping factor at update**. The default is **Fraction of current** with a value of 1 for the **Fraction of current damping factor**. The other option in the **Damping factor at update** list is **Constant**, where you can provide a constant damping factor as the **Update damping factor**. You can also specify the **Weights threshold factor for update** (default: 100), which determines when the weights are deemed to have changed significantly and an update of the weights is needed.

Then continue with the Termination Technique and Termination Criterion settings that follow.

Constant (Newton)

For **Constant (Newton)**:

- Enter a value for the **Damping factor** to specify a constant damping factor for Newton's method. The default is 1.
- With a Time-Dependent Solver, select the **Limit on nonlinear convergence rate** check box to force the nonlinear solver to terminate as soon as the convergence is estimated to be too slow. The default is 0.9. Enter a limit on the convergence rate in the field as required.
- With a Time-Dependent Solver, choose a **Jacobian update**: **Minimal** (the default), **On every iteration**, or **Once per time step**:
  - **Minimal** reuses the Jacobian for several nonlinear systems whenever deemed possible.
  - **On every iteration** computes a new Jacobian for all iterations of Newton's method.
  - **Once per time step** computes a new Jacobian on the first iteration of each time step.
- With a Stationary Solver or a parametric solver, choose a **Jacobian update**: **Minimal**, **On every iteration** (the default), or **On first iteration**:
  - **Minimal** reuses the Jacobian for several nonlinear systems whenever deemed possible.
  - **On every iteration** computes a new Jacobian for all iterations of Newton's method.
  - **On first iteration** computes a new Jacobian on the first iteration of each parameter step.
- The **Update weights for automatic scales** check box, available for stationary and parametric studies, is selected by default. When selected, the solver updates the weights if they change by two orders of magnitude, and then the Newton solver is restarted from the current solution. Clear this check box to turn off the update of weights for automatic scales.

Continue with the Termination Technique — Constant (Newton), Termination Criterion, and Termination Criterion settings that follow.

Double Dogleg

If **Double dogleg** is selected for stationary problems:

- Enter a value for the **Initial damping factor**, to specify a damping factor for the first Newton iteration. The default value is $1.0 \cdot 10^{-4}$.

- Choose a **Residual scaling**: **Field-wise** or **Uniform. Field-wise** scales the equations based on the field-wise sizes of the initial residual. If **Uniform** is selected, the algorithm terminates on the relative residual based on the initial residual.
- The double dogleg solver can restart, if the solver iterations are considered as stagnated. The stagnation is defined by a given number of consecutive iterations that all have a Newton damping factor less than 0.1 and a step size smaller than 0.1 times the tolerance. By default, the restart is active with 7 iterations before the restart. To turn off the restart, clear the **Number of iterations before restart** check box. The number of iterations before restart must be a positive integer.

Continue with the Termination Technique settings that follow.

Termination Technique

For any **Nonlinear method**, select a **Termination technique** to control how the Newton iterations are terminated. Select:

- **Tolerance** to terminate the Newton iterations when the estimated relative error is smaller than a specified tolerance. Then enter the **Maximum number of iterations** to limit the number of Newton iterations. When the maximum number of iterations have been performed, Newton's method is terminated even if the tolerance is not fulfilled.
- **Iterations or tolerance** to terminate the Newton iterations when the estimated tolerance is smaller than a specified tolerance or after a specified number of iterations, whichever comes first. Then enter the **Number of iterations** to specify a fixed number of iterations to perform.
- If **Tolerance** or **Iterations or tolerance** are set as the **Termination technique**, then enter a **Tolerance factor** to modify the tolerance used for termination of the Newton iterations. The actual tolerance used is this factor times the value specified in the **Relative tolerance** field in the **General** sections of the Stationary Solver and Time-Dependent Solver.

Termination Technique — Constant (Newton)

When **Constant (Newton)** is the nonlinear method, you can also choose **Iterations** to terminate the Newton iterations after a fixed number of iterations. Enter the **Number of iterations** to specify a fixed number of iterations to perform.

Termination Criterion

This section is available for a Stationary Solver only, but not if the termination technique is set to **Iterations**. Select a **Termination criterion** to control how the Newton iterations are terminated. Select:

- **Solution** to terminate the Newton iterations on a solution-based estimated relative error.
- **Residual** to terminate the Newton iterations on a residual-based estimated relative error.
- **Solution or residual** to terminate the Newton iterations on the minimum of the solution-based and residual-based estimated relative errors. Enter a scalar **Residual factor** multiplying the residual error estimate. The default is 1000.
- **Solution and residual** to terminate the Newton iterations on a solution-based estimated relative error and a residual-based estimated relative error (that is, a more stringent termination criterion). Enter a scalar **Residual factor** multiplying the residual error estimate. The default is 1000.

Stabilization and Acceleration — Constant (Newton)

When **Constant (Newton)** is the nonlinear method, you can select one of the following methods for stabilization and acceleration of the nonlinear convergence from the **Stabilization and acceleration** list:

- **None** (the default) to not use any stabilization or acceleration method.
- **Pseudo time-stepping** to use a pseudo time-stepping method to stabilize convergence toward steady state for a stationary solver. Pseudo time stepping is not available for time-dependent solvers. See Pseudo Time Stepping for more information. For the pseudo time-stepping method, specify the following parameters:
  - **Initial CFL number**. The default is 5.
  - **PID controller - proportional**. The default is 0.65.
  - **PID controller - integral**. The default is 0.05.
  - **PID controller - derivative**. The default is 0.05.
  - **Target error estimate**. The default is 0.1.
  - Select the **Anderson acceleration** check box to activate Anderson acceleration for the pseudo time-stepping method. See below.
  - Select the **Override Jacobian update** check box to override updates of the Jacobian. The **CFL threshold** value (default: 100), which is the value of the CFL number where overriding of the Jacobian update becomes active. From the **Jacobian update** list, choose **On first iteration** (the default) or **Minimal**, which updates the Jacobian at least once and then only when the nonlinear solver fails during parameter stepping. It reuses the Jacobian for several nonlinear systems whenever deemed possible.
- **Anderson acceleration**, which is a nonlinear convergence acceleration method that uses information from previous Newton iterations to accelerate convergence. The Anderson acceleration method is primarily intended for acceleration of nonlinear iterations in transport problems involving, for example, crosswind diffusion stabilization. It is useful is for solving linear or almost linear problems using the segregated solver, where convergence can be improved and the performance increased. You can control the number of iteration increments to store using the **Dimension of iteration space** field (default: 10) and the mixing factor as a value between 0 and 1 using the **Mixing factor** field (default: 1.0). The **Iteration delay** field (default 0) contains the number of iterations between pseudo time stepping becomes inactive and Anderson acceleration becomes active. When used for pseudo time stepping, you can also enter a **CFL threshold** value (default: 100), which is the value of the CFL number where Anderson acceleration becomes active and pseudo time stepping becomes inactive.

RESULTS WHILE SOLVING

See Results While Solving in the Common Study Step Settings section. Also see Getting Results While Solving.

	For an example using a Stationary Solver, see *Tubular Reactor with Nonisothermal Cooling Jacket*: Application Library path **COMSOL_Multiphysics/Chemical_Engineering/tubular_reactor**. For an example using a Time-Dependent Solver, see *Effective Diffusivity in Porous Materials*: Application Library path **COMSOL_Multiphysics/Diffusion/effective_diffusivity**.

Hierarchical LU

The **Hierarchical LU** node ( ) is an attribute node that handles parameters for boundary element method (BEM) solvers that use hierarchical LU factorization. Right-click an Iterative, Krylov Preconditioner, Presmoother, Postsmoother, or Coarse Solver attribute node to add an **Hierarchical LU** node.

This node can only be used together with the boundary element method. The Hierarchical LU algorithm approximately factorizes a matrix stored in the BEM Far field approximation format. It is useful when other

preconditioners for BEM fails to converge because it usually converges quickly. You can control the numerical accuracy of the approximate LU factorization with the **Drop tolerance** and **Elimination tolerance** settings.

GENERAL

In this section you specify the properties of the hierarchical LU preconditioner.

Use the **Drop tolerance** field to tune the maximum allowed sizes of dropped (neglected) elements (default: 0.001). A smaller drop tolerance means that the preconditioner drops fewer elements and so the preconditioner becomes more accurate. This leads to fewer iterations in the iterative solver, but memory requirements and preconditioning time increase. A larger drop tolerance means that the preconditioner drops more elements and so memory use and preconditioning time decrease. In this case, however, the preconditioner becomes less accurate, which leads to more iterations in the iterative solver, or, if the drop tolerance is too high, to no convergence at all. Often it is most efficient to use as high a drop tolerance as possible; that is, choose it so that the iterative solver barely converges.

Use the **Elimination tolerance** field to specify the tolerance (default: 1) for the computation of the eliminated Jacobian (multiplies with **Drop tolerance** value).

Use the **Number of iterations** field to specify how many iterations to perform (default: 2). The relaxation factor ω is similar to the one used by, for example, the **SOR** node. Specify such a factor in the **Relaxation factor** field (default: 1). See also About the Relaxation Factor.

HYBRIDIZATION

Use the settings in the **Hybridization** section to set up a hybrid preconditioner where the direct preconditioner is active for some dependent variables. See Hybrid Preconditioners for more information.

Incomplete LU

The **Incomplete LU** node ( ) is an attribute node that handles parameters for linear system solvers/preconditioners that use incomplete LU factorization. Right-click an Iterative, Krylov Preconditioner, Presmoother, Postsmoother, or Coarse Solver attribute node to add an **Incomplete LU** node. Also see About Incomplete LU.

GENERAL

In this section you specify the properties of the incomplete LU preconditioner.

Select a **Solver**. Select:

- **ILU** (the default) to use a solver designed specifically for incomplete LU factorization.
- **ILUT (MKL)** to use the ILUT solver (preconditioner) from Intel® MKL (Intel® Math Kernel Library). Unlike ILU0, ILUT preserves some resulting fill-in in the preconditioner matrix (see Ref. 26).
- **ILU0 (MKL)** to use the ILU0 solver (preconditioner) from Intel® MKL. ILU0 preserves the structure of the original matrix in the result (see Ref. 26).
- **SPOOLES** to use the sparse object-oriented linear equations solver SPOOLES.

The ILUT (MKL) and ILUT0 (MKL) preconditioners can perform better than ILU when solving large systems but are not multithreaded.

	ILUT (MKL) and ILU0 (MKL) are not applicable to complex-valued problems.

Drop Using

For **Incomplete LU**, select an option from the **Drop using** list to specify a drop rule. See Selecting a Drop Rule. Select:

- **Tolerance** (the default) to let the solver drop (neglect) elements that have small enough absolute values. Tune the sizes of the neglected elements either in the **Drop tolerance** field or using the accompanying slide bar. A larger tolerance neglects more elements.
- **Fill ratio** to let the solver keep a certain fraction of the elements. The elements with largest absolute values are kept. Tune the number of nonzero elements in the incomplete factorization using either the **Fill ratio** field or the accompanying field. A smaller fill ratio neglects more elements.

For **ILUT (MKL)**, you can specify both a drop tolerance and a fill ratio.

Drop Tolerance

For **Incomplete LU**, **ILUT (MKL)**, and **SPOOLES**, use the **Drop tolerance** field or the accompanying slide bar to tune the maximum allowed sizes of dropped (neglected) elements (default: 0.01). A smaller drop tolerance means that the preconditioner drops fewer elements and so the preconditioner becomes more accurate. This leads to fewer iterations in the iterative solver, but memory requirements and preconditioning time increase. A larger drop tolerance means that the preconditioner drops more elements and so memory use and preconditioning time decrease. In this case, however, the preconditioner becomes less accurate, which leads to more iterations in the iterative solver, or, if the drop tolerance is too high, to no convergence at all. Often it is most efficient to use as high a drop tolerance as possible; that is, choose it so that the iterative solver barely converges.

Respect Pattern

For **Incomplete LU**, by default the solver never drops elements in positions where the original matrix is nonzero. Clear the **Respect pattern** check box to allow the solver to also drop such elements.

Pivot Threshold

For both **Incomplete LU** and **SPOOLES**, use the **Pivot threshold** field to enter a number between 0 and 1 that acts as pivot threshold (default: 1). This means that in any given column, the algorithm accepts an entry as a pivot element if its absolute value is greater than or equal to the specified pivot threshold times the largest absolute value in the column. The solver permutes rows for stability. In any given column, if the absolute value of the diagonal element is less than the pivot threshold times the largest absolute value in the column, it permutes rows such that the largest element is on the diagonal. Thus the default value 1 means that it uses partial pivoting.

Number of Iterations and Relaxation Factor

For **Incomplete LU**, **ILUT (MKL)**, and **ILU0 (MKL)** — once the approximate factors L and U have been computed — you can use the incomplete LU factorization as an iterative preconditioner/smoother. Here, $M = (LU)/\omega$, where ω is a relaxation factor, and L and U are the approximate factors. Use the **Number of iterations** field to specify how many iterations to perform (default: 1). The relaxation factor ω is similar to the one used by, for example, the **SOR** node. Specify such a factor in the **Relaxation factor** field (default: 1). See also About the Relaxation Factor.

Preordering Algorithm

For **SPOOLES**, use the **Preordering algorithm** list to select one of the following preorderings:

- **Nested dissection** (NS, the default)
- **Minimum degree**
- **Multisection** (MS)
- **Best of ND and MS** (the best of nested dissection and multisection)

Iterative

The **Iterative** node ( ) is an attribute that handles settings for iterative linear system solvers. You can use it with an Eigenvalue Solver, Stationary Solver, or Time-Dependent Solver, for example.

An alternative to the iterative linear system solvers is given by direct linear system solvers, which are handled via the Direct attribute node. Although several attribute subnodes for solving linear systems can be attached to an operation node, only one can be active at any given time.

The iterative solver iterates until a relative tolerance is fulfilled. You specify this tolerance in the **Relative error** field of the operation node to which this attribute belongs.

Also see The Iterative Solvers, Iterative Solver Types, and Selecting a Preconditioner for an Iterative Linear System Solver for more details about the settings under **General**.

GENERAL

This section contains settings for choosing an iterative linear system solver and for specifying the type of preconditioning and some settings for the error norm and error estimation.

Iterative Linear System Solver Settings

Use the **Solver** list to select an iterative linear system solver. Select:

- **GMRES** to use the restarted GMRES (Generalized Minimum RESidual) iterative method.
- **FGMRES** to use the restarted FGMRES (Flexible Generalized Minimum RESidual) iterative method.
- **BiCGStab** to use the BiCGStab (BiConjugate Gradient Stabilized) iterative method.
- **Conjugate gradients** to use the Conjugate gradients iterative method.
- **TFQMR** to use the TFQMR (transpose-free quasi-minimal residual) iterative method.
- **Use preconditioner** to use the active preconditioner attached to this **Iterative** node as the linear system solver. This solver uses the settings for **Factor in error estimate** and **Maximum number of iterations** from the **Error** section of the corresponding **Iterative** node.

If **GMRES** or **FGMRES** is selected, specify the **Number of iterations before restart** that the solver performs until it restarts (the default is 50). There is no guarantee that a restarted GMRES converges for a small restart value. A larger restart value increases the robustness of the interactive procedure, but it also increases memory use and computational time. For large problems, the computational cost to produce a preconditioner of such quality that the termination criteria are fulfilled for a small number of iterations and for a small restart value is often large. For those problems, it is often advantageous to set up a preconditioner with a somewhat lesser quality and instead increase the restart value or iterate more steps. Doing so typically increases the condition number for the preconditioned system, so an increase in the error-estimate factor might be needed as well.

If any other linear system solver than **FGMRES** is selected, specify whether you are **Preconditioning** the linear system matrix from the **Left** or **Right**. Normally, this setting does not significantly influence the convergence behavior of the selected solver. The default choice is left preconditioning. Normally, for GMRES, the two versions of GMRES have similar convergence behavior (see Ref. 12). If the preconditioner is ill-conditioned, there could, however, be differences in the behavior. For the conjugate gradient method, this choice only affects the convergence criterion and not the algorithm itself.

If you use left preconditioning, a residual tolerance is available in the **Residual tolerance** field (default: 0.01). You can use this setting to obtain extra accuracy. If you for some reason do not want that extra accuracy, set the relative tolerance to one (1).

Settings for Error Norms and Error Estimation

If you use preconditioning, select the **Nonlinear-based error norm** check box to allow termination of the linear iterative methods using a criterion other than the standard ones (that is, norm checks of the relative preconditioned residual or the relative residual). The nonlinear-based error norm is foremost used for time-dependent studies (enabled per default), where the (initial) residual can be very small for certain time steps and the requirements become too strict. The nonlinear-based error norm normalizes the preconditioned residual with the scales from the solution instead of the initial residual. This method is more reliable when the scales for (size of) the solution have

saturated. This is the reason for having a level, which you can specify as a relative error norm value in the **Use below error level** field (default: 0.1 for stationary solvers and 1 for time-dependent solvers). For Stationary studies it is not common that the initial residual is small, so this functionality is not enabled per default. Also, if **GMRES** is selected and left preconditioning is used, the **Use nonlinear scales** check box is available and selected so that the termination of the iterative solver use nonlinear scales. This setting corresponds to the termination behavior in earlier versions.

The stopping criteria for the iterative solvers are based on an error estimate, which checks if the relative residual times a stability constant ρ is less than a tolerance. This tolerance is specified in the **Relative error** field of the operation node to which this attribute belongs. Use the **Factor in error estimate** field to set ρ, which serves as a safety factor to avoid premature termination of the iterations due to, for example, ill-conditioning of the matrix A or poor preconditioning (default: 1). A larger value of ρ increases the number of iterations but decreases the chance that the iteration is terminated too early. To avoid false termination, the main solver continues iterating until the error check passes or until the step size is smaller than about $2.2 \cdot 10^{-14}$.

For information about the convergence criteria used by the iterative solvers, see Convergence Criteria for Iterative Solvers

Use the **Maximum number of iterations** field to enter a maximum number of iterations that the iterative solver is allowed to take (default: 10,000 iterations). When this number of iterations has been performed without reaching the specified tolerance, the solver stops with an error message.

ERROR

The error handling mechanism in the linear iterative solvers is intended to contribute to a general robustness of the computation. For example:

- Elimination of a possible premature termination.
- Obtaining extra accuracy for the linear system of equations for the sake of a fewer nonlinear iterations.
- Avoiding warnings and errors related to ill-conditioned preconditioners.

Use the **Factor in error estimate** field to manually set the stability constant ρ. The default is 1.

You can control the accuracy of the solution of the linear system from the **Check error estimate** list:

- The default is **Automatic**, meaning that the main solver is responsible for error management. The solver checks for errors for every linear system that is solved. To avoid false termination, the main solver continues iterating until the error check passes or until the step size is smaller than about $2.2 \cdot 10^{-14}$. With this setting, linear solver errors are either added to the error description if the nonlinear solver does not converge, or added as a warning if the errors persist for the converged solution. The nonlinear solver continues when it reaches the maximum number of iterations. Use the **Maximum number of intermediate iterations** field to control the efforts spent in each linear solver call (default: 100 iterations).
- Choose **Yes** to check for errors for every linear system that is solved. If an error occurs in the main solver, warnings originating from the error checking in the direct solver appear. The error check asserts that the relative error times a stability constant ρ is sufficiently small. This setting is useful for debugging problems with singular or near singular formulations.
- Choose **No** for no error checking.

For an example using a Stationary Solver, see *Micromixer*: Application Library path **COMSOL_Multiphysics/Fluid_Dynamics/micromixer**.

Jacobi

The **Jacobi** node ( ) is an attribute that handles settings for the Jacobi (or diagonal scaling) method. Right-click the Iterative, Krylov Preconditioner, Presmoother, Postsmoother, or Coarse Solver attribute nodes to add a **Jacobi** feature.

The Jacobi method provides a simple and memory-efficient solver/preconditioner/smoother based on classical iteration methods for solving a linear system of the form $Ax = b$. Given a relaxation factor ω (usually between 0 and 2), a sweep of the Jacobi (diagonal scaling) method transforms an initial guess x_0 to an improved approximation $x_1 = x_0 + M^{-1}(b - Ax_0)$, where $M = D/\omega$, and D is the diagonal part of A.

GENERAL

Settings When Not Used With Coarse Solver

Enter the **Number of iterations** to perform when this node is used as a preconditioner or smoother. This setting is not considered when the attribute is used as a linear system solver (with the **Use preconditioner** option in the **Solver** list of the **Iterative** attribute node). The solver then iterates until the relative tolerance specified by the corresponding operation node is fulfilled rather than performing a fixed number of iterations.

	With the Molecular Flow Module plus the Particle Tracing Module, see *Molecular Flow Through an RF Coupler*: Application Library path **Molecular_Flow_Module/Benchmarks/rf_coupler**.

Settings When Used With a Coarse Solver

If this node is used with a Coarse Solver, select a **Termination technique** to determine how to terminate the solver. Select **Fixed number of iterations** to perform a fixed number of iterations each time the **Coarse Solver** is used, or **Use tolerance** to terminate the **Coarse Solver** when a tolerance is fulfilled.

If **Fixed number of iterations** is selected, enter a value for the **Number of iterations** to perform. The default is 10.

If **Use tolerance** is selected, enter a value for each of the following:

- **Relative tolerance** to specify the termination tolerance. The default is 0.1.
- **Maximum number of iterations** that the solver is allowed to take. When this number of iterations has been performed without reaching the tolerance specified in the **Relative tolerance** field, the solver is automatically stopped with an error message.

Also enter a **Relaxation factor** to specify a scalar relaxation factor ω. The allowed values of this factor are between 0 and 2. The default is 1. See About the Relaxation Factor for more information.

Krylov Preconditioner

The **Krylov Preconditioner** node ( ) is an attribute node that handles settings for Krylov-type methods. The settings are similar to the Iterative attribute node; the difference is that this node is an auxiliary attribute node, whereas Iterative handles settings for a main iterative solver.

Right-click an Iterative, Presmoother, Postsmoother, Coarse Solver, or Schur Solver attribute node to add a **Krylov Preconditioner**.

GENERAL

Select a linear system **Solver**: **GMRES** (the default), **FGMRES**, **BiCGStab**, **TFQMR**, or **Conjugate gradients**. See Iterative Solver Types for descriptions.

- When **GMRES** or **FGMRES** is selected, enter a **Number of iterations before restart** to specify how many iterations the solver should take between each restart. A larger number increases robustness but also memory use and computational time.
- When **GMRES**, **BiCGStab**, **TFQMR**, or **Conjugate gradients** is selected, select an option from the **Preconditioning** list to specify whether to precondition the linear system matrix from the **Left** or from the **Right**. Normally, this setting does not significantly influence the convergence behavior of the selected solver.
- For all **Solver** types, select a **Termination technique**:
  - **Fixed number of iterations** to perform a fixed number of iterations each time the solver is used.
  - **Use tolerance** to terminate the solver when a tolerance is fulfilled. Then enter a **Relative tolerance** and the **Maximum number of iterations** the solver is allowed to take. When this number of iterations has been performed without reaching the tolerance specified in the **Relative tolerance** field, the solver is automatically stopped with an error message.
  - **Iterations or tolerance** to terminate when the estimated tolerance is smaller than a specified tolerance or after a specified number of iterations, whichever comes first. Then enter a **Relative tolerance**.
- For all **Solver** types, enter the **Number of iterations**. The default is 500.

ERROR

Select an option from the **Validate error estimate** list: **Automatic** (the default), **Yes**, or **No**. By choosing the appropriate option from the **Validate error estimate** list, the error estimate for left preconditioned solvers can be validated. **No** implies no error estimate validation, whereas **Automatic** or **Yes** does. By default the validation is enabled with the **Automatic option**, meaning that it is performed, but preconditioner warnings are only issued if the iterative solver fails with an error. This setting is propagated recursively and applies to all children with left preconditioning.

Localized Schur

The **Localized Schur** node ( ) is an attribute to a Schur Solver. It is an alternative to the default Sparse Localized Schur node. The Localized Schur method solves a filled, dense equation system, whereas the Sparse Localized Schur method filters out small matrix elements and can therefore use all solvers.

Use the **Termination technique** list to select how to terminate the solver. Select:

- **Fixed number of iterations** (the default) to perform a fixed number of iterations each time the **Schur Solver** is used.
- **Use tolerance** to terminate the **Schur Solver** when a tolerance is fulfilled.
- **Iterations or tolerance** to terminate when the estimated tolerance is smaller than a specified tolerance or after a specified number of iterations, whichever comes first.

Further options that apply to the selection (as indicated at each bullet) made in the **Termination technique** list are:

- **Number of iterations** (available when **Termination technique** is set to **Fixed number of iterations** or **Iterations or tolerance**). Use this field to specify the fixed number of iterations to perform (default: 2).
- **Relative tolerance** (available when **Termination technique** is set to **Use tolerance** or **Iterations or tolerance**). Use this field to specify the termination tolerance (default: 0.1).
- **Maximum number of iterations** (only available when **Termination technique** is set to **Use tolerance**). Use this field to enter a maximum number of iterations that the solver is allowed to take (default: 10). When this number of

iterations has been performed without reaching the tolerance specified in the **Relative tolerance** field, the solver automatically stops with an error message.

Lower Limit

The **Lower Limit** node ( ) makes it possible to impose restrictions on degrees of freedom (field variables). These restrictions are checked after each substep of a segregated approach. The restriction is performed without any regards to the equations, so use this restriction with care. Enforcing a lower limit on a field variable can be useful to ensure positivity of a volume fraction of particles or the positivity of turbulence model variables, for example. Right-click a Segregated node to add a **Lower Limit** node.

LOWER LIMIT

By default, no variables have active lower limits. To activate lower limits for field variables, use the **Lower limits (field variable)** field to specify the variables and their scalar lower limits as space-separated pairs: `field_variable_1 limit_value_1 field_variable_2 limit_value_2`, and so on. For example, to impose a lower limit of 0.25 for the value of a field **u** in Component 1, enter `comp1.u 0.25`.

Lumped Step

The **Lumped Step** node ( ) is available when using the Segregated attribute node. This step is intended for speeding up the computation of any L_2-projections, stemming from the identity operator, appearing as a single physics interface within a multiphysics problem. Using the lumped step approximates the Jacobian matrix resulting from finite element discretization when solving the linear system for the unknown field variables. The approximation consists of replacing the Jacobian by a diagonal matrix with row sums. In doing so, take care to ensure that the resulting approximate Jacobian is invertible (nonsingular).

Multigrid

The **Multigrid** solver ( ) is used to set up a geometric multigrid (GMG) solver or an algebraic multigrid (AMG) solver. Right-click the Iterative, Krylov Preconditioner, Presmoother, Postsmoother, or Coarse Solver attribute node to add a **Multigrid** solver.

	Linear in the *COMSOL Multiphysics Programming Reference Manual*

GENERAL

Select a multigrid **Solver**: **Geometric multigrid** (the default), **Algebraic multigrid**, or **Smoothed aggregation AMG**. The smoothed aggregation AMG (SAAMG) solver is mainly intended for linear elasticity problems when geometric multigrid cannot be used or when classical algebraic multigrid performs poorly. That method works by clustering nodes of degrees of freedoms into aggregates based on a connection criterion. Each aggregate then becomes a new node on the next multigrid level, and the algorithm proceeds until a certain number of levels has been reached or until the number of degrees of freedoms is sufficiently small.

For either choice, enter the:

- **Number of iterations**. The default is 2.
- Select a **Multigrid cycle**: **V-cycle** (the default), **W-cycle**, or **F-cycle**. For **Multigrid cycle**, the settings are the same as for the geometric multigrid (GMG) and algebraic multigrid (AMG) solvers.
- Enter the **Number of multigrid levels** to generate (the default is 1 for **Geometric multigrid** and 5 for **Algebraic multigrid**).

Geometric Multigrid

Select an option from the **Hierarchy generation method** list to specify how to generate the multigrid levels:

- **Lower element order first (any)**. The default. Generates first a multigrid level by lowering the order (by one) of any of the used shape functions. If there are no shape functions that can be lowered, the mesh is coarsened.
- **Coarsen mesh and lower order**. Combines lowering of the used shape function order and a coarsening of the mesh.
- **Lower element order first (all)**. Generates a multigrid level by lowering the order (by one) of all the used shape functions. If this is not possible, the mesh is coarsened.
- **Coarsen mesh**. Does not change the order.
- **Lower element order and refine (all)**. Generates a multigrid level by lowering the order (by one) of all the used shape functions. If this is not possible, the mesh is refined a number of times. The mesh solved for can, with this method, be a finer one than the one selected under the study node.
- **Lower element order and refine (any)**. Generates a multigrid level by lowering the order (by one) of any of the used shape functions. If there are no shape functions that can be lowered, the mesh is refined. The mesh solved for can, with this method, be a finer one than the one selected under the Study node.
- **Refine mesh**. Does not change the order.
- **Manual**. Use this setting to select a multigrid level from the existing ones. You then specify the multigrid level to use in the **Use multigrid level** list. Use the **Move Up** ( ), **Move Down** ( ), **Delete** ( ), and **Add** ( ) buttons to configure the list of multigrid levels. Use the **Assemble on coarse level** check box to assemble the discrete differential operators on the coarse multigrid level (selected by default).

For any **Hierarchy generation method** (except Manual), additional settings are available:

- In the **Use hierarchy in geometries** list, select the geometries to apply the multigrid level to. Use the **Move Up** ( ), **Move Down** ( ), **Delete** ( ), and **Add** ( ) buttons to configure the list of geometries.
- The **Assemble on all levels** check box is selected by default to assemble the discrete differential operators. Otherwise, these operators are formed using the restriction and prolongation operators. Click to clear the check box as needed.

When **Coarsen mesh and lower order**, **Lower element order first (all)**, **Lower element order first (any)**, or **Coarsen mesh** are selected from the **Coarse level generation method** list, select the **Keep generated multigrid levels** check box to save the meshes for all levels under the mesh node.

Select the **Prefer the free matrix format** check box to automatically choose the matrix free format, which can save memory.

See alsoThe Geometric Multigrid Solver/Preconditioner for more information.

	The Coarse Level options are described for the Direct node. If **None** is selected, no coarse mesh is used in addition to the fine mesh. This can lead to severe reduction in convergence rate but saves memory.

Algebraic Multigrid

For **Algebraic multigrid**, see The Algebraic Multigrid Solvers/Preconditioners for more information. In addition to the settings above, the following settings control the automatic construction of the multigrid hierarchy:

- Enter a **Maximum number of DOFs at coarsest level**. The default is 5000. Coarse levels are added until the number of DOFs at the coarsest level is less than the max DOFs at coarsest level or until it has reached the number of multigrid levels.

- Enter a value or use the slider to set the **Quality of multigrid hierarchy**. Higher quality means faster convergence at the expense of a more time consuming setup phase. For instance, if the linear solver does not converge or if it uses too many iterations, try a higher value to increase the accuracy in each iteration, meaning fewer iterations. If the algebraic multigrid algorithm runs into memory problems, try a lower value to use less memory. The range goes from 1 to 10, where 10 gives the best quality. The default is 3.
- The **Lower element order first (any)** check box is selected by default. This setting provides the combination of GMG with lower order until order 1 is reached and then uses AMG to generate the coarser levels. The **Assemble on the order-lowered levels** check box, which is selected by default, then corresponds to the GMG option top assemble on all level. Using this setting is equivalent to using GMG with AMG as a coarse grid solver.

Smoothed Aggregation AMG

For **Smoothed aggregation AMG** (SAAMG), which is a version of AMG that works well alternative for CFD and other problems where GMG works well but is more robust in the sense that only one valid mesh is needed.

The following settings control the aggregation algorithm:

- Enter a **Maximum number of DOFs at coarsest level**. The default is 5000. Coarse levels are added until the number of DOFs at the coarsest level is less than the max DOFs at coarsest level or until it has reached the number of multigrid levels.
- The aggregation algorithm is based on a connection criterion, which you specify as a coefficient in the **Strength of connections** field. A node j is connected to another node i, if $\|A_{ij}\| \geq \varepsilon \|A_{ii}\| \|A_{jj}\|$ where ε is the strength of connection coefficient, and A_{ij} is the submatrix of the stiffness matrix defined by the degrees of freedoms on node i and j, respectively. Loosely speaking, the strength of connection value determines how strongly the aggregation should follow the direction of anisotropy in the problem. The default value is 0.01.
- From the **Null-space vectors** list, choose **Constant** (the default) or **Rigid body modes**. For linear elasticity problems, always select **Rigid body modes** because it enhances the convergence properties significantly.
- Select the **Construct prolongators componentwise** check box for CFD applications and other not strongly coupled physics. It is selected by default in predefined solver suggestions for CFD. This setting is only available when the **Null-space vectors** settings is set to **Constant**.
- The **Compact aggregation** check box is selected by default to use an aggregation algorithm that forms, on average, smaller aggregates, which leads to a less rapid coarsening.
- By default, the **Reuse prolongators** check box is selected to avoid computing the prolongator matrix P when an old prolongator can be reused.
- Choose how to control the prolongator smoothing using the **Smoothing** list, which is active when the **Prolongator smoothing** check box (selected by default) is selected. The **Auto** option postpones the smoothing for `sdim-1` levels, where `sdim` is the space dimension of the problem. If you choose **Manual**, enter the level to start smoothing at in the **Start smoothing at multigrid level** field.
- The final transfer operator, P, between the fine and coarse problems are smoothed by one application of Jacobi smoothing:

$$P = (I - \omega D^{-1} A_F)\tilde{P}$$

  where ω is the *Jacobi damping factor*, A_F is the *filtered stiffness matrix*, and D is the diagonal of A_F. Specify ω in the **Jacobi damping factor** field. The default value is $2/3$.
- By default, the **Use filtering** check box is selected. Filtering means that entries in the stiffness matrix have been dropped if they correspond to degrees of freedoms on a node that has no strong connections. Loosely speaking, filtering highlights anisotropy in the problem and results in a sparser coarse level problem.
- The **Lower element order first (any)** check box is selected by default. This setting provides the combination of GMG with lower order until order 1 is reached and then uses SAAMG to generate the coarser levels. The

Assemble on the order-lowered levels check box, which is selected by default, then corresponds to the GMG option top assemble on all level. Using this setting is equivalent to using GMG with SAAMG as a coarse grid solver.

Shifted Laplace Contribution (CSL)

If you have selected the **Shifted Laplace contribution** check box to use CSL, then select:

- The **Physics** from the list.
- Add a weak contribution method from the **Add weak contribution** list:
  - **Automatic**: The code internally creates a weak contribution for the selected physics. Specif a **Shift coefficient** relaxation factor (default: 1). The **Automatic** option is only supported for the Helmholtz equation. Select the **Keep generated weak contribution** check box in order to keep the CSL weak contribution feature in the Physics node.
  - **Manual**: Specify the complete weak-form expression in the **Weak expression** field. This expression can be applied to any Physics available in the list above. Select the **Keep generated weak contribution** check box to keep the CSL weak contribution feature in the Physics node.
  - **From physics**: the CSL weak contribution is taken from the Physics node. Only use this option if a weak contribution feature was previously added by selecting the **Keep generated weak contribution** check box together with the **Automatic** or **Manual** options as described above.
  - **Off**: No CSL is added for the selected Physics.

The CSL can be applied on the fine grid and on the multigrid levels independently. The CSL group for the fine grid can be used only if the **Prefer the free matrix format** check box is active. When CSL is used together with GMG, it is possible to specify the **Minimum multigrid level** and **Maximum multigrid level** on which CSL is to be applied. By default, the latter is set to the maximum multigrid level.

	• The Multigrid Solvers • Multigrid Level

Parametric

The **Parametric** node ( ) is an attribute node that handles settings for parameter stepping using a parametric solver. This node can be used together with a Stationary Solver node.

There is also an option to run a Stationary study with an **Auxiliary sweep**, with or without a continuation parameter. When a continuation parameter is selected, the continuation algorithm is run, which assumes that the sought solution is continuous in these parameters. If no continuation parameter is given, a plain sweep is performed where a solution is sought for each value of the parameters. In both cases, a **Stationary Solver** node plus a **Parametric** attribute is used. The parametric solver is the algorithm that is run when a Parametric attribute node is active under a Stationary Solver. Similarly the adaptive solver is the algorithm that is run when an Adaptive Mesh Refinement node is active under a Stationary Solver.

	In order to run a parametric continuation, select the **Auxiliary sweep** check box under **Study Extensions** for the Stationary or Frequency Domain study step. Then on the study node's **Settings** window, define the parameters in the table and choose one from the **Run continuation for** list.

	• The Adaptive and Parametric Solver Log • The Parametric Solver Algorithm

GENERAL

Select an option from the **Defined by study step** list to specify if the settings are synchronized with the Stationary or Frequency Domain study step, in which case this section does not require any input. The **Run continuation for** list also displays the same settings made under **Study Extensions**.

	The continuation algorithm is used if a parameter is selected. Normally the step size, damping, and predictor settings are automatic. If required, you can edit the settings in the **Continuation** section described next.

To edit the settings, select **User defined** to modify the sweep type, parameter table, reuse solution from previous step setting, and the parameter to run continuation for. These settings are the same as described in Common Study Step Settings under **Study Extensions**.

	Exactly how the parameter values are used by the solver is determined by the **Sweep type** and the option **Parameters to store** in the **Output** section as described below. If more than one parameter name is specified, the lists of parameter values are interpreted as follows. Assume that the parameter names are `p1` and `p2`, and that `p1` has the list 1 3 and `p2` has the list 2 4: • For **Specified combinations**, the solver first uses `p1` equal to `1` and `p2` equal to `2`. Thereafter, it uses `p1` equal to `3` and `p2` equal to `4`. • For **All combinations**, the solver uses this order for the parameter combinations: 1 2, 1 4, 3 2, and 3 4.

To determine what the solver does when there is a solver error or when the continuation backtracking fails, select an option from the **On error** list. Select one of the following options:

- **Stop** (the default) to stop the parametric sweep and only return solutions before the error.
- **Store empty solution** to continue the parametric sweep and store an empty (NaN) solution for this step (or for the remaining continuation).

	Using **Store empty solution** can be useful if you need to sweep over many different combinations of parameters and it is unknown which ones that will solve. It can also be useful when doing frequency sweeps where frequencies close to resonances fail.

From the **Parameter value run order** list choose **Automatic** (the default) or **As specified**. When using As specified, the specified order of the parameter values is used. When you use the **Automatic** setting, the parametric solver performs an analysis of the cost of changing the values of involved parameters, and the run order of the parameter values is modified when it is found to be more efficient. If the parameter run order is modified, the modified order is indicated in the **Log** window.

CONTINUATION

By default the solver selects the parameter steps automatically based on the values entered in the **Parameter values** field in the **General** section.

Click to select the **Tuning of step size** check box to edit these settings:

- **Initial step size** field to enter a positive number that determines the magnitude of the first parameter step.

- **Minimum step size** field to specify a safeguard against too small parameter steps.
- **Maximum step size** field to specify an upper bound on the parameter step size. Use this if you suspect that the solver tries to take unnecessarily long steps.

Use the **Use initial damping factor for all parameter steps** list to control the initial damping factor for the nonlinear solvers for the parameter steps.

- Select **On** to use the given **Initial damping factor** for the nonlinear solvers for all parameter steps.
- Select **Off** to use the initial damping factor only for the first parameter step.
- Select **Automatic** (default) to use the initial damping factor only for the first parameter step when the **Automatic (Newton)** or **Automatic highly nonlinear (Newton)** nonlinear solver method is used in the Fully Coupled solver node and use the initial damping factor in all steps for other solver combinations.

Use the **Predictor** list to control how the initial value for the next parameter value is determined. Select:

- **Automatic** (the default) to let the parametric solver choose a constant or linear predictor based on the type of stationary solver (a constant predictor for segregated solvers and a linear predictor for fully coupled solvers).
- **Constant** to use the solution for the present parameter value as initial guess.
- **Linear** to compute the initial guess by following the tangent to the solution curve at the present parameter value.

	This option is overridden, and **Constant** used instead if you are solving for more than one parameter (that is, when you have entered more than one parameter name in the **Parameter name** field).

LOAD CASE

This section displays the settings made under **Study Extensions** for the Stationary study step; it is synchronized with the study settings.

LEAST-SQUARES DATA

	The section only appears if your license includes the Optimization Module and you are solving a least-squares optimization problem with defined parameters.

Least-squares data are read from file, and the solver sequence is set up accordingly: If there is a least-squares objective containing parameter columns or experimental parameters, a Parametric solver is set up, and the parameter names and values appear under **Least-squares data from file**.

Parameter values corresponding to the same parameter names are merged between different files. If **Use least-squares parameters from files** is on (which is the default), user-defined parameter values are merged with corresponding merged data from files. For parameters that are defined only in files and not user defined (and vice versa), globally defined values are used.

General parameter values list here refers to the list of parameters in the **General** section above. If **Exclude values outside General parameter value lists** is on (which is the default), only least-squares parameter values from files that lie between the smallest and the largest user-defined parameter values are merged. Other values are ignored. Otherwise (that is, **Exclude values outside General parameter value lists** is off), all least-squares defined parameter values are merged.

In the case of no user-defined parameters, the merging is done between files only.

If **Use least-squares parameters from files** is off, no least-squares parameters from files are used.

You can change the default values of **Use least-squares parameters from files** and **Exclude values outside General parameter value lists** only if **Defined by study step** is set to **User defined**.

OUTPUT

Use the **Parameters to store** list to control at what parameter values the solver stores a solution. Select:

- **Steps given** to store solutions at the parameter values entered in the **Parameter values** field in the **General** section.
- **Steps taken by solver** to store solutions at all parameter values where the solver has computed a solution. This option can generate solutions in-between the values specified by the **Parameter values** field in the **General** section if the solver needs to take shorter steps than specified by the values in that field.

RESULTS WHILE SOLVING

See Results While Solving in the Common Study Step Settings section. Also see Getting Results While Solving.

CLUSTER SETTINGS

Select the **Distribute parameters** check box to distribute the parameters on several computational nodes. If the problem is too large to run on a single node, you can enable the **Maximum number of groups** field to use the nodes' memory more efficiently. In this case, the same parameter is solved for by several nodes that cooperate as if running a nondistributed sweep. The number of nodes that cooperate is equal to the maximum of the total number of nodes divided by the **Maximum number of groups** setting and 1. So if the total number of nodes is 12 and the **Maximum number of groups** is 3, then 3 groups with 4 nodes each cooperate.

	Buoyancy Flow of Free Fluids: Application Library path **COMSOL_Multiphysics/Fluid_Dynamics/buoyancy_free**

Postsmoother

The **Postsmoother** node ( ) is an auxiliary attribute node used by the Multigrid attribute node. This attribute does not have any settings. Instead, its purpose is to administrate postsmoothers for a multigrid solver.

Presmoother

The **Presmoother** node ( ) is an auxiliary attribute node used by the Multigrid attribute node. This attribute does not have any settings. Instead, its purpose is to administrate presmoothers for a multigrid solver.

Previous Solution

The **Previous Solution** node ( ) is an optional attribute node of the Parametric attribute node and the Time-Dependent Solver node. It handles field variables that have to be accessed at a previous parameter value or time. In time-dependent studies, it can be useful for time-dependent contact problems with friction, for example.

Use the **Variables** list to specify which variables to associate with the previous parameter value or time step rather than the present one.

Use the **Linear solver** list to select a solver for the linear systems associated with the quantities specified by **Variables**. The available solvers are of the types Direct, Iterative, and **Lumped**. The **Lumped** option provides the same functionality as the Lumped Step for the **Segregated** attribute node, applied to all variables specified in the **Variables** list in the **Previous Solution** node's settings.

As a subnode for a **Time-Dependent Solver** node, there is a **Damping factor** check box (cleared by default) and an associated input field allowing a value between 0 and 1 (default: 1). If selected, the damped $u_{\text{prev}}(t_{n+1})$ is equal to $u_{\text{prev}}(t_n) + \text{damping\_factor}(u_{\text{prev}}(t_{n+1}) - u_{\text{prev}}(t_n))$.

Sparse Approximate Inverse (SAI)

The **Sparse Approximate Inverse (SAI)** node ( ) is an attribute that handles the *sparse approximate inverse* (SAI or SPAI) preconditioner, pre- and postsmoother, and coarse solver. The SAI preconditioner is an explicit preconditioner that approximates the inverse of the system matrix and not the system matrix itself (which, for example, ILU and SOR do). The advantage of the SAI approach is that the preconditioner can be applied in terms of matrix-vector multiplications, which can be processed efficiently and in parallel. The construction can be costly, but it can be run in parallel providing good parallel scalability even for higher core counts. The SAI preconditioning efficiency is sometimes not as good as the one of ILU or SOR (in terms of reductions of the solver iteration count); however, the SAI preconditioner can be more problem-aware and can be fitted well to specific problems such as anisotropic grids and operators. The SAI preconditioner is useful in the context of BEM methods, for example. See The Sparse Approximate Inverse (SAI) Preconditioner for more information.

You can add an **Sparse Approximate Inverse (SAI)** node as a subnode to the following nodes in a solver sequence: **Iterative**, **Iterative> Krylov Preconditioner**, **Multigrid>Presmoother** and **Multigrid>Postsmoother,** and **Domain Decomposition (Schwarz)>Coarse Solver** and (for both Schwarz and Schur domain decomposition) **Domain Decomposition>Domain Solver**.

The **Settings** window includes the following section:

GENERAL

From the **Preconditioning** list, select **Automatic** (the default), **Left**, or **Right**. You can select a preconditioning from the left or right for a nonsymmetric matrix, for example, where a preconditioner from the right might not work well for left preconditioning and vice versa.

From the **Sparsity pattern based on** list, select **Matrix** (the system matrix and the default setting), or select **Power of matrix** to base the sparsity pattern on the power of the system matrix, which you specify as a positive integer in the **Order of power** field (default: 2).

	The cost and preconditioning efficiency increases with the order of the power.

In the **Maximum column size factor** field, you can specify a maximum columns size factor (default: 5), to limit the maximum number of nonzero elements of each column in the SAI preconditioner matrix. This limitation can be important for BEM models with conditions at infinity.

From the **Preconditioner symmetry** list, choose **Automatic** (the default) to make the COMSOL Multiphysics software automatically determine and make use of symmetries in the preconditioner. Alternatively, you can enforce the symmetry characteristics of the preconditioner by choosing **Nonsymmetric**, **Symmetric**, or **Hermitian**.

Enter a fill ratio between 1 (the default) and 100 in the **Fill ratio** field (or use the slider underneath). The fill ratio determines how much a column is allowed to grow outside of the nonfill elements in the matrix pattern.

Specify the number of iterations for the SAI preconditioner in the **Number of iterations** field (default: 2).

Specify a scalar **Relaxation factor**. The allowed values of this factor are between 0 and 2 (default: 1). Enter a **Relaxation factor** to specify a scalar relaxation factor ω. The allowed values of this factor are between 0 and 2. The default is 1. See About the Relaxation Factor for more information.

The **Blocked version** check box is selected by default. The SAI preconditioner then searches for repeated sparsity patterns with respect to the columns during the setup phase. For the same pattern only, a single LSQ system is set up and solved for multiple right-hand sides instead of multiple distinct LSQs, thereby significantly reducing the setup overhead.

Sparse Localized Schur

The **Sparse Localized Schur** node ( ) is an attribute to a Schur Solver. This node is added by default, together with a **Direct** solver subnode. The **Sparse Localized Schur** node (in contrast to the alternative Localized Schur node) filters out small matrix elements and can therefore use all solvers, which you can add by right-clicking the **Sparse Localized Schur** node if you want to use another solver than the default **Direct** solver.

Use the **Drop tolerance** field to tune the maximum allowed sizes of dropped (neglected) elements (default: 0.001). A smaller drop tolerance means that the sparse localized Schur solver drops fewer elements and so it becomes more accurate (if it is set to 0, the Sparse Localized Schur node behaves like the Localized Schur node). This leads to fewer iterations in the Schur solver, but memory requirements and preconditioning time increase. A larger drop tolerance means that the filtering drops more elements and so memory use and solution time decrease. In this case, however, the Schur solver becomes less accurate, which leads to more iterations, or, if the drop tolerance is too high, to no convergence at all. Often it is most efficient to use as high a drop tolerance as possible; that is, choose it so that the Schur solver barely converges.

Use the **Termination technique** list to select how to terminate the solver. Select:

- **Fixed number of iterations** (the default) to perform a fixed number of iterations each time the **Schur Solver** is used.
- **Use tolerance** to terminate the **Schur Solver** when a tolerance is fulfilled.
- **Iterations or tolerance** to terminate when the estimated tolerance is smaller than a specified tolerance or after a specified number of iterations, whichever comes first.

Further options that apply to the selection (as indicated at each bullet) made in the **Termination technique** list are:

- **Number of iterations** (available when **Termination technique** is set to **Fixed number of iterations** or **Iterations or tolerance**). Use this field to specify the fixed number of iterations to perform (default: 2).
- **Relative tolerance** (available when **Termination technique** is set to **Use tolerance** or **Iterations or tolerance**). Use this field to specify the termination tolerance (default: 0.1).
- **Maximum number of iterations** (only available when **Termination technique** is set to **Use tolerance**). Use this field to enter a maximum number of iterations that the solver is allowed to take (default: 10). When this number of iterations has been performed without reaching the tolerance specified in the **Relative tolerance** field, the solver automatically stops with an error message.

SCGS

The **SCGS** node ( ) is an attribute that handles the SCGS (symmetrically coupled Gauss-Seidel) solver, which is useful as a preconditioner for solving the Navier-Stokes equations and similar fluid flow problems. See The SCGS Solver for more information.

The **Settings** window includes the following sections:

MAIN

Settings When Not Used With Coarse Solver

If a Coarse Solver is not used, enter the **Number of iterations** to specify a fixed number of iterations to perform when this attribute node is being used as a preconditioner or smoother (default: 2).

Settings When Used With Coarse Solver

Use the **Termination technique** list to select how to terminate the solver. Select:

- **Fixed number of iterations** (the default) to perform a fixed number of iterations each time the **Coarse Solver** is used.
- **Use tolerance** to terminate the **Coarse Solver** when a tolerance is fulfilled.
- **Iterations or tolerance** to terminate when the estimated tolerance is smaller than a specified tolerance or after a specified number of iterations, whichever comes first.

Further options that apply to the selection (as indicated at each bullet) made in the **Termination technique** list are:

- **Number of iterations** (available when **Termination technique** is set to **Fixed number of iterations** or **Iterations or tolerance**). Use this field to specify the fixed number of iterations to perform (default: 10).
- **Relative tolerance** (available when **Termination technique** is set to **Use tolerance** or **Iterations or tolerance**). Use this field to specify the termination tolerance (default: 0.1).
- **Maximum number of iterations** (only available when **Termination technique** is set to **Use tolerance**). Use this field to enter a maximum number of iterations that the solver is allowed to take (default: 500). When this number of iterations has been performed without reaching the tolerance specified in the **Relative tolerance** field, the solver automatically stops with an error message.

Settings When Used With Any Attribute Node

Use the **Relaxation factor** field to specify a scalar relaxation factor ω. The allowed values of this factor are between 0 and 2 (default: 0.8). See About the Relaxation Factor for more information.

Use the **Block solver** list to specify how to solve the Vanka block linear systems by selecting one of these options:

- **Direct, stored factorization** (the default) to store the factorization. If two SCGS smoothers are used as presmoother and postsmoother of a Multigrid solver, with similar enough settings, they share the same stored factorization, which means that they only use half the memory.
- **Direct** to use a direct solver. The direct solver is slower than the default option to store the factorization, but it uses less memory.
- **Iterative, GMRES** to use the iterative method GMRES.

If you use the SCGS algorithm as preconditioner, or as a smoother to a multigrid preconditioner when either of GMRES, Conjugate gradients, BiCGStab, or TFQMR is used as the linear system solver, use the **Direct, stored factorization** or the **Direct** option in the **Block solver** list in order to get a stationary preconditioner.

The **Iterative, GMRES** option in the **Block solver** list can be useful if you use the FGMRES method as a linear system solver because it can handle preconditioners that are not stationary. The GMRES option can also be useful if you use the SCGS algorithm as a smoother to a multigrid solver because GMRES can in some cases be faster than the direct solver if set to a high tolerance, although this advantage is less pronounced with SCGS than Vanka due to the smaller block size used by SCGS.

When **GMRES** has been selected in the **Block solver** list, the following options become available. Use the **Tolerance** field to specify the termination tolerance of GMRES (default: 0.02). Use the **Number of iterations before restart** field to specify how many iterations the solver should take between each restart (default: 100).

From the **Method** list, select one of the following methods (see above):

- **Mesh element lines and vertices** (the default)
- **Mesh elements**
- **Mesh element lines**

Select the Vanka check box and then use the **Variables** list to specify variables to include in a Vanka block approach.

Select the **Blocked version** check box (selected by default) to use a version of the SCGS method that is optimized for parallel computations.

Select the **Reuse data** check box (selected by default) to reuse the data in the blocks that define the SCGS method. SCGS is a mesh-based method, so formally this performance enhancement is possible as soon as the mesh is the same.

SECONDARY

Use the **Number of secondary iterations** field to specify the number of SSOR iterations (default: 1) to perform for degrees of freedom not involved in the SCGS blocks.

Use the **Relaxation factor** field to specify a scalar relaxation factor for the iterations specified in the **Number of secondary iterations** field (default: 1). The allowed values of this factor are between 0 and 2 (default: 0.5). See About the Relaxation Factor for more information.

Schur Solver

The **Schur Solver** node ( ) is an auxiliary attribute subnode used by the Domain Decomposition (Schur) attribute node. This node does not have any settings. Instead, its purpose is to administrate domain solvers for a domain-decomposition Schur solver.

Segregated

The **Segregated** node ( ) is an attribute that handles parameters for a segregated solution approach. This attribute makes it possible to split the solution process into substeps. Each substep uses a damped version of Newton's method.

The attribute can be used together with the Stationary Solver and Time-Dependent Solver nodes. An alternative to the segregated approach is given by the coupled solver, which is handled with the Fully Coupled attribute node. Although several **Fully Coupled** and **Segregated** attribute nodes can be attached to an operation node, only one can be active at any given time.

To add substeps to a segregated iteration, right-click the **Segregated** node. One segregated iteration consists of executing each active Segregated Step in the order shown in the model tree.

	The convergence properties of a model might depend on the order of the segregated steps. You can move the Segregated Step nodes to change the order in which the solver runs each step.

	Using the segregated solver, you can impose lower limits and upper limits for the field variables by adding **Lower Limit** and **Upper Limit** subnodes. See Lower Limit and Upper Limit.

For more information about the settings below, see:

- The Segregated Solver
- Damped Newton Methods
- Pseudo Time Stepping
- Termination Criterion for the Fully Coupled and Segregated Attribute Nodes

GENERAL

Select a **Termination technique** list to control how the segregated iterations are terminated. Select:

- **Tolerance** (the default) to terminate the segregated iterations when the estimated relative error is smaller than a specified tolerance.
- **Iterations or tolerance** to terminate the segregated iterations when the estimated tolerance is smaller than a specified tolerance or after a specified number of iterations, whichever comes first.
- **Iterations** to terminate the segregated iterations after a fixed number of iterations.

Then, based on the selected **Termination technique**, use the following settings:

- If **Tolerance** is selected, enter a **Maximum number of iterations** to limit the number of segregated iterations (default: 10). When the maximum number of iterations has been performed, the segregated method is terminated even if the tolerance is not fulfilled.
- If **Tolerance** or **Iterations or tolerance** is selected, enter a **Tolerance factor** to modify the tolerance used for termination of the segregated iterations. The actual tolerance used is this factor times the value specified in the **Relative tolerance** field in the **General** sections of the **Stationary Solver** and **Time-Dependent Solver** nodes.
- If **Tolerance** or **Iterations or tolerance** is selected, choose a **Termination criterion** to control how the Newton iterations are terminated for stationary problems. Select:
  - **Solution** to terminate the Newton iterations on a solution-based estimated relative error.
  - **Residual** to terminate the Newton iterations on a residual-based estimated relative error.
  - **Solution or residual** to terminate the Newton iterations on the minimum of the solution-based and residual-based estimated relative errors. Then enter a scalar **Residual factor** (default: 1000) that multiplies the residual error estimate.
- If **Iterations** or **Iterations or tolerance** is selected, enter a **Number of iterations** to specify a fixed number of iterations to perform. The default is 1.

With a Time-Dependent Solver, also select the **Limit on nonlinear convergence rate** check box to force the nonlinear solver to terminate as soon as the convergence is estimated to be too slow. Enter a limit on the convergence rate in the accompanying field.

You can select one of the following methods for stabilization and acceleration of the nonlinear convergence from the **Stabilization and acceleration** list:

- **None** (the default) to not use any stabilization or acceleration method.
- **Pseudo time-stepping** to use a pseudo time-stepping method to stabilize convergence toward steady state for a stationary solver. Pseudo time stepping is not available for time-dependent solvers. See Pseudo Time Stepping for more information. For the pseudo time-stepping method, specify the following controller parameters:
  - **Initial CFL number**. The default is 5.
  - **PID controller - proportional**. The default is 0.65.
  - **PID controller - integral**. The default is 0.05.
  - **PID controller - derivative**. The default is 0.05.
  - **Target error estimate**. The default is 0.1.
  - Select the **Anderson acceleration** check box to activate Anderson acceleration for the pseudo time-stepping method. See below.
  - Select the **Override Jacobian update for steps** check box to override updates of the Jacobian for the segregated steps. The **CFL threshold** value (default: 100), which is the value of the CFL number where overriding of the Jacobian update becomes active. From the **Jacobian update** list, choose **On first iteration** (the default) or

Minimal, which updates the Jacobian at least once and then only when the nonlinear solver fails during parameter stepping. It reuses the Jacobian for several nonlinear systems whenever deemed possible.

- **Anderson acceleration**, which is a nonlinear convergence acceleration method that uses information from previous Newton iterations to accelerate convergence. The Anderson acceleration method is primarily intended for acceleration of nonlinear iterations in transport problems involving, for example, crosswind diffusion stabilization. It is useful is for solving linear or almost linear problems using the segregated solver, where convergence can be improved and the performance increased. You can control the number of iteration increments to store using the **Dimension of iteration space** field (default: 10) and the mixing parameter as a value between 0 and 1 using the **Mixing parameter** field (default: 1.0). The **Iteration delay** field (default 0) contains the number of iterations between pseudo time stepping becomes inactive and Anderson acceleration becomes active. When used for pseudo time stepping, you can also enter a **CFL threshold** value (default: 100), which is the value of the CFL number where Anderson acceleration becomes active and pseudo time stepping becomes inactive.

RESULTS WHILE SOLVING

See Results While Solving in the Common Study Step Settings section. Also see Getting Results While Solving.

Segregated Step

The **Segregated Step** node ( ) handles settings for one substep of a segregated iteration. This attribute uses a damped version of Newton's method and can be used together with a Segregated attribute node.

For more background information about the method and termination settings, see The Segregated Solver and Damped Newton Methods.

GENERAL

Use the **Variables** list to specify variables to be solved for in this segregated step.

Select a **Linear solver** for the linear systems associated with the quantities specified by **Variables**. The available solvers are attribute nodes of the types Direct and Iterative.

METHOD AND TERMINATION

See the Fully Coupled **Method and Termination** section for all settings except for the following, which has a slightly different behavior as described:

For a Time-Dependent Solver, if **Constant (Newton)** is selected as the **Nonlinear method**, choose a **Jacobian update**: **Minimal** (the default), **On every iteration**, or **Once per time step**:

- **On every iteration** computes a new Jacobian for all iterations of Newton's method.
- **Minimal** updates the Jacobian at least once and then only when the nonlinear solver fails during time stepping. It reuses the Jacobian for several nonlinear systems whenever deemed possible.
- **Once per time step** updates the Jacobian once per time step.

For a Stationary Solver or a parametric solver, if **Constant (Newton)** is selected as the **Nonlinear method**, choose a **Jacobian update**: **Minimal** (the default), **On every iteration**, or **Once first iteration**:

- **On every iteration** computes a new Jacobian for all iterations of Newton's method.

- **Minimal** updates the Jacobian at least once and then only when the nonlinear solver fails during parameter stepping. It reuses the Jacobian for several nonlinear systems whenever deemed possible.
- **On first iteration** updates the Jacobian for the first subiteration for this segregated step.

The pseudo time stepping settings are not applicable for this node.

Sensitivity

A **Sensitivity** solver node ( ) solves a sensitivity analysis problem set up in The Sensitivity Interface.

Also see The Sensitivity Analysis Algorithm. Sensitivity analysis for time-dependent problems is available with the Optimization Module.

GENERAL

In the **Objective** field, specify the objective to use for the sensitivity analysis.

From the **Sensitivity method** list, choose one of the following options:

- **Adjoint** — The adjoint method solves for the derivatives of a single scalar objective function with respect to any number of sensitivity variables.
- **Forward** — The forward sensitivity method solves for the derivatives of all dependent variables and an optional scalar objective function with respect to a small number of sensitivity variables.
- **Forward numeric** — This method is a variant of the forward sensitivity method where the right-hand side of the sensitivity problem is computed by numerical differentiation.

See also Choosing a Sensitivity Method.

SOR

The **SOR** node ( ) handles settings for the SOR (successive over-relaxation) iterative method. Right-click the Iterative, Krylov Preconditioner, Presmoother, Postsmoother, or Coarse Solver attribute nodes to add an **SOR** node.

See The SOR Method for more detailed information about this feature.

GENERAL

Settings When Used With Any Attribute Node

Use the **Solver** list to specify which variant of the SOR algorithm to use. Select:

- **SSOR** (the default) to use the symmetric SOR algorithm, which in each iteration performs one **SOR** sweep followed by one **SORU** sweep.
- **SOR** to use the forward SOR algorithm.
- **SORU** to use the backward SOR (SORU) algorithm.

Specify a scalar **Relaxation factor** ω. The allowed values of this factor are between 0 and 2 (default: 1). See About the Relaxation Factor for more information.

The **Blocked version** check box is selected by default and it uses a blocked version of the SOR method that is optimized for parallel computations. M is then constructed from a column-permuted version of A.

Settings With and Without a Coarse Solver

- If used with a Coarse Solver, select a **Termination technique**. These are described for the SCGS attribute under Settings When Used With a Coarse Solver.
- If a Coarse Solver is not used, enter the **Number of iterations** to specify a fixed number of iterations to perform when this attribute is used as a preconditioner or smoother (default: 2).

	This setting is not considered when the attribute is used as a linear system solver (with the **Use preconditioner** option in the **Solver** list of the Iterative node). The solver then iterates until it has established convergence or has reached the maximal number of iterations as specified by the corresponding Iterative node, rather than perform a fixed number of iterations.

SOR Gauge

The **SOR Gauge** node ( ) handles settings for the SOR gauge iterative method. This is a method of SOR-type with added functionality, useful as preconditioner/smoother for, for example, 3D magnetostatics in the AC/DC Module discretized with vector elements. In short, the added functionality consists of divergence cleaning for degrees of freedom discretized with vector elements. This node can be used together with the Iterative, Krylov Preconditioner, Presmoother, Postsmoother, or Coarse Solver nodes.

Also see The SSOR Gauge, SOR Gauge, and SORU Gauge Algorithms.

MAIN

Settings When Used With Any Attribute Node

Use the **Solver** list to specify which variant of the SOR Gauge algorithm to use. Each variant first performs one ordinary SOR iteration followed by one or several divergence cleaning iterations. Select:

- **SSOR gauge** (the default) to perform an ordinary **SSOR** iteration followed by divergence cleaning.
- **SOR gauge** to perform an ordinary **SOR** iteration followed by divergence cleaning.
- **SORU gauge** to perform an ordinary **SORU** iteration followed by divergence cleaning.

Specify a scalar **Relaxation factor** ω. The allowed values of this factor are between 0 and 2 (default: 1). See About the Relaxation Factor for more information.

The **Blocked version** check box is selected by default and it uses a version of the SOR Gauge method that is optimized for parallel computations.

Use the **Variables** list to specify variables to include in the divergence cleaning phase of an SOR Gauge iteration. By default, all vector degrees of freedom are included.

Settings With and Without a Coarse Solver

- If used with a Coarse Solver, select a **Termination technique**. These are described for the SCGS attribute under Settings When Used With a Coarse Solver.
- If a Coarse Solver is not used, enter the **Number of iterations** to specify a fixed number of iterations to perform when this attribute is used as a preconditioner or smoother (default: 2). In addition to the initial divergence cleaning, the method performs a number of cleaning iterations in each linear solver iteration. Control the number of such divergence cleaning iterations in the **Number of secondary iterations** field.

SECONDARY

Use the **Number of secondary iterations** field to specify the number of divergence cleaning iterations to perform for each main iteration (default: 1).

SOR Line

The **SOR Line** node ( ) handles settings for the SOR line iterative method. This is a method of SOR type with added functionality useful for, for example, anisotropic meshes. It is a block SOR solver, where the blocks are formed from lines of nodes that are relatively close to each other. In addition, ordinary SSOR iterations are performed for all degrees of freedom after the SOR Line iterations have been performed. This node can be used together with the Iterative, Krylov Preconditioner, Presmoother, Postsmoother, or Coarse Solver nodes. Also see The SOR Line Algorithm.

MAIN

Settings When Used With Any Attribute Node

Use the **Relaxation factor** field to specify a scalar relaxation factor that controls the damping of the block SOR smoothing steps. The allowed values of this factor are between 0 and 2 (default: 0.5). See About the Relaxation Factor for more information.

Use the **Line based on** list to control if the lines of nodes are based on the **Mesh** (the default) or on a **Matrix**. If you select **Matrix**, also define the **Maximum line length** (default: 20). This values determines the maximum length of the lines in number of DOFs for each block.

Use the **Multivariable method** list to control the line updates:

- If **Uncoupled** is selected, each block SOR smoothing step updates a set of degrees of freedom with the same name that are located on a line.
- If **Coupled** is selected (the default), each block SOR smoothing step updates all degrees of freedom located on a line.

For smoothing of the turbulence variables K and ε, **Coupled** is recommended.

The **Blocked version** check box is selected by default and it uses a version of the SOR method that is optimized for parallel computations.

Select the **Reuse data** check box (selected by default) to reuse data in order to improve the efficiency of the SOR Line method. In addition, select the **Reuse lines** (selected by default) check box to also reuse the SOR lines of nodes. Note that when lines are reused as a performance enhancement, it is not fully certain that the optimal lines are used.

Settings With and Without a Coarse Solver

- If used with a Coarse Solver, select a **Termination technique**. These are described for the SCGS attribute under Settings When Used With a Coarse Solver.
- If a Coarse Solver is not used, enter the **Number of iterations** to specify a fixed number of iterations to perform when this attribute is used as a preconditioner or smoother (default: 2).

SECONDARY

Use the **Number of secondary iterations** field to specify the number of SSOR iterations to perform after the SOR Line iterations have been performed (default: 1).

Use the **Relaxation factor** field to specify a scalar relaxation factor that controls the damping of the SSOR updates for the iterations specified in the **Number of secondary iterations** field. The allowed values of this factor are between 0 and 2 (default: 0.7). See About the Relaxation Factor for more information.

SOR Vector

The **SOR Vector** node ( ) handles settings for the SOR vector iterative method. This is a method of SOR type with added functionality useful for electromagnetics problems involving the $\nabla \times (a\nabla \times .)$ curl-curl operator and

where you use *vector elements* (available primarily for electromagnetic wave simulations in the RF Module). In short, the added functionality consists of performing SOR iterations on an auxiliary linear system in addition to the ordinary SOR iterations. This node can be used as preconditioner/smoother together with the Iterative, Krylov Preconditioner, Presmoother, Postsmoother, or Coarse Solver nodes. Also see The SOR Vector Algorithm.

MAIN

Settings When Used With Any Attribute Node

Use the **Solver** list to specify which variant of the SOR Vector algorithm to use. Select:

- **SSOR vector** to perform one ordinary SOR iteration on the main system followed by a number of SSOR iterations on an auxiliary (projected) system and then one ordinary SORU iteration. This is repeated in each SSOR vector iteration.
- **SOR vector** to perform one ordinary SOR iteration followed by a number of SOR iterations on an auxiliary system. This is repeated in each SOR vector iteration.
- **SORU vector** to perform a number of SORU iterations on an auxiliary system followed by one ordinary SORU iteration. This is repeated in each SORU vector iteration.

The algorithms perform these iterations to preserve symmetry as a preconditioner and also when used as symmetric presmoother and postsmoother in a multigrid setting.

Specify a scalar **Relaxation factor** ω. The allowed values of this factor are between 0 and 2 (default: 1). See About the Relaxation Factor for more information.

The **Blocked version** check box is selected by default and it uses a version of the SOR Vector method that is optimized for parallel computations.

Use the **Variables** list to specify variables to be included in the auxiliary system of the SOR Vector method.

Settings With and Without a Coarse Solver

- If used with a Coarse Solver, select a **Termination technique**. These are described for the SCGS attribute under Settings When Used With a Coarse Solver.
- If a Coarse Solver is not used, enter the **Number of iterations** to specify a fixed number of iterations to perform when this attribute is used as a preconditioner or smoother (default: 2). Then use the **Number of secondary iterations** field to specify the number of iterations to perform the auxiliary system for each main iteration (default: 1).

State

The **State** node (u) is an attribute node that handles settings for state variables. A state is composed of a set of ODE variables. Each state has a separate **State** node. This attribute is used together with the Dependent Variables node.

GENERAL

The **State Components** section displays the variable names for the states components. Also, when internal extra variables are used, these are displayed here as **Internal Variables**.

Use the **Solve for this state** check box to control whether to solve for the state or not. This setting is only available if the **Dependent Variables** node's setting **Defined by study step** is set to **User defined**. If the variable is not solved for, its values are determined by the settings in the **Values of Variables Not Solved For** section of the corresponding **Dependent Variables** operation node.

If this state is part of a physics for which a **Model Reduction** node is computing a reduced model that include reduction, you can choose a **Reduced Model** node from the **Reconstruction** list, if you want this state to use another

reconstruction than the rest of the study. This setting is only available if the **Dependent Variables** node's setting **Defined by study step** is set to **User defined** and if the state is a dependent variable such as in an ODE.

Use the **Store in output** check box to control whether to store the variable in any output solution or not.

	A variable can still be solved for despite not being stored in output and vice versa.

SCALING

Control the scaling of a variable with the **Method** list.

	Specifying a **Method** for a variable here overrides the **Method** selected in the **Scaling** section of the corresponding **Variables** operation node unless **From parent** is selected.

Select:

- **Automatic** to get an automatically determined scaling.
- **From parent** to use the scaling type selected in the **Method** list in the **Scaling** section of the corresponding **Variables** operation node.
- **Initial value based** to get a scaling that is determined from the initial values. Use this if the components of the initial values give a good estimate of the order of magnitude of the solution.
- **Manual** to manually enter a scaling. Then enter a value in the **Scale** field.
- **None** to get no scaling.

Stationary Acceleration

The **Stationary Acceleration** subnode ( ) can be useful to accelerate the solution process for nonlinear problems with a time-periodic stationary solution. You can add it as a subnode to all Time-Dependent Solver and Time Discrete Solver nodes. Instead of time-marching the problem from start to finish, the Stationary Acceleration node solves for a number of periods and then extrapolates the solution forward in time based on the average solution and the average time derivative. This solution process is repeated until the average time derivative has reached steady state.

	The **Stationary Acceleration** node can be used to speed up the solution process for some types of plasma models, but it is not used by default for any physics interfaces.

STATIONARY ACCELERATION

- In the **Variables** list, add the dependent variable for which you want to use stationary acceleration. Click the **Add** button ( ) to open an **Add** dialog box that contains all dependent variables in the study. Select the variables that you want to add and then click **OK**. You can also delete variables from the list using the **Delete** button ( ).
- From the **Components** list, select the dependent variables for which the stationary acceleration performs the averaging and extrapolation. Select **All** (the default) to perform averaging and extrapolation for all variables, or select **Manual** to select the variables that you want to apply stationary acceleration from the list that appears.
- In the **Frequency** field, enter the frequency of the periodic solution. The default value, 13.56 MHz, is a frequency that is commonly used for plasma processes.
- In the **Stationary tolerance** field, enter the tolerance used to terminate the outer acceleration iterations, when the average time derivatives are small enough (default value: 0.01).

- In the **Number of extrapolation cycles** field, enter the number of periodic cycles used to extrapolate the solution (default value: 50). The higher this number is, the more the solution process is accelerated, but at the same time the process can lead to an unstable acceleration iteration process.
- In the **Number of period averaging cycles** field, enter the number of cycles over which the stationary acceleration takes the average (default value: 5).
- In the **Number of smoothing cycles** field, enter the number of cycles that the stationary acceleration solves for in each iteration of the acceleration scheme (default value: 10). The average is taken over the last cycles.

Stop Condition

The **Stop Condition** node ( ) stops the solver when any of the specified conditions are fulfilled. It is an optional attribute subnode to the Parametric, Time-Dependent Solver, and Time Explicit Solver nodes.

StopCondition in the *COMSOL Multiphysics Programming Reference Manual*.

STOP EXPRESSIONS

Use the table to specify expressions for the conditions that define when the solver should stop. The solver evaluates the active expressions after each time step or parameter step. The setting in the **Stop if** column of each expression determines how it is evaluated. For **True (>=1)** (the default), the stepping stops if the real part is greater or equal to one, which is useful when entering logic expressions that evaluate to a Boolean true or false (`comp1.EndTerminal(comp1.phis)<2.4`, for example). For **Negative (<0)**, the stepping stops if the real part of the expression becomes negative (`comp1.intop1(comp1.T)-360`, for example). Another example of a stop condition is `timestep<0.04`, which makes the solver stop when the internal time step drops below 0.04 s (when the time-dependent solver hits a sharp transient, for example). To use such logical expressions, use the **True (>=1)** setting. Use the **Active** column to control which stop conditions that are active by selecting or clearing the corresponding check box. The solver stops when any of the active conditions is fulfilled. Optionally, you can enter a suitable **Description** for the stop condition. The description is included in the message that appears in a **Warning** node when the stop condition is fulfilled.

You need to use the COMSOL Multiphysics variable scoping and namespace to access variables defined under Component 1, for example, using `comp1.T` instead of just `T`, and so on. See Variable Naming Convention and Namespace.

STOP EVENTS

This section is available when the **Stop Condition** node is an attribute of the Time-Dependent Solver operation node. This is because events are only supported for time-dependent solvers. Events are then useful for stopping a simulation at the point where the event occurs, which is usually more exact than using a stop condition.

Use the **Implicit event** table to specify at which events the solver should stop. All implicit events defined in the model automatically appear in the table. The stepping stops when any event marked as active is triggered.

OUTPUT AT STOP

Select an option from the **Add solution** list to make the solver additionally store the corresponding solutions before and after the stop condition was fulfilled. Select:

- **No** (the default) to not store any additional solutions. The last solution stored is the one normally stored by the solver before the stop condition was fulfilled.

- **Step before stop** to store the last step taken by the solver before the stop condition was fulfilled. No solutions are stored after this point even if they normally would be.
- **Step after stop** to store the solver step at which the stop condition was fulfilled. Any solutions up to this point are also stored as they normally would be.
- **Steps before and after stop** to store all solutions that would be stored by **Step before stop** and **Step after stop**.

Which solutions are normally stored by the solver depends on the **Times to store** setting for the Time-Dependent Solver node and on the **Parameters to store** setting for the Parametric node.

An example of using **Step before stop** would be to make sure to capture the last state of a simulation before a certain condition has been fulfilled, without having to store all of the solver steps up until this point. The setting **Step after stop** would similarly be used to capture the first state fulfilling a certain condition. When both the state before and after the condition are of interest, use the setting **Step before and after stop** to capture the transition. If the stop condition was fulfilled by the reinitialization effect of an implicit event, **Step before stop** stores the solution before reinitialization and **Step after stop** stores the solution after reinitialization.

Select the **Add warning** check box to specify that the solver adds a warning when the solver has stopped due to a stop condition.

Time Parametric

The **Time Parametric** node ( ) is an attribute node that handles settings for parameter stepping to add parametric sweeps. For each set of parameter values, a time-dependent problem is solved.

This attribute can be used together with a Time-Dependent Solver or another time-dependent solver. The functionality is then similar to when Parametric is added as a subnode to a Stationary Solver, but continuation is not supported. The initial data is the same for all parameters.

	TimeParametric in the *COMSOL Multiphysics Programming Reference Manual*.

GENERAL

Use the **Defined by study step** list to specify if the settings are synchronized with the corresponding study step. Select **User defined** to modify the parameter table and sweep type.

Use the **Sweep type** list to specify the type of sweep to perform. The **Specified combinations** type (the default) solves for a number of given combination of values, while the **All combinations** type solves for all combination of values. Using all combinations can lead to a very large number of solutions.

Use the table with **Parameter name**, **Parameter value list**, and (optional) **Parameter unit** to specify parameter names, values, and units for the parametric solver. Use the **Add** button ( ) to add a row to the table. Each row has one parameter name, a corresponding parameter value list, and an optional unit. The unit becomes orange if the unit that you specify does not match the unit given for the parameter where it is defined. For the **Specified combinations** sweep type, the list of values must have equal length. When you click in the **Parameter value list** column to define the parameter values, you can click the **Range** button ( ) to define a range of parameter values. The parameter unit overrides the unit of the global parameter. If no parameter unit is given, parameter values without explicit dimensions are considered dimensionless.

If more than one parameter name has been specified, the lists of parameter values are interpreted as follows: Assume that the parameter names are `p1` and `p2`, and that `p1` has the list 1 3 and `p2` has the list 2 4. For the **Specified combinations** sweep type, the solver first uses `p1` equal to `1` and `p2` equal to `2`. Thereafter, it uses `p1` equal to `3` and

p2 equal to 4. And when the sweep type is **All combinations**, the solver uses the following order for the parameter combinations: 1 2, 1 4, 3 2, and 3 4.

An alternative to specifying parameter names and values directly in the table is to specify them in a text file. You can use the **Load from File** button ( ) to browse to such a text file. The read names and values are appended to the current table. The format of the text file must be such that the parameter names appear in the first column and the values for each parameter appear row-wise with a space separating the name and values, and a space separating the values. Click the **Save to File** button ( ) to save the contents of the table to a text file (or to a Microsoft Excel Workbook spreadsheet if the license includes LiveLink™ *for* Excel®).

When loading and saving parameter table data using Excel®, the units in the **Parameter unit** column are included. The unit column is ignored when saving and loading parameter data to *.txt, *.csv, and *.dat files.

CLUSTER SETTINGS

Select the **Distribute parameters** check box to distribute the parameters on several computational nodes. If the problem is too large to run on a single node, you can enable the **Maximum number of groups** field to use the nodes' memory more efficiently. In this case the same parameter is solved for by several nodes that cooperate as if running a nondistributed sweep. The number of nodes that cooperate is equal to the maximum of the total number of nodes divided by the **Maximum number of groups** setting and 1. So if the total number of nodes is 12 and the **Maximum number of groups** is 3, 3 groups with 4 nodes each cooperate.

LEAST-SQUARES DATA

The section only appears if your license includes the Optimization Module and you are solving a time-dependent least-squares optimization problem.

Least-squares data are read from file, and the solver sequence is set up accordingly: If there is a least-squares objective containing parameter columns in a time-dependent study step, a Time Parametric solver is set up and the parameter names and values appear under **Least-squares data from file**.

If **Use least-squares parameters from files** is on (which is the default), parameter values corresponding to the same parameter names are merged between different files. If there are any user-defined parameters, user-defined parameter values are merged with merged data from files. For parameters that are defined only in files and not user defined (and vice versa), globally defined values are used.

General parameter values list here refers to the list of parameters in the **General** section above. If **Exclude values outside General parameter value lists** is on (which is the default), only least-squares parameter values from files that lie between the smallest and the largest user-defined parameter values are merged. Other values are ignored. Otherwise (that is, **Exclude values outside General parameter value lists** is off), all least-squares defined parameter values are merged. In the case of no user-defined parameters, the merging is done between files only.

If **Use least-squares parameters from files** is off, no least-squares parameters from files are used.

The default values of **Use least-squares parameters from files** and **Exclude values outside General parameter value lists** can be changed only if **Defined by study step** is set to **User defined**.

Upper Limit

The **Upper Limit** node ( ) makes it possible to impose restrictions on degrees of freedom (field variables). These restrictions are checked after each substep of a segregated approach. The restriction is performed without any

regards to the equations, so use this restriction with care. Enforcing an upper limit on a field variable can be useful to ensure that the field quantity does not exceed some limit, for example. Right-click a Segregated node to add an **Upper Limit** node.

UPPER LIMIT

By default, no variables have active upper limits. To activate upper limits for field variables, use the **Upper limits (field variable)** field to specify the variables and their scalar upper limits as space-separated pairs: *field_variable*_1 *limit_value*_1 *field_variable*_2 *limit_value*_2, and so on. For example, to impose an upper limit of 300 for the value of a field **u** in Component 1, enter `comp1.u 300`.

Vanka

The **Vanka** node ( ) handles settings for the Vanka iterative method. Formally, this method applies to saddle-point problems (that is, problems where the equilibrium solution is neither a maximum nor a minimum) as a preconditioner or smoother. The corresponding linear system matrix is indefinite and its diagonal often contains zeros. A typical example is the Navier-Stokes equations. Problems formulated with weak constraints are also of this type. In short, the method can be described as a block SOR method. Local coupling of certain degrees of freedom (typically the Lagrange multiplier degrees of freedom) determines the blocks. Ordinary SSOR iterations are performed for degrees of freedom not involved in the block method. This attribute node can be used together with the Iterative, Krylov Preconditioner, Presmoother, Postsmoother, and Coarse Solver attribute node.

For more detailed information about the Vanka method, see The Vanka Algorithm.

MAIN

Settings With and Without a Coarse Solver

- If used with a Coarse Solver, select a **Termination technique**. These are described for the SCGS attribute under Settings When Used With a Coarse Solver.
- If a Coarse Solver is not used, enter the **Number of iterations** to specify a fixed number of iterations to perform when this attribute is used as a preconditioner or smoother (default: 2).

Settings When Used With Any Attribute Node

Use the **Variables** list to specify variables to include in a Vanka block approach.

Use the **Block solver** list to specify how to solve the Vanka block linear systems:

- Select **Direct** (the default) to use a direct solver.
- Select **Direct, stored factorization** to store the factorization. Storing the factorization makes the solver faster because the factorization is then not performed every update, but the storage uses more memory. If two Vanka smoothers are used as a presmoother and postsmoother of a Multigrid solver, with similar enough settings, they share the same stored factorization, which means that they only use half the memory.
- Select **Iterative, GMRES** to use the iterative method GMRES.

If you use the Vanka algorithm as preconditioner or as smoother to a multigrid preconditioner when GMRES, Conjugate gradients, BiCGStab, or TFQMR is used as the linear system solver, use the **Direct** or **Direct, stored factorization** option in the **Block solver** list to get a stationary preconditioner.

The **Iterative, GMRES** option can be useful if you use the FGMRES method as linear system solver because it can handle preconditioners that are not stationary. The **Iterative, GMRES** option can also be useful if you use the Vanka algorithm as a smoother to a multigrid solver because GMRES can be a bit faster than the direct solver.

When **GMRES** has been selected in the **Block solver** list, the following options become available. Use the **Tolerance** field to specify the termination tolerance of GMRES (default: 0.02). Use the **Number of iterations before restart** field to specify how many iterations the solver should take between each restart (default: 100).

Use the **Relaxation factor** field to specify a scalar relaxation factor ω. The allowed values of this factor are between 0 and 2 (default: 0.8). See About the Relaxation Factor for more information.

Select the **Blocked version** check box (selected by default) to use a version of the Vanka method that is optimized for parallel computations.

Select the **Reuse data** check box (selected by default) to reuse the data in order to increase the performance of the Vanka method.

SECONDARY

Use the **Number of secondary iterations** field to specify the number of SSOR iterations to perform for degrees of freedom not involved in the Vanka blocks.

Use the **Relaxation factor** field to specify a scalar relaxation factor for the iterations specified in the **Number of secondary iterations** field (default: 1). The allowed values of this factor are between 0 and 2 (default: 1). See About the Relaxation Factor for more information.

References for the Linear System Solvers and the Preconditioners

1. http://graal.ens-lyon.fr/MUMPS/

2. www.netlib.org/linalg/spooles/

3. www.pardiso-project.org/

4. http://www.netlib.org/lapack/index.html

5. http://www.netlib.org/scalapack/index.html

6. https://computation.llnl.gov/casc/hypre/software.html

7. https://computation.llnl.gov/casc/hypre/download/hypre-2.9.0b_usr_manual.pdf

8. D. Kuzmin, R. Löhner, and S. Turek (editors), "Flux-Corrected Transport: Principles, Algorithms, and Applications", *Scientific Computation*, Springer-Verlag, Berlin, 2005.

9. Greenbaum, A., "Iterative Methods for Linear Systems", *Frontiers in Applied Mathematics*, vol. 17, SIAM, 1997.

10. Y. Saad and M.H. Schultz, "GMRES: A Generalized Minimal Residual Algorithm for Solving Nonsymmetric Linear Systems", *SIAM J. Sci. Statist. Comput.*, vol. 7, pp. 856–869, 1986.

11. Y. Saad, *Iterative Methods for Sparse Linear Systems*, Boston, 1996.

12. Y. Saad, "A Flexible Inner-Outer Preconditioned GMRES Algorithm", *SIAM J. Sci. Statist. Comput.*, vol. 14, pp. 461–469, 1993.

13. M.R. Hestenes and E. Stiefel, "Methods of Conjugate Gradients for Solving Linear Systems", *J. Res. Nat. Bur. Standards*, vol. 49, pp. 409–435, 1952.

14. C. Lanczos, "Solutions of Linear Equations by Minimized Iterations", *J. Res. Nat. Bur. Standards*, vol. 49, pp. 33–53, 1952.

15. H.A. Van Der Vorst, "A Fast and Smoothly Converging Variant of Bi-CG for the Solution of Nonsymmetric Linear Systems", *SIAM J. Sci. Statist. Comput.*, vol. 13, pp. 631–644, 1992.

16. J.R. Gilbert and S. Toledo, "An Assessment of Incomplete-LU Preconditioners for Nonsymmetric Linear Systems", *Informatica*, vol. 24, pp. 409–425, 2000.

17. Y. Saad, *ILUT: A Dual Threshold Incomplete LU Factorization*, Report umsi-92-38, Computer Science Department, University of Minnesota, available from http://www-users.cs.umn.edu/~saad.

18. W. Hackbusch, *Multi-grid Methods and Applications*, Springer-Verlag, Berlin, 1985.

19. R. Beck and R. Hiptmair, "Multilevel Solution of the Time-harmonic Maxwell's Equations Based on Edge Elements", *Int. J. Num. Meth. Engr.*, vol. 45, pp. 901–920, 1999.

20. S. Vanka, "Block-implicit Multigrid Calculation of Two-dimensional Recirculating Flows", *Computer Methods in Applied Mechanics and Engineering*, vol. 59, no. 1, pp. 29–48, 1986.

21. H.C. Elman and others, "A Multigrid Method Enhanced by Krylov Subspace Iteration for Discrete Helmholtz Equations", *SIAM J. Sci. Comp.*, vol. 23, pp. 1291–1315, 2001.

22. A. Toselli and O. Widlund, "Domain Decomposition Methods — Algorithms and Theory", *Springer Series in Computational Mathematics*, vol. 34, 2005.

23. E. Agullo, L. Giraud, A. Guermouche, A. Haidar, and J. Roman: *Parallel algebraic domain decomposition solver for the solution of augmented systems*, HAL Id: inria-00559133, https://hal.inria.fr/inria-00559133.

24. A. Haidar: *On the parallel scalability of hybrid solvers for large 3D problems*, Ph.D. dissertation, INPT, June 2008, TH/PA/08/57, http://ethesis.inp-toulouse.fr/archive/00000650/01/haidar.pdf.

25. J.E. Dennis, Jr., and Robert B. Schnabel, *Numerical Methods for Unconstrained Optimization and Nonlinear Equations*, SIAM, 1996.

26. Intel® Developer Zone, *Preconditioners based on Incomplete LU Factorization Technique*: https://software.intel.com/en-us/node/470360.

27. R. Fruend, "A Transpose-Free Quasi-Minimal Residual Algorithm for Non-Hermitian Linear Systems", *SIAM Journal on Scientific Computing*, vol. 14, pp. 470–482, 1993.

28. H.M Bücker, *A transpose-free 1-norm quasi-minimal residual algorithm for non-Hermitian linear systems*, FZJ-ZAM-IB-9706.

The COMSOL Multiphysics implementations of the algebraic multigrid solver and preconditioner are based on the following references:

29. K. Stüben, *Algebraic Multigrid (AMG): An Introduction with Applications*, GMD Report 70, GMD, 1999.

30. C. Wagner, *Introduction to Algebraic Multigrid*, course notes, University of Heidelberg, 1999.

31. R. Hiptmair, "Multigrid Method for Maxwell's Equations", *SIAM J. Numer. Anal.*, vol. 36, pp. 204–225, 1999.

32. D. J. Mavriplis, "Directional Agglomeration Multigrid Techniques for High-Reynolds Number Viscous Flows", *ICASE Report No. 98-7 (NASA/CR-1998-206911)*, Institute for Computer Applications in Science and Engineering, NASA Langley Research Center, Hampton, VA, 1998.

33. V. John and G. Matthies, "Higher-order Finite Element Discretization in a Benchmark Problem for Incompressible Flows", *Int. J. Numer. Meth. Fluids*, vol. 37, pp. 885–903, 2001.

34. V. John, "Higher-order Finite Element Methods and Multigrid Solvers in a Benchmark Problem for the 3D Navier-Stokes Equations", *Int. J. Numer. Meth. Fluids*, vol. 40, pp. 775–798, 2002.

35. J. Zhu, X. Zhong, C.-W. Shu, and J. Qiu, "Runge-Kutta discontinuous Galerkin method using a new type of WENO limiters on unstructured meshes," *Journal of Computational Physics*, vol. 248, pp. 200–220, 2013.

36. X. Zhang, Y. Xia, and C.-W. Shu, "Maximum-Principle-Satisfying and Positivity-Preserving High Order Discontinuous Galerkin Schemes for Conservation Laws on Triangular Meshes," *J. Sci. Comput.*, vol. 50, pp. 29–62, 2012.

Solution Utility Nodes

The following sections describe the solver utility nodes (listed in Table 20-8) and the settings in detail.

TABLE 20-8: SOLUTION UTILITY NODES

ICON	NAME	DESCRIPTION
	Adaptive Mesh Refinement (Utility Node)	Stores the solution on the finest mesh from a mesh refinement procedure.
	Assemble	Provides a way of accessing assembled matrices and vectors for further work in Java®.
	Combine Solutions	Combining solutions by concatenation or summation. Also available at the study level.
	Compile Equations	Compiles equations by specifying which study and study step to use and specifying representation of complex variables.
	Copy Solution	Copy the complete solution results from another solver, including all dependent variables.
	For and End For	Add a for loop to the solver sequence to iterate some solver commands.
	Input Matrix	Used to create the raw data of an assembled matrix or vector from Java®.
	Solution Store	Stores the solution at this point of the solver configuration also after the solver configuration has been computed.
	State Space	Provides a way of accessing state-space matrices for further work in Java.

About Solver Commands in the *COMSOL Multiphysics Programming Reference Manual*.

Adaptive Mesh Refinement (Utility Node)

The **Adaptive Mesh Refinement** ( ) utility node is added automatically (to an otherwise empty solver configuration) by the corresponding Adaptive Mesh Refinement attribute node. It is a container for a solution obtained using the attribute node. It is not possible to add this node manually and it does not have any settings.

Assemble

The **Assemble** node ( ) provides access to the raw data of any assembled matrix or vector. Right-click the **Solution** node and select **Other>Assemble**. Select the appropriate check boxes for the matrices and vectors you want to inspect or modify and save the model as a model file for Java®. You can also display the values of these system matrices in a table using the System Matrix node ( ) found under **Results>Derived Values**. The saved Java file now contains code for assembling the selected matrices and vectors that can be used to access the matrix rows, columns, values, and so forth. For information about the eliminated system, see Elimination Constraint Handling.

Note that some study types require that additional parameters are defined. In order to get the expected matrices, you have to specify these parameters manually. If you get an error about undefined variables, you can define the variables in the Parameters node found under **Global Definitions**. Note that the value you set is the one that is used in the expressions where the variable is found. Some examples of variables that might be needed:

- `t`, the requested output time.

- `timestep`, the time step used by the solver, for time-dependent problems.
- `freq`, the frequency to assemble the problem for, for frequency-dependent problems.

There are also other variables that might be needed: `phase` (the phase), `niterCMP` (the nonlinear iteration number), and `CFLCMP` (a pseudo-time-stepping control variable).

ELIMINATED OUTPUT

In this section you can choose to output matrices and vectors that are passed to the linear solvers — that is, where constraints have been eliminated — by enabling one or several of the following check boxes: **Eliminated load vector, Eliminated stiffness matrix**, **Eliminated damping matrix**, **Eliminated mass matrix**, **Constraint null-space basis**, **Constraint force null-space basis**, **Particular solution (ud)**, and **Scale vector**.

NONELIMINATED OUTPUT

In this section you can choose to output matrices and vectors that the solver assembles before the elimination step by enabling one or several of the following check boxes: **Load vector**, **Stiffness matrix**, **Damping matrix**, **Mass matrix**, **Constraint vector**, **Constraint Jacobian**, and **Constraint force Jacobian**.

OPTIMIZATION OUTPUT

In this section you can choose to output matrices and vectors assembled during optimization by enabling one or several of the following check boxes: **Optimization constraint Jacobian**, **Optimization constraint vector**, **Lower bound constraint vector**, and **Upper bound constraint vector**.

ADVANCED

If you want to assemble an eigenvalue problem, you can set the **Eigenvalue name** (default: `lambda`) and the **Value of eigenvalue linearization point** by first selecting the **Set eigenvalue name** check box.

CONSTANTS

In this section you can define constants that can be used as temporary constants in the solver. You can use the constants in the model or to define values for internal solver parameters. These constants overrule any previous definition (for example, from Global Definitions). Some examples of when it can be useful to define constants for a solver:

- When doing more advanced solver sequences, where constants need to be changed in between calls (for example, in for-loops).
- When you do not want to change the global definition of a parameter or when you cannot or do not want to use a Parametric Solver feature.
- When you want to define auxiliary parameters that are part of the equations like `CFLCMP` or `niterCMP` and where the solver does not define these parameters.

Click the **Add** button (+) to add a constant and then define its name in the **Constant name** column and its value (a numerical value or parameter expression) in the **Constant value** column. By default, any defined parameters are first added as the constant names, but you can change the names to define other constants. Click **Delete** ( ) to remove the selected constant from the list.

LOG

This section, which is initially empty, contains a log from the assembling Select the **Keep warnings in stored log** to keep warning messages in this log so that the information in those warnings is also available when reopening the model.

	Assemble in the *COMSOL Multiphysics Programming Reference Manual*.

Compile Equations

In the **Compile Equations** ( ) node's **Settings** window, you specify which study and study step to use when computing the current solver configuration and compiling the equations to solve. The node displays the name of the selected study step: **Compile Equations: Stationary**, for example. Right-click this node and select **Statistics** to see the number of degrees of freedom for the solver (see The Statistics Page).

STUDY AND STEP

Specify the study in the **Use study** list and the study step in the **Use study step** list. By default you get the parent study and its first study step.

Complex variables are by default represented by complex-valued degrees of freedom. By selecting the **Split complex variables in real and imaginary parts** check box, the representation of complex variables is changed to using separate real degrees of freedom for the real and imaginary parts. The split representation can improve convergence where nonanalytic functions of complex variables are used in equations. Using a split representation also makes it possible to avoid complex pollution (a small nonzero imaginary component) of real variables by specifying a *real* or *complex* value type for variables. If you use a split representation of complex variables, specify the value type of dependent variables in the **Discretization** sections in the **Settings** windows for the main physics nodes (to see this setting, click the **Show More Options** button ( ) and select **Advanced Physics Options** in the **Show More Options** dialog box).

	The split representation enables a correct evaluation of Jacobians for the following operators: `real`, `imag`, `conj`, `abs`, and `realdot`.

LOG

Select the **Keep warnings in stored log** check box if you want to keep any warnings in the log.

Copy Solution

The **Copy Solution** node ( ) is a utility node whose purpose is to copy the complete solution results from another solver, including all dependent variables. Right-click the **Solution** node and select **Other>Copy Solution** to add a **Copy Solution** node anywhere in a solver configuration; the software can then copy the solution from another solver at that point of the sequence. By default, Copy Solution nodes get a name that shows the name of the solution that they copy, such as **Solution 1** (or **No Solution**).

The **Settings** window for the Copy Solution nodes contains the following section:

GENERAL

From the **Solution** list, choose the solution to copy (any available Solution or Solution Store node in the model). The default is **None**, which copies no solution.

	Use this node only when you need a complete copy of the solution that will not be used for further computations. To copy the solution from another solver and use it for further computations, use the **Initial Values of Variables Solved For** and **Values of Variables Not Solved For** sections of the **Dependent Variables** node or the **Values of Dependent Variables** section of the study settings instead.

For and End For

From the **Programming** submenu for solver sequences, you can select **For** to add two nodes to the end of the sequence, a **For** node ( ) and an **End For** node ( ). You can then move these node where you want to create a for loop that iterates some part of the solver sequence. When the sequence is run, the for loop runs the node in between the **For** and **End For** nodes a fixed number of steps. You can add more than one **For** node to create nested for loops. The model tree displays the loop structure by indenting the description text for the nodes. The for loops must be balanced; otherwise an error occurs. For loops can be useful, for example, for solving particle-field interactions in particle tracing by iterating between a stationary and a time-dependent solver.

The **End For** node has no settings. The **Settings** window for the **For** node contains the following setting:

GENERAL

Select an option from the **Defined by study step** list. The default is **User defined**. If any instances of the Bidirectionally Coupled Particle Tracing or Bidirectionally Coupled Ray Tracing study step are present in the study then they can also be selected from the list.

Select an option from the **Termination method** list: **Fixed number of iterations** (the default) or **Convergence of global variable**. For **Fixed number of iterations** enter a positive integer for the **Number of iterations** (default 5). Any nodes between this **For** node and the following **End For** node will be repeated a number of times equal to the specified **Number of iterations**.

For **Convergence of global variable** enter the following:

- **Global variable** (default 1)
- **Relative tolerance** (default 0.001)
- **Relative tolerance threshold** (default 1)
- **Maximum number of iterations** (positive integer, default 25)
- **Minimum number of iterations** (positive integer, default 1)

At the end of each iteration, the relative error is

$$\text{err} = \frac{g_1 - g_0}{\max(g_1, g_t)}$$

where g_0 is the value of the global variable from the previous iteration, g_1 is the value of the global variable from the current iteration, and g_t is the **Relative tolerance threshold**. A new iteration of the loop is started if the iteration number is less than the **Maximum number of iterations**, and if either the relative error is less than the **Relative tolerance** or the iteration number is less than the **Minimum number of iterations**.

The Statistics Page

Use the **Statistics** page to view statistics about a solver, its dependent variables, and their number of degrees of freedom. This can be done before solving the problem and is useful for determining which variables are the most costly to compute and store. To open the **Statistics** page for a solver, right-click the Compile Equations node ( ) and select **Statistics**. This page contains the following section:

NUMBER OF DEGREES OF FREEDOM

Here you see a list of the dependent variables and their number of degrees of freedom (DOFs) as well as the total number of DOFs. The list includes both variables solved for and variables not solved for.

	Computing this statistic requires a computation of the size of the assembled finite element model. This can take some time for large models.

Input Matrix

Use the **Input Matrix** node ( ) to create the raw data of an assembled matrix or vector from Java. Right-click the Eigenvalue Solver, Stationary Solver, or Time-Dependent Solver nodes and select **Input Matrix**. Select the appropriate check boxes for the matrices and vectors you want to input and save the model as a file for Java. The saved Java file now contains code for inputting the selected matrices and vectors.

INPUT

In this section you can choose to input matrices and vectors that are passed to the linear solvers by enabling one or several of the following check boxes: **Load vector, Stiffness matrix**, **Damping matrix**, **Mass matrix**, **Constraint vector**, **Constraint Jacobian**, and **Constraint force Jacobian**.

	The matrices and vectors input using the **Input Matrix** node replace the corresponding matrices and vectors in the assembled system from the model in COMSOL Multiphysics.

	• Elimination Constraint Handling • InputMatrix in the *COMSOL Multiphysics Programming Reference Manual*

Solution Store

This is a utility node that makes it possible to access intermediate solution results. By default, the software only stores the solution at the last computed node of a solver configuration. Add a **Solution Store** node ( ) anywhere in a solver configuration to make the COMSOL software store the solution at that point of the sequence in addition to the solution at the last computed node. You can use the solution from a **Solution Store** node when analyzing the results and as initial values (via a study-type node) for other computations. By default, Solution Store nodes created under a **Parametric Solutions** node ( ) get a name that shows the values of the parameters used for the solution of a parametric sweep (for example, **Tinit=340, c0_pro=1400**).

The **Settings** window for the Solution Store nodes contains the following sections:

GENERAL

This section contains the name of the solver sequence that the **Solution Store** node is using.

LOG

This section is initially empty. It contains information if you use a **Solution Store** node to store parametric sweep data.

	StoreSolution in the *COMSOL Multiphysics Programming Reference Manual.*

State Space

The **State Space** node ( ) provides access to the raw data of a PDE in state-space form. To create state-space data, right-click the solver node and select **Other>State Space**. Specify the input and output and the state-space matrices and vectors that you want to access. Then save the model as a file for Java®. The saved Java file contains code for assembling the selected matrices and vectors that can be used to access the matrix rows, columns, values, and so on.

INPUT

In the **Input parameters** field, enter all parameters that affect the model as space- or comma-separated entries.

OUTPUT

The state-space node assembles matrices that describe a model as a dynamic system when **Off** is selected from the **Static** list:

$$Mc\dot{x} = MAx + MBu$$
$$y = Cx + Du$$

If you select **On** from the **Static** list, a static linearized model of the system is described by

$$y = (D - C(MA)^{-1}MB)u$$

In the **Output expressions** field, enter all expressions that are to be evaluated as output from the model as space- or comma-separated entries. Select any of the **MA**, **MB**, **D**, and **C** check boxes, and if **Static** is set to **Off**, any of the **MC**, **Null**, **ud**, or **x0** check boxes. **Null** is the PDE constraint null-space matrix, and **ud** is a particular solution fulfilling the constraints. **x0** is the initial data. The solution vector U for the PDE problem can then be written

$$U = \mathrm{Null}x + ud + u0$$

where $u0$ is the linearization point, which is determined by the current solution (that is, the solution computed by the previous feature in the sequence). The previous feature can, for example, be a solver or a Dependent Variable node. The Dependent Variable node gives control over which variables to solver for (compute the matrices for). The input linearization point is stored in the sequence after the state-space node is run.

CONSTANTS

In this section you can define constants that can be used as temporary constants in the solver. You can use the constants in the model or to define values for internal solver parameters. These constants overrule any previous definition (for example, from Global Definitions). Some examples of when it can be useful to define constants for a solver:

- When doing more advanced solver sequences, where constants need to be changed in between calls (for example, in for-loops).
- When you do not want to change the global definition of a parameter or when you cannot or do not want to use a Parametric Solver feature.
- When you want to define auxiliary parameters that are part of the equations like `CFLCMP` or `niterCMP` and where the solver does not define these parameters.

Click the **Add** button (+) to add a constant and then define its name in the **Constant name** column and its value (a numerical value or parameter expression) in the **Constant value** column. By default, any defined parameters are first added as the constant names, but you can change the names to define other constants. Click **Delete** ( ) to remove the selected constant from the list.

LOG

This section, which is initially empty, contains a log from the run of the **State Space** node. This log is stored in the Model MPH-file. Select the **Keep warnings in stored log** to keep warning messages in this log so that the information in those warnings is also available when reopening the model.

	StateSpace in the *COMSOL Multiphysics Programming Reference Manual.*

Job Configurations

The **Job Configurations** node ( ) automatically appears if the Job node has content. Or to make it available in the context menu, click the **Show More Options** button ( ) and select **Solver and Job Configurations** in the **Show More Options** dialog box.

The following categories of job configurations each correspond to a node:

- Parametric Sweep, Function Sweep, and Material Sweep
- Batch
- Cluster Computing
- Optimization
- Sequence

Most of these job configuration nodes share the common set of subnodes listed in Table 20-9. In addition, a Batch job configuration node has a default Batch Data subnode that in turn stores External Process nodes, which contain information about batch jobs. Cluster Computing job configuration nodes do not have any subnodes and must point to a Batch job configuration. Optimization job configuration nodes do not have any subnodes but include parametric jobs.

- Using a Job Configuration to Store Parametric Results on File
- Advanced Study Extension Steps

TABLE 20-9: PARAMETRIC AND BATCH SUBNODES

ICON	NAME	DESCRIPTION
	Derived Value	Runs a Derived Values node.
	Evaluate Derived Value	Evaluate some or all Derived Values nodes.
	Export to File	Runs an Export node and saves it to a file.
	External Class	Runs the main method of an external compiled Java® class.
	External Process	A Batch subnode that contains information about the batch processes that have been started by the Batch (Job Configurations) node. Each External Process node is associated with a started batch job.
	Geometry	Runs a geometry sequence.
	Job	Runs a Parametric, Batch, or Cluster Computing job node.
	Mesh	Runs a meshing sequence.
	Plot Group	Runs a Plot Group node.
	Save Model to File	Stores a model in the state that it is at that point in the job configuration.
	Solution	Runs a solver configuration.

TABLE 20-10: JOB CONFIGURATIONS NODE - CONTEXT MENU OPTIONS

ICON	NAME	DESCRIPTION
	Show Default Solver	Shows the default job configuration node (if any) that corresponds to the study step nodes in the study.
	Parametric Sweep (Job Configurations)	Adds a Parametric Sweep node, which can loop over a given set of parameters. For each set of parameters, it runs the sequence defined by its subnodes. You can combine the sequence with other Batch, Parametric, or Cluster Computing sequences in a hierarchical way by adding a job configuration that points to another node.
f(x)	Function Sweep (Job Configurations)	This is a special version of a parametric sweep that sweeps over functions defined under a Switch node that you add from Definitions>Functions.
	Material Sweep (Job Configurations)	This is a special version of a parametric sweep that sweeps over materials defined under a Switch node that you add under Materials.
	Batch (Job Configurations)	Adds a Batch node to run batch jobs. The Batch job has a special Batch Data subnode that collects External Process subnodes containing job status information.
	Cluster Computing (Job Configurations)	Adds a Cluster Computing node, which is useful when you want to submit a batch job to a job scheduler to run the model in distributed mode as a batch job.
	Optimization (Job Configurations)	This node can be added together with an Optimization study that is using a gradient-free optimization solver. It shows which parametric sweeps run during the optimization.
	Sequence	Runs job sequence steps just like the Parametric feature, but it only runs them once without any parameters or sweep. It is similar to the Batch feature, but does not create a batch job, it just runs the steps. You can use it to store models and results to file, for example.
	Delete Configurations	Deletes all jobs under the Job Configurations node.

* Optimization is an option with the addition of the Optimization Module.

Parametric Sweep (Job Configurations)

One of the main nodes is the **Parametric Sweep** ( ) job configuration, which can loop over a given set of parameters. For each set of parameters, it runs the sequence defined by its subnodes. You can combine the sequence with other Batch, Parametric, or Cluster Computing sequences in a hierarchical way by adding a job configuration that points to another node. You can, for instance, create a **Parametric Sweep** node that does a LiveLink™ update and then runs a **Cluster Computing** node that in turn runs a second **Parametric Sweep** sequence on another node.

A parametric sweep can contains steps to run all solutions, save the model to a file, and evaluate derived values, for example. You add those steps by right-clicking the **Parametric Sweep** node and selecting one of the following options:

- **Job**
- **Solution**
- **Other**
- **Save Model to File**, which saves the solved model to an MPH-file. See Save Model to File.
- **Results**

Job refers to another job that is to be run from this parametric sweep, while **Solution** (see Solution) runs a **Solution** node as available under the **Solver Configurations** node, available further up in the **Study** tree.

Under **Other**, you can choose **External Class** (see External Class), which calls an external Java® class file. Another option, **Method Call** (see Method Call), runs a model method. The **Geometry** (see Geometry), builds the **Geometry** node (runs the geometry sequence). This can be used, for example, in combination with a parametric sweep to generate a sequence of MPH-files with different geometry parameters. The **Mesh** option (see Mesh) builds the **Mesh** node (runs the meshing sequence).

Under **Results**, you can choose **Plot Group** (see Plot Group) to run all or a selected set of plot groups. This is useful for automating the generation of plot groups after solving. The **Derived Value** option is there for legacy reason, and it is instead recommended that you use the **Evaluate Derived Values** option (see Evaluate Derived Value), which evaluates nodes under **Results>Derived Values**. The option **Export to File** (see Export to File) runs any node for data export under the **Export** node.

GENERAL

Use the **Defined by study step** list to specify that the settings are synchronized with the corresponding study step.

You define the parameters in the **Parameter name** and **Parameter values** fields. The parameters can be loaded from file by clicking the **Read File** button when you have selected the file through the **Load Parameter Values** dialog box, which you open by clicking **Browse**. You can add a **Stop condition** that is evaluated after each solution. The last solution, which breaks the stop condition, is discarded from the set of solutions returned (the **Parametric Solutions** node) but is included in probe table outputs. Once the condition evaluates to a negative value, the **Parametric** node is stopped. Select the **Keep solutions before and after stop condition** check box to store both solutions — before and after the stop condition has been satisfied — in the parametric solutions storage.

RESULTS WHILE SOLVING

Select the **Plot** check box to allow plotting of results while solving. Select what to plot and when from the **Plot group** list. The dataset of the selected plot group is plotted as soon as the results become available.

Use the **Probes** list to select any probes to evaluate. Use the **Accumulated probe table** to accumulate data during a sweep. The accumulation is over solver variations (time, frequency, and so forth) and variations over the parametric sweep. For independent variation of parameters, you can use the accumulated table with the **Format: Filled** to change the table data into a matrix format that can be used for response surface plots.

ERROR

Errors are usually stored in the **Error** table. If you want to get the error message at once, select the **Stop if error** check box.

CLUSTER SETTINGS

You can distribute the sweep on several computational nodes by selecting the **Distribute parameters** check box. If the problem is too large to run on a single node, enable the **Maximum number of groups** field to use the nodes' memory more efficiently. In this case, the same parameter is solved for by several nodes that cooperate as if running a nondistributed sweep. The number of nodes that cooperate is equal to the maximum of the total number of nodes divided by the **Maximum number of groups** setting and 1. So if the total number of nodes is 12 and the **Maximum number of groups** is 3, 3 groups with 4 nodes each cooperate.

LOG

Select the **Keep warnings in stored log** check box as needed.

	An Integro-Partial Differential Equation: Application Library path **COMSOL_Multiphysics/Equation_Based/integro_partial**.

Using a Job Configuration to Store Parametric Results on File

Batch (Job Configurations)

The **Batch** ( ) job configuration is the main node for running batch jobs. Batch jobs run in separate processes. You can therefore continue working in the COMSOL Desktop once a batch job is run. Model changes in the COMSOL Desktop after the batch job is submitted do not affect the model in the batch job. The **Batch** job has a special Batch Data subnode, which collects External Process subnodes containing job status information.

As in the Parametric Sweep (Job Configurations) node, the batch job is defined by a number of subnodes (see below). The batch job then runs each subnode. Use the **Save as Default** button in the toolbar to save the current directory setting as the default directory for batch files.

A batch job can contains steps to run all solutions, save the model to a file, and evaluate derived values, for example. You add those steps by right-clicking the **Parametric Sweep** node and selecting one of the following options:

- **Job**
- **Solution**
- **Other**
- **Save Model to File**, which saves the solved model to an MPH-file. See Save Model to File.
- **Results**

Job refers to another job that is to be run from this batch job, while **Solution** (see Solution) runs a **Solution** node as available under the **Solver Configurations** node, available further up in the **Study** tree.

Under **Other**, you can choose **External Class** (see External Class), which calls an external Java® class file. Another option, **Method Call** (see Method Call), runs a model method. The **Geometry** (see Geometry), builds the **Geometry** node (runs the geometry sequence). This can be used, for example, in combination with a parametric sweep to generate a sequence of MPH-files with different geometry parameters. The **Mesh** option (see Mesh) builds the **Mesh** node (runs the meshing sequence).

Under **Results**, you can choose **Plot Group** (see Plot Group) to run all or a selected set of plot groups. This is useful for automating the generation of plot groups after solving. The **Derived Value** option is there for legacy reason, and it is instead recommended that you use the **Evaluate Derived Values** option (see Evaluate Derived Value), which evaluates nodes under **Results>Derived Values**. The option **Export to File** (see Export to File) runs any node for data export under the **Export** node.

GENERAL

Use the **Defined by study step** list to specify if the settings are synchronized with the corresponding study step.

Set the number of cores that the batch job should use in the **Number of cores** field if desired, by first selecting the corresponding check box. The default behavior is to use all available cores. If you set **Number of simultaneous** jobs to more than one, several jobs can run at once. When you are running more than one job at once, it is important that the product of **Number of cores** and **Number of simultaneous** jobs does not exceed the number of cores available on the computer. Otherwise you experience performance degradation. When you run multiple batch jobs on your computer, COMSOL Multiphysics makes sure this does not happen if you are using the automatic setting. If you have a multicore machine, you can change these settings to control the number of simultaneous processes that are allowed to run in the batch sweep and also how many cores each of them is allowed to use. If you have a six-core machine, for example, change the **Number of simultaneous jobs** to three and the **Number of cores** to two. This allows three parameters to be solved in parallel, where each solver process gets access to two cores. For simulations where each parameter represents a small computational problem, you can increase the number of simultaneous jobs to as

many cores as you have on your computer. For larger problems, keep this setting to one simultaneous job (the default setting) to fully utilize the multicore processing power of the solvers.

	You can also control the number of simultaneous jobs from the **Batch Sweep** node' **Settings** window, in the **Study Extensions** section. In that case, the number of cores is automatically computed from the number of physical cores divided by the number of simultaneous jobs (for this to be automatic, you must not select the **Number of cores** check box).

Select the **Use graphics** check box when the batch process should run results nodes that create graphical contents such as exporting to file.

Enter the **Number of job restarts**. The default is 0. This is the maximum number of times the job can be restarted if it fails to complete.

Enter a value for the **Alive time (seconds)**. The default is 300 seconds. This is the longest time the process is allowed to run before it must inform that it is still running. Failure to do so means that the process is considered dead and a new process is started if the maximum number of job restarts is not reached.

You can set a **Start time** if you want the batch process to start at a later time. Select the hour (0–23 hours) to start the run from the **Start time** list, or select **Now** to start the batch process without a delay.

FILES

Set the **Filename** of the model. If the batch job is generated from a parametric sweep, a unique name that depends on the parameter names and values is created. The default is to overwrite any previous models with the same name. Disable the default by clearing the **Clear previous model** check box. Select the **Clear meshes** check box to clear the meshes before running the batch sweep. The default is to not clear the meshes. Select the **Clear solutions** check box to clear the solutions before running the batch sweep.

Specify the **Directory** to store the model. The directory refers to the location where the client (COMSOL Desktop) reads and writes data. Click **Browse** if you want to browse to a directory.

From the **Add parameters to filename** list, choose **Parameter name and value** (the default), or choose **Index**, which instead of parameter names and parameter values uses an index scheme `iX`, `iY`, …, where same indices relate to the same parameter value. This option gives much shorter filenames.

- If you are connected to a COMSOL Multiphysics server on another computer, you can control the working directory used by the COMSOL Multiphysics server if you select the **Specify server directory path** check box and enter the path to the server **Directory** or **Browse** for the path. Otherwise a temporary directory on the COMSOL Multiphysics server is used to save files. The server directory path refers to the location where the COMSOL Multiphysics server reads and writes the corresponding data (assuming a client-server configuration).
- If the batch job has another path to the directory, you select the **Specify external COMSOL batch directory path** check box and enter the path to the batch **Directory** or **Browse** for the path. If the batch job has another path to the directory, you select the **Specify external COMSOL batch directory path** check box and enter the path to the batch **Directory** or **Browse** for the path. The external COMSOL batch directory path refers to the location where the batch process reads and writes the data.
- If COMSOL Multiphysics is installed in a different directory from where the batch job runs, enable the **Specify external COMSOL installation directory path** and specify the install directory (click **Browse** or enter the path to the **Directory**). This can occur if you are submitting jobs to a job scheduler with the **Cluster Computing** node.

Click the **Save As Default** button ( ) at the top of the **Settings** window to save the current directory setting as the default directory for batch files.

How to Specify Directory Paths for Batch Jobs and Cluster Jobs

Some examples of how to specify the paths for the directories where the batch job reads and writes data:

- If both the COMSOL Desktop and the cluster job use and have access to the same path, only set **Directory**.
- If the COMSOL Desktop submits a cluster job to a Windows HPC job scheduler, where the directory where the COMSOL Desktop stores its data is a local path to the COMSOL Desktop but a network path to the cluster job, specify the main **Directory** and a separate external COMSOL batch directory path, respectively.
- If you use a Windows client connected to a server running on a Linux server head node that in turn is submitting a job to a job scheduler, that setup then requires the main **Directory** (which is a local Windows path) and a server directory path (which is a Linux path on the head node). Most likely, an external COMSOL batch directory path is not needed in this case because it is likely that the cluster and the head node are using the same file system.
- With a COMSOL Desktop running on a remote machine, the main **Directory** path refers to the COMSOL Desktop path, and the external COMSOL batch directory path refers to a remote batch job or cluster job path.
- With a client-server configuration running on a remote machine, the main **Directory** path refers to the COMSOL Desktop path, the server directory path refers to the server path, and the external COMSOL batch directory path refers to the remote batch job or cluster job path.

To summarize: If the batch job and the COMSOL Desktop do not share the same view of the file system, you must specify at least the main **Directory** and the external COMSOL batch directory.

SYNCHRONIZATION

Select the **Synchronize solutions** check box to synchronize the solutions computed by the batch processes with the model. This allows additional postprocessing after the sweep has finished. The default is to disable solution synchronization. Select the **Synchronize accumulated probe table** check box to synchronize the accumulated probes computed by the batch processes with the model. The accumulated probe synchronization is enabled by default. Select the **Output model to file** check box to enable that all batch processes save the models to file. In most cases, use the solution synchronization and probe synchronization functionality instead because otherwise the data ends up in one file for each process and cannot be postprocessed efficiently. Use the **Probes** list to select probes to update during the batch sweep. The default is **All**, which selects all probes for plotting and tabulation of probe data. Select **Manual** to open a list with all available probes. Use the **Move Up** ( ), **Move Down** ( ), **Delete** ( ), and **Add** ( ) buttons to make the list contain the probes that you want to see results from while solving. Select **None** to disable probe updating for batch sweep.

When the **Synchronize solutions** check box is selected for some models, the batch sweep stores a large amount of files in the directory specified under **Cluster computer settings**. Those files are needed for the synchronization of the solutions.

Select the **Accumulated probe table** check box to activate the accumulation of probe updates for both the variation on the solver level (time, frequency, and so forth) and on the batch sweep level. Use the **Output table** to select where to put the data. Select the **Use all probes** check box if all the model probes should be accumulated in the table. If the check box is not selected, the probes selected from the **Probes** list are used.

CLIENT SETTINGS

The **Batch** node can also be used as a client to drive a server on another machine. You enable the client functionality by selecting the **Client** check box. You can then set the **Hostname** (default: localhost) and **Port number** of the server

for the batch job (default: 2036) to connect to. This number is the default port number. If the server you want to connect to is using another port, then edit this number accordingly.

	Micromixer — Batch Version: Application Library path **COMSOL_Multiphysics/Tutorials/micromixer_batch**.

	The COMSOL Commands

Cluster Computing (Job Configurations)

The **Cluster Computing** ( ) job configuration is useful when you want to submit a batch job to a job scheduler or you want to run the model in distributed mode as a batch job. This node is created the first time you submit a job. If you want to change its settings before the first job submission, right-click the **Study** node and select **Show Default Solver**.

When you have specified the cluster computing settings, click the **Save as Default** button ( ) in the **Settings** window's toolbar to save the current setting as default.

	These settings are saved to The Preferences Dialog Box in the **Multicore and Cluster Computing** section.

GENERAL

Use the **Defined by study step** list to specify if the settings are synchronized with the corresponding **Cluster Computing** study step (see Cluster Computing), or select **User defined** to define cluster settings in the **Cluster Settings** section below.

From the **Batch job** list, select which batch job to submit. Click the **Go to Source** button) to move to the **Settings** window for the selected **Batch** node.

CLUSTER SETTINGS

	After making these settings, click the **Save as Default** ( ) button on the **Settings** window toolbar to save the current directory settings as the default preference.

Enter the **Number of nodes** (compute nodes; see Overview of Simulations on Shared- and Distributed-Memory Computers) to use (the default is 1 node). Available with **Preferences controlled** settings and for the **General**, **HPCS 2008/2012/2016**, and **SLURM** scheduler types.

Enter the **Number of processes on host**. The default is 1. Available with **Preferences controlled** settings and for the **General** and **SLURM** scheduler types.

Cluster Computing Settings

From the **Settings** list, choose **Preference controlled** (the default) to use settings from the **Cluster computing** part of the **Multicore and Cluster Computing** page in the **Preferences** dialog box. Choose **User controlled** to enter the following cluster computing settings:

If you want to use a job scheduler or do some other operations before or after the job, you set the command line in the **Prepend command** and **Postpend command** fields. You can define a default command line with the system

properties `cs.precmd` and `cs.postcmd`. If the command line contains `{nn}` or `{perhost}`, they are replaced by the values in the **Number of nodes** field and **Number of processes on host** field, respectively.

Choose the **Scheduler type**: **General** (the default), **HPCS 2008/2012/2016**, **OGS/GE**, **SLURM**, **PBS**, or **Not distributed**:

General

Select **General** (the default) to configure to run on many types of clusters and schedulers, including Linux clusters.

- The entry in the **Host file** field specifies the host file used for the job. If left empty, MPD looks for a file `mpd.hosts` in the Linux home directory.
- Select which bootstrap server should be used by MPI using the **Bootstrap server** setting.
- Specify the installation directory for the MPI in the **MPI directory** field. Click **Browse** to browse for a directory on the file system.
- If you must provide extra arguments to MPI, use the **Additional MPI arguments** field.

HPCS 2008/2012/2016

Select **HPCS 2008/2012/2016** to use the Windows HPC Server 2008, HPC Pack 2012, or HPC Pack 2016 job scheduler to submit the batch job.

- Select a **Node granularity**: **Node** (the default), **Socket**, or **Core**. **Node** allocates one process on each host, **Socket** allocates one process on each socket, and **Core** allocates one process on each core.
- The **Exclusive nodes** check box is selected by default. Keep it selected if a compute node is used exclusively for a job — that is, no other jobs can interfere. Click to clear it if you want to run on nodes shared by other users.
- Set the names of **Requested nodes** to use specified nodes only. The job scheduler only allocates jobs on the nodes listed by you.
- Enter the **Node group**. As above, but can use node group names if defined by the system administrator. The job scheduler only allocates jobs on the nodes belonging to the group.
- Enter the minimum required **Cores per node** — the number of concurrent threads per physical node. The default is 0, which means all cores. The job scheduler only allocates jobs to nodes with at least as many cores as set.
- Enter the minimum required **Memory per node (MB)**. The default is 0, which means no limit. The job scheduler only allocates jobs to nodes with at least as much memory as set.
- Enter the **Runtime (minutes)** before the job is canceled. The default is **Infinite**; that is, the job is never canceled.
- Select a **Priority** — **Highest**, **Above normal**, **Normal** (the default), **Below normal**, or **Lowest** — for the scheduled job based on the standard scheduler.

Under **Cluster computing settings**:

- If you want to include scheduler arguments, add them to the **Additional scheduler arguments** field (for example, for `mpiexec`).
- Specify the installation directory for the MPI in the **MPI directory** field. Click **Browse** to browse for a directory on the file system.
- If you must provide extra arguments to MPI, use the **Additional MPI arguments** field.

Under **Advanced**:

- The entry in the **Scheduler** field is the IP address of the enterprise adapter of the head node or the DNS name of the head node. The default is `localhost`, and it should only be changed if you submit your job from a different computer than the head node.
- The entry in the **User** field is the user account that COMSOL Multiphysics uses for submitting the job. You provide the password in a separate command window that opens at execution time with the possibility to save the credentials.

OGS/GE

Select **OGS/GE** to use the Open Grid Scheduler/Grid Engine job scheduler to submit the batch job.

When **OGS/GE** is selected:

- Select a **Slot granularity** — **Host**, **Slot**, or **Manual** — to specify if COMSOL Multiphysics should parallelize on the physical **Host** level or on the OGS/GE-allocated **Slot** level. For **Host** and **Slot**, specify the **Number of slots** to allocate**.** The **Manual** setting can be used to control the granularity more. In this case set the number of computational nodes to use in the **Number of nodes**. For **Slot** and **Manual**, the number of processes on each node is set in the **Number of processes on host** field; usually this is 1.
- Enter the **Number of processes on host** to set the number of processes on each host.
- The Sun Grid Engine priority is set in the **Priority value** field. The default is 0.

Under **Cluster computing settings**:

- If you want to include scheduler arguments, add them to the **Additional scheduler arguments** field (for example, for `mpiexec`).
- Select the **Bootstrap server** that should be used by MPI.
- Specify the installation directory for the MPI in the **MPI directory** field. Click **Browse** to browse for a directory on the file system.
- If you must provide extra arguments to MPI, use the **Additional MPI arguments** field.
- Enter the **Queue name** to set the name of the Sun Grid Engine.

SLURM

Select **SLURM** to use the SLURM job scheduler to submit the batch job.

When **SLURM** is selected:

- The **Exclusive nodes** check box is selected by default. Keep it selected if a compute node is used exclusively for a job — that is, no other jobs can interfere. Click to clear it if you want to run on nodes shared by other users.
- Set the names of **Requested nodes** to use specified nodes only. The job scheduler only allocates jobs on the nodes listed by you.
- Enter the minimum required **Memory per node (MB)**. The default is 0. The job scheduler only allocates jobs to nodes with at least as much memory as set.
- Enter the **Runtime (minutes)** before the job is canceled. The default is **Infinite**; that is, the job is never canceled.
- The SLURM priority value is set in the **Priority value** field. The default is 0.

Under **Cluster computer settings**:

- If you want to include scheduler arguments, add them to the **Additional scheduler arguments** field (for example, for `mpiexec`).
- Specify the installation directory for the MPI in the **MPI directory** field. Click **Browse** to browse for a directory on the file system.
- If you must provide extra arguments to MPI, use the **Additional MPI arguments** field.
- Enter the **Queue name** to set the name of the SLURM job scheduler.

Under **Advanced**:

- The entry in the **Scheduler** field is the IP address of the enterprise adapter of the head node or the DNS name of the head node. The default is `localhost`.
- The entry in the **User** field is the user account that the COMSOL software uses for submitting the job. You provide the password in a separate command window that opens at execution time with the possibility to save the credentials.

PBS

Select **PBS** to use a PBS-based (Portable Batch System) job scheduler to submit the batch job.

When **PBS** is selected:

- Enter the minimum required **Memory per node (MB)**. The default is 0. The job scheduler only allocates jobs to nodes with at least as much memory as set.
- Enter the **Runtime (minutes)** before the job is canceled. The default is **Infinite**; that is, the job is never canceled.
- The PBS priority value is set in the **Priority value** field. The default is 0.

Under **Cluster computer settings**:

- If you want to include scheduler arguments, add them to the **Additional scheduler arguments** field (for example, for `mpiexec`).
- Specify the installation directory for the MPI in the **MPI directory** field. Click **Browse** to browse for a directory on the file system.
- If you must provide extra arguments to MPI, use the **Additional MPI arguments** field.
- The entry in the **User** field is the user account that the COMSOL software uses for submitting the job. You provide the password in a separate command window that opens at execution time with the possibility to save the credentials.

To designate nodes as exclusive, use the **Additional scheduler arguments** `-n`. This means that a compute node is used exclusively for a job — that is, no other jobs can interfere.

Not Distributed

Select **Not distributed** when you want to submit a batch job to a job scheduler without running a distributed job.

REMOTE AND CLOUD ACCESS

See Remote and Cloud Access described for Cluster Computing.

	Micromixer — Cluster Version: Application Library path **COMSOL_Multiphysics/Tutorials/micromixer_cluster**.

Function Sweep (Job Configurations)

To display this option for Job Configurations, click the **Show More Options** button ( ) and select **Solver and Job Configurations** in the **Show More Options** dialog box.

The **Function Sweep** (f(x)) is a special version of a parametric sweep that sweeps over functions defined under a **Switch** node that you add from **Definitions>Functions**.

GENERAL

Use the **Defined by study step** list to specify if the settings are synchronized with the corresponding study step. Click the **Go to Source** button) to move to the **Settings** window for the selected study node.

Add information to the table for each column: **Switch** and **Case numbers**. Use the **Move Up** ( ), **Move Down** ( ), **Add** ( ), and **Delete** ( ) buttons under the table to organize the data.

Enter a **Stop condition**.

For the rest of the settings, see Parametric Sweep (Job Configurations).

Material Sweep (Job Configurations)

To display this option for Job Configurations, click the **Show More Options** button ( ) and select **Solver and Job Configurations** in the **Show More Options** dialog box.

The **Material Sweep** ( ) is a special version of a parametric sweep that sweeps over materials defined under a **Switch** node that you add under **Materials**.

GENERAL

Use the **Defined by study step** list to specify if the settings are synchronized with the corresponding study step. Click the **Go to Source** button) to move to the **Settings** window for the selected study node.

Add information to the table for each column: **Switch** and **Case numbers**. Use the **Move Up** ( ), **Move Down** ( ), **Add** ( ), and **Delete** ( ) buttons under the table to organize the data.

Enter a **Stop condition**.

For the rest of the settings, see Parametric Sweep (Job Configurations).

Optimization (Job Configurations)

To display this option for Job Configurations, click the **Show More Options** button ( ) and select **Solver and Job Configurations** in the **Show More Options** dialog box.

The **Optimization** ( ) node needs an Optimization study to work. It work analogously to a Parametric Sweep node for parametric sweeps and is only available when you use a gradient-free optimization solver.

GENERAL

The **Parametric jobs** list shows which Parametric Sweep nodes that the optimization solver runs. Each time the optimization solver needs to evaluate the objective function, it sends a number of control parameter tuples to the parametric sweep node. The value in the **Maximum number of simultaneous objective evaluations** field in the Optimization study node controls the maximum number of tuples that can be sent to a Parametric Sweep.

You can use the **Move Up** ( ), **Move Down** ( ), **Delete** ( ), and **Add** ( ) buttons to modify the list of parametric sweeps.

LOG

The **Log** section contains solver log output from the latest optimization run. Select the **Keep warnings in stored log** check box if you want the warnings to remain in the log for troubleshooting or other use.

Sequence

To display this option, click the **Show More Options** button ( ) and select **Solver and Job Configurations** in the **Show More Options** dialog box.

The **Sequence** node ( ) is generated automatically by a Study Reference when it is used without any Parametric Sweep study step. It then runs the referenced studies in sequence.

Use a **Sequence** node to run job sequence steps in the same way as with the Parametric Sweep feature. The feature only runs the steps once without any parameters or sweep. It is also similar to the **Batch** feature, but does not create a batch job. A sequence can contains steps to run all solutions, save the model to a file, and evaluate derived values, for example. You add those steps by right-clicking the **Sequence** node and selecting one of the following options:

- **Job**
- **Solution**
- **Other**
- **Save Model to File**, which saves the solved model to an MPH-file. See Save Model to File.
- **Results**

Job refers to another job that is to be run from this sequence, while **Solution** (see Solution) runs a **Solution** node as available under the **Solver Configurations** node, available further up in the **Study** tree.

Under **Other**, you can choose **External Class** (see External Class), which calls an external Java® class file. Another option, **Method Call** (see Method Call), runs a model method. The **Geometry** (see Geometry), builds the **Geometry** node (runs the geometry sequence). This can be used, for example, in combination with a parametric sweep to generate a sequence of MPH-files with different geometry parameters. The **Mesh** option (see Mesh) builds the **Mesh** node (runs the meshing sequence).

Under **Results**, you can choose **Plot Group** (see Plot Group) to run all or a selected set of plot groups. This is useful for automating the generation of plot groups after solving. The **Derived Value** option is there for legacy reason, and it is instead recommended that you use the **Evaluate Derived Values** option (see Evaluate Derived Value), which evaluates nodes under **Results>Derived Values**. The option **Export to File** (see Export to File) runs any node for data export under the **Export** node.

Using a Job Configuration to Store Parametric Results on File

As an example of the use of a job configuration, right-click the **Job Configurations** ( ) node and add a Parametric Sweep (Job Configurations) to run a parametric study, storing the model and associated data and plots for each parameter step to individual files. This is useful if you, for example, want to:

- Avoid large model files while running large parametric sweeps.
- Store information in individual output files instead of in one large file.
- Control several file outputs directly from the COMSOL Desktop: Model MPH-files, data files (text files), and image files.

The following steps describe the most important parts of setting up a job configuration to accomplish the desired file output:

1. Start with a model that does not contain any parametric sweep and define your outputs. Then add them to the **Export** node (by right-clicking and adding **Data**, **Plot**, and image nodes as desired) and assign each data or plot output to a file.
2. Create a parametric sweep study by right-clicking the study node and adding a **Parametric Sweep**. Add the parameters you want to sweep over in Parameters under Global Definitions. Now add the parameters in

Parameter name in the parametric sweep node you created and set the **Parameter values** you want to sweep over. In some cases COMSOL Multiphysics chooses to use the more efficient parametric solver when sweeping. Set the **Use parametric solver** under **Study Extensions** to **Off** if you want to avoid this. Use the **Keep solutions in memory** setting **Only last** to conserve memory. In that case use the Accumulated Probe table to store the data you want to use for later processing. You can also choose to store the models on file by enabling the **Save each solution as model file** and then entering a filename in the **Filename** field, or clicking **Browse** to choose a name and location for the model files. The models created during the simulation can then be found in a **Save model to File** node under **Job Configurations**. The default settings are configurable in the Preferences dialog box.

3 If you want to create output files with the parametric sweep for further analysis, right-click the main study node and select **Show Default Solver**. Select the parametric node under **Job Configurations** that corresponds to the parametric sweep from which you want to export data. You can see which parametric sweep the node corresponds to from the **Defined by study step** list. Note that if you run a stationary study, you need to switch off **Use parametric solver** in the **Study Extensions** section (see above) to get the node under **Job Configurations**.

- Right-click the **Parametric** node and select **Results>Plot Group** if you want to run a **Plot Group** for each parameter value in the sweep. In most cases use the **Plot** settings under **Results While Solving** (in the study step's **Settings** window) instead.
- Right-click the **Parametric** node and select **Results>Derived Value** to run a **Derived Values** node for each parameter value in the sweep. This functionality is similar to probes but is useful if you have already set up a **Derived Values** node that you want to use during the sweep. The values are stored in a table (similar to probes) for further processing.
- Right-click the **Parametric** node and select **Results>Export to File** if you want to export data to a file for each parameter value in the sweep, running an **Export** node under **Results**. Note that after the sweep, the files created are listed in the node and can be opened in a browser using the **Open** button.

Advanced Job Configurations

Because a job configuration defines a sequence of steps, you can create highly advanced models that use different solvers and sweeps as input to each other and perform different types of postprocessing during a sweep. Here are some suggestions:

- Create a parametric job configuration that uses two solvers. The first solver is used as input to the second solver. One way to create such a sweep is to create two studies. Let the second study use the first as input from the **Values of Dependent Variables**. Create a **Parametric Sweep** in the first study and select to keep **Only last** solution. Run **Show Default Solver** in both studies and enter the **Job Configurations** node of the first study. Right-click the **Parametric** node and add a **Solver**. Select the new solver and set it to run the second solver from the second study. Also check the **Keep all solutions** settings. Right-click the **Parametric** node and select **Run**. You can add further functionality to the sequence such as **Export to File** to suit your needs.
- Another possibility is to create a parametric sweep that runs a **Cluster Computing** node. This gives you similar functionality as the distributed parametric sweep, but the results are stored in separate files. Note that this requires several licenses, one for each process running simultaneously. One way to create this is to add a **Cluster Sweep** node by right-clicking the study. This node creates such a sweep automatically. It also sets up synchronization of solutions and accumulated probe tables when the synchronization is enabled. Another, more complicated, way is to add a **Cluster Computing** node by right-clicking the study. Note that you need the **Advanced Study Options** enabled. If you added the **Cluster Computing** node, then run **Show Default Solver** and select the **Job Configurations** node. Right-click and add a **Parametric** node. Right-click the new **Parametric** node and enable it. Right-click again and add a **Job** node. Set the job sequence to point to the **Cluster Computing** node. This sets up the new **Parametric** node to start a new process for each parameter. After you have set the parameters that you want to compute for, right-click and select **Run**. The resulting models are stored in **External Process** nodes under the batch job run by the cluster computing node. To get exported data during the runs, you can use the

functionality **Export to File** described above or enable the synchronization of solutions and accumulated probe tables in the **Batch** node.

- Create a parametric sweep that runs a solver and a class file that uses the COMSOL API to modify the solution. This can be useful if you want COMSOL Multiphysics to communicate with another program. You do this by adding a **Parametric Sweep** node to the study that you want to use. Run **Show Default Solver** and enter the **Job Configuration**s node. Right-click the **Parametric** node and select **Other>External Class**. You can also modify the **Parametric** node by, for example, adding a **Stop condition**.

The default names for the nodes that you add under the **Parametric** node use a dynamic naming, so that the sequence that is run and, when applicable, the data storage node appear in the node name. By renaming the node to a user-defined name, you disable the dynamic naming.

Batch Data

The **Batch Data** node ( ) contains information about the batch processes that have been started by the Batch (Job Configurations) node ( ). Each process is represented by an External Process ( ) subnode. On the **Batch Data** node's **Settings** window, click the:

- **Attach Job** button ( ) on the **Settings** window toolbar to display the progress of all the external processes. The GUI enters a progress mode in order to follow the progress of the external processes.
- **Stop all Processes** button ( ) to send the stop command to unfinished jobs.
- **Cancel all Processes** button ( ) to send the cancel command to unfinished jobs.

	Micromixer — Batch Version: Application Library path **COMSOL_Multiphysics/Tutorials/micromixer_batch**.

Derived Value

The **Derived Value** node ( ) runs a Derived Values node defined in the **Results** branch of the model tree.

	Use the Evaluate Derived Value instead. The **Evaluate Derived Value** node replaces the **Derived Value** node and provides the same functionality in a more general way. The **Derived Value** node will be removed from the COMSOL Desktop in a future version.

To add this node, right-click the Parametric Sweep (Job Configurations) or Batch (Job Configurations) node and select it from the **Results** submenu.

	The computed value is stored in a **Result** table under the Derived Values node (see Derived Values, Evaluation Groups, and Tables).

GENERAL

You select the Derived Values node to run from the **Run** list. The default behavior (**All**) is to run all Derived Values nodes. The node label is therefore by default set to **All Derived Values**.

RESULT

The **Table** setting decides in which **Table** under **Results** to store the computed values. The default is **New** for a new table.

From the **Update table** list, select one of the following options to control the behavior of table updates:

- **Clear initial table** (the default)
- **Append data to table**
- **Clear table for every new parameter value**. This option clears the table for every parameter in the sweep.

The **Parameters** column in the **Result** table contains the parameters that computed the numerical value, the **Value** column contains the numerical value, and the **Derived values** column contains the name (tag) of the **Derived Values** node that computed the numerical value. The information about the derived values nodes is useful when you have selected **All** from the **Run** list and the computed values come from different **Derived Values** nodes. Click the **Save to File** button ( ) and the **Load from File** button ( ) to save and load parameters to and from a text file or, if the license includes LiveLink™ *for* Excel®, a Microsoft Excel® Workbook spreadsheet.

Evaluate Derived Value

The **Evaluate Derived Values** node ( ) evaluates some or all Derived Values nodes defined in the **Results** branch of the model tree. To add this node, right-click the Parametric Sweep (Job Configurations) or Batch (Job Configurations) node and select it from the **Results** submenu.

	The evaluated derived values are stored in a **Result** table under the Derived Values node (see Derived Values, Evaluation Groups, and Tables).

GENERAL

You select the Derived Values nodes to evaluate from the **Evaluate** list. The default behavior (**All**) is to evaluate all Derived Values nodes. The node label is therefore by default set to **Evaluate All Derived Values**. Select **Manual** to add more than one but not all Derived Values nodes to the list that appears.

RESULT

From the **Update table** list, select one of the following options to control the behavior of table updates:

- **Clear initial table** (the default)
- **Append data to table**
- **Clear table for every new parameter value**. This option clears the table for every parameter in the sweep.

Clear the **Add parameters to description** check box if you do not want to include the parameters in the table description.

Export to File

The **Export to File** node ( ) runs an Export node defined in the **Export** branch of the model tree. The file is stored with a unique name that is generated from the current parameter values and the filename that the Export node has set. To add this node, right-click the Parametric or Batch job configuration node and select it from the **Results** submenu. Also see Exporting Data and Images.

GENERAL

Use the **Run** setting to select the Export node to run. The default behavior (**All**) is to run all Export nodes.

FILE

In the **File** section you set if the COMSOL software should overwrite files with the same name or if an error should occur, for example. If you clear the **Clear previous** check box, the job adds the values in each run instead of clearing the previous value.

From the **Add parameters to filename** list, choose **None** to use the same name for each parameter value (can be useful if you want to start batch jobs with different parameter values from the command line and use the resulting file for further postprocessing), choose **Parameter name and value** (the default) to add parameter names and values to the filename, or choose **Index**, which instead of parameter names and parameter values uses an index scheme `iX`, `iY`, …, where same indices relate to the same parameter value. The index option gives much shorter filenames.

OUTPUT

In the **Output** section you find the names of the files created during a sweep. You can select to **Open** a file by clicking the button. The file then opens in a web browser. The **Parameters** column in the **Output** table contains the parameter names, and the **Filename** column contains the corresponding filename.

External Class

The **External Class** node ( ) runs the main method of an external compiled Java class file. To add this node, right-click the Parametric Sweep (Job Configurations), Batch (Job Configurations), Function Sweep (Job Configurations), Material Sweep (Job Configurations), or Sequence node and select it from the **Other** submenu.

GENERAL

Before the external class is called, the system property `cs.currentmodel` is set to the name of the model that is calling the external class. You can set the name of the class file in the **Filename** field. Arguments can be passed to the main method with **Input**.

External Process

The **External Process** nodes ( ) under a Batch Data node contain information about the batch processes that the Batch (Job Configurations) node has started. Each **External Process** node is associated with a started batch job.

On the **External Process** node's **Settings** window, you can click these buttons, which are also available on The External Process Window, where you can monitor this node's progress.

- **Attach Job** button ( ) on the **Settings** window toolbar displays the progress of all the external processes. The GUI enters a progress mode in order to follow the progress of the external processes.
- **Stop all Processes** button ( ) sends the stop command to unfinished jobs.
- **Cancel all Processes** button ( ) sends the cancel command to unfinished jobs.
- **Clear Status** button ( ) clears the status of the selected job. Useful when the status indicates that the process is running but the process has failed.
- **Rerun Job** ( ) restarts the selected job.

After clicking the button, the status of the requested operation is viewed in the Process Status section.

GENERAL

The **Start command** field contains the command that was used to start the batch job. The **Filename** contains the filename of the model that is used in the batch job. Click **Open** when the batch job has finished to open the file.

PARAMETERS

Parameter names and **Parameter values** are listed in this section when available.

PROCESS STATUS

The log is updated when you choose **Update log**.

Method Call

The **Method Call** node ( ) runs a model method defined in a **Method Call** node under **Global Definitions** (see Method Calls). To add this node, right-click the Parametric Sweep (Job Configurations), Batch (Job Configurations), or Sequence node and select it from the **Other** submenu.

GENERAL

From the **Run** list, choose any available model method (or choose **None**). The sweep, batch job, or sequence will then run the method call as part of the job. The referenced Method Call is run during the study process or when the parent feature is explicitly run.

	When running model methods as part of a Batch feature or a cluster operation, model methods are limited to those that do not include user interface commands.

Geometry

The **Geometry** node ( ) runs a geometry sequence. To add this node, right-click the Parametric Sweep (Job Configurations), Batch (Job Configurations), or Sequence node and select it from the **Other** submenu.

GENERAL

Select the sequence to **Run** from the list. The default is to run **All** geometry sequences. If a specific geometry sequence is selected, you can click the **Go to Source** button ( ) to go to the **Geometry** node containing this sequence.

Job

You can add a **Job** node ( ) to run another job configuration. Right-click a Parametric Sweep (Job Configurations) or Batch (Job Configurations) to add the **Job** node.

GENERAL

Select the sequence to **Run** from the list. Recursive calls are detected and cause errors. Click the **Go to Source** button ( ) to go to the source job configuration node.

Mesh

The **Mesh** node ( ) runs a meshing sequence. To add this node, right-click the Parametric Sweep (Job Configurations), Batch (Job Configurations), or Sequence node and select it from the **Other** submenu.

GENERAL

Select the sequence to **Run** from the list. The default is to run **All** meshing sequences. Click the **Go to Source** button ( ) to go to the source meshing sequence.

Plot Group

The **Plot Group** node ( ) runs a sequence of plot groups, creating a plot in the Graphics window. To add this node, right-click the Parametric Sweep (Job Configurations) or Batch (Job Configurations) node and select it from the **Results** submenu. Also see Plot Groups and Plots.

GENERAL

Select the sequence to **Run** from the list. The default is to run **All** plot group nodes. Click the **Go to Source** button ( ) to go to the source plot. You can use an Export to File node to store the resulting plot in a file.

Save Model to File

The **Save Model to File** node ( ) stores a model in the state it is in at that point in the Batch or Parametric job configuration.

GENERAL

The **Overwrite previous model files** check box is selected by default. This means that previous models with the same name are overwritten. If a parametric sweep is running, the model is given a unique name based on the current parameter values.

From the **Add parameters to filename** list, choose **None** to use the same name for each parameter value, choose **Parameter name and value** (the default) to add parameter names and values to the filename, or choose **Index**, which instead of parameter names and parameter values uses an index scheme `iX`, `iY`, …, where same indices relate to the same parameter value. The index option gives much shorter filenames.

Enter a **Filename** including its network path, or click **Browse** to navigate to the location on your network where you want to store the model.

OUTPUT

The names of the saved models are stored in the table under **Output** where the **Filename** and **Parameters** are listed. Open a saved model in a new instance of COMSOL Multiphysics by selecting an **Open file** from the list or by clicking the **Open** button.

Solution

The **Solution** node ( ) runs a solver configuration for either a Parametric Sweep (Job Configurations) or Batch (Job Configurations).

GENERAL

Select the sequence to **Run** from the list. The default is to run **All** solver configurations. Click the **Go to Source** button ( ) to go to the source solver configuration.

OUTPUT

In this section you can control how the copy of the solutions are stored in the container. The name of the solution copy is generated from the current sequence name and parameter values. By default, the **Add solution to a container** check box is selected and the **Clear previous** list is set to **Clear container initially**. You can choose between **Clear container initially**, **Append solutions to container**, or **Clear container for every new parameter value**. To prevent any modifications to the container, clear the **Add solution to a container** check box. Select the **Regenerate default solver sequence** check box to generate a new solver sequence for each parameter value. If the check box is cleared, the solver sequence is not changed.

SOLUTION

This section contains a table of parameters and solutions after running a batch job or a parametric sweep. In the **Parameters** column you find the parameters in the parametric sweep, for example, and the values for those parameters at that step in the sweep. The corresponding row of the **Solution** column contains the name of the solution that corresponds to that set of parameter values. Typically, **Solution Store** nodes store those solutions, which are also available from the **Solution** list in the Solution datasets.

Harmonic Perturbation, Prestressed Analysis, and Small-Signal Analysis

In general, how the perturbation concept (and the study) is named is based on the application. For example, in the AC/DC Module and Semiconductor Module, it is referred to as *small-signal analysis*, whereas in the Structural Mechanics Module it is referred to as *prestressed analysis*. For the Batteries & Fuel Cells Module and the Electrodeposition Module, the studies are called *AC impedance*. For the CFD Module, and fluid flow in general, the term *perturbation* is sufficient.

See these study types for details about availability by module and physics interface:

- Frequency Domain Perturbation
- Small-Signal Analysis, Frequency Domain
- Prestressed Analyses Studies
- AC Impedance, Stationary
- AC Impedance, Time Dependent

- With the Acoustics Module and AC/DC Module, see *Loudspeaker Driver — Frequency-Domain Analysis*: Application Library path **Acoustics_Module/Electroacoustic_Transducers/loudspeaker_driver**.
- With the AC/DC Module, see *Small-Signal Analysis of an Inductor*: Application Library path **ACDC_Module/Inductive_Devices_and_Coils/small_signal_analysis_of_inductor**.

Frequency Domain Perturbation Study Step

Usually, two different right-hand side contributions (or loads) must be defined for each step. The first step needs a stationary value for the contribution, and the second step needs the perturbed value for the contribution. The definition of these contributions differs between exclusive and contributing nodes, and this relates to the **Harmonic Perturbation** node, which can be added to a wide variety of physics interface nodes (for example, the **Electric Potential** and **Electric Ground** nodes for the **Electric Currents** interface).

For plot settings made available by using this study, see Small-Signal Analysis, Prestressed Analysis, and Harmonic Perturbation Plot Settings. Also see Frequency Domain Perturbation.

Harmonic Perturbation — Exclusive and Contributing Nodes

A physics node that is exclusive has a **Harmonic Perturbation** subnode. This subnode adds harmonic perturbations to the right-hand-side contributions of its parent node (for example, a **Boundary Load** on the **Solid Mechanics** interface or a **Terminal** node on the **Electric Currents** interface). In the **Settings** window, the perturbation is entered for these contributions, which is only used when you solve for a **Frequency Domain Perturbation** study type. The

parent node defines the stationary value for the contribution, which is not present for the **Frequency Domain Perturbation** study.

	Harmonic perturbation nodes have a tilde over the top of the node, as in this example of a boundary level node ( ).

Nodes that are contributing (typically sources) can add their contributions as a harmonic perturbation. To define the stationary value for the contribution, you can add another node of the same type with the harmonic perturbation setting cleared.

For exclusive loads, there is only one way of doing it due to the exclusivity — as a subnode. This subnode cannot, in general, be a full copy of the original node because only some subsets of data can be changed.

As an example (prescribed displacement in structural mechanics), the prescribed displacement must have the same local system and the harmonic perturbation can only be applied to degrees of freedom already prescribed in the parent node.

Also, all contributing nodes are free to use the full set of settings. A static point load can be at one point in the global direction, and a local system for the harmonic contribution can be used.

	• Physics Exclusive and Contributing Node Types • For different plot settings made available, see Small-Signal Analysis, Prestressed Analysis, and Harmonic Perturbation Plot Settings.

Vibrating MEMS structures are often prestressed. For example, a cantilever structure could be prestressed by applying a DC voltage bias between the cantilever and a nearby ground plane; then vibrations could be driven at resonance by applying an additional AC bias. Another common example would be a clamped-clamped beam with a residual thermal stress.

21

Results Analysis and Plots

This chapter describes the functionality for visualization and analysis of simulation results in COMSOL Multiphysics®.

In this chapter:

- Results Overview
- Datasets
- Derived Values, Evaluation Groups, and Tables
- Plot Groups and Plots
- Exporting Data and Images
- Reports
- Printing and Capturing Screenshots

Results Overview

About the Results Branch

The **Results** branch in the COMSOL Multiphysics model tree contains tools for postprocessing and analyzing the results from your simulations, including visualizations, animations, data analysis, and reports. The main **Results** node contains all nodes that you create for such purposes. The **Settings** window contains the following sections: Update of Plots and Save Data in the Model.

UPDATE OF RESULTS

The default is to update all plots automatically when you, for example, recompute the solution, click the plot node, or change the color table for a plot. Select the **Only plot when requested** check box to keep the plots unchanged until you explicitly update the plot using the **Plot** button ( ). This can be useful, for example, for large models with complex plots where you do not want to update the plots directly when opening the model or when solving. A blue asterisk in the upper-right corner of the plot node's icon indicates that the plot is not updated ( ).

	Even when the **Only plot when requested** check box is selected, some changed style settings, such as the color table, are updated when you click a plot node, for example. Changes to style settings do not require that the COMSOL Multiphysics software reevaluates the plot data.

Select the **Recompute all plot data after solving** check box to compute a solution and the data for the dependent plots in one step. This can be convenient when it takes a long time to generate the data for the plots.

Select the **Reevaluate all evaluation groups after solving** check box to update the values of all derived values in evaluation groups (see About Evaluation Groups) when the solver finishes. Such an automatic update makes it easier to manage the contents of the evaluation group tables as you know that the data is up to date. It can also be convenient to make the solution and evaluation into one single step.

Changing the Automatic Update of Plots

There are preference settings that you can use to avoid automatic updates of plots when opening or creating models. Open The Preferences Dialog Box and click **Results**. Under **Automatic update of plots** you can set the preferences to update result plots.

- Select the **Disable for new models** check box to always disable the automatic update of plots for new models that you create (corresponds to selecting the **Only plot when requested** check box).
- Select the **Disable for models loaded from file (override saved)** check box to always disable the automatic update of plots for models that you open from file, such as models in the Application Libraries. The automatic update of plots is then disabled initially, regardless of the setting in the model.

Clearing Plot Data

To activate automatic updates of plots for the current model (if it has been turned off), clear the **Only plot when requested** check box in the **Settings** window for the **Result** node.

SAVING PLOT DATA IN THE MODEL

It is possible to save plot data in the model. When you open such a model, the stored plot data is used instead of the plot data being recomputed. Saving the plot data in the model is useful for plots that take a long time to recompute but do not contain a large amount of data. Examples include 1D plots (for example, a plot of an entity over time, which can take some time to generate but correspond to very little plot data), far-field plots (each point on the plot corresponds to an integral over the geometry), and slice plots over BEM solutions.

From the **Save plot data** list, choose one of the following options:

- **Automatic** (the default), which saves plot data for plots that take a long time to recompute but do not contain a large amount of data.
- **On**, to always save plot data in the model.
- **Off**, to never save plot data in the model.
- **Manual**, to control the saving of plot data in the model for each plot group. If you choose **Manual**, the main plot group node's **Settings** window includes a **Save Data in the Model** section, where you select the **Save plot data** check box to save that plot group's plot data in the model (by default, the plot data is not saved).

If you have saved data in the model, you can clear it by right-clicking the **Results** node and choosing **Clear Plot Data** or by clicking the **Clear Plot Data** button ( ) on the **Results** ribbon toolbar.

THE MAIN RESULTS ANALYSIS AND VISUALIZATION TOOLS

The **Results** branch groups the tools into the categories. During results analysis and visualization, there are these main operation types:

- Datasets. Datasets provide the source of data for plotting, for example, by indicating a solution and geometry or by transforming another dataset (for combining solutions or evaluating data along a cut line, for example).
- Derived Values, Evaluation Groups, and Tables. Derived values define the evaluation of integrals, maximum and minimum values, values of variables in points, and values of global variables. The evaluation results are stored in Table nodes under **Tables** and displayed in the **Table** window.
- Plot Groups and Plots. A plot group is a collection of plots to display simultaneously in the **Graphics** window. The plot groups include 1D plots (graphs), 2D plots (surface plots, for example), and 3D plots (volume plots, for example) with many different plot types and options. You can enable or disable plots in a plot group to determine the most applicable final image for your model or project. The physics interfaces create suitable default plots grouped in descriptive plot groups. Use a combination of datasets and plot groups to create cross-section plots.
- **Export** (see Exporting Data and Images): Export data, images, and animations from plot groups to files or use a player to visualize dynamic data.
- Reports. Create reports as HTML and Microsoft® Word documents that contain settings, selections, comments, plots, and other information about the model for easy viewing.

For quick single-click access to the functionality in the **Results** branch, the **Results** toolbar is available for adding plot groups, datasets, data evaluation tools, reports, and other results and visualization tools. When you select a plot group, a plot group contextual toolbar, with the same name as the plot group, appears. From that toolbar you can, for example, add new plots to the plot group and control the window to plot in.

	To display the **Views** node under **Results** ( ), click the **Show More Options** button ( ) and select **Views** in the **Show More Options** dialog box. This is useful, for example, when 2D axisymmetric revolved plots or 2D cut plane plots for 3D models are created. For details, see User-Defined Views.

	• Results Toolbar and Plot Group Contextual Toolbar • Results in the *COMSOL Multiphysics Programming Reference Manual*

Common Results Node Settings

Under Results Overview, there are common sections on the **Settings** windows. Table 21-1 provides cross references to the information relevant to these nodes, although the same section can also be available for other nodes throughout COMSOL Multiphysics. For the **Coloring and Style** section, see Table 21-2.

COMMON BUTTONS ON THE SETTINGS WINDOWS

The following buttons are available on many of the **Settings** windows and are mostly self-explanatory. These are not explicitly described or explained for every node.

- In general, use the **Move Up** ( ), **Move Down** ( ), or **Delete** ( ) button and the fields under tables to edit the table contents. Or right-click a table cell and select **Move Up**, **Move Down**, or **Delete**.
- At any time during plot creation, click the **Plot** button ( ) to preview a dataset or plot. Or right-click the node and select **Plot**.
- Click the **Add to Selection** ( ), **Remove from Selection** ( ), and **Clear Selection** ( ) buttons when working with geometric entities in the selection windows and when required.
- Click the **Range** button ( ) to define a range.
- Click the **Go to Source** button ( ) to move to the node to which the selection in the list next to the button refers.
- Click the **Evaluate** button ( ) or right-click the **Derived Values** node and select **Evaluate All** ( ) or **Clear and Evaluate All** ( ).

	• Going to the Source Node • About Selecting Geometric Entities • Entering Ranges and Vector-Valued Expressions

LINKS TO COMMON SETTINGS WINDOW DESCRIPTIONS

TABLE 21-1: DETAILS FOR THE COMMON SETTINGS SECTIONS

SETTINGS WINDOW SECTION	LINK TO MORE INFORMATION
Arrow Positioning	Arrow Positioning
Axis Data	Entering Axis Data for a Dataset
Coloring and Style	See Table 21-2 below and Defining the Coloring and Style
Data (for Plots)	Selecting a Dataset for Plots and Postprocessing
Data (for Derived Values and Export)	Inputs for Parametric Solver and Parametric Sweep Studies
Data Series Operation	Data Series Operation Settings for a Derived Value
Data for Parametric Solver and Parametric Sweep studies	Inputs for Parametric Solver and Parametric Sweep Studies
Element Filter	Defining Element Filters
Expression or Expressions	Expressions and Predefined Quantities
Extra Time Steps	Extra Time Steps for Trajectory Plots and Intersection Point Datasets
Inherit Style	Inheriting Style Options
Integration Settings	Integration Settings for a Derived Value
Levels	Defining the Number of Levels
Node Properties	Node Properties for Reports

TABLE 21-1: DETAILS FOR THE COMMON SETTINGS SECTIONS

SETTINGS WINDOW SECTION	LINK TO MORE INFORMATION
Parametric Solver and Parametric Sweep studies	Inputs for Parametric Solver and Parametric Sweep Studies
Plane Data	Defining Plane Data for a Dataset
Positioning	Principal Components and Positioning
Principal Components	Principal Components and Positioning
Quality	Entering Quality Settings for Plot Settings Windows
Radius	Expressions and Predefined Quantities and Radius Scale Factor
Range	Defining the Color and Data Ranges
r-Axis Data (polar plots)	Expressions and Predefined Quantities
Reverse color table	Coloring
Selection	About Selecting Geometric Entities
Shrink Elements	Defining Shrinking of Elements
Symmetrize color range	Symmetrize Color Range
Title	Plot Titles for Plot Groups and Plot Types and Using Special Formats and Symbols in Titles
Through-Thickness Location	Through-Thickness Location for Layered Materials
y-Axis Data (1D plots)	Expressions and Predefined Quantities

COLORING AND STYLE

TABLE 21-2: CROSS REFERENCES FOR THE COMMON COLORING AND STYLE SETTINGS SECTIONS

SECTION	LINK TO MORE INFORMATION
Arrow base	Arrow Base
Arrow color	Color
Arrow length	Arrow Length
Arrow scale factor	Arrow Scale Factor
Arrow type	Arrow Type
Bottom color	Coloring
Color legend	Color Legend
Coloring	Coloring
Color table	Coloring and Selecting Color Tables
Ellipse axis expressions	Ellipse Axis Expressions
Ellipse scale factor	Ellipse Scale Factor
Grid	Grid
Legend type	Legend Type
Line color	Color
Line markers	Line Markers or Marker Type
Line style (type, color, and width)	Line Style
Number of arrows	Arrow Length
Plot along lines when animating	Plot Along Lines When Animating
Point color	Color
Point motion	Point Motion

TABLE 21-2: CROSS REFERENCES FOR THE COMMON COLORING AND STYLE SETTINGS SECTIONS

SECTION	LINK TO MORE INFORMATION
Point radius	Point Radius
Point style, Point type	Point Style
Radius scale factor	Radius Scale Factor
Range quotient	Range Quotient
Reverse color gradient	Coloring
Reverse color table	Coloring
Scale factor	Scale Factor
Symmetrize color range	Coloring
Tail and Tail components	Tail and Tail Components
Tail scale factor	Tail Scale Factor
Top color	Coloring
Type (of histogram bins)	Type
Wireframe	Wireframe

- Plot Groups and Plots
- Derived Values, Evaluation Groups, and Tables
- Studies and Solvers
- Entering Ranges and Vector-Valued Expressions

Selecting a Dataset for Plots and Postprocessing

Almost every plot type's **Settings** window includes a **Data** section where you select a **Dataset** from a list of available and applicable datasets. **From parent** (the default) means that the plot uses the same dataset as the plot group to which it belongs. Click the **Go to Source** button ( ) to move to the dataset node to which the selection in the list next to the button refers.

Under **Data**, select a **Dataset**. Select:

- **From parent** (the default) to use the same dataset as the plot group to which it belongs.
- A **Data/Solution** or **Data/Parametric Solution** dataset to visualize a quantity from that solution.
- Other applicable types of datasets for the plot. For a 1D plot, for example, you can use a **Cut Line** dataset to visualize a quantity along the cut line (a cross section) or a **Parameterized Curve** dataset to visualize a quantity along the parameterized curve.
- **None** to not use any of the available datasets.

In addition, other lists can appear underneath the **Dataset** list for parametric, time-dependent, eigenmode, and adaptive mesh refinement solutions, as well as for evaluation of derived values:

- For parametric solutions, choose a parameter from the **Parameter value** list or, if applicable, from the **Parameter selection** list or separate lists from a parameter switch (see Inputs for Parametric Solver and Parametric Sweep Studies below). For a material sweep or function sweep, use the **Switch** list to choose a material or function for which to plot the corresponding solution.
- For time-dependent solutions, choose the time of the solution to use from the **Time** list for 2D and 3D plots. For 1D plots and data evaluation, choose from the **Time selection** list: **All** to use all time steps, **First**, **Last**, **From list** to select from a list of all time steps, **Manual** to enter a range of times as indices directly, or **Interpolated** to enter **Times**.

- For eigenmode solutions, choose the eigenmode or eigenvalue of the solution to use from the **Eigenmode** or **Eigenvalue** list. For 1D plots and data evaluation, choose from the **Eigenmode selection** or **Eigenvalue selection** list: **All** to use all eigenmodes, **First**, **Last**, **From list** to select from a list of all eigenmodes, or **Manual** to enter a range of eigenmodes as indices directly.
- For solutions using adaptive mesh refinement (selecting a **Solution** dataset for the adaptive mesh refinement solutions), choose a refinement level from the **Parameter selection (Refinement level)** list. Level 0 is the base level (no mesh adaptation), and the highest level represents the final adaptive mesh refinement solution. For 1D plots and data evaluation, choose from the **Parameter selection (Refinement level)** list: **All** to use all refinement levels, **First**, **Last**, **From list** to select from a list of all refinement levels, or **Manual** to enter a range of refinement levels as indices directly.

Datasets

Inputs for Parametric Solver and Parametric Sweep Studies

This information is useful when defining plots or derived values for **Parametric Solver** and **Parametric Sweep** studies using the settings in the **Data** section.

When setting parameters for parametric sweep studies in a node under **Results**, the available settings depend on the problem type. For a time-dependent parametric simulation, for example, you can select both time steps and parameter values. Similarly, an eigenvalue or eigenmode problem contains both eigenvalues or eigenmodes and parameter settings. In parametric sweeps, the time and eigenvalue settings are referred to as the inner solutions. Thus, in a graph plot for a parametric eigenvalue solution, for example, the axis source data for the x-axis data controls whether you want the inner solutions (eigenvalues) or outer solutions (parametric solutions) on the x-axis.

For **Parametric Solver** and **Parametric Sweep** studies, the **Parameter selection** or **Parameter values** list includes options for selecting solutions using the associated parameter values. For a parameter switch, there are lists (with the names of the corresponding **Parameters** nodes) of parameters for all parameter cases in all **Parameters** nodes that are included in the switch.

Any or all of the time steps can be selected from the **Time selection** list, or select **Interpolated** to get the same interpolated times for every parameter. Similar selections are available for eigenvalues and their associated eigenmodes.

- If **Interpolated** times is selected, enter **Times** or click the **Range** button ( ) to select and define specific times.
- If **Manual** times is selected, enter **Time indices** or click the **Range** button ( ) to select and define specific times.
- When available, from the **Table columns** list, select **Inner solutions** or **Outer solutions**. These options are available when there is a Parametric Sweep problem with dynamic inner solutions (that is to say, time, eigenvalue, or parametric solutions).
  - If **Inner solutions** is selected, when the **Evaluate** button (=) is clicked, the results table displays the *dynamic value* (for example, time, eigenvalue, or parametric) solutions in rows.
  - If **Outer solutions** is selected, when the **Evaluate** button (=) is clicked, the results table displays the *parameters* in rows.

- Entering Ranges and Vector-Valued Expressions
- Derived Values, Evaluation Groups, and Tables

Entering Axis Data for a Dataset

Revolution 1D and 2D datasets: Specify the revolution axis or point by a method based on the space dimension.

- For a **Revolution 1D** dataset, enter a value in the coordinate field to specify the revolution point.
- For a **Sector 2D** dataset, enter values for both the **x** and **y** coordinates (SI unit: m).
- For a **Mirror 2D**, **Revolution 2D**, or **Sector 3D** dataset, from the **Axis entry method** list, select **Two points** to enter the revolution axis by specifying two points or **Point and direction** to specify the axis by specifying one point and a direction vector.
  - If **Two points** is selected, enter coordinates in the **Point 1** and **Point 2** fields for **x** and **y** coordinates for the 2D datasets and for **x**, **y**, and **z** coordinates for the 3D dataset (SI unit: m).
  - If **Point and Direction** is selected, enter **Point** and **Direction** vectors for **x** and **y** coordinates for 2D datasets and for **x**, **y**, and **z** coordinates for the 3D dataset (SI unit: m).

Expressions and Predefined Quantities

When plotting and evaluating results, the COMSOL Multiphysics software provides a large number of predefined quantities that are specific to the physics interfaces in the model; mathematical functions and operators; and general quantities for the geometry, coordinate systems, and mesh.

The COMSOL Multiphysics software does not limit the results calculations to predefined quantities; you can plot and evaluate any function by entering the corresponding expression. You can combine numbers, parameters, mathematical constants, physical constants, variables, mathematical functions, unary operators, and binary operators. The **Expression** field or list is available for most plot types as well as for integration and data display and evaluation. You can enter any expression directly in the field or insert variables from a list of predefined quantities that you open by pressing Ctrl+Space or by clicking the **Insert Expression** ( ) button below the table.

In the **Settings** window for many nodes under **Derived Values**, for example, you can enter and evaluate multiple expressions in the **Expressions** section:

- Click the **Replace Expression** ( ) button to select a predefined quantity from the tree of expressions that opens and then replace the contents of the current row in the **Expression** table with the corresponding variable. For postprocessing features where you input an array of expressions (for example, Global plots and most numerical evaluation features), choose **All expressions in this group** for groups with many related quantities such as vector and tensor components to add all quantities in the group to the table of expressions.
- Click the **Add Expression** ( ) button to add the corresponding variable to the next row in the **Expression** table. Otherwise, this option is similar to the **Replace Expression** option.
- The **Unit** for the expression appears automatically if you replace or add a predefined expression. You can click in the unit's text field and type a compatible unit for the quantity if there is no unit defined or if you want to change the unit. If you use an incompatible unit, it is ignored and replaced by the default unit.
- Click in the **Description** field in a row to enter a description (or edit the default) for the corresponding expression.

Use the **Move Up** ( ), **Move Down** ( ), **Delete** ( ) buttons and the fields under tables to edit the table contents. Or right-click a table cell and select **Move Up**, **Move Down**, or **Delete**. In addition, use the **Clear Table** button ( ) to clear the entire table and the **Insert Expression** button ( ) to insert an available model variable or expression into the current expression field at the cursor position.

In the **Expression** sections, in the **Settings** windows for plot nodes, for example, you can:

- Click the **Replace Expression** ( ) button to select a predefined quantity from the tree of expressions that opens and then replace the contents of the **Expression** field with the corresponding variable.

- Click the **Insert Expression** ( ) button to insert the corresponding variable at the current position in the **Expression** field (you can also use Ctrl+Space).
- Select a **Unit** from the list. You can select from a predefined number of applicable units for the quantity that the variable represents, but you can also click in the unit's text field and type any compatible unit for that quantity to use a unit that is not in the list (for example, `mi/h` for miles per hour as a unit for a velocity quantity).
- Select the **Description** check box to enter a description (or edit the default).

When applicable, use the **Plot Previous Expression** ( ) and **Plot Next Expression** ( ) buttons to step through all expressions available in the same group of expressions at the lowest level of expressions that you can choose from in the tree of expressions that opens when clicking the **Insert Expression** or **Replace Expression** button.

When there are parameters that can affect the plotted quantities, they are listed under **Parameters** with their name value, unit, and description. You can change the values of the parameters to plot quantities using a specific set of parameter values. Click the **Insert Expression** button ( ) at the bottom of the section or press Ctrl+Space to insert a predefined expression or variable into the selected cell in the **Value** column.

PREDEFINED QUANTITIES

The predefined quantities that you get access to by clicking one of the above buttons are divided into categories based on where in the model they belong:

- A **Built In** group with built-in functions and operators:
  - A list of available **Mathematical Functions** such as trigonometric functions.
  - A list of available **Operators**, divided into **Differentiation**; **Evaluation**; **Expressions**; **Integral, average, and sum**; **Linearization**, **Other**; and **Scoped evaluation**.
- A **Model** group with quantities and variables related to the model:
  - For **Component 1** (and any other components in the model), each physics interface has its own list of predefined quantities. In addition, there is a **Definitions** list with variables for coordinate systems and user-defined variables, a **Geometry** list with geometry variables local to the component such as normal and tangent components, and, if applicable, a **Global** list with global (scalar) quantities defined by the physics interfaces.
  - A **Geometry** list with geometry variables such as the spatial coordinates and the domain index.
  - A **Global Definitions** list with user-defined parameters and variables and a variable for the number of DOFs.
  - A **Mesh** list with mesh variables such as element size and element quality.
  - A **Solver** list with variables for the time, eigenvalue, and frequency (when applicable).

	Type a filter text in the text field at the top of the list of predefined expressions to filter the list to only include the quantities that match the filter text. Using a filter text can help you find a predefined quantity of interest without having to search through the full list of quantities.

EVALUATION OF UNDEFINED QUANTITIES

During the evaluation of expressions, by default COMSOL Multiphysics does not report partially undefined quantities, and the program plots a quantity where it is defined. The plot is empty where the plotted data is undefined or "not-a-number" (NaN). The plot is also empty where the plotted data quantity is infinity or negative infinity. If a results quantity is undefined everywhere, an error occurs for all plot types.

ACCESSING OTHER SOLUTIONS THAN THE SELECTED SOLUTION

When you use the names of the dependent variables in a results expression, COMSOL Multiphysics uses the solution associated with the selected parameter value; eigenvalue; or time for a parametric analysis, eigenvalue analysis, or time-dependent analysis, respectively. To access other solutions in the model, use the `with` operator.

PROCESSING SOLUTIONS WITH A STORED LINEARIZATION POINT

If the solution being processed has a stored linearization point (such as for a harmonic perturbation or a small-signal analysis), several options are available for how to evaluate the expression in the **Expression evaluated for** list.

SPECIFYING A COORDINATE SYSTEM FOR VECTOR PLOTS

For vector plots based on some specific datasets, it is possible to choose a global Cartesian or a local cylindrical or cut-plane coordinate system to evaluate vectors in revolutions of axisymmetric models.

Vector Plots of Revolutions of 2D Axisymmetric Geometries

A **Coordinate system** list is available in the **Expression** section for plots that use a Revolution 1D or Revolution 2D dataset that has the default axis settings and points to a Solution, Mesh, Shell, or Layered Material dataset for an axisymmetric geometry. It is also available for plots using a Mirror dataset applied on a Revolution 2D dataset. From that list, choose **Global Cartesian** to enter a vector in the global Cartesian coordinate system or **Cylindrical** to enter a vector in a cylindrical coordinate system, which can be more convenient for a revolved (and possibly mirrored) axisymmetric geometry. The **Coordinate system** list is available for these plot types, when applicable:

- Arrow plots (**Arrow Volume**, **Arrow Surface**, and **Arrow Line**)
- **Deformation** subnodes
- Principal stress/strain plots (**Principal Stress Volume**, **Principal Stress Surface**, and **Principal Stress Line**)
- Scatter plots (**Scatter Volume** and **Scatter Surface**)
- **Streamline** plots

2D Vector Plots on Cut Planes

A **Coordinate system** list is available in the **Expression** section for 2D vector plots (**Arrow Surface** plots, for example) that use a **Cut Plane** dataset that points to a 3D Solution or Mesh dataset. From that list, you can choose **Cut Plane** to enter a 2D vector in the local cut-plane coordinates, or **Global Cartesian** to enter a 3D vector in the global Cartesian coordinate system.

Defining Plane Data for a Dataset

Select a **Plane type**: **Quick** (the default) to specify planes orthogonal to the coordinate axes or **General** to specify general planes. The **Plane type** consists of the sets of planes orthogonal to the coordinate axes applicable for the model geometry — for example, **xy-planes**, **yz-planes**, and **zx-planes** in 3D.

If **Quick** is selected:

- From the **Plane** list, select **xy-planes**, **yz-planes** (the default), **zx-planes**, **yx-planes**, **zy-planes**, or **zx-planes** as the set of planes orthogonal to the coordinate axes applicable for the model geometry. Specify the transverse coordinate by entering the location along the transverse coordinate axis.
- Enter the **x-**, **y-**, or **z-coordinates** in the field based on the **Plane** selection.
  - If **xy-planes** or **yx-planes** is selected, enter the **z-coordinates** (SI unit: m).
  - If **yz-planes or zy-planes** is selected, enter the **x-coordinates** (SI unit: m).
  - If **zx-planes** or **zx-planes** is selected, enter the **y-coordinates** (SI unit: m).

If **General** is selected:

- Select a **Plane entry method**: **Three points** or **Point and normal**. Enter **x**, **y**, and **z** coordinates.

  For the **Mirror 3D** dataset, select **Three points** to enter the mirror axis by specifying three points or **Point and normal** to specify the mirror axis by specifying one point and a normal vector.

  - If **Three points** is selected, enter **Point 1**, **Point 2**, and **Point 3** in the **x-**, **y-**, and **z-**coordinate fields (SI unit: m).
  - If **Point and normal** is selected, enter **Point** (SI unit: m) and **Normal** (dimensionless) data in the **x-**, **y-**, and **z-**coordinate fields.

For the **Cut Plane** dataset, select the **Additional parallel lines** check box to define multiple planes for plotting or evaluation, for example. Enter **Distances** from the original line in the field, or click the **Range** button ( ) to define a range of distances for additional cut planes. The **Distances** field refers to a direction that is normal to the cut plane.

Plot Titles for Plot Groups and Plot Types

Every plot group and plot type have a **Title** section where the **Title type** is selected and set. The options are **Automatic** (the default), **Custom** (if available), **Manual**, or **None**. An **Automatic** title is generated based on the type of plot or plots selected. Select **None** for no title. Select **Custom** to add existing information combined with custom prefix and suffix text to the title as described below, or select **Manual** to enter free text in the field, including optional evaluation of variables, include the current date and time and the filename (see Manual Plot Titles below).

NUMBER FORMATS

For all title types (except **None**) in the plot groups' settings, you can choose the following formats from the **Number format** list:

- **Default**: Numerical values hat come from the solvers are presented as-is. Numbers formatted during postprocessing use the **Output display precision** preference setting.
- **Automatic**: All numbers are formatted using the specified precision that you enter in the **Precision** field (default: 6). Select the **Show trailing zeros** check box if you what to display trailing zeros.
- **Engineering**: All numbers are formatted using engineering notation (such as `31.416E-6`; it is similar to scientific notation but with the powers of ten as multiples of three) using the specified precision that you enter in the **Precision** field (default: 6). Select the **Show trailing zeros** check box if you what to display trailing zeros.
- **Scientific**: All numbers are formatted using scientific notation (such as `3.1416E-5`) using the specified precision that you enter in the **Precision** field (default: 6). Select the **Show trailing zeros** check box if you what to display trailing zeros.
- **Stopwatch**: All numbers are formatted in decimal notation with a specified number of integer digits and decimals, which you enter in the **Number of integer digits** field (default: 3) and **Number of decimals** field (default: 2), respectively. Unnecessary zeros are always shown. For example, with the default settings, 17.1 would be formatted as `017.10`. The specified number of integer digits is not respected if the number is too large or if it is NaN or Inf. Select the **Always show the sign** check box to keep the width from changing for a sequence that includes both positive and negative values. Select the **Always show the imaginary part** check box to keep the width from changing for a sequence that includes both real numbers and numbers with a nonzero imaginary part.
- **Scientific stopwatch**: All numbers are formatted in scientific notation with one integer digit and a specified number of decimals and exponent digits. For example, with the default settings, 17.1 would be formatted as `1.71E1`. The settings are the same as for the **Stopwatch** format, with the addition of an **Always show the sign of the exponent** check box. Select it to keep the width from changing for a sequence that includes both positive and negative exponents.

CUSTOM PLOT TITLES

Solution

These settings are only available for the main plot groups. Under **Solution**, select the check boxes as needed.

- Select **Dataset** to include details about the dataset used for the plot.
- Select **Phase** to include information about the phase (when applicable).
- Select **Solution** to include the details about the solution (the time step or parameter values, for example) for the plot (when applicable).
- Select **Filename** to include the name of the MPH-file for the model that the plot belongs to.
- Select **Date** to include the current date (using a format like **Nov 7, 2016,** for example).
- Select **Time** to include the current time (using a format like **4:47:48 PM**, for example).

The title includes dataset settings taken from a plot if there is exactly one dataset that is taken from a plot, and the plot group's dataset is not used anywhere. The plot group's dataset has precedence over the plots' datasets.

Type and Data

Under **Type and data**, select the check boxes as needed.

- Select **Type** to include the plot type in the title.
- Select **Description** to include the variable details.
- Select **Expression** to include the variable expression in the title.
- Select **Unit** to include the variable unit.

User

Under **User**, enter text as needed:

- Enter text in the **Prefix** field to add free text at the front of any Solution title text string. For example, if all the **Dataset**, **Phase**, and **Solution** check boxes are selected, this text is first.
- Enter text in the **Suffix** field to add free text at the end of any Solution title text string. For example, if all the **Dataset**, **Phase**, and **Solution** check boxes are selected, this text is at the end of this information.

Layout

The **Use parameter indicator for solution and phase** check box is selected by default to display the solutions time, parameter value, or phase for the currently selected plot in the upper-left corner of the **Graphics** window.

MANUAL PLOT TITLES

For all manual plot titles, enter the plot title in the **Title** field. In the **Title** section for plot groups, you can use these additional settings for including the date, the time, the filename, or values of scalar variables, for example:

The **Parameter indicator** field contains a parameter indicator, such as the time for the current plot of a time-dependent solution, which appears in the upper-left corner of the **Graphics** window. You can edit the indicator if desired.

Select the **Allow evaluation of expressions** check box to make it possible to evaluate and display values in the title and the parameter indicator. You can then type, for example, `eval(t,min)` to evaluate the time t (in minutes). You can control the precision (number of digits) for the displayed values using a positive integer in the **Precision** field. In

addition to available scalar variables in the model, you can use the following variables to display date, time, filename, and so on:

TABLE 21-3: VARIABLES FOR PLOT TITLES

VARIABLE NAME	DESCRIPTION
FILENAME	The filename as the last part of the file path,
PATH	The full file path,
DATE	The current date, in the format Dec 8, 2016.
TIME	The current time, in the format 10:56:59 AM.
YEAR	The current year.
MONTH	The current month as a two-digit number.
DAY	The current day of the month as a two-digit number.
HOUR, HOUR24	The current hour as a two-digit number between 0 and 23.
HOUR12	The current hour as a two-digit number between 0 and 11.
AMPM	The AM/PM marker (AM or PM).
MINUTE	The current minute as a two-digit number.
SECOND	The current second as a two-digit number.

For example, use `eval(DATE)` to include the current date in the plot title or parameter indicator.

Using Special Formats and Symbols in Titles

Using Special Formats and Symbols in Titles

SUPPORT FOR FORMATTING AND SYMBOLS IN TEXTS

For the titles as well as the x-axis, y-axis, and z-axis labels, you can use formatted strings that include HTML tags, Greek letters, and mathematical symbols. The tables in the following sections provide information about supported format and symbols. In addition to ASCII characters, Greek letters, and the mathematical symbols listed in Table 21-17 and the following tables, the COMSOL Multiphysics software correctly displays any Unicode-based character that you paste into a title or label field.

To display a backslash (\) in, for example, a title, use `\backslash`.

HTML TAGS

You can use the following HTML tags in text strings for plot labels and titles:

TABLE 21-4: VALID HTML TAGS

HTML TAG	DESCRIPTION
<B> </B>	Enclosed text is rendered using a bold font.
<I> </I>	Enclosed text is rendered using an italic font.
	Enclosed text is rendered in subscript with the enclosed text slightly lower than the surrounding text.
	Enclosed text is rendered in superscript with the enclosed text slightly higher than the surrounding text.

TABLE 21-4: VALID HTML TAGS

HTML TAG	DESCRIPTION
<TT> </TT>	Enclosed text is rendered using a monospaced font.
<U> </U>	Enclosed text is underlined.

GREEK CHARACTERS

The texts in labels and titles in all plots support the following Greek character tags:

TABLE 21-5: VALID GREEK SYMBOL COMMANDS

COMMAND	SYMBOL	COMMAND	SYMBOL
\ALPHA	Α	\alpha	α
\BETA	Β	\beta	β
\GAMMA	Γ	\gamma	γ
\DELTA	Δ	\delta	δ
\EPSILON	Ε	\epsilon	ε
\ZETA	Ζ	\zeta	ζ
\ETA	Η	\eta	η
\THETA	Θ	\theta	θ
\IOTA	Ι	\iota	ι
\KAPPA	Κ	\kappa	κ
\LAMBDA	Λ	\lambda	λ
\MU	Μ	\mu	μ
\NU	Ν	\nu	ν
\XI	Ξ	\xi	ξ
\OMICRON	Ο	\omicron	ο
\PI	Π	\pi	π
\RHO	Ρ	\rho	ρ
\SIGMA	Σ	\sigma	σ
\TAU	Τ	\tau	τ
\UPSILON	Υ	\upsilon	υ
\PHI	Φ	\phi	φ
\CHI	Χ	\chi	χ
\PSI	Ψ	\psi	ψ
\OMEGA	Ω	\omega	ω

MATHEMATICAL SYMBOLS

For texts in titles and axis labels, you can use the following mathematical symbols:

TABLE 21-6: VALID MATHEMATICAL SYMBOL COMMANDS

COMMAND	SYMBOL	COMMAND	SYMBOL
\approx	≈	\bullet	•
\sim	~	\partial	∂
\prop	∝	\nabla	∇
\neq	≠	\prod	∏
\equiv	≡	\sum	∑
\lequal	≤	\sqrt	√

TABLE 21-6: VALID MATHEMATICAL SYMBOL COMMANDS

COMMAND	SYMBOL	COMMAND	SYMBOL
\gequal	≥	\integral	∫
\ll	>>	\oplus	⊕
\gg	<<	\otimes	⊗
\plusmin	±	\larrow	←
\infinity	∞	\rarrow	→
\deg	°	\lrarrow	↔
\cdot	·	\ldarrow	⇐
\times	×	\rdarrow	⇒

Arrow Positioning

Under **Arrow Positioning**, first select a **Placement** of the arrows: **Gauss points**, **Mesh nodes**, and, for Arrow Volume plots in 3D and Arrow Surface plots in 2D, **Grid**. For Arrow Surface plots in 3D and Arrow Line plots on edges in 2D and 3D, and plots of principal stresses and strains on surfaces you can further choose **Mesh elements**, **Uniform**, or **Uniform anisotropic**.

- Select **Gauss points** to position the arrows in the elements' Gauss points when a solution is available. For Arrow Volume plots in 3D and Arrow Surface plots in 2D you can further enter a **Maximum number of points** (default: 100,000 points). For other plots, specify the order of the Gauss points in the **Gauss point order** field (default: 1). A higher order increases the arrow density in each element.
- Select **Mesh nodes** for arrows positioned in the mesh element nodes (that is, more densely placed arrows where the mesh density is high). This option is available for Arrow Volume, Arrow Surface, and Arrow Edge plots. For Arrow Volume plots in 3D and Arrow Surface plots in 2D you can further enter a **Maximum number of points** (default: 100,000 points).

The following options are only available for Arrow Surface plots in 3D and Arrow Line plots on edges in 2D and 3D, and plots of principal stresses and strains on surfaces:

- Select **Mesh elements** for arrows positioned in the mesh element centroids (that is, more densely placed arrows where the mesh density is high). This option is only available for Principal Stress plots.
- Select **Uniform** (the default) for arrows positioned uniformly on the surface. Then enter the number of arrows to plot in the **Number of arrows** field (default: 200).
- Select **Uniform anisotropic** to position the arrows using an anisotropic density (that is, more arrows in some directions than in others). In addition to entering the number of arrows to plot in the **Number of arrows** field (default: 200), use the **x weight**, **y weight**, and (in 3D) **z weight** fields to give weights for the arrow density in the different directions (using positive scalar weights). The default weights are 1 in all directions. A higher value increases the arrow density in the corresponding direction.

For Arrow Volume plots in 3D and Arrow Surface plots in 2D, you can also choose **Grid** and then, based on space dimension, in the **x grid points**, **y grid points**, and **z grid points** fields (**r grid points** and **z grid points** in 2D axial symmetry), select an **Entry method**: **Number of points** or **Coordinates**:

- If **Number of points** is selected, enter the number of **Points** in each direction (default: 15).
- If **Coordinates** is selected, enter **Coordinates** or click the **Range** button ( ) to select and define specific coordinates.

	Entering Ranges and Vector-Valued Expressions

Principal Components and Positioning

These sections are available for the Principal Stress Volume, Principal Stress Surface, and Principal Stress Line plots:

PRINCIPAL COMPONENTS

Under **Principal Components**, select a **Type** — **Principal stress** or **Principal strain** — to visualize either the principal stresses (the default) or the principal strains as vectors.

From the **Data** list, choose one of the available principal stresses or strains (depending on the type selected above); for example, **Solid mechanics: Principal stresses**. The principal values and directions are then defined based on the selected data. If you choose **Manual**, you can enter the following values and direction components:

- Under **Principal values**, enter information in the **First**, **Second**, and **Third Value** fields. The default are the three principal stresses (`solid.sp1`, `solid.sp2`, and `solid.sp3`, for example, for a Solid Mechanics interface; the prefix is the Name of the physics interface node), plotted using red, green, and blue arrows, respectively.
- Under **Principal directions**, enter information in the table under **First**, **Second**, and **Third** for the **X**, **Y**, and **Z** coordinate fields. The defaults are the directions (eigenvectors) for the first, second, and third principal stress.

For transient problems, enter a **Time**.

POSITIONING

This section is not available for 3D Principal Stress Surface plots or for Principal Stress Line plots.

Under **Positioning**, select an **Entry method**: **Number of points** or **Coordinates** for the **X grid points**, **Y grid points**, and **Z grid points**. If **Number of points** is selected, enter the number of **Points** in each direction (the default is 7 for Principal Stress Volume plots and 15 for Principal Stress Surface plots). If **Coordinates** is selected, enter **Coordinates** (SI unit: m) or click the **Range** button ( ) to define a range of values.

	In the settings above, **X**, **Y**, and **Z** appear by default as the coordinate names if the plot uses data defined using the material frame. If the data is defined using a spatial frame, for example, **x**, **y**, and **z** appear instead.

Defining the Number of Levels

For Contour plots, Directivity plots, Isosurface plots, Contour datasets, and Isosurface datasets, under **Levels** and from the **Entry method** list, select **Number of Levels** or **Levels**.

If **Number of Levels** is selected, enter the total number of levels in the **Total levels** field (the default is 20 for plots and 5 for datasets). The **Round the levels** check box is selected by default to round the values of the levels. Otherwise, enter the values of the contour **Levels** or click the **Range** button ( ) to define a specific range of levels.

Selecting Color Tables

For many plot types you can select the color table to use for coloring the surfaces, boundaries, contours, streamlines, slices, and so on. These color tables use 1024 colors each. The best way to compare the color tables is to experiment with the options.

RAINBOW AND RAINBOW LIGHT

Rainbow is the default for plots that support color tables. The color ordering corresponds to the wavelengths of the visible part of the electromagnetic spectrum. It starts at the small-wavelength end with dark blue. The colors range through shades of blue, cyan, green, yellow, and red. The disadvantage of this color table is that people with color vision deficiencies (affecting up to 10% of technical audiences) cannot see distinctions between reds and greens.

RainbowLight is similar but uses lighter colors.

SPECTRUM

Spectrum is similar to the **Rainbow** color table but includes violet at the small-wavelength end of the visible spectrum. It also includes richer shades of green to more closely replicate the human perception of visible light. You can use it with the Ray Optics Module, for example, to accurately visualize polychromatic light.

THERMAL, THERMALEQUIDISTANT, THERMALLIGHT, AND HEATCAMERA

Thermal colors range from black through red and yellow to white, corresponding to the colors iron takes as it heats up.

ThermalEquidistant is similar but uses equal distances from black to red, yellow, and white, which means that the black and red regions become larger compared to the Thermal color table.

ThermalLight is similar but uses equal distances from dark red to orange, yellow, and white, which means that the region with the lowest values is red instead of black as it is in the Thermal color table.

HeatCamera colors range from black through blue, magenta, red, and yellow to white, corresponding to the colors in an image from a heat camera.

HeatCameraLight is similar to **HeatCamera** but with slightly lighter colors.

CYCLIC

The **Cyclic** color table is useful for displaying periodic functions because it has a sharp color gradient — it varies the hue component of the hue-saturation-value (HSV) color model, keeping the saturation value constant (equal to 1). The colors begin with red, then pass through yellow, green, cyan, blue, magenta, and finally return to red.

WAVE AND WAVELIGHT

The **Wave** color table is useful for data that naturally has positive and negative attributes in addition to a magnitude. As an example of a double-ended color scheme, it ranges linearly from blue to light gray, and then linearly from white to red. When the range of the visualized quantity is symmetric around zero, the color red or blue indicates whether the value is positive or negative, and the saturation indicates the magnitude.

People with color vision deficiencies can interpret the Wave color table because it does not use red-green-gray distinctions, making it efficient for 99.98% of the population.

WaveLight is similar and ranges linearly from a lighter blue to white (instead of light gray) and then linearly from white to a lighter red.

TRAFFIC AND TRAFFICLIGHT

The **Traffic** color table spans from green through yellow to red. **TrafficLight** is similar but uses lighter colors.

DISCO AND DISCOLIGHT

The **Disco** color table spans from red through magenta and cyan to blue. **DiscoLight** is similar but uses lighter colors.

AURORAAUSTRALIS, AURORABOREALIS, JUPITERAURORABOREALIS, AND TWILIGHT

The **AuroraAustralis**, **AuroraBorealis**, and **JupiterAuroraBorealis** color tables resemble the colors in the aurora australis (southern light), aurora borealis (northern light), and Jupiter's aurora, respectively. The AuroraAustralis color table spans from white through green and indigo to blue. The AuroraBorealis color table also spans from white through green and indigo to blue but with a larger indigo portion. The JupiterAuroraBorealis color table spans from black through blue to white.

The **Twilight** color table uses colors associated with twilight (the illumination of the Earth's lower atmosphere when the Sun is not directly visible), spanning colors from pink through white to blue.

CIVIDIS

The **Cividis** color table uses yellow and blue colors in a color table that is suited for normal vision, a deuteranomaly, or red-green colorblindness. It was created by Jamie Nuñez, Ryan Renslow, and Chris Anderton at the Biological Sciences Division of the Pacific Northwest National Laboratory (located in Richland, Washington state, United States).

GRAYSCALE

The **GrayScale** color table uses the linear gray scale from black to white — the easiest palette to understand and order.

Gray scale plots are often easier to use for publication. People can also better perceive structural detail in a gray scale than with color. Use this color table to increase the probability that a plot is interpreted correctly by people with color vision deficiencies.

GRAYPRINT

The **GrayPrint** color table varies linearly from dark gray (RGB: 0.95, 0.95, 0.95) to light gray (RGB: 0.05, 0.05, 0.05). Choose this to overcome two difficulties that the GrayScale color table has when used for printing on paper — it gives the impression of being dominated by dark colors, and white is indistinguishable from the background.

CUSTOM COLOR TABLES

You can also add your own continuous color tables and discrete color tables as text files with RGB data that you store in the `data/colortables/` folder in the directory where COMSOL Multiphysics is installed or in the user settings directory `.comsol/55` under your local home directory.

	Color Tables, Cycle Colors, and Color Themes in the *COMSOL Multiphysics Programming Reference Manual.*

Defining the Color and Data Ranges

Under **Range**, select the **Manual color range** and **Manual data range** check boxes to manually override the color range and data range, respectively, with values in the **Minimum** and **Maximum** field, or use the sliders to control values that defined the range of the color scale and the data itself.

Defining the Coloring and Style

Depending on the plot type and space dimension, the following options are available and defined under **Coloring and Style**. The items are listed in alphabetical order.

ARROW BASE

Select **Tail** (the default) to position the arrow's tail at the arrow position, **Head** to position the arrow's head at the arrow position, or **Center** to position the center of the arrow at the arrow position.

ARROW LENGTH

Select an **Arrow length**:

- **Proportional** (the default), so that the length of the arrows is proportional to the magnitude of the quantity they represent.
- **Normalized**, so that all arrows have the same length.
- **Logarithmic**, so that the length of the arrows is proportional to the natural logarithm of the magnitude of the quantity they represent. This makes arrows representing small values relatively larger. The value in the **Range quotient** field (default: 100) determines the ratio between the smallest and largest values in the range of values for the logarithmic arrow length.

Number of Arrows

When **Uniform** or **Uniform anisotropic** is selected as the **Placement**, also specify the **Number of arrows** (default: 200).

ARROW SCALE FACTOR

Select the **Scale factor** check box to enter a scalar number to scale the arrows or use the slider to select.

ARROW TYPE

Select an **Arrow type**: **Arrow**, **Arrowhead**, or **Cone**. Also, for Arrow Volume, Arrow Surface, Arrow Line, Arrow Point, Point Trajectories, and Ray Trajectories plots, select **Double arrow** for a double arrow with two arrowheads, which can represent a moment or torque, for example. Arrowheads are not available for Principal Stress and Coordinate System plots. When selecting the **Ellipse** point style type in Point Trajectories and Ray Trajectories plots, you can select **None** from the **Arrow type** list to not display any arrows.

COLOR

Surface and Contour Plots

For surface and contour plots, for example, from the **Coloring** list select to use a **Color table** (see Coloring) or select **Uniform** to use a single color from the **Color** list. You can also select **Custom** to define a custom color from the colored list below (on Windows) or by clicking the **Color** button (on Linux and macOS) and then selecting a color from the color palette.

Arrow Plots

For arrows, and unless a **Color Expression** subnode determines the arrow colors, select an arrow **Color** or select **Custom** to define a custom color from the colored list below (on Windows) or by clicking the **Color** button (on Linux and macOS) and then selecting a color from the color palette.

Graph Plots

For lines in graph plots, select a **Color**: **Custom**, **Cycle**, **Cycle (reset)**, **Black**, **Blue**, **Cyan**, **Gray**, **Green**, **Magenta**, **Red**, **White**, or **Yellow**.

If you select **Cycle**, it cycles through all the colors; if you have more than one line plot in a plot group and want to cycle through the same set of colors, select **Cycle (reset)**. The colors are defined in a text file. If there is a file `graphcyclecolors.txt` in the preferences directory (`.comsol\v55` in your user directory), then it is used. Otherwise, `/data/colors/graphcyclecolors.txt` under the COMSOL Multiphysics installation directory is used. For information about the file format, see About Cycle Colors in the *COMSOL Multiphysics Programming Reference Manual*.

If you select **Custom**, define a custom color from the colored list below (on Windows) or by clicking the **Color** button (on Linux and macOS) and then selecting a color from the color palette. Enter a line **Width** or use the slider to select.

The Color Palette

In the color palette that opens, you can choose from a number of basic colors, or click **Define custom colors** to open a section where you can specify a specific color using sliders to define the R (red), G (green), and B (blue) components. You can also click one of the RGB values to enter a specific value (0–255). Click **Add to custom colors** to add it to the set of available custom colors.

COLOR LEGEND

The **Color legend** check box is selected by default. Click to clear the check box if required. The legend position is determined by the settings in the **Color Legend** section in the Settings window for the parent Plot Group node.

	You can adjust the default precision settings if required. Open The Preferences Dialog Box and click **Graphics and Plot Windows**. Under **Display format (number of digits)**, in the **Color legend** field, enter an integer between 1 and 15 for the number of digits for the values displayed on the color legend. The default setting is 5 digits.

COLORING

Select a **Coloring**: **Color table** (default), **Uniform**, or **Gradient**.

If **Color table** is selected, and if the default color table (**Rainbow** in most plots) is not suitable for the plot, try other options. See Selecting Color Tables for details.

If **Uniform** is selected, select a **Color** or **Custom** to choose a different color.

If **Gradient** is selected, define the coloring as a gradient between two colors, which you specify from the **Top color** and **Bottom color** lists.

Reverse Color Table

Select the **Reverse color table** check box to reverse the order of the colors in the color table (if **Coloring** is set to **Color table**).

Reverse Color Gradient

Select the **Reverse color gradient** check box to reverse the order of the colors in the color gradient (if **Coloring** is set to **Gradient**).

Symmetrize Color Range

Select the **Symmetrize color range** check box to obtain a color range centered around zero for a color table or color gradient. This setting is useful for visualizing wave-like solutions with zero bias.

	Selecting Color Tables

ELLIPSE AXIS EXPRESSIONS

Define the semi-major and semi-minor axes of the ellipse using vector expressions. For the **Semi-major axis expression** and **Semi-minor axis expression**, click the **Replace Expression** button ( ) to select a predefined expression to replace the current expression, or press Ctrl+Space to insert a predefined expression (dimensionless). The expressions available are based on the physics interfaces used in the model. If the Geometrical Optics interface is used to compute ray intensity, the default expressions (typically `gop.pax`, `gop.pay`, and `gop.paz` for the semi-major

axis and `gop.pbx`, `gop.pby`, and `gop.pbz` for the semi-minor axis) represent the shape and orientation of the polarization ellipse.

ELLIPSE ENTRY METHOD

Define the entry method for an ellipse as the point type from the **Ellipse entry method**: Choose **Number of ellipses** to enter a **Maximum number of ellipses**, or choose **Collection of times** to enter a number times in the **Times** field.

ELLIPSE SCALE FACTOR

Select the **Ellipse scale factor** check box to enter a scalar or use the slider to select.

FIXED SIZE

Select the **Fixed size** check box to make the sphere radii have constant radius when zooming a plot using one of the following particle-style plot types that plot spheres in 2D and 3D: Particle Trajectories, Ray Trajectories, and Point Trajectories; Particle Tracing and Particle Tracing with Mass; Poincaré Map; and Phase Portrait.

FUNCTION

In a Table Surface plot, choose **Continuous** (the default) to consider the (x, y, data) triplets as samples of a function data = $f(x,y)$, where $f(x,y)$ is continuous, or choose **Discrete** to treat the samples as discrete and draw them as large pixels.

GRID

Select a **Grid**: **None** (the default), **Fine**, **Normal**, or **Coarse**. If **Fine**, **Normal**, or **Coarse** is selected, also choose a **Color** for the grid.

INTERPOLATION AND NUMBER OF INTERPOLATED TIMES

Particle trajectories can appear jagged because the output times for the simulation are too few to result in a smooth plot. You can improve the particle trajectories by using a uniform interpolation of the data for the particle trajectories. From the **Interpolation** list, select **None** for no interpolation (the default), or select **Uniform** to use a uniform interpolation of the data using additional interpolated times defined in the **Number of interpolated times** field. The default is 100 interpolated times.

	Interpolation of lines is only available for Particle Trajectories plots, which are available for use with Particle datasets created with the Particle Tracing Module.

LEGEND TYPE

For contour, isosurface, and directivity plots, the **Legend type** list is available. You can choose **Automatic** (the default for contour and directivity plots; not available for isosurfaces), **Filled** for a filled (joined) legend, or **Line** (the default for isosurface plots), for a legend with separated lines for the levels. The **Automatic** setting provides a filled legend for filled contours and a line legend for line and tube contours.

	For isosurface plots using interactive levels, only legends with lines are applicable, and the **Legend type** is then not available.

LINE MARKERS OR MARKER TYPE

Select a **Marker** type: **None**, **Cycle**, **Asterisk**, **Circle**, **Diamond**, **Plus sign**, **Point**, **Square**, **Star**, or **Triangle**.

If a marker is selected (excluding **None**), then from the **Positioning** list, select **Interpolated** or **In data points**. For **Interpolated**, enter the **Number** of markers to display (the default is 8; the maximum is 10,000 markers) or use the

slider to select. If **In data points** is selected, the markers appear in the data points for the plot (which for a plot of a 1D solution are the mesh nodes).

	The line markers are only available for Histogram plots using a continuous function.

	If a graph plot contains isolated points, they appear as markers if the **Position** is set to **In data points**; otherwise, isolated points are not visible when using markers.

LINE STYLE

The line styles available depend on the type of plot and the space dimension and include these options:

- From the **Line** list (for line graphs and point graphs, for example): **Cycle**, **Solid**, **Dotted**, **Dashed**, or **Dash-dot**. If **Cycle** is selected, it cycles through all the options.
- From the **Line type** or **Type** list (for line, streamline, and particle trajectory plots, for example): **Line**, **Tube**, or **None**. For 3D Streamline, Particle Trajectories, Point Trajectories, and Ray Trajectories plots, **Ribbon** is also available. Ribbons are an alternative to tubes for visualization of, for example, the vorticity of a flow field.
  - If **Tube** is selected, enter a **Tube radius expression** (the radius of the tube); click the **Replace Expression** button ( ) to select a predefined expression to replace the current expression, or press Ctrl+Space to insert a predefined expression (SI unit: m). The default is 1 m.
  - If **Ribbon** is selected for streamlines, enter a width for the ribbons in the **Width expression** field; click the **Replace Expression** button ( ) to select a predefined expression to replace the current expression, or press Ctrl+Space to insert a predefined expression (SI unit: m). The default is 1 m. Select the **Width scale factor** check box to enter a user-defined scaling of the ribbons' width in the associated field. By default, the program scales the width automatically.
  - If **Ribbon** is selected for particle trajectories, specify a direction for the ribbons: At **Ribbon direction**, click the **Replace Expression** button ( ) to select a predefined expression to replace the current expression, or press Ctrl+Space to insert a predefined expression (SI unit: m). You can also edit the expressions in the **Direction, x component**; **Direction, y component**; and **Direction, z component** fields. Select the **Width scale factor** check box to enter a user-defined scaling of the ribbons' width in the associated field. By default, the program scales the width automatically.
- In Particle Trajectories plots, you can also choose an interpolation from the **Interpolation** list: **None** (the default) or **Uniform**. For the uniform interpolation, specify the **Number of interpolated times** (default value: 100).
- For line plots where you specify the line width, enter a line **Width** or use the slider to select. If a line plot (graph plot) contains isolated data points (for example, in a logarithmic plot where parts of the data cannot be plotted), those data points follow the line width down to a minimum size for the points. Such isolated data points are replaced with line markers, if markers are used and plotted in the data points.

PLOT ALONG LINES WHEN ANIMATING

If the plan is to create an **Animation** report, select the **Plot along lines when animating** check box. This is useful for Particle Trajectories, Particle Tracing, Particle Tracing with Mass, and Point Trajectories plots.

POINT MOTION

Select a **Point motion** to specify what should happen **When particles leaves domain**: **Stick to boundary** (to plot the points on the boundary at the exit point) or **Disappear** (to not render these points at all).

For static fields, specify the **End time** in the **Advanced** section. It is possible that all particles have left the domain at the selected time. In that case, all points appear at the outflow boundary if **Stick to boundary** is selected, and no points appear if **Disappear** is selected. To make the points appear, specify an earlier end time.

POINT RADIUS

Enter a **Point radius expression**; click the **Replace Expression** button ( ) to select a predefined expression to replace the current expression, or press Ctrl+Space to insert a predefined expression (SI unit: m). The default is 1 mm.

POINT STYLE

Under **Point style**, select a **Type**: **Point**, **None**, **Comet tail**, **Arrow**, or **Ellipse**. If **Point** or **Comet tail** is selected, enter a Point Radius and Radius Scale Factor.

Comet tail and **Arrow** are available with the **Particle Tracing**, **Particle Tracing with Mass**, **Particle Trajectories**, **Point Trajectories**, and **Ray Trajectories** plots. All of them except **Point Trajectories** and **Ray Trajectories** require a license for the Particle Tracing Module. See Particle Tracing, Particle Tracing with Mass, Particle Trajectories, and Point Trajectories. The **Ray Trajectories** plot requires a license for the Acoustics Module or the Ray Optics Module.

Comet tail plots provide a convenient way to indicate the direction of travel of particles at a given point in time. The tail of the comet typically points in the opposite direction to the particle velocity; visually, it is the same as the tail of a comet approaching the sun.

These additional settings are available when **Comet tail** is selected: Tail and Tail Components and Tail Scale Factor.

Ellipse is available with the **Particle Trajectories**, **Point Trajectories**, and **Ray Trajectories** plots.

Ellipses provide a convenient way to visualize the polarization of rays. The eccentricity of the ellipse indicates the degree to which it is linearly or circularly polarized. For elliptical and circular polarization, arrows on the perimeter of the ellipse can be used to distinguish between left- and right-handed polarization.

RADIUS SCALE FACTOR

Select the **Radius scale factor** check box to enter a scalar number for the scale factor.

RANGE QUOTIENT

If **Logarithmic** is selected as the arrow length, enter a **Range quotient**, which is the ratio between the maximum arrow length and the arrow length below which no arrow is drawn. The default is 100.

SCALE FACTOR

Enter a **Scale factor** for the arrows using a positive scalar number in the field or by using the associated slider (for scale factors between 0 and 1).

TAIL AND TAIL COMPONENTS

Define the length and direction of the comet tail as a vector expression. For the **Tail expression**, click the **Replace Expression** button ( ) to insert a predefined expression into the **Tail, x component**; **Tail, y component**; and **Tail, x component** (for 3D plots) fields. The expressions available are based on the physics interfaces used in the model. The default expressions (typically `pt.nvx`, `p.nvy`, and `pt.nvz`) represent the negative of the particle velocity.

TAIL SCALE FACTOR

Select the **Tail scale factor** check box to enter a scalar number between 0 and 1 or use the slider to select.

TYPE

Select **Curve** or **Solid** from the **Type** list for the type of histogram to plot when the **Function** list under **Output** is set to **Discrete**. Select **Solid** for filled histogram bins.

WIREFRAME

To plot only on the visualization mesh, select the **Wireframe** check box, and then click **Plot** ( ). This displays the surface plot as a triangular grid.

Defining Element Filters

For Mesh and Volume plots, you can specify the elements to display under **Element Filter**. Without filtering, the plots display all elements. Using element filters, you can highlight elements based on, for example, their mesh quality, size, or location.

To define an element filter, select the **Enable filter** check box and select a **Criterion**: **Logical expression** (the default), **Random**, or **Expression**. For Mesh plots, **Worst quality**, **Best quality**, and **Size** are also available, which filters mesh elements with the worst element, best quality, or size, respectively. When you choose **Size**, the fraction that you specify is the fraction with the smallest elements. For example, a fraction of 0.1 plots the smallest 10% of the elements.

- If **Expression** or **Logical expression** is selected, enter an **Expression** in the text field. For example, an expression can be `abs(x-y)` to plot a fraction of elements closest to the line $y = x$ (that is, the fraction that you specify is the fraction where the expression evaluates to the smallest values). An example of a logical expression is `(h>0.1)&&(h<0.4)`, which shows the elements with an element size between 0.1 and 0.4 (`h` is the predefined variable for the mesh element size). Another example is `x>0`, which plots elements in the right half-plane only. The expression can include unit syntax such as `y<50[cm]`. Click the **Replace Expression** ( ) button to select a predefined quantity and replace the entire contents of the **Expression** field with the corresponding variable as the only expression.
- If **Random**, **Expression**, **Worst quality**, **Best quality**, or **Size** is selected, specify the **Fraction** of elements (0–1) to show (the default is 1, which means that all elements are included).

Defining Shrinking of Elements

For Mesh and Volume plots, under **Shrink Elements**, enter an **Element scale factor** between 0 and 1 to scale elements in the mesh plot. The default value is 1, which means no shrinking. Using a smaller value shrinks the size of the elements in the plot accordingly. This effect can be useful for visualizing individual elements and for looking at interior elements in a volume plot.

Entering Quality Settings for Plot Settings Windows

Many plots have a **Quality** section where you can select a plot resolution, enforce continuity, and specify the use of accurate derivative recovery. The steps for this section vary slightly based on the plot but are basically as follows.

1. Under **Quality**, select a plot **Resolution**: **Finer**, **Fine**, **Normal**, **Coarse**, **No refinement**, or **Custom**. A higher resolution means that elements are split into smaller patches during rendering. The **Finer**, **Fine**, **Normal**, **Coarse** use heuristics to determine a suitable resolution. For **Custom**, enter a positive integer (default: 1) in the **Element refinement**

field. A higher value means higher resolution. The refinements is done by subdividing the element edges. See the following figure, which shows the refinement levels 1, 2, and 3:

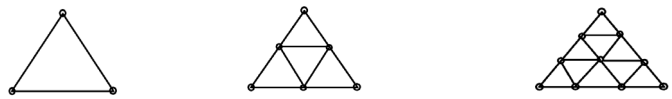

Figure 21-1: Element refinement levels 1 (left), 2 (middle), and 3 (right).

For new plots, you can also specify a preference for the resolution on the **Results** page in the **Preferences** dialog box.

	Custom refinement applies to the base dataset. The number of elements in the model can therefore increase radically if the plot uses, for example, a revolve dataset, since the refinement is applied to the solution dataset.

2 To enforce continuity on discontinuous data, under **Quality**, from the **Smoothing** list, select:

- **None**: to plot elements independently.
- **Inside material domains** (the default): to smooth the quantity within domains shared by the same material but not across material boundaries. Here, *material* is interpreted in a wider sense than just a physical material. Some physics interfaces implement material groups, which are sets of domains that are considered as being suitable for internal smoothing.
- **Internal**: to smooth the quantity inside the geometry, but no smoothing takes place across borders between domains with different settings.
- **Everywhere**: to apply smoothing to the entire geometry.
- **Expression**: to use an expression to indicate where smoothing should occur. Enter an expression in the **Expression** field such that smoothing occurs where the expression is continuous. The default expression is `dom`, the domain variable, which is equivalent to the **Internal** smoothing. You can also — in a surface plot, for example — use `material.domain`, which is an indicator variable for domains that share the same material (see Material Group Indicator Variables) and is equivalent to the **Inside material domains** setting.

The smoothing is done so that if there are two different values in points with the same coordinates, the plotted value is the mean of those two values.

The default, **Inside material domains**, is to smooth the quantity except across borders between domains with different materials, where there is often a sharp transition from one material to another or between different types of physics. See the screenshots below that shows a material discontinuity where smoothing everywhere blurs the

border (left) whereas smoothing inside material domains (right) keeps the material discontinuity intact. In these plots, no refinement is used to show the smoothing effect more clearly.

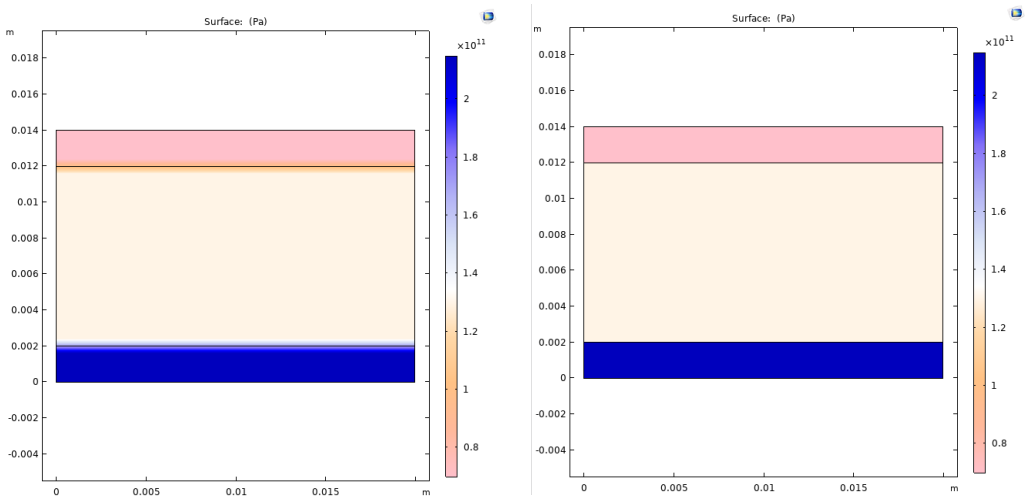

Figure 21-2: Smoothing everywhere (left) versus smoothing inside material domains (right).

3 Under **Quality**, the **Recover** default is **Off** because the accurate derivative recovery takes processing time. This recovery is a polynomial-preserving recovery that recovers fields with derivatives such as stresses or fluxes with a higher theoretical convergence than smoothing (see Polynomial-Preserving Derivative Recovery).

To use accurate derivative recovery, from the **Recover** list, select:

- **Within domains**: to perform recovery inside domains.
- **Everywhere**: to apply recovery to all domain boundaries.

The **Recover** option only affects variables that are defined on domains.

POLYNOMIAL-PRESERVING DERIVATIVE RECOVERY

Plotting and evaluating stresses or fluxes boils down to evaluating space derivatives of the dependent variables. By default, computing a derivative like ux or uxx (first and second derivatives of u with respect to x) is done by evaluating the derivative of the shape functions used in the finite element approximation. These values have poorer accuracy than the solution u itself. For example, uxx is identically 0 if u is defined using linear elements. COMSOL Multiphysics evaluates the derivatives (and u itself) using a polynomial-preserving recovery technique by Z. Zhang (see Ref. 1). The recovery is only applied on variables that are discretized using Lagrange shape functions.

The polynomial-preserving recovery is a variant of the superconvergent patch recovery by Zienkiewicz and Zhu that forms a higher-order approximation of the solution on a patch of mesh elements around each mesh vertex. For regular meshes, the convergence rate of the recovered gradient is $O(h^{p+1})$ — the same as for the solution itself. Near boundaries, the accuracy is not as good, and it might even be worse than without recovery. Results evaluation is about 2–5 times slower when using polynomial-preserving derivative recovery.

By default, the accurate derivative recovery smooths the derivatives within each group of domains with equal settings. Thus, there is no smoothing across material discontinuities. You find the setting for accurate derivative recovery in the plot node's **Settings** windows' **Quality** section. Due to performance reasons, the default value for **Recover** list is **Off** (that is, no accurate derivative recovery). Select **Within domains** to smooth the derivatives within each domain group (that is, groups of domains with equal settings). Select **Everywhere** to smooth the derivatives across the entire geometry.

Reference

1. A. Naga and Z. Zhang, "The Polynomial-Preserving Recovery for Higher Order Finite Element Methods in 2D and 3D", *Discrete and Continuous Dynamical Systems — Series B*, vol. 5, pp. 769–798, 2005.

Inheriting Style Options

All 2D and 3D plot types (except Mesh) have the **Inherit Style** section. Use this functionality to maintain a consistent style between plots.

After there is more than one plot in a plot group, the **Plot** list makes these plots available to select the attributes you want to maintain between plots. For any plot with this section, and if the check box is applicable to the plot type, all check boxes are selected by default. The available attributes vary based on the plot type and include:

- Arrow scale factor
- Background color
- Color
- Color and data range
- Deform scale factor
- Ellipse scale factor
- Frame
- Height scale factor
- Ribbon width scale factor
- Point radius scale factor
- Tail scale factor
- Tube radius scale factor

The default **Plot** selected is **None**, which means that styles are not inherited for any plots. If you want to inherit a style, add and select a plot type from the **Plot** list. All attributes automatically inherit the style from the selected plot. To prevent a plot attribute from being inherited, clear the check box or select **None** from the **Plot** list.

Integration Settings for a Derived Value

Select a **Method**: **Auto** (the default), **Integration**, or **Summation**.

- **Auto** — the default method, which computes the integral for fields by numerical integration and for reaction forces by summation. Predefined quantities for reaction forces use summation instead of integration. Also, if an expression is specified for the integrand using the `reacf` operator, the automatic setting chooses the summation method.
- **Integration** — the standard numerical integration method (quadrature).
- **Summation** — a summation method is useful for calculating reaction forces. The summation method finds all nodes on the boundary, evaluates the expression in the nodes, and sums up the values. Reaction force variables are predefined in the structural mechanics interfaces.

The COMSOL Multiphysics software determines an appropriate **Integration order** for the expression when you use integration. To change the order, select the check box and enter an integer (0 or larger; default: 4). The COMSOL Multiphysics software performs the integration elementwise using numeric quadrature of the selected order.

	For 2D axisymmetric models, **Volume Integration** and **Surface Integration** are available and active by default. COMSOL Multiphysics multiplies the expression (integrand) with `2*pi*r` prior to integration to compute the corresponding volume or surface integral if you do the next step.

- For **Surface Integration**, the **Compute volume integral** check box is selected by default.
- For **Line Integration**, the **Compute surface integral** check box is selected by default.

	Reaction force variables in axisymmetric models include the $2\pi r$ factor, so summation over them always gives you the revolved surface force or volume force.

Data Series Operation Settings for a Derived Value

These settings are available for all **Derived Value** types. In addition to performing the averaging on each solution in a data series (from a parametric or Time Dependent study) an operation can be applied such as the integral or maximum of the averaged quantity for the data series so that the result is, for example, the integral or maximum of the averaged quantity for each step in the data series. The following operators are available from the **Operation** list. Select:

- **None** (the default) to not apply any data series operation.
- **Average** to evaluate the average of the data series.
- **Maximum** to evaluate the maximum of the data series. If **Maximum** is selected, select an option from the **Find maximum of** list: **Real part** or **Absolute value**.
- **Minimum** to evaluate the minimum of the data series. If **Minimum** is selected, select an option from the **Find minimum of** list: **Real part** or **Absolute value**.
- **Integral** to evaluate the integral of the data series.
- **RMS** (the *root mean square* or *quadratic mean*).
- **Standard deviation**.
- **Variance**.

For the **Average**, **Integral**, **RMS**, **Standard deviation**, and **Variance** operations, there is also a **Method** list available for choosing one of the following computational methods:

- **Auto** (the default): The automatic method uses integration whenever it is possible; otherwise, it uses summation.

- **Integration**: Compute the values using integration (treating the data as samples of a continuous function; see note below).
- **Summation**: Compute the values using summation of the data values. Summation can be useful when there are parameters on the rows, or different load cases, which you want to compute a linearly sum for rather than an integral.

	The data series operations treat the data points as samples of a continuous function if the rows of a table, when evaluated without a data series operation, come from a transient or parametric solver (not if they come from an outer parametric sweep). The average, integral, standard deviation, variance, and RMS values, when you use integration, are all computed by performing one or more integrations of this continuous function using the trapezoidal method. The results are consistent with viewing the data series as samples of a continuous function but are not consistent with viewing the data points as discrete samples. For such cases, use summation instead.

Small-Signal Analysis, Prestressed Analysis, and Harmonic Perturbation Plot Settings

	For details about the solvers and studies, including the availability by module, see Harmonic Perturbation, Prestressed Analysis, and Small-Signal Analysis.

Solutions computed for a harmonic perturbation study step (for example, the second step of a small-signal analysis or prestressed analysis) consist of two separate parts: the linearization point and the perturbation solution. These parts can be combined in a number of different ways when evaluating an expression. This is controlled by the **Expression evaluated for** list, which appears in many postprocessing nodes if the selected dataset is based on the result of a harmonic perturbation:

EXPRESSION EVALUATED FOR

Select an option from the **Expression evaluated for** list: **Static solution**, **Harmonic perturbation**, **Total instantaneous solution**, **Average for total solution**, **RMS for total solution**, or **Peak value for total solution**. Each option is described below.

	See Built-In Operators for information about the operators described in this section.

	For the correct evaluation of small-signal lumped parameters like electrical impedance and inductance, understanding the `lindev` operator is mandatory; see the note at the end of the Harmonic Perturbation section.

Static Solution

The expression is evaluated by taking the values of any dependent variables from the linearization point part of the solution. This is achieved by wrapping the expression in the `linpoint` operator.

Harmonic Perturbation

If **Harmonic perturbation** is selected, the **Compute differential** check box is also available. If the check box is not selected, the expression is evaluated by taking the values of any dependent variables from the harmonic perturbation part of the solution.

If the **Compute differential** check box is selected (the default), the differential of the expression with respect to the perturbation is computed and evaluated at the linearization point. This is achieved by wrapping the expression in the `lindev` operator. For expressions that are linear in the solution, the two options are the same.

!	Do not select the **Compute differential** check box when evaluating predefined or user-defined small-signal lumped parameters. Lumped parameters are in general defined as a ratio of an applied excitation to a measured response; for example, electric impedance is the ratio of an applied voltage to the resulting current. In a small-signal sense such quantities must be defined using the `lindev` operator as, for example, `lindev("voltage")/lindev("current")`. Some physics interfaces provide built-in postprocessing variables for lumped parameters that use this type of definition. When wrapping such an expression or related variable once more in the `lindev` operator, the result is wrong (zero).

Total Instantaneous Solution

The expression is evaluated by adding the linearization point and the harmonic perturbation and taking the real part of this sum. This is achieved by wrapping the expression in the `lintotal` operator. The phase and amplitude of the harmonic perturbation part can be set in the corresponding dataset.

Average for Total Solution

This is the same as evaluating for **Total instantaneous solution** and then averaging over all phases of the harmonic perturbation. This is achieved by wrapping the expression in the `lintotalavg` operator.

RMS for Total Solution

This is the same as evaluating for **Total instantaneous solution** and then taking the RMS over all phases of the harmonic perturbation. This is achieved by wrapping the expression in the `lintotalrms` operator.

Peak Value for Total Solution

This is the same as evaluating for **Total instantaneous solution** and then taking the maximum over all phases of the harmonic perturbation. This is achieved by wrapping the expression in the `lintotalpeak` operator.

EXAMPLE: EVALUATING STRESSES IN A PRESTRESSED ANALYSIS

To illustrate the effect of the different **Expression evaluated for** settings, consider a prestressed solid mechanics model. The solution has been obtained by first computing a prestressed state, in a Stationary study step, and then adding a small harmonic perturbation on top of the stationary solution, using a Frequency Domain, Perturbation study step. The linearization point solution, $\mathbf{u}_0$, is therefore the stationary displacements from the prestress step, and the harmonic perturbation part of the solution, $\mathbf{u}_p$, is the small complex-valued harmonic displacements induced by the harmonic perturbation step. The instantaneous displacements are therefore

$$\mathbf{u}(t) = \mathbf{u}_0 + \mathrm{real}(\mathbf{u}_p e^{i\omega t})$$

A common measure of the equivalent stress level in a solid is the von Mises stress, σ_e. This is a nonlinear function of the strain and therefore of the displacements. Assuming that the harmonic perturbation is small, the von Mises stress can be linearized around the linearization point

$$\sigma_e(t) = \sigma_e(\mathbf{u}_0 + \mathrm{real}(\mathbf{u}_p e^{i\omega t})) \approx \sigma_e(\mathbf{u}_0) + \nabla\sigma_e(\mathbf{u}_0) \cdot \mathrm{real}(\mathbf{u}_p e^{i\omega t}) = \sigma_{e0} + \mathrm{real}(\sigma_{ep} e^{i\omega t}) \qquad (21\text{-}1)$$

where the gradient is taken with respect to the solution degrees of freedom. Now suppose you evaluate the von Mises stress using each of the available options for **Expression evaluated for**:

Static solution: Evaluating using the static solution returns the von Mises stress from the prestress step, σ_{e0}.

Harmonic perturbation, Compute differential on: Evaluating using the harmonic perturbation solution with the **Compute differential** option selected returns the complex-valued amplitude of the linearized change in von Mises stress, σ_{ep}, due to the harmonic perturbation. For a perturbation that is small compared to the linearization point, the von Mises stress varies harmonically

$$\sigma_e(t) \approx \sigma_{e0} + \text{real}(\sigma_{ep} e^{i\omega t})$$

while for a large perturbation, the stress variation is no longer harmonic, due to its nonlinearity.

Harmonic perturbation, Compute differential off: Evaluating using the harmonic perturbation solution with the **Compute differential** option cleared returns the von Mises stress expression evaluated by substituting the complex perturbation solution, $\mathbf{u}_p$. This number, $\sigma_e(\mathbf{u}_p)$, is essentially a nonsensical value because it involves products of complex-valued amplitudes.

Total instantaneous solution: Evaluating using the total instantaneous solution option returns the von Mises stress expression evaluated using the total solution at the phase, θ, specified in the current dataset:

$$\sigma_e(\theta) = \sigma_e(\mathbf{u}_0 + \text{real}(\mathbf{u}_p e^{i\theta}))$$

Average for total solution: The average for the total solution is computed over one period by varying the phase, θ, in the interval $[0, 2\pi]$:

$$\sigma_e^{\text{mean}} = \frac{1}{2\pi}\int_0^{2\pi} \sigma_e(\mathbf{u}_0 + \text{real}(\mathbf{u}_p e^{i\theta}))d\theta$$

RMS for total solution: The RMS value for the total solution is computed over one period by varying the phase, θ, in the interval $[0, 2\pi]$:

$$\sigma_e^{\text{RMS}} = \sqrt{\frac{1}{2\pi}\int_0^{2\pi} \sigma_e(\mathbf{u}_0 + \text{real}(\mathbf{u}_p e^{i\theta}))^2 d\theta}$$

Peak value for total solution: The peak value for the total solution is computed as the maximum of $\sigma_e(\theta)$ for any phase θ in the interval $[0, 2\pi]$.

Extra Time Steps for Trajectory Plots and Intersection Point Datasets

For trajectory plots, such as Particle Trajectories and Ray Trajectories, it is often useful to plot the particle or ray positions at specific times other than the time steps stored in the solution. This is often the case when particles or rays are reflected at boundaries; the exact reflection times are usually not known in advance, so they cannot be specified in the settings for a transient study step and must be computed instead. Similarly, intersection point datasets are not guaranteed to find all intersections close to wall bounces.

The **Extra Time Steps** section is always available in Intersection Point 2D and Intersection Point 3D datasets. It also appears in when a plot supports the rendering of particle or ray positions at time steps other than those stored in the solution. The plot must refer to a valid **Particle** or **Ray** dataset.

Select an option from the **Maximum number of extra time steps rendered** list: **None**, **Specified number of times** (the default), or **Proportional to the number of solution times**. For **None** the trajectories are only plotted at the stored solution times.

For **Specified number of times** enter a nonnegative integer for the **Maximum number of extra time steps**. The default is 100. This value is the total number of extra time steps, typically corresponding to reflection or velocity reinitialization times, that can be plotted along each trajectory in addition to the stored solution times.

For **Proportional** to the number of solution times enter a nonnegative integer for the **Proportionality factor**. The default is 1. The maximum number of extra times shown in the trajectory plot is the product of the proportionality factor and the number of stored solution times shown in the plot.

Node Properties for Reports

When applicable, the **Node Properties** section provides settings for including the node properties for all model nodes. Select the check boxes **Include author**, **Include date created**, and **Include application version** (for the report **Root** node) or **Include version** (for other report nodes) to include those properties. For **Comments**, the default setting (the report **Root** node excepted) — **From referenced node** — takes the comments from the node in the model; select **Custom** to add other comments or **None** for no comments.

Through-Thickness Location for Layered Materials

The **Through-Thickness Location** section is available in the Settings windows for **Line Average**, **Surface Average**, **Line Integration**, **Surface Integration**, **Line Maximum**, **Surface Maximum**, **Line Minimum**, and **Surface Minimum** nodes under **Derived Values**, when a Layered Material dataset is selected. It is also available for **Point Evaluation** and **Point Matrix Evaluation** nodes when a Layered Material dataset is selected, but the **Location input** list is not available, and the local z-coordinate can only be a scalar.

THROUGH-THICKNESS LOCATION

To determine the value of the evaluation, a through-thickness location is required.

From the **Location input** list, choose **Take from dataset** (the default) or **Manual**. For **Manual**, select a **Location definition**: **Reference surface** (the default), **Physical**, or **Relative**.

Once **Reference surface** is selected, the through-thickness location is taken from a layered material definition specified under **Materials** in a **Layered Material Link** or **Layered Material Stack** node, or in a **Material** node that represents a single-layer material.

Enter one or more values for a **Local z-coordinate** for the **Physical** option or **Local z-coordinate [-1,1]** for the **Relative** option. The bottom, middle, and top through-thickness location of a layered material, having a total thickness d, can be defined as follows:

- Bottom: 0 (Physical) or –1 (Relative)
- Middle: $d/2$ (Physical) or 0 (Relative)
- Top: d (Physical) or 1(Relative)

Click the **Range** button ( ) to define a range of local z-coordinates using the **Range** dialog box.

Datasets

About Datasets

Datasets refer to the source of data for creating **Plots** and **Reports**. It can be a **Solution**, a **Mesh**, or some transformation or cut plane applied to other datasets — that is, you can create new datasets from other datasets. You add datasets to the **Datasets** branch ( ) under **Results**.

All plots refer to datasets; the solutions are always available as default datasets. Characteristics of a dataset include:

- A visualization mesh
- Mapping to a previous dataset (except for solutions and meshes)
- Ability to refer the evaluation to the previous dataset

The base dataset maps to a solution and geometry or some other source of data. An example of a transformation dataset is Revolution 2D, which sweeps a 2D dataset into 3D.

	Cut Point, Cut Line, Cut Plane, Edge 2D, Edge 3D, and Surface datasets are used in combination with plot groups and Line, Point, and Surface graphs to create cross-sectional plots and plots for data in points, along lines and edges, and on cut planes and surfaces.

ADDING A DATASET TO THE MODEL BUILDER

In the **Model Builder** under **Results** ( ), right-click **Datasets** ( ) and select an option from the context menu. Continue defining each dataset as described. See Table 21-7 for links to all the types of datasets.

ADDING A SELECTION TO A DATASET

For datasets that contain data defined in the model, such as **Solution** datasets ( ) and **Mesh** datasets ( ), you can add a selection so that the results and plots use a subset of the geometry. As an alternative, you can add Selection subnode to some of the plot nodes. See Selection (Plot Attribute).

To add a Selection to a dataset:

- In the **Results** toolbar, click **Attributes>Selection** ( ).
- Under **Results>Datasets**, right-click a **Solution** dataset and choose **Selection** ( ).

In the **Selection** subnode ( ), select the geometric entities for which you want to include data in the dataset using the **Graphics** window and the settings under **Geometric Entity Selection** in the **Selection** subnode's **Settings** window. Select the **Propagate to lower dimensions** check box to make a selection of domains, for example, also include their adjacent boundaries, edges, and points. This can be convenient when using Surface plots on the boundaries of a 3D geometry, for example.

	Also **Remesh a Deformed Configuration** for a dataset. See Deformed Configuration.

	• See Dataset Types for links to the dataset descriptions. • Creating Named Selections • Meshing • Introduction to Solvers and Studies

Dataset Types

The following table lists the available dataset types, including links to the description of the dataset's properties and settings:

TABLE 21-7: DATASET TYPES

LINK	DESCRIPTION AND PLOT USE
Array 1D, Array 2D, and Array 3D	Create 1D, 2D, and 3D arrays of other datasets, so that you can plot the same data in multiple locations as an array of plots.
Average and Integral	Creates a dataset that computes the average of another dataset, for example to plot the average.
Contour (Dataset)	To analyze on 2D contour lines. Use this dataset for 2D arrow plots, 2D line plots, and 1D global plots.
Cut Line 2D and Cut Line 3D	To create lines through 2D and 3D geometry to visualize along the line. Use this dataset to create 2D or 3D cross-sections line plots.
Cut Plane	Plots on cut planes are made on 3D datasets and can be visualized in either 2D or 3D plot groups.
Cut Point 1D, Cut Point 2D, and Cut Point 3D	Plot and evaluate a value in a certain point along time or along a parametric solution. Use this dataset to create 1D, 2D, or 3D cross-sections point plots.
Edge 2D and Edge 3D	Plot and evaluate a value along a boundary (edge) in 2D or an edge in 3D. Use this dataset to create plots for data on edges.
Extrusion 1D and Extrusion 2D	To extrude data in postprocessing from 1D to 2D and from 2D to 3D.
Filter	To filter data using a lower bound, upper bound, or both a lower and upper bound.
Grid 1D, Grid 2D, and Grid 3D	Create a dataset that can evaluate functions or expressions from a solution dataset on a created domain with a grid.
Intersection Point 2D and Intersection Point 3D	Enable evaluation of expressions at the intersection points of particle or ray trajectories and a surface and evaluate intersection points with a more general surface. Requires the Particle Tracing Module or Ray Optics Module.
Isosurface (Dataset)	To visualize isosurfaces in 3D. Use this dataset to create arrow surface plots, surface plots, and contour plots. In addition, the contour dataset can be applied to the isosurface dataset.
Join	To join the solution data from two Solution datasets. This makes it possible to evaluate and plot the difference between two solutions, for example.

TABLE 21-7: DATASET TYPES

LINK	DESCRIPTION AND PLOT USE
Layered Material	To create a volume/domain (3D) dataset for a layered shell physics defined using a surface/boundary (2D) geometry and a built-in extra dimension (1D) geometry. Use this dataset to plot or evaluate layered shell quantities on a domain level or its lower dimensions. Requires the Composite Materials Module, AC/DC Module, or Heat Transfer Module.
Maximum and Minimum	Creates a dataset that computes the maximum or minimum of another dataset.
Mesh (Dataset)	To make a mesh available for visualization and results analysis. Use a Mesh node in a plot group to get the actual plot.
Mirror 2D and Mirror 3D	To extend a solution defined on one side of an axis to the other side of the axis. Useful for visualization of a solution to an axisymmetric problem or plane of reflection.
Parameterized Curve 2D and Parameterized Curve 3D	To visualize data along a general parameterized curve in 2D or 3D. Use this dataset to create a line plot in its original dimension and as a line graph plot in 1D.
Parameterized Surface	To visualize data on a general parameterized surface. Use this dataset with a surface plot in its original dimension and as any plot type in 2D.
Parametric Extrusion 1D and Parametric Extrusion 2D	To extend another dataset by using a parameter, such as time, as a dimension.
Particle (Dataset)	To visualize particle traces computed by a Particle Tracing interface. Requires the Particle Tracing Module.
Particle Bin	To organize particles into groups and treating each group as a single entity for the purpose of using other particle postprocessing features. Requires the Particle Tracing Module.
Ray (Dataset)	To visualize ray traces computed by a Geometrical Optics or Ray Acoustics interface. Requires the Ray Optics Module or the Acoustics Module.
Ray Bin	To organize rays into groups and treating each group as a single entity for the purpose of using other ray tracing features. Requires the Ray Optics Module or the Acoustics Module.
Receiver 2D and Receiver 3D	To visualize the impulse response for a ray acoustics simulation of, for example, room acoustics or underwater acoustics. Requires the Acoustics Module.
Response Spectrum 2D and Response Spectrum 3D	To perform a response spectrum analysis (a modal-based method for estimating the structural response to a transient, nondeterministic event). Requires the Structural Mechanics Module.
Revolution 1D and Revolution 2D	Use a revolution dataset to visualize a 2D or 1D axisymmetric solution in 3D and 2D, respectively.

TABLE 21-7: DATASET TYPES

LINK	DESCRIPTION AND PLOT USE
Sector 2D and Sector 3D	To exploit symmetries in the model to reduce the model size and then, if needed, use rotations and reflections to plot the solution for the entire geometry.
Shell	To visualize the top and bottom surfaces of a shell in 3D. Requires the Structural Mechanics Module.
Solution	To make solutions available for visualization and results analysis. Solvers create Solution datasets automatically.
Surface (Dataset)	Plot and evaluate a value on surfaces (boundaries) in 3D. Use this dataset to create plots for data on surfaces.
Time Average and Time Integral	To compute the time average or time integral of time-dependent data from another dataset.

Common Results Node Settings

Array 1D, Array 2D, and Array 3D

Select an **Array 1D** ( ), **Array 2D** ( ), or **Array 3D** ( ) dataset, found under the **More Datasets**, **More 2D Datasets**, and **More 3D Datasets** submenus, to create an array of data for plots based on another dataset. The **Array 1D**, **Array 2D**, and **Array 3D** nodes' **Settings** windows include the following sections:

DATA

From the **Dataset** list, choose the dataset that you want to duplicate into an array. The list includes all available datasets that are compatible with the Array dataset (1D datasets for Array 1D, 2D datasets for Array 2D, and 3D datasets for Array 3D).

INPUT

In this section you define the part of space that the array is created from. From the **Method** list, select **Automatic** (the default) to use the source dataset's bounding box as input. Alternatively, select **Manual** to specify the part of space manually:

- Under **Size**, define the dimensions of the input space in the **x**, **y** (2D and 3D), and (3D only) **z** fields (the names of the space coordinates can vary).
- Under **Position**, define the base point for the input space. From the **Base** list, select **Corner** (the default) or **Center** to use a location at the lower-left corner or the center as the base position. Then enter the base position in the **x**, **y**, and (3D only) **z** fields (the names of the space coordinates can vary).

ARRAY SIZE

Here you specify the size of the array as the number of cells in each direction. From the **Array type**, choose **Linear**, **Rectangular** (2D only), or **Three-dimensional** (3D only). For **Linear**, enter the number of cells as a positive integer in the **Size** field. You specify the distance between each cell in the **Displacement** section below. For **Rectangular** and **Three-dimensional**, you specify the number of cells as positive integers in each i direction in the **x size**, **y size**, and **z**

size (3D only) fields. For 1D, enter the number of cells in the **x size** field (the names of the space coordinates can vary).

DISPLACEMENT

In this section you specify the displacement used to separate each cell in the array. From the **Method** list, select **Automatic** (the default) to a displacement that is the same as the size defined in the **Input** section. This means that to create an array of cells that have the same size as the underlying dataset's bounding box, you can use **Automatic** both here and in the **Input** section. Alternatively, select **Manual** to specify the displacement manually by entering displacement distances in the **x**, **y** (2D and 3D), and **z** (3D only) fields (the names of the space coordinates can vary). The displacement cannot be smaller than the size of the input cell.

ADVANCED

If needed, you can define variables for the array dataset. Select the **Define variables** check box to define the following variables:

- Under **Space variables**, you create variables that evaluate to the coordinates in the dataset's coordinate system. Enter variable names in the **x**, **y** (2D and 3D), and **z** (3D only) fields (the names of the space coordinates can vary).
- Under **Cell variables**, you create integer variables that identify the current cell in the array. For example, the 3D cell with variable values (0, 0, 0) corresponds to the underlying dataset's cell. Enter variable names in the **x**, **y**, and **z** (3D only) fields (the names of the space coordinates can vary).

Select the **Floquet-Bloch periodicity** check box if you want to incorporate phase changes from Floquet-Bloch periodicity. The Floquet-Bloch periodicity corresponds to the relation

$$u(r+R) = u(r)\,e^{-ikR}$$

where R is the lattice vector, and k is the wave number. For Array datasets, the lattice vector when evaluating in a cell of the array is the displacement from the base cell. You define the Floquet-Bloch periodicity using the components of the wave vector $\mathbf{k}$ (SI unit: 1/m) in the **x**, **y** (2D and 3D), and **z** (3D only) fields under **Wave vector**. The wave vector can be complex, and you can use this to model gains and losses over an array.

Clear the **Check for overlap between cells** check box to make it possible to, for example, create a hexagonal lattice by composing two linear arrays. It also makes it possible to create rectangular lattices where the unit cells are not rectangles. To create such lattices, you have to create an array of arrays, where you in the outer array specify the right shift.

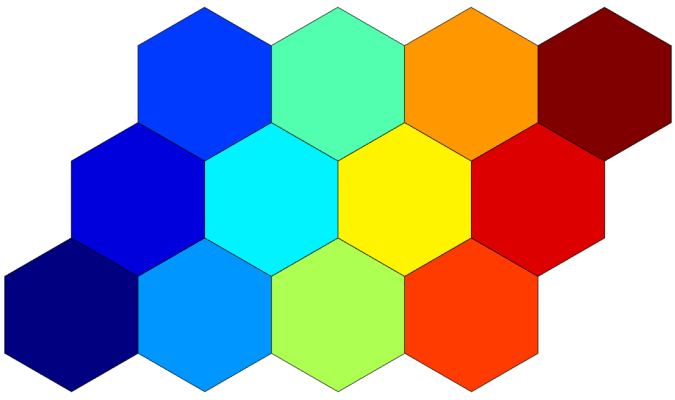

Figure 21-3: A hexagonal lattice created using two Array 2D datasets, where the "outer" dataset's setting has turned off the check for overlap between cells.

Average and Integral

Select an **Average** (AV) or **Integral** (∫du) dataset, found under the **More Datasets** submenu, to compute the average or integral of another dataset, for example, to plot the average or integral.

DATA

Select a **Dataset** for the data to compute the average or integral. To compute the average or integral for a **Solution** dataset, use a **Selection** to define the geometric entity (point, boundary, edge, or domain) to integrate over. Right-click the dataset and select **Add Selection**.

SETTINGS

Select an integration **Method**: **Auto** (the default), **Integration**, or **Summation**.

- **Auto** — Computes the integral for fields by numerical integration and for reaction forces by summation. Predefined quantities for reaction forces use summation instead of integration. Also, to specify an expression for the integrand, use the `reacf` operator, and the automatic setting chooses the summation method.
- **Integration** — the standard numerical integration method (quadrature).
- **Summation** — a summation method useful for computing reaction forces. The summation method finds all nodes on the boundary, evaluates the expression in the nodes and sums up the values. Reaction force variables are predefined in the structural mechanics interfaces. This is selected instead of Integration for reaction forces when the automatic selection of integration method is active.

For **Integration order**, the COMSOL Multiphysics software determines an appropriate integration order for the expression when you use integration. The default is 4. Select the check box to make a different entry in the field (as an integer that is 0 or larger). COMSOL Multiphysics then performs the integration elementwise using numeric quadrature of the selected order.

Select a **Geometry level** — **Take from dataset** (the default), **Volume**, **Surface**, **Line**, or **Point**. The default means the highest geometry dimension for the data in the dataset; typically volumes in 3D, surfaces in 2D, and lines in 1D.

If the dataset represents data for a 1D or 2D axisymmetric geometry, the **Compute surface integral** (1D axial symmetry) and **Compute volume integral** (2D axial symmetry) check boxes are selected by default to compute an average or integral that takes the axial symmetry into account. COMSOL Multiphysics then multiplies the expression (integrand) with `2*pi*r` prior to integration to compute the corresponding volume or surface integral.

	For an integral evaluation dataset example see *Flow Past a Cylinder*: Application Library path **COMSOL_Multiphysics/Fluid_Dynamics/cylinder_flow**.

Contour (Dataset)

Use a **Contour** ( ) dataset, selected from the **More 2D Datasets** submenu, for results evaluation on 2D contour lines. Contour lines cannot be parameterized in general, so only 2D arrow plots, 2D line plots, and 1D global plots can be used to visualize the dataset. Only 2D datasets can be used.

	Go to Common Results Node Settings for links to information about these sections: **Data**, **Expression**, and **Levels**.

Cut Line 2D and Cut Line 3D

Use a **Cut Line 2D** ( ) or **Cut Line 3D** ( ) dataset to create lines through 2D or 3D geometries to visualize along the line. All plots and results analysis nodes available in 1D are available for cut line datasets as well as 3D plots and results analysis nodes for edges. These datasets are also used to create cross-section line plots. The resolution of cut lines is controlled by the resolution of the underlying mesh and by the resolution setting in the **Quality** section in plots. If you need full control over the resolution, use a Parameterized Curve dataset (see Parameterized Curve 2D and Parameterized Curve 3D).

Go to Common Results Node Settings for links to information about the **Data** section.

LINE DATA

Use **Line entry method** to specify the cut line either by **Two points** or by a **Point and direction**.

- If **Two points** is selected, enter **x** and **y** coordinates (2D) or **x**, **y**, and **z** coordinates (3D) in the **Point 1** and **Point 2** fields ((SI unit: m). If **Point and direction** is selected, enter **x** and **y** coordinates (2D) or **x**, **y**, and **z** coordinates (3D) in the **Point** (SI unit: m) and **Direction** fields.
- The **Bounded by points** check box is selected by default to constrain the line between the defined points.
- In 3D, select the **Snap to closest boundary** check box to snap the selected points to the closest boundary in the geometry. Use this option when evaluating a variable that is available on boundaries but not in domains. Otherwise, leave the snapping off (the default setting) to avoid the additional computational cost. However, snapping always happens if the underlying dataset has a shell geometry.

For **Cut Line 2D**, also select the **Additional parallel lines** check box to define multiple lines for plotting or evaluation, for example. Then enter **Distances** from the original line in the field. The **Distances** field refers to a direction that is normal to the cut line and rotated 90 degrees counterclockwise relative to the cut line's direction. For example, if the cut line is from (0, 0) to (1, 0), then the distances are along the vector (0, 1) from any point on the cut line.

ADVANCED

Under **Space variable**, you can change the name of the space variable for the cut line's coordinate from its default value (`cln1x`, for example). The space variable name shows in the **Table** window when displaying the data. For Cut Line 2D nodes, normal variables are also created, and under **Normal variables**, you can change the default names (`cln1nx` and `cln1ny`, for example) in the **nx** and **ny** fields.

For a Cut Line 3D example, see *Thin-Film Resistance*: Application Library path **COMSOL_Multiphysics/Electromagnetics/thin_film_resistance**.

Cut Plane

For plots on cut planes, use **Cut Plane** datasets ( ), which are made on 3D datasets and can be visualized in either 2D or 3D plot groups. All plots and results analysis nodes available in 2D are available for cut plane datasets as well as for surfaces in 3D. The cut plane corresponds to an orthogonal 2D coordinate system embedded in 3D. This dataset is used to create 3D cross-section surface plots.

Go to Common Results Node Settings for links to information about these sections: **Data** and **Plane Data**.

ADVANCED

Under **Space variables**, you can change the name of the space variables **x** and **y** for the cut plane's coordinates from their default values (`cpl1x` and `cpl1y`, for example). These names appear as column titles for the coordinate columns in the **Table** window when displayed in numerical results from a Cut Plane dataset.

Under **Normal variables**, if desired, edit the variable names for the components of the normal vector — **nx**, **ny**, and **nz**. The default names are `cpl1nx`, `cpl1ny`, and `cpl1nz`, respectively.

If you have the:

- AC/DC Module and the Particle Tracing Module, see *Magnetic Lens*: Application Library path **ACDC_Module/Particle_Tracing/magnetic_lens**.
- Batteries & Fuel Cells Module, see *Mass Transport Analysis of a High Temperature PEM Fuel Cell*: Application Library path **Batteries_and_Fuel_Cells_Module/Fuel_Cells/ht_pem**.
- CFD Module, see *Airflow over an Ahmed Body*: Application Library path **CFD_Module/Verification_Examples/ahmed_body**.
- Chemical Reaction Engineering Module, see *Laminar Static Mixer*: Application Library path **Chemical_Reaction_Engineering_Module/Mixing_and_Separation/laminar_static_mixer**.
- Particle Tracing Module, see *Ideal Cloak*: Application Library path **Particle_Tracing_Module/Tutorials/ideal_cloak**.

Cut Point 1D, Cut Point 2D, and Cut Point 3D

Use a **Cut Point 1D** (), **Cut Point 2D** (), or **Cut Point 3D** () dataset to plot and evaluate a value in a certain point along time or along a parametric solution and to create cross-sectional point plots. The choice of 1D, 2D, or 3D only controls the type of input the dataset accepts. For example, a Cut Point 1D can only be added to 1D datasets, Cut Point 2D can only be added to 2D datasets, and so forth. Any of these can be used to make a point graph plot along time and so forth.

Add a **Cut Point 1D** dataset for one point as cross-section data. Add a **Cut Point 2D** or **Cut Point 3D** dataset to, for example, plot the value in a certain point along time or along a parametric solution and use the dataset in its original dimension. Useful ways to visualize and display data in cut points are through **Point Evaluation** nodes ( ) under **Derived Values** and **Point Graph** nodes ( ) under **1D Plot Group** nodes.

Go to Common Results Node Settings for links to information about the **Data** section.

POINT DATA

To specify the point data coordinates using the **Entry method** list:

- Select **Coordinates** (the default) to enter the coordinates. For Cut Point 1D, enter an **x** coordinate; for Cut Point 2D, enter **x** and **y** coordinates; and for Cut Point 3D enter **x**, **y**, and **z** coordinates.
- Select **From file** to enter or browse to a text file with the cut point data. Enter the path and filename in the **Filename** field, or click **Browse** to browse to the file. You can use text files (*.txt) or, if the license includes LiveLink™ for Excel®, Microsoft Excel Workbook files (*.xlsx). The file format is such that each row contains *N* coordinates for an *N*-dimensional cut point. That is, each row contains coordinate values like the following example, for a 3D case:

```
x0 y0 z0 …
x1 y1 z1 …
```

...

For text files, you can use any of the following characters to separate the coordinates: space, comma, semicolon, or a tab character. Empty lines and lines that begin with a percent (%) character are ignored.

- Select **Grid** to enter grid coordinates for gridded data. For Cut Point 1D, enter an **x** coordinate; for Cut Point 2D, enter **x** and **y** coordinates; and for Cut Point 3D, enter **x**, **y**, and **z** coordinates.
- Select **Regular grid** to specify the number of points in each direction. Enter **Number of x points**, **Number of y points** (Cut Point 2D and 3D), and **Number of z points** (Cut Point 3D only). The default value is 10 points in each direction.

Select the **Snap to closest boundary** check box to snap the selected points to the closest boundary in the geometry. Use this option when evaluating a variable that is available on boundaries but not in domains. Otherwise, leave the snapping off (the default setting) to avoid the additional computational cost.

ADVANCED

By default, the Cut Point datasets create a point number variable so that you can refer to that variable in a Point Graph, for example, where you want to plot some quantity at those cut points. The default variable name is typically `cpt1n`, for the first Cut Point dataset. Enter another variable name in the **Point number variable** field if desired.

	For a Cut Point 1D example, and if you have the Plasma Module, see *Benchmark Model of a Capacitively Coupled Plasma*: Application Library path **Plasma_Module/Capacitively_Coupled_Plasmas/ccp_benchmark**.

	For a Cut Point 2D example, see *Steady-State 2D Heat Transfer with Conduction*: Application Library path **COMSOL_Multiphysics/Heat_Transfer/heat_convection_2d**.

	For a Cut Point 3D example, and if you have the: • MEMS Module, see *Prestressed Micromirror*: Application Library path **MEMS_Module/Actuators/micromirror**. • Microfluidics Module, see *Star-Shaped Microchannel*: Application Library path **Microfluidics_Module/Fluid_Flow/star_chip**. • RF Module, see *Microwave Oven*: Application Library path **RF_Module/Microwave_Heating/microwave_oven**.

Edge 2D and Edge 3D

Use an **Edge 2D** ( ) dataset or an **Edge 3D** ( ) dataset to plot and evaluate a value along an edge (boundary) in 2D or an edge in 3D. Create a line graph or any other plot type in a **1D Plot Group** to plot data along an edge using one of these datasets. Use an **Edge 2D** dataset to plot values on boundaries (edges) in a 2D geometry. Use an **Edge 3D** dataset to plot values on edges in a 3D geometry.

	Go to Common Results Node Settings for links to information about these sections: **Data** and **Selection**.

Extrusion 1D and Extrusion 2D

Use an **Extrusion 1D** ( ) dataset or an **Extrusion 2D** ( ) dataset to extrude data in postprocessing from 1D to 2D and from 2D to 3D, respectively. Using these datasets, you can solve a problem more efficiently in a lower dimension and then extrude it for postprocessing, if the geometry is such that a linear extrusion is suitable.

	Go to Common Results Node Settings for links to information about the **Data** section. The dataset can be any dataset with an output dimension equal to the extrusion dataset's dimension

EXTRUSION

Use the **y minimum** and **y maximum** (for **Extrusion 1D** nodes) or **z minimum** and **z maximum** (for **Extrusion 2D** nodes) fields to define the range of the extrusion.

The value in the **Resolution** field is the number of layers added. The default is 10 layers; you must use at least 2.

You define the name of the variable in the extrusion direction in the **y variable** (for **Extrusion 1D** nodes) or **z variable** (for **Extrusion 2D** nodes) field. For the extrusion datasets, you can use the extrusion variable in the expressions that are being evaluated.

	For an Extrusion 2D example, and if you have the Structural Mechanics Module and the Wave Optics Module, see *Stress-Optical Effects with Generalized Plane Strain*: Application Library path **Structural_Mechanics_Module/Stress_Optical_Effects/stress_optical_generalized**.

Filter

Add a **Filter** ( ) node from the **Datasets** menu to create a dataset that filters data from another dataset using a lower or upper bound or both a lower and an upper bound. You also specify the expression that specify what part of the data that you want to filter.

Click the **Plot** button ( ) to visualize the filter dataset in a plot.

DATA

From the **Dataset** list, select a dataset that contains the data that you want to filter.

EXPRESSION

Enter or choose an expression for the quantity for which you want to apply a filter. See Common Results Node Settings for links to more information about the **Expression** section.

FILTER

From the **Bounds** list, choose the bounds for the filtering of the expression: **Lower** (the default), **Upper**, or **Lower and upper**. Depending on the chosen bounds, enter values for the bounds in the **Lower bound** and **Upper bound** fields.

Select a **Geometry level**: **Taken from dataset** (the default), **Volume**, **Surface**, **Line**, or **Point**. The default means the highest geometry dimension for the data in the dataset: typically volumes in 3D, surfaces in 2D, and lines in 1D. Select the **Propagate to lower dimensions** check box to make a geometry level of volumes, for example, also include their adjacent surfaces, lines, and points.

EVALUATION

Select a data **Smoothing** method — **None**, **Inside material domains** (the default, for smoothing within domains shared by the same material but not across material boundaries), **Inside geometry domains** (for smoothing within each geometry domain but not across interior boundaries), **Everywhere**, or **Expression**. If you choose **Expression**, enter an

expression in the **Expression** field such that smoothing occurs where the expression is continuous. The default expression is `dom`, the domain variable, which is equivalent to the **Internal** smoothing. You can also — in a surface plot, for example — use `material.domain`, which is an indicator variable for domains that share the same material (see Material Group Indicator Variables) and is equivalent to the **Inside material domains** setting. For all **Smoothing** methods except **None**, you can also choose smoothing threshold, if needed. From the **Smoothing threshold** list, select **None** (the default), or select **Manual** to enter a relative smoothing threshold value (default: 0.1) in the **Threshold** field. The **Use derivatives** check box controls whether cubic (Hermite) interpolation is used when applying the filter and is selected by default.

Grid 1D, Grid 2D, and Grid 3D

Adding a **Grid 1D** (—), **Grid 2D** ( ), or **Grid 3D** node ( ) from the **More Datasets**, **More 2D Datasets**, or **More 3D Datasets** submenus creates a dataset that can evaluate functions or other datasets on a domain with a grid, including global functions also where there is no domain mesh; for example, you can evaluate BEM and far-field operators. All functions in the same list as the selected function can be evaluated. The domain is an interval for Grid 1D, a rectangle for Grid 2D, and a block for Grid 3D. The domain does not need to have the same dimension as the number of arguments to the function. To plot functions, use a line graph in 1D, for example, by pointing to the Grid 1D dataset in a 1D Plot Group (or similarly for Grid 2D and Grid 3D). Grid datasets always use the spatial frame when evaluating outside the meshed domain.

Click the **Plot** button ( ) to visualize the grid dataset in a plot.

DATA

From the **Source** list, select **Dataset** (the default) to evaluate an expression based on a solution dataset or select **Function** to evaluate a function.

For datasets, select an available solution dataset from the **Dataset** list, or select **None** to not use any dataset. It is only possible to evaluate globally defined expressions and expressions that depend on spatial coordinates. Using the `at`*`i`* operator with the extra argument `'mi'`, you can also access domain variables defined on domains where the grid points are located.

For functions, select the function to create a dataset for from the **Function** list: **None**, **All**, or any of the defined functions in the model. Select **All** to make the Grid dataset point to all functions in the list rather than to a specific function, which can be useful, for example, to plot several functions together in the same plot group.

For functions, there is also a **Refresh** button, that you can click to update the source for functions that read files (Elevation, Image, and Interpolation).

	The plot of the grid data uses the number of points specified in the **Resolution** section below, mixing uniformly distributed points with points taken from the function, including local minima and maxima.

PARAMETER BOUNDS

Available fields are based on the Grid dataset's dimension. Enter a **Name**. The **First parameter**, **Second parameter** (Grid 2D and Grid 3D), and **Third parameter** (Grid 3D only) default names are `x`, `y`, and `z`, respectively. For each parameter, enter a **Minimum** lower bound (the defaults are 0) and a **Maximum** upper bound (the defaults are 1) for the first, second, and third dimension of the domain.

RESOLUTION

Enter a **Resolution**. This is the number of points into which each dimension is discretized. The defaults are `1000` (Function 1D), `100` (Function 2D), and `30` (Function 3D), and the valid range is between 2 and 1,000,000 points.

A high resolution might require significant computational resources. For **Grid 1D** nodes, the **Adaptive** check box is selected by default to enable downsampling of1D datasets by removing unnecessary evaluation points, which can improve graph plots in some cases.

	For an example of a 1D grid dataset and with the AC/DC Module, see *A Geoelectrical Forward Problem*: Application Library path **ACDC_Module/Other_Industrial_Applications/geoelectrics**.

Intersection Point 2D and Intersection Point 3D

Use an **Intersection Point 2D** ( ) or **Intersection Point 3D** ( ) dataset, found under the **More 2D Datasets** and **More 3D Datasets** submenus, to enable evaluation of expressions at the intersection points of particle or ray trajectories and a surface or to evaluate intersection points with a more general surface. You can use the Intersection Point datasets with the following plot nodes and derived value nodes: Particle Trajectories and Ray Trajectories; Particle and Ray (1D plots); Particle Evaluation and Ray Evaluation; Point Trajectories; Histogram; Phase Portrait; Optical Aberration; and Aberration Evaluation.

	Go to Common Results Node Settings for links to information about this section: **Data**. The dataset must point to a Particle or Ray dataset. For information about the **Extra Time Steps** section, see Extra Time Steps for Trajectory Plots and Intersection Point Datasets,

CURVE

This section is only available for Intersection 2D datasets.

From the **Curve type** list, you can specify that the intersection of the particle or ray trajectories with one of the following curves is taken:

- **Line** (the default)
- **Circle**
- **Semicircle**
- **General**

For each of these surface types, additional settings are available.

Line

For **Line** as the curve type, choose one of the following options from the **Line entry method** list:

- If you choose **Two points**, enter the coordinates of the two points that define the line in the **x** and **y** columns for **Point 1** and **Point 2**. If you want the line to be bounded by the points instead of extended beyond both points, select the **Bounded by points** check box (selected by default).
- If you choose **Point and directions**, enter the **x** and **y** coordinates for a point under **Point** and the **x** and **y** components of a direction vector under **Direction**.

If you want to create additional lines that are parallel to the line you defined, select the **Additional parallel lines** check box and enter the distances between each line in the **Distances** field, or click the **Range** button ( ) to define a range of distances.

Circle

For **Circle** as the curve type, you define the circle by entering its center coordinates in the **x** and **y** fields under **Center** and the radius in the **Radius** field.

Semicircle

For **Semicircle** as the curve type, you define the semicircle by entering its center coordinates in the **x** and **y** fields under **Center**, an axis direction in the **x** and **y** fields for the axis vector components under **Axis direction**, and the radius in the **Radius** field. The axis direction defines the extent of the semicircle as the segments of the circle perimeter where the scalar product with the axis direction vector is positive. For example, with the default axis direction (0, 1), the semicircle consists of the circle perimeter where $y > 0$.

General

For defining a general curve, you enter a curve expression $F(\mathbf{r})$. The intersection points will be evaluated on the curve $F(\mathbf{r}) = 0$.

SURFACE

This section is only available for Intersection 3D datasets.

From the **Surface type** list, you can specify that the intersection of the particle or ray trajectories with one of the following surfaces is taken:

- **Plane** (the default)
- **Sphere**
- **Hemisphere**
- **General**

For each of these surface types, additional settings are available.

Plane

For **Plane** as the surface type, choose one of the following options from the **Plane type** list:

- If you choose **General** (the default), see the settings for the available plane entry methods below.
- If you choose **Quick**, you can choose one of **xy-planes**, **yz-planes**, **zx-planes**, **yx-planes**, **zy-planes**, or **xz-planes** from the **Plane** list. Depending on the selected plane's orientation, you can enter the **x-coordinate**, **y-coordinate**, or **z-coordinate** as an offset for the plane (default: 0).

For a **General** plane type, also choose one of the following options from the **Plane entry method** list:

- If you choose **Three points**, enter the coordinates of the three points that define the plane in the **x**, **y**, and **z** columns for **Point 1**, **Point 2**, and **Point 3**.
- If you choose **Point and normal**, enter the **x** and **y** coordinates for a point under **Point** and the **x** and **y** components of a direction vector under **Direction**.

If you want to create additional surfaces (planes) that are parallel to the plane you defined, select the **Additional parallel planes** check box and enter the distances between each plane in the **Distances** field, or click the **Range** button ( ) to define a range of distances.

Sphere

For **Sphere** as the surface type, you define the sphere by entering its center coordinates in the **x**, **y** and **z** fields under **Center** and the radius in the **Radius** field.

Hemisphere

For **Hemisphere** as the surface type, you define the hemisphere by entering its center coordinates in the **x**, **y**, and **z** fields under **Center**, an axis direction in the **x**, **y**, and **z** fields for the axis vector components under **Axis direction**, and the radius in the **Radius** field. The axis direction defines the extent of the hemisphere as the parts of the sphere's surface where the scalar product with the axis direction vector is positive. For example, with the default axis direction (0, 0, 1), the hemisphere consists of the part of a full sphere where $z > 0$.

General

For a general surface, you enter a surface expression $F(\mathbf{r})$. The intersection points will be evaluated on the surface $F(\mathbf{r}) = 0$.

ADVANCED

Under **Space variables** (Intersection Point 3D only), you can change the name of the space variables **x** and **y** for the intersection surface's coordinates from their default values (`ip1x` and `ip1y`, for example).

Under **Normal variables**, enter or edit the variable names for the components of the normal vector — **nx**, **ny**, and **nz** (Intersection 3D) or **nx** and **ny** (Intersection Point 2D). The default names are `ipl1nx`, `ipl1ny`, and `ipl1nz`, respectively.

Select an option from the **Interpolation between time steps** list: **Linear** (the default) or **Cubic**. If the expressions being evaluated at the intersection point are differentiable, the **Cubic** interpolation method will take into account the derivatives of these expressions at the time steps before and after the intersection point is reached. This allows expressions that do not vary linearly over time to be interpolated more accurately.

Intersection 2D and **Intersection 3D** datasets require the Particle Tracing Module or the Ray Optics Module.

Isosurface (Dataset)

Use an **Isosurface** ( ) dataset, found under the **More 3D Datasets** submenu, to visualize isosurfaces in 3D. Isosurfaces cannot be parameterized in general so use this dataset to create arrow surface plots, surface plots, and contour plots. The contour dataset can be applied to the isosurface dataset.

- Go to Common Results Node Settings for links to information about the **Data**, **Expression**, and **Levels** sections.
- Datasets

Join

Use a **Join** ( ) dataset to combine the solutions from two **Solution** datasets. The Join dataset makes it possible to compare solutions from two datasets — for example, to evaluate and visualize the difference between two solutions to the same problem using two different meshes in a mesh convergence study or to create the sum over a parametric sweep that contains a few solutions. The Join dataset has predefined methods to combine the solutions to get the difference, norm of difference, product, quotient, or sum of the two solution datasets. In addition, two predefined "operators", `data1` and `data2`, correspond to the solution data in the first and second Solution dataset, respectively, and make it possible to compare, for example, solutions from different but compatible models or to combine the two solution datasets using a method other than the ones that you can select directly.

You can also use the `withsol` operator in a plot expression, for example, to combine solutions from different solver sequences. See `withsol` for more information.

DATA 1 AND DATA 2

Select a solution dataset as `data1` and another solution dataset as `data2` from the **Data** lists in the **Data 1** and **Data 2** sections, respectively.

Select which solutions to use from the **Solutions** lists:

- Select **All** (the default) to use all solutions in the dataset.
- Select **One** to use one of the available solutions in a time-dependent, parametric, or eigenvalue solution from the list of solutions that appear underneath the **Solutions** list.

The following dataset combinations support the option to include all solutions from both datasets:

- Both datasets point to the same solution.
- Both datasets point to two different stationary solutions.
- Both datasets point to two different time-dependent solutions.

COMBINATION

In the **Method** list, select a method for combining the solution datasets:

- Select **Difference** (the default) to combine the datasets using a difference: `data1-data2`.
- Select **Norm of difference** to combine the datasets as `abs(data1-data2)`, where `data1` and `data2` are the results of evaluating the expression in the two source datasets. For complex-valued data, this corresponds to the Euclidean norm of the difference.
- Select **Explicit** to combine the datasets using an explicit expression with the "operators" `data1` and `data2` in, for example, a plot node's **Expression** field. This can be useful to compare two different dependent variables in two different datasets such as two solutions from two different models using the same geometry. For example, to plot the sum of the variable `u` from the first dataset and the variable `v` from the second dataset, times two, type `2*(data1(u)+data2(v))`. The scope for `data1` is the model to which the solution dataset under **Data 1** belongs, and similarly for `data2`.
- Select **General** to combine the datasets using a general expression in `data1` and `data2` that you type into the **Expression** field. The default, `data1-data2`, is identical to the **Difference** method. This method is useful for combining datasets with similar solution data (from a mesh convergence study, for example) using a method other than a difference, product, quotient, or sum.
- Select **Product** to combine the datasets using a product: `data1*data2`.
- Select **Quotient** to combine the datasets using a quotient: `data1/data2`.
- Select **Sum** to combine the datasets using a sum: `data1+data2`.

	If you choose **Difference**, for example, an operation such as `sin(u)` for the **Join** dataset is equivalent to `sin(data1(u))-sin(data2(u))`. If you want to evaluate or plot `sin(u)` as the operator applied to the difference itself, for example, choose **Explicit** and use `sin(data1(u)-data2(u))` as the expression to evaluate or plot.

	It can happen that the geometries in the two datasets do not match. In such cases, for example, **Join** datasets that contain data from a domain cannot be selected in a point plot. Also, selections are not supported when using **Join** datasets.

Layered Material

Use a **Layered Material** ( ) dataset, found under the **More Datasets** submenu, to create a volume or domain (3D) dataset corresponding to a layered shell physics defined using a surface or boundary (2D) geometry and a built-in

extra dimension (1D) geometry. This dataset is used to plot or evaluate the quantities on a domain level or its lower dimensions.

	The Layered Material dataset requires the Composite Materials Module, AC/DC Module, or Heat Transfer Module. See the documentation for those products for more information about modeling using layered materials.

DATA

Select a **Dataset** that corresponds to a layered shell physics to create a volume or domain dataset. By default, a Layered Material dataset is active on all boundaries. Right-click the dataset and select **Add Selection** in order to restrict the selection and plot or evaluate quantities only on specified selection.

LAYERS

Select an **Evaluate in**: **Mesh nodes** (the default), **Interfaces**, or **Layer midplanes**.

In case **Mesh nodes** is selected, a domain dataset is created and a surface plot using this dataset plots on the exterior boundaries of the layered shell domain. In order to have better visualization inside a layered shell, select the **Separate levels** check box. This setting creates slices on the mesh nodes in the through-thickness direction. Increase the **Refinement** (default: 1) to have more evaluation points in the through-thickness direction.

In case **Interfaces** or **Layer midplanes** is selected, slices are created in the domain either at the interface between the two successive layers or in the middle of each layer, respectively.

Specify **Scale** (default: 1) to increase the thickness of a layered shell keeping the other geometric dimensions unchanged. This is particularly useful to analyze the through-thickness behavior in thin layered shells.

In case **Mesh nodes** or **Layer midplanes** is selected, then under **Layer selection**, choose the layers to include in the dataset.

In case **Interfaces** is selected, then under **Interface selection**, choose the layer interfaces to include in the dataset.

In all cases, use the **Save Layers to File** ( ), **Load Layers to File** ( ), **Set All** ( ), **Clear All** ( ), **Copy Selection** ( ), and **Paste Selection** ( ) buttons as desired for making the desired selection of layers or layer interfaces.

Maximum and Minimum

Select the **Maximum** evaluation (MAX) or **Minimum** evaluation (MIN) dataset, found under the **More Datasets** submenu, to create a dataset that computes the maximum or minimum of another dataset.

DATA

Select a **Dataset** for the data to compute the maximum or minimum. To compute the maximum or minimum for a **Solution** dataset, use a **Selection** to define the geometric entity (point, boundary, edge, or domain) to integrate over. Right-click the dataset and select **Add Selection**.

SETTINGS

Select a **Geometry level**: **Taken from dataset** (the default), **Volume**, **Surface**, **Line**, or **Point**. The default means the highest geometry dimension for the data in the dataset: typically volumes in 3D, surfaces in 2D, and lines in 1D.

Select the evaluation point type from the **Point type** list:

- **Lagrange points** (the default) to evaluate the maximum or minimum value in the Lagrange points. Select a **Lagrange order** (default: 5; the Lagrange order is the number of partitions of an element edge) to adjust the accuracy of the minimum or maximum values.

- **Node points** (the default) to evaluate the maximum or minimum value in the node points of the extended mesh.
- **Integration points** to evaluate the maximum or minimum value in the integration points. Select an **Integration order** (default: 4) to adjust the accuracy of the minimum or maximum values.

Mesh (Dataset)

Add a **Mesh** ( ) dataset to make a mesh available for visualization and results analysis, typically for mesh-related quantities such as the mesh element quality, which is possible to plot using a mesh dataset without computing a solution. Use a **Mesh** node in a plot group to get a plot of the actual mesh.

MESH

Select the **Mesh** to use as the data from the list. The list includes meshes in the model, including possible meshes created for extra dimensions by the physics interfaces (listed as **Derived Mesh**, for example).

Mirror 2D and Mirror 3D

Use a **Mirror 2D** ( ) dataset to extend a solution defined on one side of an axis to the other side of the axis. This can be useful for visualization of a solution to an axisymmetric problem. Use a **Mirror 3D** ( ) dataset to extend a solution defined on one side of a plane to the other side of a plane. They are selected from the **More 2D Datasets** and **More 3D Datasets** submenus.

	Go to Common Results Node Settings for links to information about these sections: **Data**, **Axis Data** (Mirror 2D), and **Plane Data** (Mirror 3D).

	Generally, operations on vector quantities using the mirror dataset work if you use the Mirror dataset directly from the plot but do not work if you use it indirectly with another dataset in between. For example, use a mirror of a cut dataset operation order rather than a cut of a mirror.

ADVANCED

Select the **Define variables** check box to create a **Positive side indicator** variable. The default, `mir1side`, is 1 in the original domain and 0 in the mirror. Use the **Positive side indicator** variable in the **Expression** section of a plot **Settings** window to exclude quantities from the mirror side. Under **Space variables**, enter or edit the variable names for the mirrored coordinate system. Enter or edit the **x**, **y**, and **z** (Mirror 3D only) variable names in the respective fields. The default names are `mir1x`, `mir1y`, and mir1z, respectively.

From the **Vector transformation** list, choose **Symmetric** (the default) or **Antisymmetric**. The symmetric transformation negates the vector component orthogonal to the symmetry axis or plane. The antisymmetric transform negates the vector components parallel to the symmetry axis or plane. The latter option can be useful for visualizing models with odd symmetry.

If desired, select the **Remove elements on the symmetry plane** check box to not include and elements that lie on the symmetry plane.

	• For a Mirror 3D example, and with the Chemical Reaction Engineering Module, see *Thermal Stresses in a Monolithic Reactor*: Application Library path **Chemical_Reaction_Engineering_Module/Reactors_with_Porous_Catalysts/monolith_thermal_stress**. • For a Mirror 2D example, and with the Plasma Module, see *DC Glow Discharge*: Application Library path **Plasma_Module/Direct_Current_Discharges/positive_column_2d**.

Parameterized Curve 2D and Parameterized Curve 3D

Use a **Parameterized Curve 2D** ( ) or **Parameterized Curve 3D** ( ) dataset to visualize data along a general parameterized curve. Visualize the parameterized curve as a line plot in its original space dimension (2D or 3D) and as a line graph plot in 1D. Parameterized Curve datasets always use the spatial frame when evaluating outside the meshed domain. Select these options from the **More 2D Datasets** and **More 3D Datasets** submenus.

	Go to Common Results Node Settings for links to information about the **Data** section.

PARAMETER

Enter a **Name** and the **Minimum** and **Maximum** range of the parameter curve. You can use numbers, parameters, and solution-dependent expressions for the range limits.

EXPRESSIONS

Enter functions for the coordinates of the parameter. For Parameterized Curve 2D, enter values in the **x** and **y** fields. For Parameterized Curve 3D, enter values in the **x**, **y**, and **z** fields.

	If the expressions contain any global parameters, you must do an update of the current solution or re-solve the model before using the dataset.

If you want to evaluate an expression defined globally where there is also no domain mesh, select the **Only evaluate globally defined expressions** check box. It is then possible to, for example, postprocess a BEM model without a domain mesh inside the domain. The expressions that you can evaluate with this setting can be functions of the space variables and the domain variable `dom`.

In 3D, select the **Snap to closest boundary** check box to snap the selected points to the closest boundary in the geometry. Use this option when evaluating a variable that is available on boundaries but not in domains. Otherwise, leave the snapping off (the default setting) to avoid the additional computational cost. However, snapping always happens if the underlying dataset has a shell geometry.

RESOLUTION

Enter the number of subdivisions of the parameter range. The default **Resolution** is 1000, and the valid range is between 2 and 1,000,000 subdivisions. A high resolution might require significant computational resources.

	For a Parameterized Curve 3D example, and with the Heat Transfer Module, see *Radiative Heat Transfer in Finite Cylindrical Media*: Application Library path **Heat_Transfer_Module/Verification_Examples/cylinder_participating_media**.*Results Analysis and Plots*

Parameterized Surface

Use a **Parameterized Surface** ( ) dataset, selected from the **More 3D Datasets** submenu, to visualize data on a general parameterized surface. Parameterized Surface datasets always use the spatial frame when evaluating outside

the meshed domain. You can visualize the parameterized surface as a surface plot in its original dimension and as any plot type in 2D.

	Go to Common Results Node Settings for links to information about the **Data** section.

PARAMETERS

Enter a **Name** and a range of the parameter in the **Minimum** and **Maximum** fields for both the **First parameter** and **Second parameter** fields. You can use numbers, parameters, and solution-dependent expressions for the range limits.

EXPRESSIONS

Enter functions for coordinates of the two parameters in the **x**, **y**, and **z** fields.

	If the expressions contain any global parameters, you must do an update of the current solution or re-solve the model before using the dataset.

If you want to evaluate an expression defined globally where there is also no domain mesh, select the **Only evaluate globally defined expressions** check box. It is then possible to, for example, postprocess a BEM model without a domain mesh inside the domain. The expressions that you can evaluate with this setting can be functions of the space variables and the domain variable `dom`.

RESOLUTION

Enter the number of subdivisions of the parameter ranges. The default **Resolution** is 200, and the valid range is between 2 and 1,000,000 subdivisions. A high resolution might require significant computational resources.

Parametric Extrusion 1D and Parametric Extrusion 2D

Use a **Parametric Extrusion 1D** ( ) or **Parametric Extrusion 2D** ( ) dataset to extend another dataset by using a parameter, such as time, as a dimension. Select these from the **More Datasets** and **More 2D Datasets** submenus.

SETTINGS

From the **Level transformation** list, select **None** (the default) to use no transformation of the extrusion level, or select **Expression** to enter an expression in the **Transformation expression** field. The default expression is `level`, which is a predefined variable for the extrusion level (that is, no transformation). You can instead use an expression that is a function of `level`, such as `log10(level)` for a logarithmic transformation to create a directivity plot, for example.

Select the **Level scale factor** check box to edit the field. The default factor value is 1. The level scale factor applies to the transformed levels. The **Separate levels** check box is selected by default.

	Go to Common Results Node Settings for links to information about the **Data** section.

	For a 1D Parametric Extrusion example, see *The KdV Equation and Solitons*: Application Library path **COMSOL_Multiphysics/Equation_Based/kdv_equation**.

Particle (Dataset)

Use a **Particle** ( ) dataset, selected from the **More Datasets** submenu, to visualize particle traces computed by a Particle Tracing Module interface. The Particle dataset is automatically created when solving a model containing one of the Particle Tracing Module interfaces if the **Generate default plots** option is selected in the **Study**. Selections can be added to the particle dataset, which makes it possible to compute, for example, the number or fraction of particles in a given domain or on a given boundary during results processing. You can visualize the particles using a plot of the particle trajectories in the original dimension, as a Poincaré map, or as a 2D phase portrait.

PARTICLE SOLUTION

Select a **Solution** from the list of solution data. Select a **Particle geometry specification**: **Manual** (the default) or **From physics interface**. If any particle trajectories have been solved for, then instead **From physics interface** is the default and an applicable particle tracing physics interface is selected from the **Physics interface** list (see below).

If **Manual** is selected, the **Particle geometry** and **Position-dependent variables** text fields become available. In the **Particle geometry** field, enter the name of the variable for the particle geometry. This corresponds to the hidden geometry on which the particle degrees of freedom are computed. When the Particle dataset is generated from the default plots, the correct name for the particle geometry is filled in automatically. The particle geometry takes the name `pgeom_<id>`, where `<id>` is the Name for the specific Particle Tracing interface node.

In the **Position-dependent variables** field, enter the names of the dependent variables for the particles' position using commas to separate the variables. Like the particle geometry, the names of the particle degrees of freedom are filled in automatically when the particle dataset is generated from the default plots. The names correspond to the particle position degrees of freedom with the component name prepended. For example, for a 3D component, with name `comp1` and dependent variables `qx`, `qy`, and `qz` for the physics interface, the correct expression to enter is `comp1.qx`, `comp1.qy`, and `comp1.qz`.

If **From physics interface** is selected, select the **Physics interface** from which the particle geometry and the names of the particle position degrees of freedom are defined. Only physics interfaces that can create a valid particle geometry are shown.

	Particle datasets require the Particle Tracing Module.

	If you have the AC/DC Module and the Particle Tracing Module, see *Magnetic Lens*: Application Library path **ACDC_Module/Particle_Tracing/magnetic_lens**.

Particle Bin

Use a **Particle Bin** ( ) dataset, selected from the **More Datasets** submenu, to organize particles into groups and treating each group as a single entity for the purpose of using other particle postprocessing features. This dataset always takes a Particle (Dataset) as input.

EXPRESSION

See Expressions and Predefined Quantities for information about the settings for defining an expression to be evaluated. The value of this expression is used as a criterion for organizing particles into bins. The options in the **Bins** section below determine how the value of this expression is organized into subintervals.

Then, if this dataset is used in place of a Particle (Dataset) in any other Results feature, all particles in each bin are replaced by a single macroparticle having position and other properties that are the average over all particles in the bin.

BINS

Choose one of the following from the **Entry method** list: **Limits**, **Number of bins** (the default), or **Tolerance**.

- For **Limits**, enter a list of values directly, or use the **Range** button ( ). All particles whose expressions evaluate to a number between the same limits, are put into the same bin.
- For **Number of bins**, enter the **Number of bins**. The default is 10. Then select one of the following from the **Distribution** list: **Equal number of particles** or **Equal bin width**. The limits for each bin are computed so that they lie between the largest and smallest values of the expression over all particles.
- For **Tolerance** enter the **Tolerance**. Particles are typically placed in the same bin if the difference between their expression values is less than the tolerance. This is a convenient option when the value of the expression should take on any of a large number of discrete values, since you can simply specify a small tolerance and then a single bin is created for each discrete value.

Particle Bin datasets require the Particle Tracing Module.

Ray (Dataset)

Use a **Ray** dataset ( ), selected from the **More Datasets** submenu, to visualize ray traces computed by a Geometrical Optics or Ray Acoustics interface. The Ray dataset is automatically created when solving a model containing one of the interfaces if the **Generate default plots** option is selected in the **Study**. Selections can be added to the Ray dataset, which makes it possible to compute, for example, the number or fraction of rays in a given domain or on a given boundary during results processing.

RAY SOLUTION

Select a **Solution** from the list of solution data. Select a **Ray geometry specification**: **Manual** (the default) or **From physics interface**. If any ray trajectories have been solved for, then instead **From physics interface** is the default and an applicable Geometrical Optics or Ray Acoustics physics interface is selected from the **Physics interface** list (see below).

If **Manual** is selected, the **Ray geometry** and **Position-dependent variables** text fields become available. In the **Ray geometry** field, enter the name of the variable for the ray geometry. This corresponds to the hidden geometry on which the ray degrees of freedom are computed. When the Ray dataset is generated from the default plots the correct name for the ray geometry is filled in automatically. The ray geometry takes the name `pgeom_<id>`, where `<id>` is the Name for the specific physics interface node.

In the **Position-dependent variables** field, enter the names of the dependent variables for the rays' position using commas to separate the variables. Like the ray geometry, the names of the ray degrees of freedom are filled in automatically when the Ray dataset is generated from the default plots. The names correspond to the ray position degrees of freedom with the component name prepended. For example, for a 3D component, with name `<comp1>`, and **Dependent Variables** `qx`, `qy`, and `qz` for the physics interface, the correct expression to enter is `comp1.qx`, `comp1.qy`, and `comp1.qz`.

If **From physics interface** is selected, select the **Physics interface** from which the ray geometry and the names of the ray position degrees of freedom are defined. Only physics interfaces that can create a valid ray geometry are shown.

Ray datasets require the Ray Optics Module or Acoustics Module.

Ray Bin

Use a **Ray Bin** ( ) dataset, selected from the **More Datasets** submenu, to organize rays into groups and treating each group as a single entity for the purpose of using other ray tracing features. This dataset always takes a Ray (Dataset) as input.

EXPRESSION

See Expressions and Predefined Quantities for information about the settings for defining an expression to be evaluated. The value of this expression is used as a criterion for organizing rays into bins. The options in the **Bins** section below determine how the value of this expression is organized into subintervals.

Then, if this dataset is used in place of a Ray (Dataset) in any other Results feature, all rays in each bin are replaced by a single ray having position and other properties that are the average over all rays in the bin.

BINS

Choose one of the following from the **Entry method** list: **Limits**, **Number of bins** (the default), or **Tolerance**.

- For **Limits**, enter a list of values directly, or use the **Range** button ( ). All rays whose expressions evaluate to a number between the same limits, are put into the same bin.
- For **Number of bins**, enter the **Number of bins**. The default is 10. Then select one of the following from the **Distribution** list: **Equal number of particles** or **Equal bin width**. The limits for each bin are computed so that they lie between the largest and smallest values of the expression over all rays.
- For **Tolerance** enter the **Tolerance**. Rays are typically placed in the same bin if the difference between their expression values is less than the tolerance. This is a convenient option when the value of the expression should take on any of a large number of discrete values, since you can simply specify a small tolerance and then a single bin is created for each discrete value.

Ray Bin datasets require the Ray Optics Module or Acoustics Module.

Receiver 2D and Receiver 3D

Use a **Receiver 2D** ( ) or **Receiver 3D** dataset ( ), selected from the **More 2D Datasets** submenu and the **More 3D Datasets** submenu, respectively, to collect the data necessary to visualize the impulse response for a Ray Acoustics simulation (of room acoustics, for example), using an **Impulse Response** plot node in a 1D plot group. The **Impulse Response** node uses the data from a **Receiver** dataset as input.

See Common Results Node Settings for links to information about the **Data** section.

RECEIVER

The receiver is specified as a sphere with a radius, located at a center position (the microphone needs to have a certain finite size such that there is a reasonable probability of rays interacting with it).

Under **Center**, specify the **x**, **y**, and (3D only) **z** coordinates for the center of the receiver.

Under **Radius**, specify the radius of the receiver. From the **Radius input** list, choose **Expression** to determine the radius using an expression (see below) or choose **User defined** to enter a value for the radius in the **Radius** field (SI unit: m).

The following expression determines the radius R of the receiver in room acoustics applications:

$$R = \log_{10}(V) d_{\mathrm{SR}} \sqrt{\frac{4}{N}}$$

where you enter the values for the **Number of rays**, N; **Room volume**, V (SI unit: m^2); and **Source-receiver distance**, d_{SR} (SI unit: m), to determine the radius.

DIRECTIVITY

From the **Directivity type** list, choose **Omnidirectional** (the default) or **User defined** to enter a directivity expression in the **Expression** field (unit: dB). Click the **Replace Expression** ( ) button to choose an expression from available predefined expressions.

EXTRA TIME STEPS

An impulse response plot requires small time steps. You can control the added extra time steps from the **Maximum number of extra time steps rendered** list:

- Choose **Specified number of times** (the default) to enter a maximum number of steps in the **Maximum number of extra time steps** field (default: 100).
- Choose **Proportional to the number of solution times** to enter a factor in the **Proportionality factor** field. The proportionality factor is a positive integer.
- Choose **None** to not add any extra time steps.

ADVANCED

From the **Interpolation between time steps** list, you can choose to use a **Linear** interpolation (the default) or a **Cubic** interpolation, which can be more exact but requires a larger computational effort.

Under **Normal variables** and **Other variables**, if desired, you can change the default names of the created variables for the normal directions (**nx**, **ny**, and, in 3D, **nz**) and for the **Distance traveled** by a ray inside the receiver, the **Volume** of the receiver, the **Directivity**, and the **First ray arrival time**.

Receiver datasets require the Acoustics Module.

Response Spectrum 2D and Response Spectrum 3D

Use a **Response Spectrum 2D** ( ) or **Response Spectrum 3D** ( ) dataset selected from the **More 2D Datasets** and **More 3D Datasets** submenus, respectively, to perform a response spectrum analysis for a structural mechanics model. A response spectrum analysis is a modal-based method for estimating the structural response to a transient, nondeterministic event. Typical applications are dimensioning against earthquakes and shocks.

DATA

The input to a response spectrum is the results from an eigenfrequency computation, which you choose as one of the existing solution datasets from an eigenfrequency study, available in the **Eigenfrequency dataset** list.

When you have selected a value other than **None** from the **Mass correction** list, you also need to include a number of stationary load cases. In those cases, also choose an applicable solution from the **Missing mass load cases dataset** list. Computing the stationary load cases used here requires a special technique, as described in Performing a Response Spectrum Analysis in the *Structural Mechanics Module User's Guide*.

SPECTRA

In this section you specify the spectra used as loading for the response spectrum evaluation ("design response spectra"). The spectra must be defined as functions under either the **Global** node or under **Definitions** in a

component. Spectra are commonly provided as functions of either natural frequency or period time. This is just an inversion of the abscissa, but you have the option to use either form.

From the **Spectrum type** list, choose a type for the spectrum: **Pseudoacceleration spectrum** (the default), **Displacement spectrum**, or **Pseudovelocity spectrum**.

From the **Depends on** list, choose **Frequency** (the default) or **Period time** to specify what the spectrum depends on.

!	The functions you reference for the spectra are taken as entered, without any unit conversions. Thus, it is not meaningful to modify the unit fields available in the settings for many types of functions. The argument to the function is always either seconds or Hertz, depending on the choice in the **Depends on** list.

In a **Response Spectrum 2D** node, also specify the following settings:

- From the **Horizontal spectrum** list, choose any available user-defined function that represents the horizontal response spectrum.
- From the **Vertical spectrum** list, choose any available user-defined function that represents the vertical response spectrum.

In a **Response Spectrum 3D** node, also specify the following settings:

- From the **Primary horizontal spectrum** list, choose any available user-defined function that represents the primary horizontal spectrum. As a default, the primary spectrum acts along the global *X*-axis.
- From the **Secondary horizontal spectrum** list, choose any available user-defined function that represents the secondary horizontal spectrum. The secondary horizontal spectrum acts in a direction orthogonal to the primary horizontal spectrum. This option is only available when the **Spatial combination** method is **SRSS** or **Percent method**.
- In the **Primary axis rotation** field, enter a primary axis rotation (in degrees). This is the counterclockwise rotation in the *XY*-plane from the *X*-axis to the direction in which the primary horizontal spectrum acts. The allowed range is 0–90 degrees. This option is only available when the **Spatial combination** method is **SRSS** or **Percent method**.
- From the **Vertical spectrum** list, choose any available user-defined function that represents the vertical spectrum.

COMBINATION

The combination of the modes in the response spectrum method is in general done in two passes. First, all modes are combined into a response for each spatial direction of excitation, and then the result for the two or three directions are combined into a final result. There are, however, also evaluation methods where the total result is computed directly.

From the **Spatial combination** list, choose one of the following combination methods:

- The **SRSS** method (the default). This combination method uses the square root of the sum of the squares.
- The **Percent method**. In this method, the contribution from the worst direction is taken at full value, whereas the two (in 2D: one) other contributions are reduced. There are two variants in commonly in use, the 40% (100-40-40) method and the 30% (100-30-30) method. You enter the percentage for the reduced contributions in the **Weight factor for smaller response** field (default: `40[%]`).
- The **CQC3** method (for **Response Spectrum 3D** datasets only). The CQC3 method extends the CQC (complete quadratic combination) principles to the spatial combination. In the CQC3 method, the modal and spatial combination are performed simultaneously. When you have selected this method, enter a **Secondary horizontal spectrum scale factor** (default: 0.5). In this method, the secondary horizontal spectrum is taken to differ from

the primary horizontal spectrum only by this constant scalar factor. Also, select the **Augment with rigid response** check box to include the rigid response if desired.

- The **SRSS3** method (for **Response Spectrum 3D** datasets only). The SRSS3 method is a special case of the CQC3 rule, in which the mode correlation is ignored. This method has the same additional settings as the CQC3 method.

For the **SRSS** and **Percent method** options, you need to decide on a method for the modal combination. From the **Mode combination** list, choose a method for combining the modes:

- The **CQC (Der Kiureghian)** method uses CQC (complete quadratic combination) with a Der Kiureghian correlation coefficient determining the degree of interaction between the modes. The coefficient depends on the damping and spacing between the frequencies.
- The **Absolute value sum** method uses the sum of absolute values of the modes. This is a highly conservative method since it assumes that all modes reach their peak values at the same time.
- The **SRSS** (square root of sum of squares) method does not include any interaction between the modes and is applicable only when the eigenfrequencies for the used modes are well spaced.
- The **Double sum (Rosenblueth)** method uses a double sum with a Rosenblueth correlation coefficient. This method resembles the CQC method in that the coupling between the modes depends on the damping and eigenfrequency spacing, but it also takes the duration of the event into account.
- The **Grouping method** uses a scheme where grouping of modes are created based on the proximity eigenfrequencies. Within each group, the modes are assumed to interact completely, while there is no interaction between modes in different groups.
- The **Ten percent method** assumes that modes interact if their natural frequencies differ by less than 10%.

Depending on the method that you have selected from the **Mode combination** list, the following additional settings are available:

Enter a **Damping ratio** (as a value between 0 and 1; the default is 0.05) for the CQC3, CQC (Der Kiureghian) and Double sum (Rosenblueth) methods. For the latter, also enter a time of duration (in seconds) in the **Time of duration** field (default: 0).

Select the **Use absolute value for coupling terms** check box to use a more conservative assumption that the combination of two modes always gives a positive contributions to the total response. Without this assumption, the signs of the modal contributions are respected. This setting is available for **CQC (Der Kiureghian)**, **Grouping method**, and **Ten percent method**. For the **Double sum (Rosenblueth)** method, you can select the corresponding **Use absolute value for coupling terms (NRC RG 1.92 Rev. 1)** check box. Later versions of NRC RG 1.92 state that the sign of the contribution should be respected, so this option is available only for compatibility with the first version of this regulatory guide.

	Respecting the sign of the coupling contributions is strictly speaking correct only when the result quantity is a linear function of the eigenmodes. This includes components of displacement, velocity, and acceleration vectors, as well as components of stress and strain tensors. Nonlinear quantities like total displacement and equivalent stress measures are always positive irrespective of the sign of the underlying mode shapes, so for such quantities you should consider selecting the **Use absolute value for coupling terms** check box in order to ensure a conservative result.

For all mode combination methods, the following settings are available:

From the **Rigid modes** list, choose **None** (the default), **Gupta**, or **Lindley-Yow**. Some standards require a classification of the modes based on the natural frequency, where modes of with higher frequencies ("rigid modes") are assumed to have a higher degree of correlation to each other. For the two methods that address this, Gupta and Lindley-Yow, additional settings are available:

Specify a **Frequency limit for pure periodic modes** (SI unit: 1/s). The default is 0. This is the frequency below which the modes are assumed to be fully periodic, and thus have the least degree of correlation. For the Lindley-Yow method, modes can be fully periodic even at higher frequencies, since there is an additional requirement stating that the acceleration spectrum must be monotonically decreasing before modes are considered to have a rigid part.

Specify a **Frequency limit for pure rigid modes** (SI unit: 1/s). The default is 0. For the Gupta method only. This is the frequency above which the modes are assumed to follow the base support acceleration as a rigid body, even if there can be some amplification.

Specify a **Zero period acceleration frequency** (SI unit: 1/s). The default is 0. This is the frequency above which there is no periodic response, and the acceleration is equal to the of the excitation. For the Gupta method, this value is ignored, unless you also select to use the missing mass method.

In general, a mode superposition using a limited number of modes will miss some mass. With the assumption that the higher-order modes do not have any dynamic amplification, it is possible to device a correction by solving some extra static load cases, containing the acceleration excitation acting on the "lost mass".

From the **Mass correction** list, choose one of the following options:

- **None** (the default).
- **Missing mass method**. In this model, the missing mass is computed from the eigenmodes as a distributed field over the structure, which can be seen as mass density distribution. This mass density is then used in stationary analysis to compute the extra displacements at a certain frequency. When you select this option, you must also select a stationary study in the **Missing mass load cases dataset** list.
- **Static ZPS method** (for Lindley-Yow only). In this method, there is no need to actually deduce the true missing mass. According to the Lindley-Yow method, all rigid modes have the acceleration at the zero period acceleration frequency, S_{ZPA}. This acceleration is given to the whole structure. The static load cases are thus just pure gravity loads but scaled by S_{ZPA} instead of the acceleration of gravity. When you select this option, you must also select a stationary study in the **Missing mass load cases dataset** list.

	Response Spectrum 2D and **Response Spectrum 3D** datasets require the Structural Mechanics Module.

	• For information about how to set up studies for response spectrum analysis, see Performing a Response Spectrum Analysis in the *Structural Mechanics Module User's Guide*. • The expressions used for the various evaluation options is described in Response Spectrum Analysis Theory in the *Structural Mechanics Module User's Guide*.

Revolution 1D and Revolution 2D

Use a **Revolution 1D** dataset to visualize a 1D axisymmetric ( ) solution in 2D. All plot types in 3D or 2D are available for visualization through the revolution dataset. Use a **Revolution 2D** dataset to visualize a 2D ( ) solution in 3D. All plot types in 3D or 2D are available for visualization through the revolution dataset.

See Common Results Node Settings for links to information about the **Data** and **Axis Data** sections.

REVOLUTION LAYERS

From the **Number of layers** list, choose **Normal** (the default), **Fine**, **Coarse**, or **Custom**. The predefined settings adapt the number of layers to the chosen revolution angle, which minimizes the time to plot the revolved geometry for revolution angles that are less than 360 degrees. If **Custom** is selected, enter the number of **Layers** about the revolution axis (default value: 50).

For all choices, enter the **Start angle** (SI unit: deg) for the revolved model. The default is 0 degrees. Enter the **Revolution angle** (SI unit: deg) to revolve the model to see into the geometry in degrees. The default is 360 degrees, that is, a full revolution. Enter negative values to revolve the model in the opposite direction. An axisymmetric geometry in the *rz*-plane is projected to the *xy*-plane and then rotated about the *y*-axis or to the *xz*-plane and then rotated about the *z*-axis using the start angle and revolution angle.

By default, a revolution that is not a full 360 degrees uses end caps to close the revolved geometry. Clear the **Add end caps if the revolution is not full** check box to leave the geometry open, without end caps.

ADVANCED

For **Revolution 2D**, from the **Map plane to** list, select a plane to map the axisymmetric solution to — **xy-plane** (the default) to map the *rz*-plane to the *xy*-plane and then rotate it about the *y*-axis, or select **xz-plane** to map the *rz*-plane to the *xz*-plane and then rotate it about the *z*-axis.

For **Revolution 1D** and **Revolution 2D**, select the **Define variables** check box to create variable names for the space and angle variables in the revolved geometry. Then under **Space variables**, enter or edit the variable names for the revolved coordinate system. Enter or edit the **x**, **y**, and **z** (Revolution 2D only) variable names in the respective fields. The default names are `rev1x`, `rev1y`, and `rev1z`, respectively.

Under **phi**, enter or edit the variable name for **phi**. Phi is the name of the angle variable in the revolved coordinate system. The default name is `rev1phi`.

For example, the angle variables can be useful to enter Cartesian components of axisymmetric vector fields (such as `ht.tfluxr*cos(rev1phi)` for the *x*-component of a heat flux from a 2D axisymmetric heat transfer model, where `ht.tfluxr` is the radial component of the total heat flux).

For **Revolution 2D**, you can also enter the **Azimuthal mode number** as an integer. The default is 0. You can also use a mode number that is defined as a parameter or a variable.

Use the azimuthal mode number to control the source dataset and evaluate it with different phases.

Sector 2D and Sector 3D

Use the **Sector 2D** ( ) and **Sector 3D** ( ) datasets, selected from the **More 2D Datasets** and **More 3D Datasets** submenus, to make it possible to plot the solution for the full geometry while reducing computation time and memory requirements for complex geometries by exploiting sector symmetries. The geometry must be of a type

that can be transformed through the use of rotation or reflection (mirroring). Rotation and reflection are only available when using an even number of sectors. It is also possible to invert the phase (change the sign) when rotating or reflecting.

For example, suppose that there are N sectors in a geometry. A Sector dataset first evaluates the input expressions in the source dataset, creates N copies (one for each sector of the geometry), maps and interpolates the data, and transforms the expression components that correspond to vector fields.

Go to Common Results Node Settings for links to information about these sections: **Data** and **Axis Data**.

SYMMETRY

In the **Number of sectors** field, enter any integer greater than or equal to 2 (the default is 2) to define the number of sectors in the full geometry. From the **Sectors to include** list, choose **All** (the default) to use all specified sectors evenly distributed. If you want to use fewer sectors than what you specified in the **Number of sectors** field, choose a range of sectors using the **Start sector** field (default: 0, for the first sector) and the **Number of sectors to include** field (default: the number of sectors, so that you get the same plot as if using **All**). You can use these settings to only plot a fraction of the sectors in order to see the solution inside of the resulting geometry.

When the **Number of sectors** entered is an even number, select a **Transformation**: **Rotation** (the default) or **Rotation and reflection**. For an uneven number of sectors, only rotation is available and it requires no additional user input.

If **Rotation and reflection** is selected:

- For **Sector 2D**, enter **x** and **y** coordinates for the **Direction of reflection axis**.
- For **Sector 3D**, enter **x**, **y**, and **z** coordinates for the **Radial direction of reflection plane**.

ADVANCED

Select the **Define variables** check box to create variables for the **Sector number** and the **Space variables**:

- The **Sector number** is an integer number from 0 to the number of sectors minus 1. Each sector has a unique sector number: 0, 1, 2, and 3 for a sector dataset that includes four sectors, for example. The default variable for the sector number is `sec1number`, where `sec1` is the dataset node's tag.
- The **Space variables** evaluate to the coordinate after the transformation (as opposed to x, y, and z, which evaluate to the coordinates in the underlying dataset). The default variable names (the number of which are based on space dimension) are `sec1x` for the x coordinate, `sec1y` for the y coordinate, and `sec1z` for the z coordinate.

When the **Define variables** check box is selected, the input expression is enabled once for each sector, something that increases evaluation time by roughly a factor of the number of sectors (N). If the input expression being evaluated contains any of the space variables, then this evaluated mode is enabled automatically.

Azimuthal Mode Number

When the **Number of sectors** is odd or **Rotation** is selected as the **Transformation** (cyclic symmetry), also enter the **Azimuthal mode number** as an integer. The default is 0. You can also use a mode number that is defined as a parameter or a variable.

Use the azimuthal mode number to control the source dataset and evaluate it with different phases for the different sectors. If the mode number is k, then the phase shifts with $-2\pi ik/N$ for sector i.

Invert Phase When Rotating and Invert Phase When Reflecting

These check boxes are available in various combinations as follows:

- When **Rotation** is selected as the **Transformation** and the **Number of sectors** is a multiple of 2 (an even number), select the **Invert phase when rotating** check box to make the phase of the solution change between consecutive sectors.
- When **Rotation and Reflection** is selected as the **Transformation** and the **Number of sectors** is a multiple of 2 (an even number), select the **Invert phase when reflecting** check box to make the phase change between consecutive sectors. When the **Number of sector**s is a multiple of 4, select the **Invert phase when rotating** check box to make the phase change between consecutive sectors.

Shell

Use the **Shell** ( ) dataset is available in 3D and 2D axisymmetry, under the **More 3D Datasets** submenu, to simultaneously visualize the top and bottom surfaces of a shell using, for example, surface and arrow plots. The main purpose is to give a representation which matches the physical thickness of a shell. The results displayed on the two sides will be different as long as the selected quantity has an explicit dependence on the thickness.

DATA

Select the Solution dataset to use for the shell postprocessing from the **Dataset** list. Only 3D and 2D axisymmetric Solution datasets that contain one or more surfaces are available.

LAYERS

In this section you specify the parameters for the top and bottom surfaces.

Top Parameters

Under **Top parameters**, enter the following parameters that control the evaluation of the top surface:

- The local z-coordinate, in the range $[-1, 1]$, for thickness-dependent results. Usually the value should be set to 1.
- The components of the reference point for moment computations.

Bottom Parameters

Under Bottom parameters, enter the parameters that control the evaluation of the bottom surface (similar to those for the top surface). The local z-coordinate should usually have the value -1.

POSITION

Under **Orientation**, enter the **X component**, **Y component**, and **Z component** for the components of the displacement direction vector, such as the global normal vector components `nx`, `ny`, and `nz` or the shell normal components, such as `shell.nlX`, `shell.nlY`, and `shell.nlZ`. This is the direction in which she displayed boundary is offset from the meshed boundary.

Under **Distance**, enter a value for the displacement magnitude in the **Distance** field. For example, `shell.z_offset+0.5*shell.z*shell.d`, which is an offset, if using, plus half the shell thickness. The local z-coordinates, as given in the **Layers** section, are inserted in the distance expression in order to position the top and bottoms surfaces. The surface is offset in the direction given under **Orientation**. By using distance values larger that the actually shell thickness, it is possible to enhance the result presentation for very thin shells.

Shell datasets require the Structural Mechanics Module.

Solution

The **Solution** ( ) datasets make solutions available for visualization and results analysis. Solvers automatically create **Solution** datasets. By default, the name of the Solution dataset nodes include the name of the study with the solution that the dataset refers to (for example, **Study 2/Solution**), but you can rename them if you want to. Right-click to select **Remesh Deformed Configuration** if the model contains mesh deformation.

Solution datasets do not contain the solution but refer to a solution stored in a solver node.

SOLUTION

- Select a **Solution** to make available for visualization and results analysis.
- If there is more than one Component, select the geometry to perform visualization and results analysis for by selecting the corresponding **Component** from the list. If you want to plot solutions in a different component, right-click the **Solution** dataset node and select **Duplicate** ( ). Select another component from the **Component** list in the duplicated **Solution** dataset node, and then refer to that dataset in the plot groups where you want to plot the solution for that component's geometry.
- Select the **Frame** to evaluate the coordinates in: **Mesh**, **Material**, **Geometry**, or **Spatial**. The default in most cases is the Material frame, and this rarely needs to be changed. This frame selection is used for all results evaluations that use the solution dataset.
- Enter a value for the **Solution at angle (phase)** (SI unit: deg). The default is 0 degrees and evaluates complex-valued expressions by multiplying the solution in the solution dataset by a factor of `exp(i*pi*phase/180)` prior to expression evaluation.
- Enter a **Scale factor** (the default is 1; that is, no scaling) to multiply the solution by a real-valued scale factor.

- Deformed Configuration
- Remeshing a Deformed Mesh

Surface (Dataset)

Use a **Surface** ( ) dataset to visualize data on surfaces (boundaries) of a 3D geometry. Refer to this dataset to plot and evaluate a value on a surface using a 2D plot group and a **Surface** or **Contour** plot, for example.

PARAMETERIZATION

Specify how to parameterize the surface. Choose from one of these options in the **x- and y-axes** list to specify what the local x- and y-axes represent:

- **Surface parameters** (the default) uses parameters of the 3D surface, computed using the average normal and by choosing the 2D axes using a set of geometrical rules.
- **xy-plane**, **yz-plane**, **zx-plane**, **yx-plane**, **zy-plane**, and **xz-plane** are the local x- and y-axes representing the global xy-plane, yz-plane, zx-plane, yx-plane, zy-plane, and xz-plane, respectively.
- If **Expression** is selected, enter any expression, including the global spatial coordinates, for example, in the **x-axis** and **y-axis** fields. The default values are **x** and **y**, respectively.

ADVANCED

Select the **Define variables** check box to create space variables for the surface. If needed, change the names of the space variables in the **x** and **y** fields.

Time Average and Time Integral

Select a **Time Average** (AV_t) or **Time Integral** ($\int dt$) dataset, found under the **More Datasets** submenu, to compute the time average or time integral of some time-dependent data in another dataset, for example, to compute time averages or time integrals.

DATA

Select a **Dataset** for the data to compute the time average or time integral. To compute the time average or time integral for a dataset with time-dependent data, select times to include in the average or integral from the **Time selection** list: **All** (the default) to use all time steps, **First** to use the first time step only, **Last** to use the last time step only, **From list** to select from a list of all time steps, **Manual** to enter a range of times as indices directly, or select **Interpolated** to enter **Times**.

SETTINGS

Enter a relative tolerance in the **Tolerance** field (default: 0.001).

In the **Minimum interval length** field, enter a minimum interval length as a number relative to the length of the time interval (default: 10^{-4}). The data is evaluated at least at every stored time step regardless of the value of the minimum interval length.

Derived Values, Evaluation Groups, and Tables

About Derived Values

You can integrate or compute the average, maximum, or minimum of any quantity to compute derived quantities such as total flux; charges; inductances; reaction forces; and average, maximum, and minimum values.

Use **Derived Values** (8.85 e-12) to define evaluations of numerical results — globally, in a point, or integrated quantities. The values appear in a table in the Table window, where you have different options for the precision and notation of the numerical values (see The Table Window and Tables Node below). For 2D and 3D plots, you can also get numerical results directly in a table by clicking the plot.

For all derived values, you can also apply an operator on a data series (from a parametric or Time Dependent study) to compute, for example, the temporal average of a quantity in a point of the domain for which a time-dependent solution is computed. In addition to the average, you can also compute the integral, maximum, minimum, RMS (root mean square), standard deviation, or variance of the data series. The derived values nodes use datasets (typically solution datasets) that provide the data from which the derived values are computed. If needed, specify the frame and geometry to use in the dataset's **Settings** window.

GETTING NUMERICAL RESULTS DIRECTLY

	For 3D and 2D models, the numerical value of the current plot can be displayed by clicking anywhere in the model geometry. For a 3D model, the value is for the point where a ray projected from the point clicked hits the geometry. COMSOL Multiphysics displays the value at that point along with the point's coordinates in a row in an **Evaluation 2D** or **Evaluation 3D** table in the **Table** window. Each click adds a row to the table. From the **Table** window, you can plot or copy the table data to a clipboard like any other table.

	• See Derived Value Types for links to the datasets. • Common Results Node Settings

About Evaluation Groups

An evaluation group is analogous to a plot group: It has zero or more numerical evaluation nodes (all evaluation nodes that are also available under **Derived Values**) as subnodes. The **Evaluation Group** node contains common settings and also acts as the table to which its subnodes evaluate. The values in an evaluation group's table can be reevaluated automatically when solving (see Update of Results). For information about the available evaluation nodes, see Derived Value Types. For information about the evaluation group tables, see The Table Window and Tables Node. To add an **Evaluation Group** node ( ), right-click the main **Results** node and select **Evaluation Group**. Then right-click the **Evaluation Group** node to add the evaluation nodes to be evaluated within that evaluation group. You can evaluate all nodes under an **Evaluation Group** node by right-clicking them or by clicking the **Evaluate** button (=).

From the **Evaluation Group** contextual ribbon toolbar, you can also add evaluation nodes and evaluate them. In addition, you can create graph plots and surface plots by clicking the **Graph Plot** ( ) and **Surface Plot** buttons, respectively; click the **Clear** button ( ) to clear the selected evaluation group; and click the **Copy to Table** button ( ) to copy the selected evaluation group to a table.

The **Evaluation Group** node's **Settings** window contains the following sections:

DATA

In this section you define the data to use for the evaluations. See Common Results Node Settings for more information.

STORAGE

You can also store the evaluation group's table data on the file system instead of, or in addition to, storing it in the model. Select a way to store the table data from the **Store table** list:

- Select **In model** (the default) to store the table data in the model.
- Select **On file** to store the table data in the model to a file that you select by first clicking **Browse** or enter into the **Filename** field.
- Select **In model and on file** to store the table data both in the model and on the file system.

For the storage in the model, specify the buffer size in the **Maximum number of rows** field. The default for new evaluation group tables is taken from the **Results** page in the **Preferences** dialog box (factory setting: 10,000 rows). If the table size exceeds that number of rows, the software removes rows from the top. If you use a large number, most table data will fit in the table without being truncated.

	The row limit applies to table data in the model only and not to tables with data stored in a file.

If you change the storage format to or from storage on file, then click **Update** ( ) in the **Storage** section's header to refresh the contents of the table.

TRANSFORMATION

You can make a transformation of the evaluations in the evaluation group.

Select the **Transpose** check box to transpose the data in the **Evaluation Group** window so that the table presentation contains row headers instead of column headers.

From the **Type** list, choose one of the following transformation types:

- **None**, for no transformation.
- **Sum**, for the sum of all evaluations.
- **Average**, for the average of all evaluations.
- **Difference**, for the difference of all evaluations (`evaluation1–evaluation2–evaluation3`, and so on)
- **General**, for a general expression, which can include global parameters and mathematical and physical constants, for example. Enter the expression for the general transformation in the **Expression** field. To refer to the evaluated results in the subnodes listed in the table below (in the **Feature** column), use the corresponding tags listed in the table's **Tag** column. For example `pi*pev1/pev2` for pi times a quotient of the values from the **Point Evaluation 1** and **Point Evaluation 2** subnodes. The expression is evaluated elementwise.

FORMAT

In this section, use the **Include parameters** list to control which parameters value columns to include in the evaluation group's table: Use **Automatic** (the default) to include the parameter value columns are included for the first active evaluation subnode, which is a good choice if all evaluation subnodes have the same parameter value columns. Otherwise, use **On** to include all parameter value columns, or use **Off** to include no parameter value columns.

The Table Window and Tables Node

The **Table** window displays the results from integral and variable evaluations defined in Derived Values nodes or by probes and stored in Table nodes. It can also display results from nodes under Evaluation Group nodes as an **Evaluation Group** window (see About Evaluation Groups).

See Table for information about the **Settings** window.

A **Tables** subbranch ( ) is found under the **Results** main branch and contains all tables defined in the model. Table nodes can also result from evaluating Derived Values. When you select a Table node to display, the window name changes to the name of the Table (**Table 1**, as in Figure 21-4, for example).

- For Windows users, from the **Home** toolbar, select **Windows>Table**.
- For cross platform (macOS and Linux) users, select **Windows>Table**.

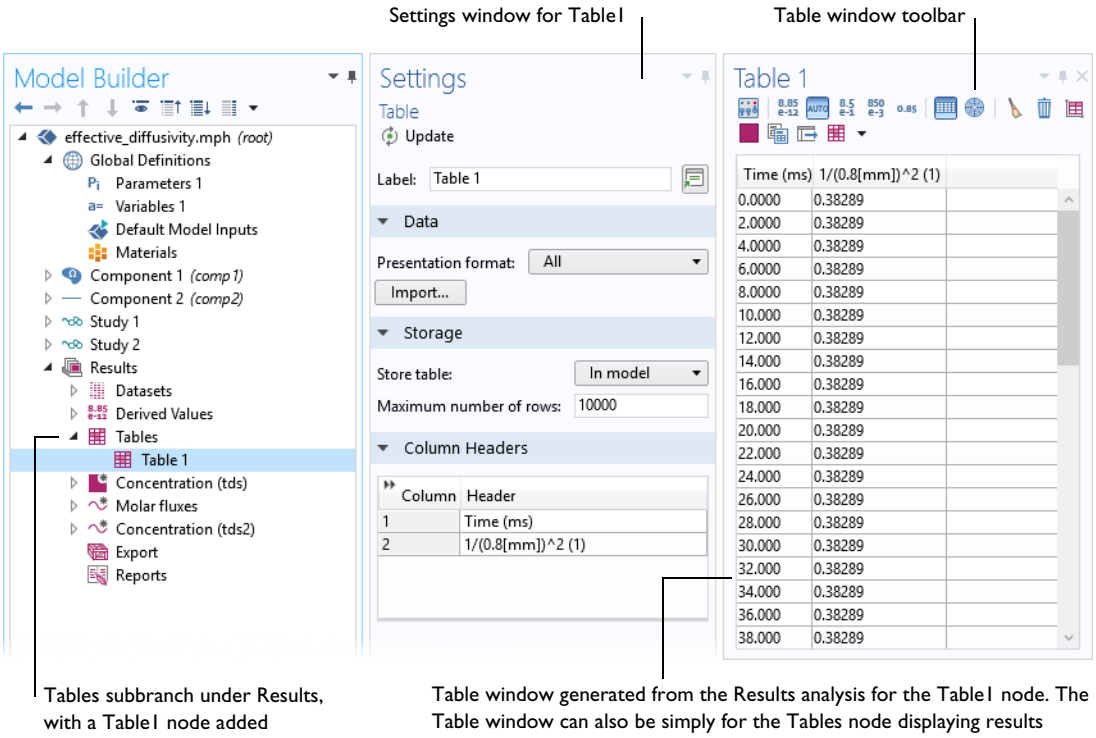

Figure 21-4: A example of the Tables subbranch with a Table node, and the associated settings and Table windows.

You can control the default values for new tables on the **Results** page in the **Preferences** dialog box for the following table properties: maximum number of rows, maximum filled matrix size, and display precision.

TABLE WINDOW TOOLBAR AND MENU OPTIONS

When a **Table** ( ) is generated and displays in the **Table** window, a variety of editing options are available as listed in Table 21-8 and shown in Figure 21-4. For the different notation options, only one of them can be selected.

Likewise, only one of the two forms for displaying complex-valued numbers can be selected, and those forms are only applicable if the table contains some complex-valued numbers with nonzero imaginary part.

TABLE 21-8: TABLE WINDOW EDITING BUTTONS

BUTTON	NAME	DESCRIPTION
	Settings	Open the Table's Settings window.
	Full Precision	Click to display as many significant digits as possible. Integers appear without decimal parts, and nonintegers are shown with roughly 16 significant digits.
	Automatic Notation	This is the default notation, where numbers are formatted in either regular or scientific notation depending on which gives the shortest representation.
	Scientific Notation	The scientific notation, such as `3.1416E-5`, can be easier to read than decimal notation for tables containing values on different scales.
	Engineering Notation	The engineering notation, such as `31.416E-6`, is similar to scientific notation but with the powers of ten as multiples of three.
	Decimal Notation	The decimal notation uses only decimal representation of the numbers, such as `0.000031416`. Small numbers can get long representations because of leading zeros, and large numbers may appear with excess precision.
	Rectangular Complex Number	Display complex-valued numbers as the real part + the imaginary part followed by *i* (the imaginary unit), such as `2.451+0.657i`.
	Polar Complex Number	Display complex-valued numbers using a polar form, consisting of an absolute value or modulus and an angle, such a `0.0786∠-45°`.
	Clear Table	Click to clear the data from the table, but keep the table itself. Click the Evaluate button (=) in the Settings window for the derived values node to regenerate the table data.
	Delete Table	Click to delete the table. There is no undo. If required, click the Evaluate button (=) in the Settings window for the derived values node to regenerate the table data to regenerate the table.
	Table Graph	Click to plot the table as a **Table Graph** plot in the **Graphics** window.
	Table Surface	For tables with filled data, click to plot the table as a **Table Surface** plot in the **Graphics** window.
	Copy Table and Headers to Clipboard	Click the button or right-click anywhere in the table and select this option from the context menu. You can then paste the table's data and headers in a spreadsheet, for example.
	Export	Click to export the table to a text file in a spreadsheet format or to a Microsoft Excel Workbook (*.xlsx) if the license includes LiveLink™ *for* Excel®. When saving to a Microsoft Excel Workbook, an Excel Save dialog box opens where you can specify the sheet and range and whether to overwrite existing data and include a header.
	Display Table	Click to display a menu of available tables to display.
	Delete Column	Right-click a column header or anywhere in the table, and select Delete Column. There is no undo. If required, click the Evaluate button (=) to regenerate the table.
	Copy Cell to Clipboard	Right-click anywhere in the table and select this option from the context menu to copy the contents of the selected cell to the clipboard.
	Copy Selection to Clipboard	Select the rows to copy, then right-click anywhere in the table and select this option from the context menu, or press Ctrl+C.

TABLE 21-8: TABLE WINDOW EDITING BUTTONS

BUTTON	NAME	DESCRIPTION
	Copy Selection and Headers to Clipboard	Select the rows to copy, then right-click anywhere in the table and select this option from the context menu.
	Copy Table to Clipboard	Right-click anywhere in the table and select this option from the context menu.
	Copy Table and Headers to Clipboard	Right-click anywhere in the table and select this option from the context menu.
	Copy Column to Clipboard	Right-click anywhere in the table and select this option from the context menu to copy the selected column to the clipboard.
	Copy Column and Header to Clipboard	Right-click anywhere in the table and select this option from the context menu to copy the selected column and its header to the clipboard.

For a surface integration example that includes tables, see *Effective Diffusivity in Porous Materials*: Application Library path **COMSOL_Multiphysics/Diffusion/effective_diffusivity**.

- Results Analysis and Plots
- Derived Values, Evaluation Groups, and Tables

Derived Value Types

In the **Model Builder**, under **Results**, right-click **Derived Values** ( ). Select an option from the list and continue defining each derived value (see Table 21-9). All of these nodes for various derived values, except where noted, are also available as evaluation nodes under an **Evaluation Group** node. Also, as evaluation nodes, the default settings in the **Dataset** list is **From parent**, which is not available for the corresponding nodes under **Derived Values**.

TABLE 21-9: DERIVED VALUE TYPES (EVALUATION NODES)

LINK TO SECTION	DESCRIPTION
Point Evaluation	To evaluate expressions or variables defined in a point.
Global Evaluation	To evaluate the numerical value of a global variable.
Global Matrix Evaluation	To define the evaluation of the numerical values for a global matrix variable such as S-parameters in a model with several ports activated as a parametric sweep and a frequency-domain study. Not available as an evaluation node in an evaluation group.
Point Matrix Evaluation	To define the evaluation of the numerical values for a matrix variable, such as anisotropic material data in some points in the model. Not available as an evaluation node in an evaluation group.
System Matrix	To evaluate an Assemble or Modal node to a table. Not available as an evaluation node in an evaluation group.
MORE DERIVED VALUES SUBMENU	This submenu contains additional derived value nodes: Particle Evaluation, Ray Evaluation, Aberration Evaluation, and Global Evaluation Sweep.
Particle Evaluation	To evaluate an expression for all, or a subset of, the particles in a particle tracing model.
Ray Evaluation	To evaluate an expression for all, or a subset of, the rays in a Ray dataset.
Aberration Evaluation	To compute Zernike coefficients for Zernike polynomials that correspond to various types of monochromatic aberration in ray optics.
Global Evaluation Sweep	To vary a small number of model parameters as a sweep during postprocessing (for postprocessing of reduced models, for example)

TABLE 21-9: DERIVED VALUE TYPES (EVALUATION NODES)

LINK TO SECTION	DESCRIPTION
AVERAGE SUBMENU	Volume Average, Surface Average, and Line Average
Volume Average	To evaluate an average over a set of domains in 3D models.
Surface Average	To evaluate an average over a set of domains in 2D, 2D axisymmetric, or boundaries in 3D.
Line Average	To evaluate an average over a set of domains in 1D, boundaries in 2D, or edges in 3D.
INTEGRATION SUBMENU	Volume Integration, Surface Integration, and Line Integration
Volume Integration	To evaluate an integral over a set of domains in 3D models.
Surface Integration	To evaluate an integral over a set of domains in 2D, 2D axisymmetric, or boundaries in 3D.
Line Integration	To evaluate an integral over a set of domains in 1D, boundaries in 2D, or edges in 3D.
MAXIMUM SUBMENU	Volume Maximum, Volume Minimum, Surface Maximum, Surface Minimum, Line Maximum, and Line Minimum
Volume Maximum	To evaluate the maximum over a set of domains in 3D models.
Surface Maximum	To evaluate the maximum over a set of domains in 2D, 2D axisymmetric, or boundaries in 3D.
Line Maximum	To evaluate the maximum over a set of domains in 1D, boundaries in 2D, or edges in 3D.
MINIMUM SUBMENU	Volume Maximum, Volume Minimum, Surface Maximum, Surface Minimum, Line Maximum, and Line Minimum
Volume Minimum	To evaluate the minimum over a set of domains in 3D models.
Surface Minimum	To evaluate the minimum over a set of domains in 2D, 2D axisymmetric, or boundaries in 3D.
Line Minimum	To evaluate the minimum over a set of domains in 1D, boundaries in 2D, or edges in 3D.

Volume Average, Surface Average, and Line Average

The derived average values are useful for calculating averaged quantities for each solution in a dataset (a time-dependent solution, for example). Also apply an integral, maximum, or other operation to compute the maximum of an averaged quantity, for example.

Under **Results**, right-click **Derived Values** ( ) or any **Evaluation Group** node ( ), and from the **Average** submenu select:

- **Volume Average** ( ) to evaluate an average over a set of domains in 3D models. The result of the evaluation is stored in a **Table** node and displayed in the **Table** window.
- **Surface Average** ( ) to evaluate an average over a set of domains in 2D, 2D axisymmetric, or boundaries in 3D.
- **Line Average** ( ) to evaluate an average over a set of domains in 1D, boundaries in 2D, or edges in 3D.

Go to Common Results Node Settings for information about these sections: **Data**, **Selection**, **Through-Thickness Location**, **Expressions**, **Integration Settings**, and **Data Series Operations**.

For a line average example, see *Tubular Reactor with Nonisothermal Cooling Jacket*: Application Library path **COMSOL_Multiphysics/Chemical_Engineering/tubular_reactor**.

Volume Integration, Surface Integration, and Line Integration

The derived integration values are useful for calculating integrated quantities for each solution in a dataset (a time-dependent solution, for example). Also apply an average, maximum, or other operation to compute the average of an integrated quantity, for example.

Under **Results**, right-click **Derived Values** ( ) or any **Evaluation Group** node ( ), and from the **Integration** submenu select:

- **Volume Integration** ( ) to evaluate an integral over a set of domains in 3D models. The result of the evaluation is stored in a **Table** and displayed in the **Table** window.
- **Surface Integration** ( ) to evaluate an integral over a set of domains in 2D, 2D axisymmetric, or boundaries in 3D.
- **Line Integration** ( ) to evaluate an integral over a set of domains in 1D, boundaries in 2D, or edges in 3D. Integrate over any dataset of the right dimension. For example, make a volume integration of a 2D revolved dataset or a surface integration of a cut plane.

	Go to Common Results Node Settings for information about these sections: **Data**, **Selection**, **Through-Thickness Location**, **Expressions**, **Integration Settings**, and **Data Series Operation**.

	For volume integration examples, and if you have the: • AC/DC Module, for both a volume and surface integration example, see *Eddy Currents*: Application Library path **ACDC_Module/Inductive_Devices_and_Coils/eddy_currents**. • RF Module, see *Microwave Oven*: Application Library path **RF_Module/Microwave_Heating/microwave_oven**.

	For a surface integration example see *Effective Diffusivity in Porous Materials*: Application Library path **COMSOL_Multiphysics/Diffusion/effective_diffusivity**.

	For line integration examples, and if you have the: • AC/DC Module, see *An RFID System*: Application Library path **ACDC_Module/Inductive_Devices_and_Coils/rfid**. • CFD Module, see *Capillary Filling — Level Set Method*: Application Library path **CFD_Module/Multiphase_Flow/capillary_filling_ls**. • Microfluidics Module, see *Capillary Filling — Level Set Method*: Application Library path **Microfluidics_Module/Two-Phase_Flow/capillary_filling_ls**. • Heat Transfer Module, see *Radiation in a Cavity*: Application Library path **Heat_Transfer_Module/Verification_Examples/cavity_radiation**.

Volume Maximum, Volume Minimum, Surface Maximum, Surface Minimum, Line Maximum, and Line Minimum

The derived maximum and minimum values are useful for calculating maximum or minimum quantities for each solution in a dataset (a time-dependent solution, for example). Also apply an average, maximum (or minimum), or other operation to compute the maximum or minimum over the entire dataset for a quantity, for example.

Under **Results**, right-click **Derived Values** ( ) or any **Evaluation Group** node ( ), and from the **Maximum** or **Minimum** submenus select:

- **Volume Maximum** ( ) or **Volume Minimum** ( ) to evaluate a maximum or minimum value over a set of domains in 3D models. The result of the evaluation is stored in a **Table** and displayed in the **Table** window.
- **Surface Maximum** ( ) or **Surface Minimum** ( ) to evaluate a maximum or minimum value over a set of domains in 2D, 2D axisymmetric, or boundaries in 3D.
- **Line Maximum** ( ) or **Line Minimum** ( ) to evaluate a maximum or minimum value over a set of domains in 1D, boundaries in 2D, or edges in 3D.

ADVANCED

Choose to find the maximum or minimum of the real part or the absolute value, which are different for complex-valued data. Choose **Real part** (the default) or **Absolute value** from the **Find maximum of** or **Find minimum of** list.

Select the evaluation point type from the **Point type** list:

- **Lagrange points** (the default) to evaluate the maximum or minimum value in the Lagrange points. Select a **Lagrange order** (default: 5; the Lagrange order is the number of partitions of an element edge) to adjust the accuracy of the minimum or maximum values.
- **Node points** (the default) to evaluate the maximum or minimum value in the node points of the extended mesh.
- **Integration points** to evaluate the maximum or minimum value in the integration points. Select an **Integration order** (default: 4) to adjust the accuracy of the minimum or maximum values.

	Go to Common Results Node Settings for information about these sections: **Data**, **Selection**, **Through-Thickness Location**, **Expressions**, and **Data Series Operation**.

	For a volume maximum example, and if you have the Nonlinear Structural Materials Module, see *Polynomial Hyperelastic Model*: Application Library path **Nonlinear_Structural_Materials_Module/Hyperelasticity/polynomial_hyperelastic**.

Point Evaluation

Use **Point Evaluation** ( ) to define the evaluation of a variable or an expression in a point. The result is stored in a **Table** node and displayed in the **Table** window.

	• Go to Common Results Node Settings for information about these sections: **Data**, **Through-Thickness Location**, **Expressions**, and **Data Series Operation**. • Table

SUMMATION

Use this section to compute the sum or average over the points. From the **Type** list, select one of these options:

- **None** (the default) to not do any summation.
- **Sum** to compute the sum of the values.
- **Average** to compute the average value.

Global Evaluation

Use a **Global Evaluation** ( ) to define the evaluation of the numerical value of a global variable.

	• Go to Common Results Node Settings for information about these sections: **Data**, **Expressions**, and **Data Series Operation**. • Table

Global Matrix Evaluation

Use a **Global Matrix Evaluation** ( ) to define the evaluation of the numerical values for a global matrix variable such as S-parameters in a model with several ports activated as a parametric sweep and a frequency-domain study. The **Table** window then displays all values for all frequencies in a parametric sweep.

	• Go to Common Results Node Settings for information about the following sections: **Data**, **Through-Thickness Location**, and **Expression**. For the expression, you can only choose from available matrix variables. • Table

DATA SERIES OPERATION

Select an option for operations on the data series for the inner solutions — typically a frequency sweep or time series from a study — and the outer solutions — the parametric sweep (for ports in electromagnetics, for example) — from the **Inner solutions** and **Outer solutions** lists:

- Select **None** to use the computed value as it is (the default).
- Select **Average** to use the average of the computed values for the inner solutions or the outer solutions.
- Select **Sum** to use the sum of the computed values for the inner solutions or the outer solutions.

The **Ignore NaN** check box is selected by default to ignore NaNs in the data for an inner or outer data series operations. If you want to keep values that are NaN, clear this check box. This setting is useful when solving a parametric sweep that computes a single column of the matrix variable at each step, such as when running a Port or Terminal sweep in the AC/DC Module or the RF Module. If the **Ignore NaN** check box is selected, the columns not computed in each step (that are filled with NaN) are ignored when evaluating the complete matrix.

TRANSFORMATION

This section allows specifying a transformation to be applied on the evaluated matrix. The result of the transformation is displayed in the **Table** window. Select a **Transformation** for the matrix. If **None** is selected, the evaluated matrix is displayed. If **Inverse** is selected, the inverse of the evaluated matrix is displayed.

The additional transformations available in the list (such as **From S to Z**) can be used in electrical applications to transform between different lumped parameter matrices of the system, such as the system's impedance matrix, **Z**; admittance matrix, **Y**; and S-parameter matrix, **S**. These matrices are computed in Port or Terminal sweeps (using the AC/DC Module or the RF Module), and are related by simple transformations,

$$Z = Y^{-1}$$
$$Z = Z_0(1+S)(1-S)^{-1}$$
$$S = Y_0(Z-1)(Z+1)^{-1}$$

where Z_0 is the characteristic impedance and Y_0 the characteristic admittance of the ports or terminals. In general, only one of the three matrices is computed by the physics interface and becomes available for evaluation.

Choose the appropriate transformation to compute and display one of the other two matrices. If the transformation requires it, specify a **Characteristic impedance** (SI unit: Ω) or **Characteristic admittance** (SI unit: S).

You can also make a transformation from Maxwell capacitance to mutual capacitance or vice versa by selecting **From Maxwell to mutual** or **From mutual to Maxwell**, and from an inverse Maxwell capacitance to mutual capacitance by selecting **From inverse Maxwell to mutual** (the inverse Maxwell capacitance is the output from sweeps over lumped parameters in electromagnetics). The relationship between the Maxwell capacitance matrix MA and the mutual capacitance matrix MU is that MU_{ij} is equal to $\sum_{k=1\ldots n} \mathrm{MA}_{ik}$ if $i = j$, or equal to $-\mathrm{MA}_{ij}$ otherwise.

The transformation operations are only applicable for square matrices.

Particle Evaluation

Use a **Particle Evaluation** ( ) derived values node to define the evaluation of the numerical value of quantities computed by one of the particle tracing interfaces. This feature requires the Particle Tracing Module. To add this node, right-click the **Derived Values** node or any **Evaluation Group** node and choose **Particle Evaluation** from the **More Derived Values** menu.

- See Common Results Node Settings for information about these sections: **Data** and **Expression**. The dataset must be a Particle (Dataset). If no **Particle** dataset is available then the only option is **None**.
- Derived Values, Evaluation Groups, and Tables

EVALUATION

To specify the particles to evaluate the expression for, the **Particles to evaluate** list contains the following options:

- Select **All** (the default) to evaluate the expression for all particles in the simulation.
- Select **Fraction** to evaluate for a fraction of all particles. Enter a scalar value between 0 and 1 in the **Fraction of particles** field. The default value is 1, which means that the evaluation includes all particles.
- Select **Number** to specify a number of particles to evaluate for in the **Number of particles** field. The default value is 100 particles. If the particle simulation contains fewer particles than the specified number, all particles are included.

The Results Table

Click the **Evaluate** button (=) or right-click the **Derived Values** node and select **Evaluate All** (=) or **Clear and Evaluate All** ( ).

The first column in the table is a list of the **Time** values selected from the **Data** section. There are N additional columns, where N is the number of particles chosen in the **Evaluation** section.

The values in each column correspond to the supplied **Expression** for all the selected **Time** values. Each column contains M rows, where M is the number of **Time** values selected in the **Data** section. By default four digits are displayed; click the **Full precision** button ( ) to display as many significant digits as possible. If required, the precision level can be changed from The Preferences Dialog Box under **General**.

Point Matrix Evaluation

Use a **Point Matrix Evaluation** ( ) to define the evaluation of the numerical values for a matrix variable, such as an anisotropic material property or coordinate system transformation matrix in a point. The **Table** window then displays all values for each selected point and, for example, for each parameter value if the solution includes a parametric sweep.

- Go to Common Results Node Settings for information about these sections: **Data** and **Expression**. For the expression, you can only choose from available matrix variables.
- Table

SELECTION

Select the points where you want to evaluate the matrix using the selection tools in this section. See About Selecting Geometric Entities.

DATA SERIES OPERATION

Select an option for operations on the data series for the inner solutions — typically a frequency sweep or time series from a study — and the outer solutions — the parametric sweep (for ports in electromagnetics, for example) — from the **Inner solutions** and **Outer solutions** lists:

- Select **None** to use the computed value as it is (the default).
- Select **Average** to use the average of the computed values for the inner solutions or the outer solutions.
- Select **Sum** to use the sum of the computed values for the inner solutions or the outer solutions.

The **Ignore NaN** check box is selected by default to ignore NaNs in the data for an inner or outer data series operation. If you want to keep values that are NaN, clear this check box.

Ray Evaluation

Use a **Ray Evaluation** ( ) derived values node to evaluate a quantity computed by the Geometrical Optics or Ray Acoustics interface. This feature requires the Ray Optics Module or the Acoustics Module. This feature requires the Particle Tracing Module. To add this node, right-click the **Derived Values** node or any **Evaluation Group** node and choose **Ray Evaluation** from the **More Derived Values** menu

- See Common Results Node Settings for information about these sections: **Data** and **Expression**. The dataset must be a Ray (Dataset). If no **Ray** dataset is available then the only option is **None**.
- Derived Values, Evaluation Groups, and Tables

EVALUATION

To specify the rays to evaluate the expression for, the **Rays to evaluate** list contains the following options:

- Select **All** (the default) to evaluate the expression for all rays in the simulation.
- Select **Fraction** to evaluate for a fraction of all rays. Enter a scalar value between 0 and 1 in the **Fraction of rays** field. The default value is 1, which means that the evaluation includes all rays.
- Select **Number** to specify a number of rays to evaluate for in the **Number of rays** field. The default value is 100 rays. If the ray simulation contains fewer rays than the specified number, all rays are included.

The Results Table

Click the **Evaluate** button ( ) or right-click the **Derived Values** node and select **Evaluate All** ( ) or **Clear and Evaluate All** ( ).

The first column in the table is a list of the **Time** values selected from the **Data** section. There are *N* additional columns, where *N* is the number of rays chosen in the **Evaluation** section.

The values in each column correspond to the supplied **Expression** for all the selected **Time** values. Each column contains *M* rows, where *M* is the number of **Time** values selected in the **Data** section. By default four digits are displayed; click the **Full precision** button (8.85 e-12) to display as many significant digits as possible. If required, the precision level can be changed from The Preferences Dialog Box under **General**.

Aberration Evaluation

Use the **Aberration Evaluation** (8.85) derived values node to compute a list of Zernike coefficients for Zernike polynomials that correspond to various types of monochromatic aberration that arise when electromagnetic rays are focused by a system of lenses and mirrors. An Intersection Point 3D dataset (see Intersection Point 2D and Intersection Point 3D) pointing to a Ray (Dataset) dataset must be used. The dataset must point to an instance of the Geometrical Optics interface in which the optical path length is computed. To add this node, right-click the **Derived Values** node or any **Evaluation Group** node and choose **Aberration Evaluation** from the **More Derived Values** menu.

In addition, in the **Settings** window for the Intersection Point 3D dataset, **Hemisphere** must be selected from the **Surface type** list. The **Center** of the hemisphere corresponds to the focus and the **Axis direction** points from the focus toward the center of the exit pupil in the focusing system.

The **Aberration Evaluation** derived values node is available with the Ray Optics Module.

FILTERS

Use the options in the **Filters** section to exclude some rays from the calculation of the Zernike coefficients.

- Select the **Filter by wavelength** check box to exclude all rays except those of a specified vacuum wavelength. If this check box is selected, enter a **Wavelength** (default: 632.8 nm) and a **Tolerance** (default: 1 nm). If the difference between the specified wavelength and the vacuum wavelength of a ray exceeds this tolerance, then the ray will be ignored.
- Select the **Filter by release feature index** check box to exclude all rays except those released by a specific physics feature. Then enter an integer value for the index; the default is 1. This field is 1-indexed, meaning that 1 corresponds to the first ray release feature, 2 is the second ray release feature, and so on.
- Select the **Filter by number of reflections** check box to include rays only if they have reflected a specified number of times. Then enter an integer for the number of reflections; the default is 0. For this option to work correctly, it is necessary to select the **Count reflections** check box in the settings for the Geometrical Optics interface, before running the study.
- Select the **Filter by additional logical expression** check box to include rays if they satisfy another user-defined expression. The expression is considered to be true if it returns a nonzero value. The default expression is 1, which would cause all rays to be included.

ZERNIKE COEFFICIENT CALCULATION

The optical path difference among all rays that pass through the exit pupil is computed. Then a linear least-squares fit is used to express the optical path difference as a linear combination of a standard set of orthogonal polynomials on the unit circle, called *Zernike polynomials*. The polynomials are scaled by the coefficients that are computed by the least-squares fit, called the *Zernike coefficients*.

Select the **Length unit** in which the Zernike coefficients will be given. The default is the micron (μm). This input is disabled if the model is dimensionless.

Select an option from the **Maximum polynomial order** list: **2**, **3**, **4**, or **5** (the default).

	A list of Zernike polynomials and their derivation, properties, and references are included in the Ray Optics Modeling chapter of the *Ray Optics Module User's Guide*.

Global Evaluation Sweep

Use the **Global Evaluation Sweep** ( ) derived values node to vary a small number of model parameters as an evaluation sweep during postprocessing. A global evaluation sweep can be useful for postprocessing of reduced models, for example. To add this node, right-click the **Derived Values** node or any **Evaluation Group** node and choose **Global Evaluation Sweep** from the **More Derived Values** or **More Evaluations** menu, respectively.

	• See Common Results Node Settings for information about the **Data** and **Expressions** sections. • Model Reduction

PARAMETERS

Use the **Sweep type** list to specify the type of sweep to perform. The **Specified combinations** type (the default) sweeps over a number of given combinations of values, while the **All combinations** type sweeps over all combinations of values. Using all combinations can lead to a very large number of sweeps.

Use the table with **Parameter name** and **Parameter value list** to specify parameter names and values for the global evaluation sweep. Use the **Add** button ( ) to add a row to the table. Each row has one parameter name, a corresponding parameter value list, and an optional unit. The unit becomes orange if the unit that you specify does not match the unit given for the parameter where it is defined. For the **Specified combinations** sweep type, the list of values must have equal length. When you click in the **Parameter value list** column to define the parameter values, you can click the **Range** button ( ) to define a range of parameter values. The parameter unit overrides the unit of the global parameter. If no parameter unit is given, parameter values without explicit dimensions are considered dimensionless. Use the **Move Up** ( ), **Move Down** ( ), and **Delete** ( ) buttons as needed. In addition, use the **Clear Table** button ( ) to clear the entire table. Click the **Range** button ( )when the focus is in a **Parameter value list** cell to define a list of parameter values using the **Range** dialog box.

	The list of parameters in the **Parameter name** column contains parameters from **Parameters** nodes where the **Show in parameter selections** check box is selected.

If more than one parameter name have been specified, the lists of parameter values are interpreted as follows: Assume that the parameter names are `p1` and `p2`, and that `p1` has the list 1 3 and `p2` has the list 2 4. For the **Specified combinations** sweep type, the solver first uses `p1` equal to `1` and `p2` equal to `2`. Thereafter, it uses `p1` equal to `3` and `p2` equal to `4`. And when the sweep type is **All combinations**, the sweep uses the following order for the parameter combinations: 1 2, 1 4, 3 2, and 3 4.

System Matrix

Use a **System Matrix** ( ) derived values node to evaluate a matrix defined in an **Assemble** or **Modal Solver** node to a table.

SOLUTION

Select a **Solution** from the list to specify which **Solver** branch to tabulate the system matrix for. From the **Solver feature** list, select the **Assemble** or **Modal Solver** node that computes the system matrix.

OUTPUT

Select a **Matrix**: **Stiffness matrix** (the default), **Damping matrix**, **Mass matrix**, or any other system matrix that the selected **Assemble** or **Modal Solver** node computes.

First select the system matrices to assemble or compute in the **Settings** window for the **Assemble** or **Modal Solver** node and then compute the solution so that the solver stores these system matrices. Selecting a system matrix that has not been computed and stored results in an error.

Select a **Format**: **Sparse** (the default) or **Filled**. The system matrices can become very large but are usually sparse (most matrix elements are zero). If **Filled** is selected, the preference setting for the maximum filled matrix size (the default is 100) prevents the creation of a table with a very large matrix. Typically, when this is an Assemble node, a filled matrix output can only be used for very small models or when using reduced matrices.

When the System Matrix is a Modal Solver, the matrices of interest are typically small and filled.

- Introduction to Solvers and Studies and Solution Utility Nodes
- Derived Values, Evaluation Groups, and Tables

Table

Tables can store the results of **Derived Values** and results from probes, for example. The results are displayed in the **Tables** window, which by default is located below the **Graphics** window.

If you make any changes to the Table settings, click the **Update** button) at the top of the **Settings** window.

A **Table** node is added under **Tables**. Click the node to display a table with the selected integration node's description and values in the **Table** window.

You can use Table Graph and Table Surface nodes to plot the data in the tables.

The Table Window and Tables Node

There are three ways to evaluate a **Derived Values** node and put the result in a **Table**:

- Click the **Evaluate** button (=) found in the top-left corner of, for example, a **Settings** window for **Volume Integration**, **Surface Integration**, or **Line Integration**.
- In the **Model Builder**, right-click the specific **Derived Values** node (for example, **Volume**, **Surface**, or **Line Integration**) and select **Evaluate**.
- In the **Model Builder**, right-click the **Derived Values** node, and select **Evaluate All** (=) to evaluate all the **Derived Values** nodes. This appends the results to any existing tables. Select **Clear and Evaluate All** ( ) to first clear the affected tables and then evaluate all the **Derived Values** nodes.

In addition, you can specify the output table for data from a probe in the **Table and Windows Settings** section of the probe **Settings** window. Also, for nested parametric sweeps, you can add an accumulated probe table, which provides a matrix of values where the rows and columns represent two independent parameters.

To delete all tables, right-click the main **Tables** node and select **Delete All** ( ). To clear the contents of all tables, right-click the main **Tables** node and select **Clear All**.

DATA

If applicable (for accumulated probe tables, for example) select a data format from the **Presentation format** list: **All** (the default) or **Filled**:

- **All** displays all data in the table. For many tables, that is the only available format.
- Select **Filled** to create a matrix of data from, for example, a nested parametric sweep with independent parameters.

The table itself can be filled regardless of the settings in the **Presentation format** list.

Filled tables can only be produced by studies that have **All combinations** selected in their parametric sweeps. The filled tables make it possible to retrieve data for a pair of parameters on a matrix format and can be used to make response surface plots, for example. You can get filled tables from some probes or from using derived values when all solutions are selected. Basically, you get filled tables when the input parameters in a parametric sweep (such as time) represent a full outer product. In some cases, such as eigenvalue solutions or if the solver is interrupted, the data is not filled. Also, if you modify the table by, for example, evaluating more than once into the same table or delete columns, the table data is no longer filled.

For a **Filled** presentation format, under **Column headers**, select a **Column description** (in addition to the parameter values): **None**, **From data** (the default), or **Manual**. If you select **Manual**, type the description in the **Description** field; that description is then added to the parameter values in the header of each column.

Under **Filled data structure**, select the parameters to use for the rows and the columns from the **Rows** and **Columns** lists, and select the data (probed quantity, for example) to use in the table from the **Data** list. These settings are available when the table is filled, also when the presentation format is set to **All**.

Click the **Import** button to import data from, for example, a spreadsheet. In the **Import** dialog box that opens, select a data file to import. You can import data from text files (*.txt), CSV files (*.csv), and data files (*.dat). If the license includes LiveLink™ *for* Excel®, you can also import data from a Microsoft Excel® file (some or all of *.xlsx, *.xls, *.xlsb, *.xlsm). The supported Excel file formats depend on whether Excel is installed or not (see Supported Microsoft Excel File Types in the *COMSOL Multiphysics Programming Reference Manual*).

The imported data replaces any existing data in the table.

You can import data in multiple **Table** nodes to plot exported solution data from different models in the same graph. To do so, after importing the data, create a 1D Plot Group and then add Table Graph nodes that point to each of the tables.

STORAGE

You can also store the table data on file instead of, or in addition to, storing it in the model. Select a way to store the table data from the **Store table** list:

- Select **In model** (the default) to store the table data in the model.

- Select **On file** to store the table data in the model to a file that you select by first clicking **Browse** or enter into the **Filename** field. This makes it possible to, for example, keep track of more data using probes while solving without having to put all the data in the model.
- Select **In model and on file** to store the table data both in the model and on file.

For the storage in the model, specify the buffer size in the **Maximum number of rows** field. The default for new tables is taken from the **Results** page in the **Preferences** dialog box (factory setting: 10,000 rows). If the table size exceeds that number of rows, the software removes rows from the top. If you use a large number, most table data will fit in the table without being truncated.

	The row limit applies to table data in the model only and not to tables with data stored on a file.

COLUMN HEADERS

You can specify the headers for each column in the table when the presentation format is set to **All**. In the **Header** column, enter the header that you want to use for the corresponding column. When you import table data from a file, COMSOL Multiphysics uses the contents of the last comment row preceding the data to create column headers, which you can edit if desired. For comma-separated data and column headers, the CSV (comma-separated) data file format (.csv files) works best. If a CSV file contains exactly one row without data preceding the data, and the nondata row contains the right number of columns, the import interprets the contents of that row as column headers.

LOCATION IN USER INTERFACE

To add a **Table** node, if not already created, right-click the **Tables** ( ) node and select **Table**. You can also add a table by clicking the **Evaluate (New Table)** button (=), which is in the top-left corner of, for example, a **Settings** window for **Volume Integration**, **Surface Integration**, or **Line Integration**. This evaluates the node and stores the result in a new table. This button is also used as the **Evaluate** button.

Plot Groups and Plots

About Plot Groups

A plot group contains one or more plots (for example, combining a surface plot and a streamline plot) using the same or separate datasets, such as a solution. All active plots in a plot group appear in the same plot window. You can define plot groups for 1D, 2D, 3D, polar, and Smith plots (requires the RF Module or the AC/DC Module) and then create an individual or a series of plots in a plot group. You can use several plot groups of the same type in a model and plot them in the Graphics window or in another plot window that you can add if needed. Information in the form of data and images can be used to generate a report or be exported.

Attributes can also be added as subnodes to a plot to modify the plot's behavior — **Deformation** ( ) attributes deform a plot (to illustrate, for example, structural deformation); **Color Expression** ( ) attributes modify the color of a plot; filtering to only include parts of the plot is available using the **Filter** ( ) attribute; **Selection** ( ) attributes limit the plot to a selected subset of the geometry; and **Export Expressions** ( ) attributes can add quantities to the data export for streamline, radiation pattern, and trajectories plots. A **Height Expression** ( ) can also be added to some 2D plots. You can also select appropriate color tables for the plots' color expressions based on your audience and what you plan to do with the final analysis.

The physics interfaces create suitable default plots for visualizing the results for the particular physics or application. The default plots appear in plot groups with descriptive names. You can modify and delete these plots and plot groups and add additional plots to existing or new plot groups. To disable the default plots for a study, clear the **Create default plots** check box in the **Study Settings** section in the main **Settings** window for a **Study** node.

ADDING PLOTS TO PLOT GROUPS

Under **Results** ( ) in the **Model Builder**, right-click the **Plot Group** node and select an option from the context menu to plot the graphs listed in Table 21-10. Each plot group can have several plots combined to create a meaningful representation of the data.

When the plot type is defined, click the **Plot** button ( ), press F8, or right-click the node and select **Plot**. The plot displays in the window selected from the **Plot window** list. To plot results in another window, right-click the plot group node or the plot node and select a plot window from the **Plot In** submenu.

	• At any time during plot creation, click the **Plot** button ( ) to visualize a dataset or plot. • When you are working with **Functions**, you can also click the **Create Plot** button ( ) to create a customized plot of the function under **Results**, including default plot groups and plots. • The time-related settings only display on the interfaces for time-dependent models.

	• See Plot Types for a summary of the available plot types, including links. • Results Toolbar and Plot Group Contextual Toolbar • Creating Cross-Section Plots and Combining Plots

COPYING PLOT DATA TO CLIPBOARD

For plots in plot groups, you can right-click the plot node and choose **Copy Plot Data to Clipboard** ( ). The plot data is then directly available on the clipboard so that it can be pasted into a document or spreadsheet without the need to add an **Export>Data** node.

The time-related settings only display for time-dependent models.

Plot Types

The following table lists the available plot types, including links to the description of the properties and settings.

TABLE 21-10: PLOT TYPES

NAME AND LINK	DESCRIPTION	PLOT ATTRIBUTES
Admittance Graph	Plot an admittance graph as a Smith plot. This plot requires the RF Module, AC/DC Module, MEMS Module, or Plasma Module.	Color Expression, Filter
Annotation	Add annotations to plots.	Deformation
Annotation Data	Plot raw point, text, and color data as annotations in 2D or 3D.	None
Arrow Data	Plot raw point, vector, and color data as arrows in 2D or 3D.	None
Arrow Line	Plot a vector quantity as arrows on lines or edges (3D).	Color Expression, Deformation, Filter, and Selection
Arrow Point	Plot a vector quantity as arrows at points.	Color Expression, Deformation, Filter, and Selection
Arrow Surface	Visualize a vector quantity in arrows.	Color Expression, Deformation, Filter, and Selection
Arrow Volume	Visualize a vector quantity as arrows in a volume.	Color Expression, Deformation, Filter, and Selection
Contour (Plot)	Visualize a scalar quantity as a contour plot.	Color Expression, Deformation, Filter, Selection, and Height Expression (2D only)
Coordinate System Volume, Coordinate System Surface, and Coordinate System Line	Plot coordinate systems for 2D and 3D models. Found on the More Plots submenu.	Deformation, Filter, and Selection
Directivity	Plot the directivity as a plot for speakers, for example. This plot requires the Acoustics Module.	None
Global	Plot a global scalar quantity as a function of time or a parameter.	Color Expression, Filter
Histogram	Plot a histogram showing the distribution of a quantity.	None
Impedance Graph	Plot an impedance graph as a Smith plot. This plot requires the RF Module, AC/DC Module, MEMS Module, or Plasma Module.	Color Expression, Filter
Impulse Response	Plot an impulse response plot. This plot requires the Acoustics Module.	Color Expression

TABLE 21-10: PLOT TYPES

NAME AND LINK	DESCRIPTION	PLOT ATTRIBUTES
Interference Pattern	This plot shows the intensity on a cut plane resulting from the interference of multiple rays passing through the cut plane.	None
Isosurface (Plot)	Plot a scalar quantity as an isosurface plot.	Color Expression, Deformation, Filter, and Selection
Layered Material Slice	Plot a layered material quantity as a slice plot at a specified through-thickness location. This plot requires the Composite Materials Module, AC/DC Module, or Heat Transfer Module.	Deformation, Filter, and Selection
Matrix Histogram	Plot a quantity on lines, boundaries (2D), or edges (3D).	Deformation, Filter, Selection, and Height Expression (2D only)
Line Data	Plot raw point, element, and color data as a line in 2D or 3D.	None
Line Graph	Plot a scalar quantity along a geometric line. The line can be an edge in the geometry, a parameterized curve, or a cut line.	Color Expression, Filter
Max/Min Volume, Max/Min Surface, Max/Min Line, Max/Min Point	Plot the maximum and minimum of an expression and the points where they are attained within the geometry. Found on the More Plots submenu.	Deformation, Filter, and Selection
Matrix Histogram	Plot a precomputed matrix as a 2D histogram. For rainflow counting, for example, to be able to visualize how the stress amplitudes and mean stresses are distributed. This plot requires the Fatigue Module.	None
Mesh (Plot)	To display a mesh.	Deformation, Filter, and Selection
Multislice	Display a scalar quantity on slices in multiple directions inside a 3D domain. Found on the More Plots submenu.	Deformation, Filter, and Selection
Nyquist	Display a Nyquist plot, which shows the magnitude and phase of a frequency response.	Color Expression, Filter
Octave Band	Display an octave band plot to represent a frequency response in frequency bands.	None
Optical Aberration	Display a linear combination of Zernike polynomials based on the optical path difference of light rays as they are focused by a system of lenses and mirrors. This plot requires the Ray Optics Module.	Height Expression
Particle (Plot)	Plot a particle variable versus time for all particles, or plot one particle property versus another at a set of time steps. Available with 1D Plot Groups. This plot requires the Particle Tracing Module.	Color Expression and Filter

TABLE 21-10: PLOT TYPES

NAME AND LINK	DESCRIPTION	PLOT ATTRIBUTES
Particle Tracing	Visualize the trajectory of a massless particle subject to a flow field. Found on the More Plots submenu.	Color Expression and Deformation
Particle Tracing with Mass	Make a particle tracing plot considering the particle's mass. Found on the More Plots submenu.	Color Expression and Deformation
Particle Trajectories and Filter for Particle Trajectories	Visualize the trajectories of particles computed by one of the Particle Tracing physics interfaces. This plot requires the Particle Tracing Module.	Color Expression, Deformation, Export Expressions, and Filter
Phase Portrait	Visualize particle traces using a phase portrait in 2D. Found under the More Plots submenu. This plot requires the Particle Tracing Module.	Color Expression
Poincaré Map	Visualize particle traces as a Poincaré map in 2D, 2D axial symmetry, and 3D. Found on the More Plots submenu. This plot requires the Particle Tracing Module.	Color Expression
Point Data	Plot raw point, element, and color data as points in 2D or 3D.	None
Point Graph	Visualize the value in a point along time or a parameter value. The point can be a point in the geometry or a cut point.	Color Expression, Filter
Point Trajectories and Filter for Point Trajectories	Visualize the trajectories of points in 3D. Found on the More Plots submenu.	Color Expression, Deformation, Export Expressions, and Filter
Principal Stress Volume	Plot principal stress and strain in structural mechanics models. Found on the More Plots submenu.	Color Expression, Deformation, Filter, and Selection
Principal Stress Surface	Plot principal stress and strain in structural mechanics models. Found on the More Plots submenu.	Color Expression, Deformation, Filter, and Selection
Principal Stress Line	Plot principal stress and strain in structural mechanics models. Found on the More Plots submenu.	Color Expression, Deformation, Filter, and Selection
Radiation Pattern	Plot the value of a global variable for the radiation pattern of an electromagnetic or acoustic pressure field, for example.	Deformation, Export Expressions

TABLE 21-10: PLOT TYPES

NAME AND LINK	DESCRIPTION	PLOT ATTRIBUTES
Ray (Plot) and Filter for Ray and Ray Trajectories	Plot a ray variable versus time for all rays, or plot one ray property versus another at a set of time steps. Available with 1D Plot Groups. This plot requires the Ray Optics Module or the Acoustics Module.	Color Expression and Filter
Ray Trajectories and Filter for Ray and Ray Trajectories	Visualize the trajectories of rays computed by the Geometrical Optics interface or Ray Acoustics interface. This plot requires the Ray Optics Module or the Acoustics Module.	Color Expression, Deformation, Export Expressions, and Filter
Reflection Graph	Plot a reflection graph as a Smith plot. This plot requires the RF Module, AC/DC Module, MEMS Module, or Plasma Module.	Color Expression, Filter
Scatter Surface Scatter Surface and Scatter Volume	Scatter surface plots, found on the More Plots submenu, visualize a scalar quantity as scattered spheres or disks. The radius of the spheres can be proportional to the value of a quantity.	None
Scatter Volume Scatter Surface and Scatter Volume	Scatter volume plots can be used as alternatives to arrow plots for scalar quantities or when to get a feeling for how entities correlate.	None
Slice	Display a scalar quantity on slices inside a 3D domain.	Deformation, Filter, and Selection
Spot Diagram	Display the positions of rays as they intersect an image plane. This plot includes some capability to automatically identify the image plane and compute the intersection points of rays that cross it.	Color Expression
Streamline	Plot a vector field as a streamline plot.	Color Expression, Deformation, Export Expressions, Filter, and Selection
Streamline Surface	Plot a vector field as a streamline plot on surfaces in 3D.	Color Expression, Deformation, Export Expressions, and Filter
Surface (Plot)	Display a quantity on a 2D domain or a 3D boundary.	Deformation, Filter, Selection, and Height Expression (2D plots)
Surface Data	Plot raw point, element, and color data as a surface in 2D or 3D.	None
Surface Slit	Display a quantity by evaluating one expression on one side and another expression on the other side on a 3D boundary.	Deformation, Filter, and Selection
Table Graph	Table plots display data from a table with one line per output column.	None
Table Surface	Used with 2D plot groups to visualize the data in a table that represents a matrix of values that are functions of two independent parameters.	Height Expression

TABLE 21-10: PLOT TYPES

NAME AND LINK	DESCRIPTION	PLOT ATTRIBUTES
Through Thickness	Display the through-thickness variation of a layered shell quantity at specified points. This plot requires the Composite Materials Module, AC/DC Module, or Heat Transfer Module.	Color Expression, Filter
Tube Data	Plot raw point, element, and color data as a tube in 2D or 3D.	None
Volume	To display a quantity inside a 3D domain.	Deformation, Filter, and Selection
Waterfall	Create a waterfall diagram, which is a plot that can illustrate how an expression depends on two parameters in a sweep. Found on the More Plots submenu,	Color Expression
Whirl	Display a plot of the mode shapes of a rotor rotated about the rotor axis at discrete rotation intervals. This plot type, found on the More Plots submenu, requires the Rotordynamics Module.	Color Expression
PLOT ATTRIBUTES		**ADD TO THESE PLOTS**
Color Expression	To add coloring to the shapes defined by a plot.	Arrow (line, surface, and volume), contour, isosurface, particle tracing, particle trajectories, point trajectories, principal stress, ray, ray trajectories, streamline, streamline surface, and spot diagram.
Deformation	Deform the plot according to a vector quantity, for example, the displacement field in structural mechanics.	All plots except scatter plots.
Export Expressions	Add expressions for exporting data.	Streamline, streamline surface, radiation pattern, particle trajectories, point trajectories, and ray trajectories.
Filter, Filter for Particle Trajectories, Filter for Point Trajectories, and Filter for Ray and Ray Trajectories	Filter the element selection for a plot.	Admittance graph, arrow (line and surface), contour, coordinate system (line and surface), global, impedance graph, isosurface, line graph, line plot, mesh, Nyquist, particle trajectories, point graph, point trajectories, principal stress, ray, ray trajectories, reflection graph, slice, streamline, streamline surface, surface, and volume.
Height Expression	Height attributes introduce a 3D height on a 2D surface plot.	2D line plot, optical aberration, 2D surface plot, and 2D table surface plot.
Selection (Plot Attribute)	Add a selection of geometric entities for which to show the plot.	Arrow (line, surface, and volume), contour, coordinate system (line, surface and volume), isosurface, line plot, multislice, principal stress, slice, streamline, surface, and volume.
CROSS SECTION PLOTS		
*1D, 2D, and 3D Cross-Section Point Plots	A point cross-section plot makes it easy to view an expression at an arbitrary set of spatial coordinates and results in a line plot.	
*2D Cross-Section Line Plots and 3D Cross-Section Line Plots	Create lines through 2D and 3D geometries to visualize along the line. Also explains how to use the interactive cross-section toolbar buttons.	

TABLE 21-10: PLOT TYPES

NAME AND LINK	DESCRIPTION	PLOT ATTRIBUTES
*3D Cross-Section Surface Plot	Create planes through a 3D model in a 2D geometry to visualize on the plane. The cut plane corresponds to an orthogonal 2D coordinate system embedded in 3D. Also explains how to use the interactive cross-section toolbar buttons.	
* Cross-section plots are not selected from this menu. Instead, these are created in two steps using datasets and plot groups to generate the plot or use interactive cross-section toolbar buttons.		

The Plot Windows

Plot windows are also graphics windows. COMSOL Multiphysics generates such plot windows for displaying convergence results and to monitor probe values while solving (if your model contains probes). To create a new plot window, choose **Plot In>New Window** from the context menu for a plot group.

- At any time during plot creation, click the **Plot** button ( ) to visualize a dataset or plot.
- When you are working with **Functions**, you can also click the **Create Plot** button ( ) to create a customized plot of the function under **Results**, including default plot groups and plots.
- You can close all plot windows (except the main **Graphics** window) by right-clicking the **Results** node ( ) and selecting **Close All Plot Windows** ( ).

This section explains how to add plot windows, specify the window to plot in, and lock plot windows.

ADDING PLOT WINDOWS

The COMSOL Desktop always includes The Graphics Window, which is the default window for all kinds of plots, but you can also add other plot windows for results plots by right-clicking a plot group node and choosing **Plot In>New Window** or by adding a plot window in the **Window Settings** section of the plot group nodes' **Settings** windows.

SPECIFYING THE WINDOW TO PLOT IN

The default for all plot groups is to plot in the **Graphics** window, but you can plot in any other plot window by right-clicking the plot group node and choosing another plot window from the **Plot In** submenu. The **Plot In** submenu also exists in the context menu for each plot type if you want to plot only an individual plot type in a plot group. You can also control where the plots appear and add new plot windows in the **Window Settings** section of the **Settings** windows for the plot group nodes.

To create and update all plots in all plot windows, right-click the **Results** node and select **Plot All** ( ). If more than one plot group use the same plot window, that plot window contains the plots from the last plot group.

LOCKING PLOT WINDOWS

If you want to prevent a plot in a plot window from being overwritten by other plots, you can lock the plot window. To prevent a plot displaying in this window from being overwritten by other plots, click the **Lock Plot Window** button ( ) on the plot window toolbar. Any attempt to create a plot in a locked plot window then results in a message such as **Window 'Plot 1' is locked** in the **Messages** window. Click the **Lock Plot Window** button ( ) again to clear the lock. It is not possible to lock the **Graphics** window, which COMSOL Multiphysics uses for general visualization.

- Getting Results While Solving
- Results Toolbar and Plot Group Contextual Toolbar
- The Graphics Window

Creating Cross-Section Plots and Combining Plots

Cross-section plots are created using a combination of datasets and plot groups. Cross-section plots show the values over time, along a parametric solution, or for several eigenvalues. Cross-section plots visualize a quantity as a family of plots on:

- An arbitrary set of points (in 1D, 2D, or 3D)

  A point cross-section plot makes it easy to view an expression at an arbitrary set of spatial coordinates and results in a line plot. See 1D, 2D, and 3D Cross-Section Point Plots.

	Expressions and variables that include derivatives of the dependent variables (for example, stresses in a structural analysis) are not available at isolated geometry vertices (points).

- An arbitrary line (in 2D or 3D). See 2D Cross-Section Line Plots and 3D Cross-Section Line Plots.

  Use Cut Line datasets to create lines through 2D or 3D geometries to visualize along the line. All plots and results analysis nodes available in 1D are available for Cut Line datasets as well as 3D plots and results analysis nodes for edges.
- Arbitrary planes (in 3D) using a surface plot and cut plane dataset. See 3D Cross-Section Surface Plot.

  Use Cut Plane datasets to create planes through a 3D geometry in a 2D geometry to visualize on the plane. All plots and results analysis nodes available in 2D are available for Cut Plane datasets as well as for surfaces in 3D. The cut plane corresponds to an orthogonal (Cartesian) 2D coordinate system embedded in 3D.

A typical cross-section plot uses a Cut Line 2D dataset (which you add in the **Data Sets** branch), which defines a straight line (or set of parallel lines) in a 2D geometry, and a Line Graph in a 1D Plot Group, which uses the Cut Line 2D dataset as its data input. You can use the same Cut Line dataset for multiple cross-section plots of various quantities along the line that the dataset defines, and you can create several Cut Line datasets to plot quantities along different lines of interest.

INTERACTIVE CROSS-SECTION LINE AND SURFACE PLOTS

You can also interactively create cross-section line and surface plots using a combination of cross-section toolbar buttons and clicking the geometry. When you use the cross-section toolbar, plot groups and datasets are automatically added and updated in the Model Builder whenever any line or plane is changed. See Creating Interactive 2D Cross-Section Line Plots, Creating Interactive 3D Cross-Section Line Plots, and Creating Interactive 3D Cross-Section Surface Plots.

The following sections give examples on how to create cross-section plots.

	• Plot Groups and Plots • Results Toolbar and Plot Group Contextual Toolbar • See Table 21-10 for links to all the plots.

Plotting and Cross-Section Interactive Toolbar

On the **2D Plot Group** or **3D Plot Group** toolbars, interactive buttons are available based on the plot type. Use these buttons during the creation of cross-section plots or in general while creating plots.

	• Plot Group Contextual Toolbar • Results Toolbar and Plot Group Contextual Toolbar • See Table 21-10 for links to all the plots.

TABLE 21-11: PLOTTING AND CROSS-SECTION TOOLBAR

ICON	NAME	USE AND RESULT
	Evaluate Along Normal	If you click in a point in the graphics window when a 3D view is shown, then the ray that begins in the point on the screen is intersected with the surfaces of the plot and the color in the first intersection is evaluated to a table with four columns: (x, y, z, color).
	Evaluate	In 2D, if you click on the plot, then the value of the expression that defines the color in that point is evaluated to a table. It contains three columns: (x, y, value).
	First Point for Cut Line	Available for 2D and 3D plot groups to create a cross-section line plot. Adds a **Cut Line** dataset and a **1D Plot Group** with a **Line Graph** that uses this dataset. Click these buttons to plot a cross-section of data between two points.
	Second Point for Cut Line	
	Cut Line Direction	Available with 3D plot groups to create a cross-section line plot. Adds a **Cut Line** dataset and a **1D Plot Group** with a **Line Graph** that uses this dataset. Click this button to plot a line perpendicular to a point selected in the Graphics window.
	Cut Line Surface Normal	Available with 3D plot groups to create a cross-section line plot. Adds a **Cut Line** dataset and a **1D Plot Group** with a **Line Graph** that uses this dataset. Click this button to plot a line in the same way as a domain point probe, with point and direction.
	First Point for Cut Plane Normal	Available with 3D plot groups to create a cross-section surface plot. Adds a **Cut Plane 3D** dataset and a **2D Plot Group** with a **Surface** plot that uses this dataset. Click these buttons to plot a cross-section of data between the two points along the plane.
	Second Point for Cut Plane Normal	
	Cut Plane Normal	Available with 3D plot groups to create a cross-section surface plot. Adds a **Cut Plane 3D** dataset and a **2D Plot Group** with a **Surface** plot that uses this dataset. Click this button to plot a plane perpendicular to a point selected in the Graphics window.
	Cut Plane Normal from Surface	Available with 3D plot groups to create a cross-section surface plot. Adds a **Cut Plane 3D** dataset and a **2D Plot Group** with a **Surface** plot that uses this dataset. Click this button to plot a plane.
	Surface	Click this button to add a Surface plot to a 2D or 3D Plot Group.
	Surface with Height	Click this button to add a surface plot with a height attribute to a 2D Plot Group.
	Arrow Surface	Click this button to add an Arrow Surface plot to a 2D Plot Group.
	Streamline	Click this button to add a Streamline plot to a 2D or 3D Plot Group.

TABLE 21-11: PLOTTING AND CROSS-SECTION TOOLBAR

ICON	NAME	USE AND RESULT
	Line	Click this button to add a Line plot to a 2D or 3D Plot Group.
	Slice	Click this button to add a Slice plot to a 3D Plot Group.
	Isosurface	Click this button to add an Isosurface plot to a 3D Plot Group.
	Volume	Click this button to add a Volume plot to a 3D Plot Group.
	Arrow Volume	Click this button to add an Arrow Volume plot to a 3D Plot Group.

NOTES ABOUT USING THE CROSS-SECTION INTERACTIVE TOOLBAR

The first time any button is clicked on the cross-section toolbar, a dataset and a plot group containing either a line graph or surface plot are added to the **Model Builder**. No new dataset or plot group is created unless the generated dataset or plot groups are deleted or disabled. See below for exceptions. The COMSOL software chooses the default coordinates for the cross section as a vertical line intersecting the data in the middle.

!	It is important to ensure the areas of the geometry selected contain data when defining the line or plane. When lines or planes are changed, the coordinates and calculations are automatically updated in the dataset and in the final plot.

Deleting and Disabling Datasets and Plot Groups

The following exceptions apply to the datasets and plot groups that are automatically added using the cross-section toolbar.

- If a plot group is *disabled*, no new dataset or plot group is created even if you click one of the interactive buttons. You need to enable the plot group to regenerate the cross-section plot.
- If a plot group is *deleted*, click one of the interactive buttons to regenerate the plot group using the cut plane or cut line dataset.
- If a dataset is *deleted*, and it is used with a plot group, the plot group is also deleted at the same time. However, if the plot group is using another dataset, it is not deleted.
- If a dataset is *disabled*, the associated plot group is not disabled. However, if you want to plot another cross section, click one of the interactive buttons to create a new dataset to use with the plot group.

1D, 2D, and 3D Cross-Section Point Plots

CREATING A 1D CROSS-SECTION PLOT USING A CUT POINT DATASET

A 1D cross-section point plot visualizes a quantity in one or several points in time, along a parameter range, or for several different eigenvalues.

1 Create a **Cut Point 1D** dataset.

Under **Point Data**, enter the **x**-coordinates for the plot. Enter one or several space-separated values or a vector of coordinates, for example, `range(0,10,100)`.

2 Add a **1D Plot Group** ( ). In the **Settings** window, select **Cut Point 1D** as the **Dataset**. If required, right-click and **Rename** the plot group, for example, **Cross-Section-1D Point**.

3 Add a **Point Graph** to this 1D plot group and select **Cut Point 1D** as the **Dataset** or **From parent** (the default) to use the same dataset as the plot group to which it belongs.

4 Continue to define the **Point Graph** as needed.

5 Click the **Plot** button ( ), right-click the node, and select **Plot**, or press F8.

CREATING A 2D CROSS-SECTION PLOT USING A CUT POINT DATASET

The 2D point cross-section plot visualizes a quantity in one or several points in time, along a parameter range, or for several eigenvalues. This example uses the *Stresses in a Pulley* model from the COMSOL Multiphysics Applications Libraries.

1 Create a **Cut Point 2D** dataset. Under **Point Data**, enter the x- and y-coordinate values for the plot. Enter the same number of space-separated values in the **x** and **y** fields. Alternatively, enter a vector of coordinates; for example, `range(0,10,100)`.

2 Add a **1D Plot Group** ( ). In the **Settings** window, select **Cut Point 2D** as the **Dataset**.

3 Add a **Point Graph** and select **Cut Point 2D** as the **Dataset** or **From parent** to use the same dataset as the plot group to which it belongs.

- The x-axis corresponds to time, parameter values, or the eigenvalue number.
- The settings in the **y-axis data** area determine the quantity on the y-axis. Select from predefined quantities or enter an expression that contains variables.

4 Continue to define the **Point Graph** as needed.

5 Click the **Plot** button ( ), right-click the node, and select **Plot**, or press F8.

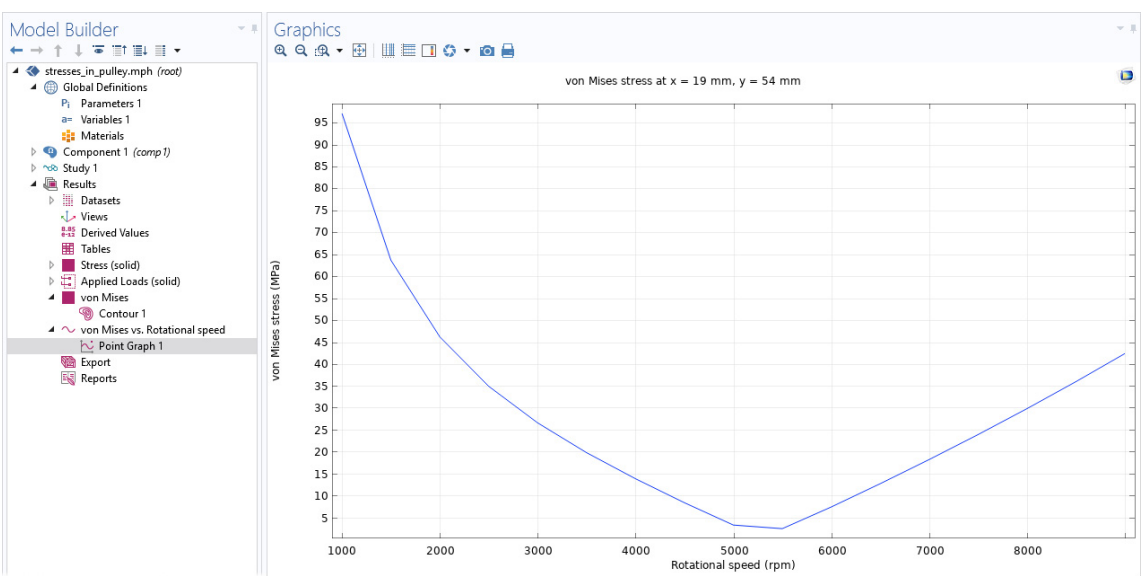

CREATING A 3D CROSS-SECTION PLOT USING A CUT POINT DATASET

A 3D point cross-section plot visualizes a quantity in one or several points in time, along a parameter range, or for several eigenvalues. This example uses the *Star-Shaped Microchannel Chip* model from the Microfluidics Module Applications Library.

1 Create a **Cut Point 3D** dataset. Under **Point Data**, enter the x-, y-, and z-coordinate values for the plot. Enter the same number of space-separated values in the **x**, **y**, and **z** fields. Alternatively, enter a vector of coordinates; for example, `range(0,10,100)`.

2 Add a **1D Plot Group** ( ). In the **Settings** window, select **Cut Point 3D** as the **Dataset**. Click the **Go to Source** button ( ) to move to the node to which the selection in the list next to the button refers.

3 Add a **Point Graph** and select **Cut Point 3D** as the **Dataset** or **From parent** to use the same dataset as the plot group to which it belongs. Click the **Go to Source** button ( ) to move to the node to which the selection in the list next to the button refers.

- The x-axis corresponds to time, parameter values, or the eigenvalue number.
- The settings in the **y-axis data** area determine the quantity on the y-axis. Select from predefined quantities or enter an expression that contains variables.

4 Continue to define the **Point Graph** as needed.

5 Click the **Plot** button ( ), right-click the node, and select **Plot**, or press F8.

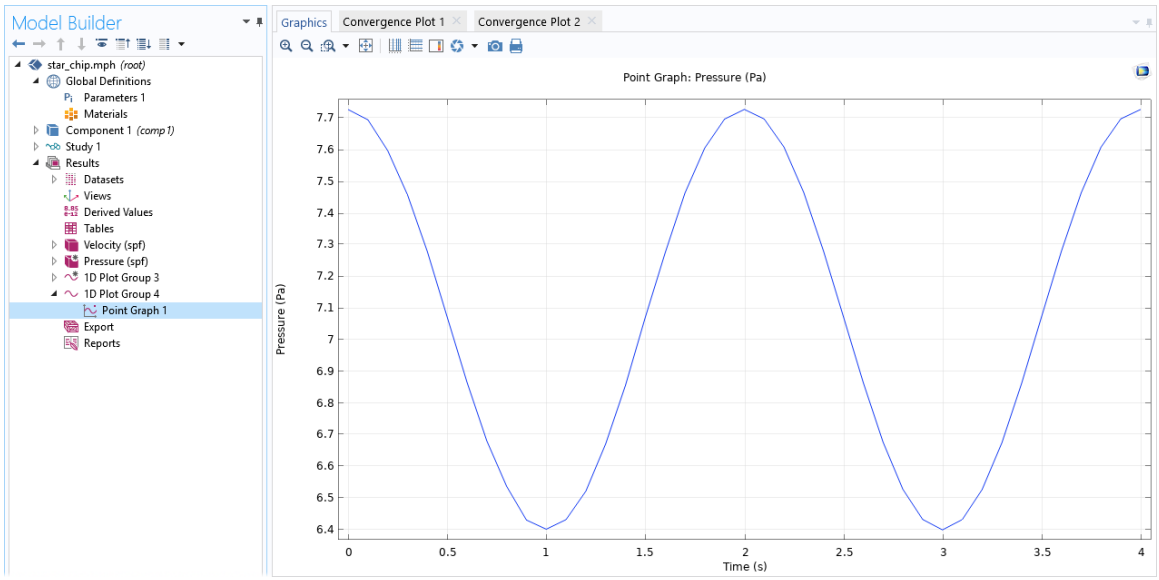

- Plot Groups and Plots
- See Table 21-10 for links to all the plots.

2D Cross-Section Line Plots

The 2D line cross-section plot visualizes a quantity in one or several lines in time, along a parameter range, or for several eigenvalues.

CREATING A 2D CROSS-SECTION PLOT USING A CUT LINE DATASET

1 Create a **Cut Line 2D** dataset.

- Enter the 2D coordinates for the plot. Set the starting point and endpoint of the line under **x** and **y**, for Point 1 and Point 2.
- Select the **Additional parallel lines** check box to visualize on a set of parallel lines. Enter the **Distances** from the line as space-separated values.

2 Add a **1D Plot Group** ( ). In the **Settings** window, select **Cut Line 2D** as the **Dataset**.

3 Add a **Line Graph** and keep **From parent** to use the same dataset as the plot group to which it belongs. Settings under **y-Axis Data** and **x-Axis Data** determine the quantity on those axes.

4 Continue to define the **Line Graph** as needed.

5 Click the **Plot** button ( ), right-click the node, and select **Plot**, or press F8.

CREATING INTERACTIVE 2D CROSS-SECTION LINE PLOTS

1 In the **Model Builder**, click a **2D Plot Group** node to display the buttons available in the **Plot** toolbar.

2 On the **Plot Group** contextual toolbar, click the **First Point for Cut Line** button ( ). Click a starting point on the geometry. COMSOL Multiphysics chooses default coordinates as a vertical line intersecting the data in the middle.

3 Click the **Second Point for Cut Line** button ( ). Click an endpoint on the geometry.

A line connecting the two points is displayed in the **Graphics** window. The first time the cross-section toolbar buttons are clicked, a **Cut Line 2D** dataset and a **1D Plot Group** with a **Line Graph** are added to the **Model Builder**.

4 Adjust the cut line as needed by clicking the buttons, then click the geometry to change where the first and second point start and end (respectively). The coordinates are updated automatically in the dataset and plot group. Click the **1D Plot Group** node to view the updates to the line graph.

5 Continue adjusting the cut line until the line graph representing the points plots the data as needed.

- See Table 21-10 for links to all the plots.
- Results Toolbar and Plot Group Contextual Toolbar
- Plot Group Contextual Toolbar

3D Cross-Section Line Plots

A 3D line/extrusion cross-section plot visualizes a quantity in one or several lines in time, along a parameter range, or for several eigenvalues. This example uses the *Prestressed Micromirror* model from the MEMS Module Applications Libraries.

CREATING A 3D CROSS-SECTION PLOT USING A CUT LINE DATASET

1 Create a **Cut Line 3D** dataset. Enter the 3D coordinates for the plot. Set the starting point and endpoint of the line under **x**, **y**, and **z** for **Point 1** and **Point 2**.

2 Click the **Plot** button ( ).

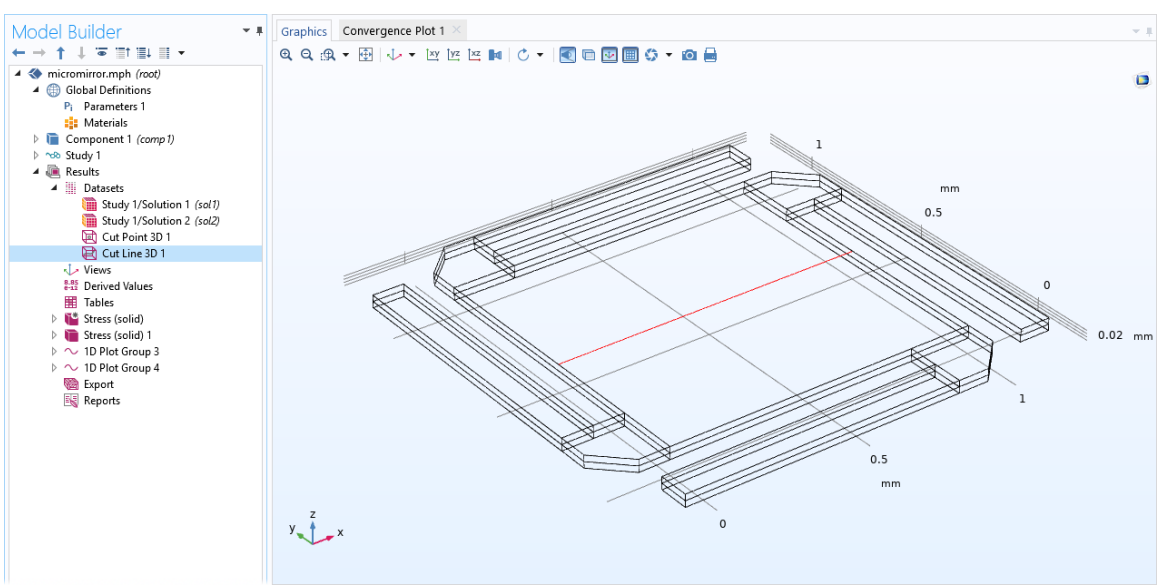

3 Add a **1D Plot Group** ( ). In the **Settings** window, select **Cut Line 3D** as the **Dataset**.

4 Add a **Line Graph**. For the dataset, **From parent** uses the same dataset as the plot group to which it belongs. Settings under **y-Axis Data** and **x-Axis Data** determine the quantity on those axes.

5 Continue to define the **Line Graph** as needed. See Line Graph.

6 Click the **Plot** button ( ), right-click the node, and select **Plot**, or press F8.

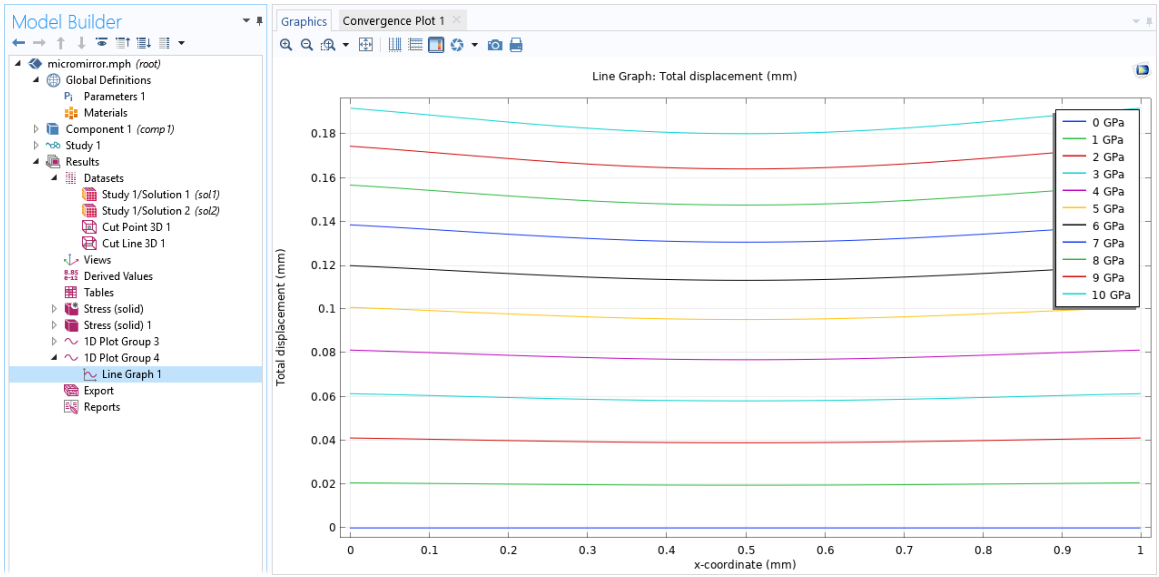

CREATING INTERACTIVE 3D CROSS-SECTION LINE PLOTS

1 In the **Model Builder**, click a **3D Plot Group** node to display the buttons available on the **Plot Group** contextual toolbar. In the main toolbar, click the cross-section buttons as needed.

The first time the cross-section toolbar buttons are clicked, a **Cut Line 3D** dataset and a **1D Plot Group** with a **Line Graph** are added to the **Model Builder**.

Define a Cut Line:

a On the **Plot Group** contextual toolbar, click the **First Point for Cut Line** button ( ). Click a starting point on the geometry. COMSOL Multiphysics chooses default coordinates as a vertical line intersecting the data in the middle.

b Click the **Second Point for Cut Line** button ( ). Click an endpoint on the geometry. A line connecting the two points is created in the **Graphics** window.

c Click either of the buttons, and then click on the geometry to change the starting point and endpoint, respectively.

d Click the **1D Plot Group** to view the **Line Graph** based on the selected points.

Define a Cut Line — Direction:

a On the **Plot Group** contextual toolbar, click the **Cut Line Direction** button ( ).

b Click on the geometry to add a line perpendicular to where you clicked. COMSOL Multiphysics chooses default coordinates as a vertical line intersecting the data in the middle.

c Click the **1D Plot Group** node to view the **Line Graph** based on the selected points.

Define a Cut Line — Surface Normal:

a On the **Plot Group** contextual toolbar, click the **Cut Line Surface Normal** button ( ).

b Click on the geometry to add a line with a point and direction. COMSOL Multiphysics chooses default coordinates as a vertical line intersecting the data in the middle.

c Click the **1D Plot Group** node to view the **Line Graph** based on the selected points.

2 Adjust the cut line as needed by clicking the buttons, then clicking the geometry to change its coordinates. The dataset and plot group are updated automatically with the cut line data. Click the **1D Plot Group** node to view the updates to the line graph.

3 Continue adjusting the cut line until the line graph representing the points plots the data as needed.

	• See Table 21-10 for links to all the plots. • Results Toolbar and Plot Group Contextual Toolbar • Plot Group Contextual Toolbar

3D Cross-Section Surface Plot

3D CROSS-SECTION SURFACE PLOT USING A CUT PLANE DATASET

A 3D surface cross-section plot visualizes a quantity in one or several planes in time, along a parameter range, or for several eigenvalues. This example uses the *Airflow Over an Ahmed Body* model from the CFD Module Applications Libraries.

1 Create a **Cut Plane 3D** dataset.

2 Add a **2D Plot Group** ( ). In the **Settings** window, select **Cut Plane 3D** as the **Dataset**.

3 Add a **Surface** plot and keep **From parent** to use the same dataset as the plot group to which it belongs.

4 Continue to define the **Surface** plot as needed.

5 Click the **Plot** button ( ), or right-click the node and select **Plot**.

The plot displays in the window selected in the **Plot window** list. To plot results in another window, right-click the plot group node or the plot node and select a plot window from the **Plot In** submenu.

CREATING INTERACTIVE 3D CROSS-SECTION SURFACE PLOTS

1 In the **Model Builder**, click a **3D Plot Group** node to display the buttons available on the **Plot Group** contextual toolbar. In the main toolbar, click the cross-section buttons as needed.

The first time the cross-section toolbar buttons are clicked, a **Cut Plane 3D** dataset and a **2D Plot Group** with a **Surface** plot are added to the **Model Builder**.

To define a Cut Plane:

a Click the **First Point for Cut Plane Normal** button ( ). Click a starting point on the geometry. The COMSOL software chooses default coordinates as a vertical line intersecting the data in the middle. The green highlighted areas show you what the cut plane looks like if this first click point is selected for the surface plot.

b Click the **Second Point for Cut Plane Normal** button ( ). Click an endpoint on the geometry. The green highlighted areas show you what the cut plane looks like if this second click point is selected for the surface plot.

c Click either of the buttons and then on the geometry to change the starting point and endpoint, respectively.

d Click the **2D Plot Group** to view the **Surface** plot based on the selected points.

To define a Normal Cut Plane:

a Click the **Cut Plane Normal** button ( ).

b Click the geometry to add a plane perpendicular to the click location. COMSOL Multiphysics chooses default coordinates as a vertical line intersecting the data in the middle. The green highlighted areas show you what the plot looks like if this normal cut plane is selected for the surface plot.

c Click the **2D Plot Group** to view the **Surface** plot based on the selected points.

To Define a Normal Cut Plane from Surface:

a Click the **Cut Plane Normal from Surface** button ( ).

b Click the geometry to add a line with a point and direction starting at the click location. COMSOL Multiphysics chooses default coordinates as a vertical line intersecting the data in the middle. The green highlighted areas show you what the plot looks like if this normal from surface cut plane is selected for the surface plot.

c Click the **2D Plot Group** to view the **Surface** plot based on the selected points.

2 Adjust the cut plane as needed by clicking the buttons, then clicking the geometry to change the coordinates. The dataset and plot group are updated automatically with the cut plane data. Click the **2D Plot Group** node to view the updates to the surface plot.

3 Continue adjusting the cut plane until the surface plot representing the points plots the data as needed.

- See Table 21-10 for links to all the plots.
- Results Toolbar and Plot Group Contextual Toolbar
- Plot Group Contextual Toolbar

1D Plot Group and Polar Plot Group

1D PLOT GROUPS

Use a **1D Plot Group** ( ) to plot graphs of, for example, a value that varies with time or a frequency spectrum, using options to use FFT with a time-dependent solution. You can also use 1D plot groups to create cross-section plots for solutions in 2D and 3D models. Normally the plot axes (x-axis and y-axis) use linear scaling but, depending on the plotted data, it might be beneficial to display the graphs using a log scale on the x-axis or y-axis. From the **Graphics** window's toolbar, click the **x-Axis Log Scale** ( ) and **y-Axis Log Scale** ( ) buttons to use a log

scale on the x-axis and y-axis, respectively. If you use two y-axes, there is also a **Secondary y-Axis Log Scale** ( ) button. Click again to return to a linear scale. For a log scale on an axis, COMSOL Multiphysics tries to show values like $10^{\{\text{integer}\}}$ (for example, 10^1 or 10^{-2}); if it is not possible to show more than three ticks like $10^{\{\text{integer}\}}$, the software instead shows regular numerical values on the axis such as 1, 2, 5,10, 20, 50, 100; and finally, if these regular values are not possible to display, the axes show uniformly distributed regular values. For information about panning and zooming of graph plots in 1D Plot Groups, see Panning and Zooming in 1D Graph Plots.

You can step through time, eigenvalues or eigenfrequencies, or parameter values using the **Plot Previous** ( ) and **Plot Next** ( ) buttons at the top of the plot group nodes and their plot nodes. You can also use the F6 and F7 keyboard shortcuts to step to the previous or next solution, respectively. For a parametric sweep with multiple parameters, the buttons step through the innermost parameter only. To move to the solution associated with the first or last time, eigenvalue, or parameter value, click the **Plot First** ( ) or **Plot Last** ( ) button.

	The **Plot First**, **Plot Previous**, **Plot First**, and **Plot Last** buttons are only available for a plot using a single time, eigenvalue or eigenfrequency, or parameter value. If you select multiple times, eigenvalues or eigenfrequencies, or parameter values, those buttons are unavailable.

POLAR PLOT GROUPS

The **Polar Plot Group** node ( ) creates a graph for *polar plots*: plots of a function in polar coordinates: the radius r and the angle θ. This is useful for visualizing, for example, a radar cross section or other similar polar plots for electromagnetic or acoustic wave models. The available plot types and settings for the **Polar Plot Group** node are similar to those for the 1D Plot Group.

DATA

Select a **Dataset**. Depending on the type of data, also specify, for example, the time, frequency, or eigenvalue selection. You can also select parameters from parametric sweeps.

Parametric Sweep Studies

For **Parametric Sweep** studies, also select an option from the **Select via** list: **Stored output times** or **Interpolated times**.

- If **Stored output times** is selected, the **Times** section is auto-filled with information from the selected **Dataset**.
- If **Interpolated times** is selected, enter **Times**.

Load Cases

For some solution **Datasets,** you can select the **Load case** to use in the plot group (if any load cases exist).

Solution Datasets

For some Solution datasets, select a **Parameter selection (freq)**: **All**, **First**, **Last**, **From list**, or **Manual**.

- If **From list** is selected, select the **Parameter values** from the box that displays.
- If **Manual** is selected, enter **Parameter indices (1-91)** (the actual indices depend on the number of solutions). Or click the **Range** button ( ) to define an **Integer Range**.

SAVE DATA IN THE MODEL

Select **Save plot data** to save the plot data in the model. This section only appears for the manual setting of the option for saving plot data. See Saving Plot Data in the Model.

TITLE

The **Title type** is automatically generated by default (the **Automatic** option). Select **Custom**, **Manual**, or **None** as needed. See Plot Titles for Plot Groups and Plot Types for more information.

From the **Color** list, choose **Custom** to define a custom color for the title, or choose one of the predefined colors (the default is **Black**).

PLOT SETTINGS

Manually enter axis labels by selecting the **x-axis label** and **y-axis label** check boxes for 1D plot groups.

If you have more than one plot in the plot group, you can use two *y*-axes. Select the **Two y-axes** check box to add a secondary *y*-axis to the right of the plot. Then you can also select the **Secondary y-axis label** check box to add a label for that *y*-axis in the associated text field. At the bottom of this section, a list of all graph plot and annotation nodes under this plot group that can use the secondary *y*-axis appears. In the **Plot on secondary y-axis** column, select the check boxes for the plots and annotations that you want to plot on the secondary *y*-axis. You can also specify that a plot should use the secondary *y*-axis in each plot's **Settings** window's **y-Axis** section, where you can select or clear the **Plot on secondary y-axis** check box.

If the plot data for two plots have the same *x*-axis data range and the same slope of the *y* data, the plots will overlap when plotting them on two *y*-axes. The following workarounds are available to avoid that one plot hides the other:

- Use another line style for one or both of the overlapping plots. For example, use different line styles (dotted, dashed, or dash-dot) or different line markers.
- Change the axis limits in the 1D Plot Group setting for one of the axis to shift it a bit in the *y* direction.

Select the **Flip the x- and y-axes** check box in cases where flipping the data for the axes may provide a better visualization. Switching the data also switches the axis labels if they are not specified manually.

AXIS

Select the **Manual axis limits** check box to edit the limits already assigned based on the dataset. For 1D plot groups, this is for the **x minimum**, **x maximum**, **y minimum**, and **y maximum.** If the plot uses two *y*-axes, you can also specify the **Secondary y minimum** and **Secondary y maximum.** For Polar Plot Groups, this is for the **r minimum** and **r maximum**. Additionally, for Polar Plot Groups, the following settings are available:

- Select the **Symmetric angle range** check box if you want the plot to display angles as +-180 degrees around zero instead as a full 360 degree revolution.
- From the **Zero angle** list, choose **Right** (the default), **Up**, **Left**, or **Down** to specify the direction of the zero angle.
- From the **Angular unit** list, choose **Degrees** (the default) or **Radians**.
- From the **Rotation direction** list, choose **Counterclockwise** (the default) or **Clockwise** to specify the direction in which the angle increases.

For the 1D Plot Group, and as needed, select the following check boxes: **Preserve aspect ratio**, **x-axis log scale**, and **y-axis log scale**. If the plot uses two *y*-axes, you can also select the **Secondary y-axis log scale** check box**.** Select the **Preserve aspect ratio** check box to preserve aspect ratio and keep the distances on the *x*-axis and *y*-axis equal. The second part is not possible to achieve if one of the *y*-axes uses a log scale. However, the first part stays active; that is, if you zoom on one of the axes, all of the axes will be equally transformed (scaled).

GRID

Clear the **Show grid** check box if you do not want to include a grid in the plot.

Select the **Manual spacing** check box to edit the fields. For 1D plot groups, this is for the **x spacing** and **y spacing** fields**.** For Polar Plot Groups, this is for the **r spacing** and θ **spacing** (SI unit: degrees) fields.

For 1D plot groups, also specify extra grid points on the x-axis and y-axis in the **Extra x** and **Extra y** fields. If the plot uses two y-axes, you can also add extra grid points for the secondary y-axis in the **Secondary extra y** field. For Polar plot groups, this is for the **Extra** θ and **Extra r** fields.

LEGEND

Select the **Show legends** check box to display legends for the quantities in the graph and, if using a **Color Expression** subnode, color legends. For color legends, select or clear the **Show maximum and minimum values** check box to show or hide those values from the top and bottom of the color legends (for 1D plots, this check box is only useful if you have added a **Color Expression** subnode to plot some quality using colors). Specify the position of the graph legends for the plots in the plot group. From the **Position** list, select **Upper right** (the default), **Upper middle**, **Upper left**, **Middle right**, **Center**, **Middle left**, **Lower right**, **Lower middle**, **Lower left**, or **Manual**. If you choose **Manual**, define the relative position (0–1) in the **x-position** and **y-position** fields. Legends in all plots in the plot group use this position.

NUMBER FORMAT

In this section you can override the automatic formatting of the numbers used on the axes of the grid:

Axis Formats

To override the automatic formatting of the numbers on the axes, select the **Manual axis settings** check box. Then adjust the formatting using the following settings:

From the **Notation** list, choose **Automatic** to let the program choose decimal notation or scientific notation (E-notation) depending on the values of the displayed numbers. Choose **Scientific** to only use scientific notation.

Select the **Use common exponent** check box (selected by default) to use a common exponent at the end of each axis. Clear this check box to instead display the full numbers, including the exponents, next to the corresponding axis tick. One of these formats may be better suited to display the axes if the plot window is small, for example.

Select the **Show trailing exponent** check box to display all numbers based on the precision used, including trailing zeros (for example, 5 is then displayed as 5.000 when the precision is set to 4).

In the **Precision** field, enter a positive integer (default: 4) for the numerical precision (number of digits displayed).

WINDOW SETTINGS

Select a **Plot window**. The **Graphics** window is the default, but any other plot window can be selected, or select **New window** to plot in a new window. Select the **Window title** check box to enter a custom title (except for the **Graphics** window), which is then available in the **Plot window** list for all models. Click the **Add Plot Window** button (+) to add a plot window to the list of available windows.

INTERACTIVE (1D PLOT GROUP)

Use a combination of datasets and plots to create a cross-section point plot and cross-section line plot. To add plots to a group, right-click the **1D Plot Group** node to select as many as needed. Each plot group can have several plots combined to create a meaningful representation of the data.

	You can adjust the default precision settings for the axis labels if required. Open The Preferences Dialog Box and click **Graphics and Plot Windows**. Under **Display format (number of digits)** in the **Graph** field, enter an integer between 1 and 15 for the number of digits for the values on the axes in 1D plots and graphs. The default setting is 5 digits.

- Plot Groups and Plots
- Results Toolbar and Plot Group Contextual Toolbar
- See Table 21-10 for a summary of all the available plot types, including links to each plot described in this guide.

Smith Plot Group

The **Smith Plot Group** node ( ) creates a graph for *Smith plots*, where electromagnetic properties are plotted on the complex reflection coefficient plane. Typically, the plotted values are the normalized reflection, impedance, or admittance. The complex-valued reflection coefficient Γ for an impedance Z_L attached to a transmission line is defined as

$$\Gamma = \frac{Z_L - Z_0}{Z_L + Z_0}$$

where Z_0 is the characteristic impedance. Physically, Γ must have an absolute value of at most 1, and it can therefore be plotted in the complex unit circle. The normalized input impedance z_L is defined as

$$z_L = \frac{1+\Gamma}{1-\Gamma}$$

For a passive circuit (no gain), it holds that $|\Gamma| \leq 1$ and that $\mathrm{Re}(z_L) \geq 0$. Thus the relation between Γ and z_L defines a conformal mapping between the unit circle and the right half of the complex plane. An impedance Smith plot is the unit circle with grid lines for $\mathrm{Re}(z_L)$ = constant and $\mathrm{Im}(z_L)$ = constant for impedance coordinates. The admittance is defined as $Y = 1/Z$, and similarly you then have $Y_0 = 1/Z_0$ and $y_L = Y/Y_0$. Consequently,

$$z_L = \frac{1-\Gamma}{1+\Gamma}$$

is useful to display as an admittance Smith plot with grid lines for $\mathrm{Re}(z_L)$ = constant and $\mathrm{Im}(z_L)$ = constant for admittance coordinates.

You can click anywhere inside the perimeter of the Smith plot's coordinates to get the numerical values for the reflection, impedance, or admittance in a **Smith evaluation** table window.

It is not possible to zoom or pan in a plot window that displays a Smith plot. In most respects, it otherwise behaves and have settings similar to a 1D Plot Group, with some differences according to the descriptions below for the available sections of the **Settings** window for a **Smith Plot Group**.

The available plot types for the Smith Plot Group are Reflection Graph, Impedance Graph, Admittance Graph, and Table Graph.

The Smith Plot Group requires a license for the AC/DC Module, MEMS Module, RF Module, or Plasma Module.

The time-related settings only display for time-dependent models.

DATA

Select a **Dataset**. Depending on the type of data, also specify, for example, the time, frequency, or eigenvalue selection.

Parametric Sweep Studies

For **Parametric Sweep** studies, also select an option from the **Select via** list: **Stored output times** or **Interpolated times**.

- If **Stored output times** is selected, the **Times** section is auto-filled with information from the selected **Dataset**.
- If **Interpolated times** is selected, enter **Times**.

Load Cases

For some Solution datasets, you can select the **Load case** to use in the plot group (if any load cases exist).

Solution Datasets

For some Solution datasets, select a **Parameter selection (freq)**: **All**, **First**, **Last**, **From list**, or **Manual**.

- If **From list** is selected, select the **Parameter values** from the box that displays.
- If **Manual** is selected, enter **Parameter indices (1-91)** (the actual indices depend on the number of solutions). Or click the **Range** button ( ) to define an **Integer Range**.

SAVE DATA IN THE MODEL

Select **Save plot data** to save the plot data in the model. This section only appears for the manual setting of the option for saving plot data. See Saving Plot Data in the Model.

TITLE

The **Title type** is automatically generated by default (the **Automatic** option). Select **Custom**, **Manual**, or **None** as needed. See Plot Titles for Plot Groups and Plot Types for more information.

From the **Color** list, choose **Custom** to define a custom color for the title, or choose one of the predefined colors (the default is **Black**).

PLOT SETTINGS

Manually enter axis labels by selecting the **x-axis label** and **y-axis label** check boxes for 1D plot groups.

AXIS

Select the **Manual axis limits** check box to edit the limits already assigned based on the dataset. For 1D plot groups, this is for the **x minimum**, **x maximum**, **y minimum**, and **y maximum.** For Polar Plot Groups, this is for the **r minimum** and **r maximum**.

For the 1D Plot Group, and as needed, select the following check boxes: **Preserve aspect ratio**, **x-axis log scale**, and **y-axis log scale**. Select the **Preserve aspect ratio** check box to keep the distances on the x-axis and y-axis equal.

GRID

- Select the **Impedance coordinates** check box to create a grid for an impedance Smith plot.
- Select the **Admittance coordinates** check box to create a grid for an admittance Smith plot.

Although it is possible to use both sets of coordinates for the grid, you typically only select on the check boxes for either an impedance or an admittance Smith plot.

From the **Resolution** list, select a resolution for the grid: **Fine**, **Normal** (the default), or **Coarse**.

LEGEND

Select the **Show legends** check box to display legends for the quantities in the graph and, if using a **Color Expression** subnode, color legends. For color legends, select or clear the **Show maximum and minimum values** check box to show or hide those values from the top and bottom of the color legends. Specify the position of the graph legends for the plots in the plot group. From the **Position** list, select **Upper right** (the default), **Upper middle**, **Upper left**, **Middle right**, **Center**, **Middle left**, **Lower right**, **Lower middle**, or **Lower left**. Legends in all plots in the plot group use this position.

NUMBER FORMAT

In this section you can override the automatic formatting of the numbers used on the axes of the grid:

Axis Formats

To override the automatic formatting of the numbers on the axes, select the **Manual axis settings** check box. Then adjust the formatting using the following settings:

From the **Notation** list, choose **Automatic** to let the program choose decimal notation or scientific notation (E-notation) depending on the values of the displayed numbers. Choose **Scientific** to only use scientific notation.

Select the **Use common exponent** check box (selected by default) to use a common exponent at the end of each axis. Clear this check box to instead display the full numbers, including the exponents, next to the corresponding axis tick. One of these formats may be better suited to display the axes if the plot window is small, for example.

Select the **Show trailing exponent** check box to display all numbers based on the precision used, including trailing zeros (for example, 5 is then displayed as 5.000 when the precision is set to 4).

In the **Precision** field, enter a positive integer (default: 4) for the numerical precision (number of digits displayed).

WINDOW SETTINGS

Select a **Plot window**. The **Graphics** window is the default, but any other plot window can be selected, or select **New window** to plot in a new window. Select the **Window title** check box to enter a custom title (except for the **Graphics** window), which is then available in the **Plot window** list for all models. Click the **Add Plot Window** button (+) to add a plot window to the list of available windows.

2D Plot Group and 3D Plot Group

Use a **2D Plot Group** (■) to combine one or more 2D plots, such as surface plots and contour plots, and visualize the plots simultaneously. Use a **3D Plot Group** ( ) to combine one of more 3D plots, such as volume plots and slice plots, into one to visualize the plots simultaneously. The datasets that you can use are solution datasets for 2D and 3D solutions, respectively, but also, for example, cut planes from a 3D model in a 2D plot group or a revolved 2D axisymmetric solution in a 3D plot group.

	The time-related settings only display for time-dependent models.

DATA

Select a **Dataset**. From the lists below select the solution to use. For **Parametric Sweep** studies, select, for example, a **Parameter value** as needed. For time-dependent problems, select a **Time**. For eigenvalue and eigenfrequency analyses, select an **Eigenvalue** or **Eigenfrequency**. For solutions that contain multiple eigenvalues, the list includes entries such as **3241 (1)** and **3241 (2)** for selecting either of the two eigenmodes associated with the same eigenvalue. You can step through time, eigenvalues or eigenfrequencies, or parameter values using the **Plot Previous** (←) and **Plot Next** (→) buttons at the top of the plot group nodes and their plot nodes. You can also use the F6 and F7 keyboard shortcuts to step to the previous or next solution, respectively. For a parametric sweep with multiple parameters, the buttons step through the innermost parameter only. To move to the solution associated with the first or last time, eigenvalue, or parameter value, click the **Plot First** (|←) or **Plot Last** (→|) button.

SELECTION

By default, the plots in the plot group are active in the entire geometry. Using a selection defined in this section, you can limit the plots to some geometric entities (parts of the geometry). From the **Geometric entity level** list, choose **Entire geometry** (the default), **Domain**, **Boundary**, **Edge** (3D only), or **Point**.

For all levels except **Entire geometry**, you can choose a selection of entities at that level from the **Selection** list:

- **Manual**, to select entities manually from the **Graphics** window or using the selection tools below.
- **All domains** (for example), to select all entities at the selected entity level.
- Any user-defined selections that are available for the selected entity level.

The following settings are also available for all levels except **Entire geometry**:

By default, the **Propagate to lower dimensions** check box is selected. If you clear it, only plots defined on the selected entity level will appear (for domains, a surface plot would then not appear, for example).

Select the **Apply to dataset edges** check box to only display dataset edges for the chosen selection of entities instead of for the entire geometry.

	The selection made in the **Settings** window for the plot group can be overridden by **Selection** subnodes for the individual plot nodes in that plot group.

SAVE DATA IN THE MODEL

Select **Save plot data** to save the plot data in the model. This section only appears for the manual setting of the option for saving plot data. See Saving Plot Data in the Model.

TITLE

The **Title type** is automatically generated by default. Select **Custom**, **Manual**, or **None** as needed. See Plot Titles for Plot Groups and Plot Types for more information.

From the **Color** list, choose **Custom** to define a custom color for the title, or choose one of the predefined colors (the default is **Black**).

PLOT SETTINGS

- Select a **View**. The default is **Automatic**, which picks a view automatically. You can also choose any applicable view that is defined under **Definitions** or under **Results>Views**. It is also possible to choose **New view**. The plot then uses that new view, which appears as a **View 2D** ( ) or **View 3D** ( ) node under **Views**.
- (2D only) The **x-axis label** and **y-axis label** check boxes are cleared by default, indicating that empty axis labels are used by default. Select the check boxes to enter labels for the x-axis and the y-axis. This can be useful for scatter plots, for example, where the axes represent quantities other than the x and y directions.
- By default, the plot does not include hidden entities (geometric entities that are hidden in the selected **View**). To include such hidden geometric entities in the plot, select the **Show hidden entities** check box. To make the hiding also apply to lower dimensions (for example, when hidden 3D domains affect faces where all adjacent domains are hidden), select the **Propagate hiding to lower dimensions** check box.
- For 2D axisymmetric plots, select the **Show symmetry axis** check box to display the symmetry axis at $r = 0$.
- The **Plot dataset edges** check box is selected by default. Click to clear if required. Otherwise, select a **Color** (**Black** is the default) or select **Custom** to click the **Color** button and choose a different color from a color palette. Select a **Frame**: **Material** (the default), **Mesh**, **Geometry frame**, or **Spatial**.

COLOR LEGEND

You can control the appearance of the color legends (color scales) for the plots for this plot group using the following settings:

To turn off the display of the color legends, clear the **Show legends** check box. If the **Show legends** check box is selected, you can control the look and feel and position of the color legend using the settings below.

You can show or hide the maximum and minimum values for the plotted quantity that appear above and below the color scale using the **Show maximum and minimum values** check box. Turning off the maximum and minimum values can save screen space in the vertical direction.

To display a unit for the values of the color legend, select the **Show units** check box. The unit appears above the color legend.

Specify the location of the color legends (color scales) for the plots for this plot group. The **Position** list contains the following positions for the color legends:

- Select **Alternating** to position the first color legend to the right of the plot, the second color legend to the left of the plot, and so on.
- Select **Bottom** to position the color legends horizontally at the bottom of the plot window.
- Select **Left** to position the color legends to the left of the plot.
- Select **Left double** to position the color legends to the left of the plot with two color legends positioned on top of each other (tiled vertically).
- Select **Right** to position the color legends to the right of the plot. This is the default position.
- Select **Right double** to position the color legends to the right of the plot with two color legends positioned on top of each other (tiled vertically).

From the **Text color** list, choose **Custom** to define a custom color for the text in the color legend, or choose one of the predefined colors (the default is **Black**).

	The default precision for the color legend labels is 5 digits. You can change the precision in the **Preferences** dialog box, using the **Color legend** field under **Display format (number of digits)** on the **Graphics and Plot Windows** page.

NUMBER FORMAT

In this section you can override the automatic formatting of the numbers used in the color legend and the axes of the grid:

Color Legend Formats

To override the automatic formatting of the numbers in the color legend, select the **Manual color legend settings** check box. Then adjust the formatting using the following settings:

From the **Notation** list, choose **Automatic** to let the program choose decimal notation or scientific notation (E-notation) depending on the values of the displayed numbers. Choose **Engineering** to use engineering notation, or choose **Scientific** to only use scientific notation.

Select the **Use common exponent** check box (selected by default) to use a common exponent above the color legend. Clear this check box to instead display the full numbers, including the exponents, next to the corresponding levels in the color legend. One of these formats may be better suited to display the color legend if the plot window is small, for example.

Select the **Show trailing exponent** check box to display all numbers based on the precision used, including trailing zeros (for example, 5 is then displayed as 5.00 when the precision is set to 3).

In the **Precision** field, enter a positive integer (default: 3) for the numerical precision (number of digits displayed).

Grid and Axis Formats

To override the automatic formatting of the numbers on the grid axes, select the **Manual axis settings** check box (2D) or **Manual grid settings** (3D). Then adjust the formatting using the following settings:

From the **Notation** list, choose **Automatic** to let the program choose decimal notation or scientific notation (E-notation) depending on the values of the displayed numbers. Choose **Engineering** to use engineering notation, or choose **Scientific** to only use scientific notation.

Select the **Use common exponent** check box (selected by default) to use a common exponent at the end of each axis. Clear this check box to instead display the full numbers, including the exponents, next to the corresponding axis tick. One of these formats may be better suited to display the grid if the plot window is small, for example.

Select the **Show trailing exponent** check box to display all numbers based on the precision used, including trailing zeros (for example, 5 is then displayed as 5.000 when the precision is set to 4).

In the **Precision** field, enter a positive integer (default: 4) for the numerical precision (number of digits displayed).

WINDOW SETTINGS

- Select a **Plot window**. The **Graphics** window is the default setting, but any other plot window can be selected, or select **New window** to plot in a new window.
- Select the **Window title** check box to enter a custom title (except for the **Graphics** window), which is then available in the **Plot window** list for all models. Click the **Add plot window** button (+) to add a plot window to the list of available windows.

INTERACTIVE

Use a combination of datasets and plots to create a cross-section point plot, cross-section line plot, or cross-section surface plot.

To add plots to a group, right-click the **3D Plot Group** or the **2D Plot Group** node to select as many as needed. Each plot group can have several plots combined to create a meaningful representation of the data.

	You can adjust the default precision settings for the axis labels if required. Open The Preferences Dialog Box and click **Graphics and Plot Windows**. Under **Display format (number of digits)**: • In the **2D axis** field, enter an integer between 1 and 15 for the number of digits for the values on the axes in 2D plots. The default setting is 4 digits. • In the **3D grid** field, enter an integer between 1 and 15 for the number of digits for the values on the axes of the grid in 3D plots. The default setting is 3 digits.

	• Plot Groups and Plots • Results Toolbar and Plot Group Contextual Toolbar See Table 21-10 for a summary of all the available plot types, including links to each plot described in this guide.

Admittance Graph

Add an **Admittance Graph** subnode ( ) to a **Smith Plot Group** node to create an admittance Smith plot. After defining the expression to plot (an S-parameter, for example), click **Plot** ( ) to create the admittance Smith plot. If you want to add color to the plotted curve (to represent the frequency, for example), add a **Color Expression** subnode.

	Go to Common Results Node Settings for links to information about these sections: **Data**, **Title**, and **Coloring and Style**.

EXPRESSIONS

For an Admittance Graph, you can plot multiple curves in the same graph (Smith plot) using varying line styles and colors. In the table in this section, add one or more expressions to the rows under **Expression** to define the quantity for each curve, and optionally add descriptions under **Description**. The descriptions appear in the legends.

For this table of expressions, the **Replace Expression** and **Add Expression** buttons have the following effect:

- Click the **Replace Expression** ( ) button to select a predefined quantity and replace the entire contents of the **Expression** table with the corresponding variable as the only expression.
- Click the **Add Expression** ( ) button to insert the corresponding variable on a new row in the **Expression** table.

Enter a reference admittance (SI unit: S) in the **Reference admittance** field.

LEGENDS

The **Show legends** check box is selected by default to display the plotted expressions to the right of the plot. In plots where each line represents a certain time value, eigenvalue, or parameter value, these values are also displayed.

When **Automatic** is selected from the **Legends** list (the default), select or clear the **Description**, **Expression**, and **Unit** check boxes to control what to include in the automatic legends (by default it includes the description only). You can also add a prefix or a suffix to the automatic legend text in the **Prefix** and **Suffix** fields. If **Manual** is selected from the **Legends** list, enter your own legend text into the table.

Annotation

Use an **Annotation** plot ( ) to add an annotation anywhere in a plot. You can add **Annotation** subnodes to any plot group by right-clicking the plot group node and selecting **Annotation**. Add a Deformation subnode if desired. If you want to use a Deformation subnode to move the annotation in accordance with some other deformed plot, typically, select the **Allow evaluation of expressions** check box so that you can use expressions to define the deformation vector and select the other plot in the **Inherit Style** section to inherit the plot style from the plot that you want the annotation to move in accordance with.

	Go to Common Results Node Settings for links to information about these sections: **Data**, **Title**, and **Inherit Style**.

Y-AXIS

This section is only available for an **Annotation** node under a **1D Plot Group** that use two y-axes. In that case, select the Plot on secondary y-axis check box to plot the annotation using the coordinates for the secondary y-axis. You can also specify the axis to use in the **Plot Settings** section in the settings for the **1D Plot Group** node.

ANNOTATION

In the **Text** field, type the text that you want to display as an annotation. If you want the annotation to also contain the position (displayed before the annotation text), select the **Prepend the position** check box.

If you want to include the value of some expression in the annotation, select the **Allow evaluation of expressions** check box. You can then type, for example, `eval(T)` to evaluate the temperature T in the annotation position, or `eval(t,min)` to evaluate the time t (in minutes). From the **Geometry level** list, you can select the geometry level fort the evaluation: **Take from dataset** (the default), **Volume** (3D only), **Surface**, **Line**, **Point**, or **Global**. Click the

Replace Expression ( ) or **Insert Expression** ( ) button to select predefined expressions to use inside of the `eval` statement.

	If you do not select the **Allow evaluation of expressions** check box, the `eval` string appears as you type it in the **Text** field.

POSITION

In the **x**, **y**, and **z** fields (for a 3D model with Cartesian coordinates; coordinate names can vary), enter the position of the annotation. If you want to evaluate an expression that is defined in the geometry, the position must be within the geometry. Click the **Add Expression** ( ) or **Replace Expression** ( ) button to select predefined expressions to use as the position of the annotation. For example, if you have added a **Mass Properties** node and created variables for the center of mass, you can choose them to place the annotation at the center of mass.

	If the selected dataset is a Cut Point dataset, the coordinates are taken as the cut point coordinates, and the **Position** section is not available.

ADVANCED

In the **Position precision** field, enter the number of digits for the display of the position in the annotation (default: 6).

In the **Expression precision** field, enter the number of digits for the display of numerical values in the annotation (default: 6).

The **Recover** default is **Off** because recovery takes processing time. To use polynomial-preserving recovery and recover fields with derivatives such as stresses or fluxes with a higher theoretical convergence than smoothing, from the **Recover** list, select **Within domains** to perform recovery inside domains or **Everywhere** to apply recovery to all domain boundaries.

COLORING AND STYLE

Select the **LaTeX markup** check box if you want to include mathematical symbols and Greek letters, for example, in the annotation. To include such symbols, surround the LaTeX syntax with `$` to indicate that the text inside of the `$` signs is LaTeX. For example, `$\alpha = \beta/\pi$` appears as $\alpha = \beta/\pi$. If the **LaTeX markup** check box is selected, you can also add line breaks as `\\`. See Mathematical Symbols and Special Characters for more information about available LaTeX symbols and characters (of which most but not all are applicable in this context).

Clear the **Show point** check box if you do not want to include a point in the plot at the location of the annotation.

From the **Color** list, choose the color to use for the annotation text; choose **Custom** to choose a custom color from a color palette. Select the frame background color from the **Background color** list.

From the **Anchor point** list, choose the position of the anchor point relative to the annotation text: **Upper right**, **Upper middle**, **Upper left** (the default), **Middle right**, **Center**, **Middle left**, **Lower right**, **Lower middle**, or **Lower left**.

From the **Orientation** list, choose **Horizontal** (the default) or **Vertical**, if you want the annotation text to be displayed vertically instead of horizontally.

Select the **Show frame** check box to display the annotation in a rectangular frame.

Annotation Data

An **Annotation Data** plot node appears in 2D and 3D ( ) plot groups if you run a method that creates an `AnnotationData` plot.

	It is not possible to add an **Annotation Data** node from the model tree or toolbars in the COMSOL Desktop. It is only available from the COMSOL Multiphysics API and if you run a method from the **Developer** toolbar. See AnnotationData in the *COMSOL Multiphysics Programming Reference Manual*.

ANNOTATION

The annotation to be displayed appears in the **Text** field.

POSITION

The position of the annotation text appears in the coordinate fields.

	Go to Common Results Node Settings for a link to information about the **Title** and **Coloring and Style** section. The **LaTeX markup** check box should be selected if the annotations include mathematical symbols and Greek letters, for example.

Arrow Data

An **Arrow Data** plot node appears in 2D ( ) and 3D ( ) plot groups if you run a method that creates a `ArrowData` plot.

	It is not possible to add a **Arrow Data** node from the model tree or toolbars in the COMSOL Desktop. It is only available from the COMSOL Multiphysics API and if you run a method from the **Developer** toolbar. See PointData in the *COMSOL Multiphysics Programming Reference Manual*.

DATA

In the **Data** section, the number of points in the data is listed.

	Go to Common Results Node Settings for a link to information about the **Title**, **Range**, and **Coloring and Style** sections.

Arrow Line

Use an **Arrow Line** plot to visualize a vector quantity as arrows on lines using a 2D **Arrow Line** ( ) plot, or lines and edges using a 3D **Arrow Line** ( ) plot. Add Deformation, Color Expression, Filter, or Selection (Plot Attribute) subnodes as needed. For example, add a **Color Expression** node to color the arrows with the magnitude of the vector quantity that the arrows represent. Right-click a **2D Plot Group** or **3D Plot Group** to add these plots.

	Go to Common Results Node Settings for links to information about these sections: **Data**, **Expression**, **Title**, **Arrow Positioning**, **Coloring and Style**, and **Inherit Style**.

Arrow Point

Use an **Arrow Point** plot to visualize a vector quantity as arrows at points using a 2D or 3D **Arrow Point** plot (or). Add Deformation, Color Expression, Filter, or Selection (Plot Attribute) subnodes as needed. For example, add a **Color Expression** node to color the arrows with the magnitude of the vector quantity that the arrows represent. Right-click a **2D Plot Group** or **3D Plot Group** to add these plots from the **More Plots** submenu.

	Go to Common Results Node Settings for links to information about these sections: **Data**, **Expression**, **Title**, **Coloring and Style**, and **Inherit Style**.

Arrow Surface

Use an **Arrow Surface** plot to visualize a vector quantity as arrows on a surface using a 2D **Arrow Surface** ( ) or 3D **Arrow Surface** ( ) plot. Add Deformation, Color Expression, Filter, or Selection (Plot Attribute) subnodes as needed. For example, add a **Color Expression** node to color the arrows with the magnitude of the vector quantity that the arrows represent. Right-click a **2D Plot Group** or **3D Plot Group** to add these plots.

	Go to Common Results Node Settings for links to information about these sections: **Data**, **Expression**, **Title**, **Arrow Positioning**, **Coloring and Style**, and **Inherit Style**. For a settings specific to Arrow Surface plots in the **Expression** section, see below.

EXPRESSION

In addition to the expressions for the components of the vector to plot using arrows, and a description for that vector, this section contains an additional setting:

From the **Components to plot** list, choose **All** (the default), **Normal**, or **Tangential** to plot the full vector or only its normal or tangential components relative to the selected surfaces.

Arrow Volume

Use an **Arrow Volume** ( ) plot visualize a vector quantity as arrows in a 3D volume. Add Deformation, Color Expression, or Filter subnodes as needed. For example, add a **Color Expression** node to color the arrows with the magnitude of the vector quantity that the arrows represent. Right-click a **3D Plot Group** to add this plot.

	Go to Common Results Node Settings for links to information about these sections: **Data**, **Expression**, **Title**, **Arrow Positioning**, **Coloring and Style**, and **Inherit Style**.

Contour (Plot)

Use a **Contour** plot to visualize a scalar quantity as a contour in 2D ( ) or 3D ( ) and display the quantity as a set of colored lines. You can also use filled contours to create a kind of a surface plot with color banding. The selected quantity has a constant value on these contour lines, optionally with a 3D height for 2D contours. Add Deformation, Color Expression, Filter, Selection (Plot Attribute), or (2D only) Height Expression subnodes as needed. Right-click a **2D Plot Group** or **3D Plot Group** to add these plots.

	Go to Common Results Node Settings for links to information about these sections: **Data**, **Expression**, **Title**, **Levels**, **Quality**, **Inherit Style**, and, except for some details below, **Coloring and Style**.

COLORING AND STYLE

Select a **Contour type**: **Line** (the default), **Filled**, or **Tube**. Using filled contours creates a plot with color banding rather than isolated contour lines or tubes when using the other contour types.

- If **Line** is selected, you can also select the **Level labels** check box to display line labels on the graph.
- If **Filled** is selected, you can also clear the **Fill surfaces outside of contour levels** check box (selected by default) to not fill the areas of the geometry's surface that are above the highest and below the lowest contour.
- If **Tube** is selected, you can enter an expression that defines the radius in the **Tube radius expression** field (default: 1). Click the **Replace Expression** button ( ) to choose a predefined expression to use for the tube radius. Click the **Radius scale factor** check box to change the default radius scale factor if you want to make the tubes thicker or thinner.

If you select to display level labels (not available for filled contours), select the **Level labels** check box and specify the precision (number of significant digits) as a positive integer in the **Precision** field (default: 4). You can also choose a color for the labels from the **Label color** list.

For coloring the contours, select one of the following options from the **Coloring** list:

- Select **Color table** (the default) to color the contours using a color table that you choose from the **Color table** list belows.
- Select **Uniform** to use a predefined uniform color, or select **Custom** to define a custom color from the colored list below (on Windows) or by clicking the **Color** button (on Linux and macOS) and then selecting a color from the color palette.
- Select **Gradient** to specify the coloring as a gradient between two colors, which you specify using the **Top color** and **Bottom color** lists.

The **Color legend** check box is selected by default. Clear it to remove the color legend. Select the **Reverse color table** or **Reverse color gradient** and **Symmetrize color range** check boxes as required.

For information about the **Legend type** list, see Legend Type.

Coordinate System Volume, Coordinate System Surface, and Coordinate System Line

Use the **Coordinate System Volume** ( ), **Coordinate System Surface** (2D and 3D), and **Coordinate System Line** (2D and 3D) plots to visualize the coordinate systems used in, for example, models of piezoelectric devices, where there can be multiple domains, each using its own set of coordinate systems. Right-click to add Deformation, Filter, or Selection (Plot Attribute) subnodes as needed. Right-click a **2D Plot Group** or **3D Plot Group** node to add these plots from the **More Plots** submenu.

	Go to Common Results Node Settings for links to information about these sections: **Data**, **Title**, **Coloring and Style**, and **Inherit Style**.

COORDINATE SYSTEM

Choose to plot a **Coordinate system** (the default) or a **Matrix variable**:

- For **Coordinate system**, choose one of the available coordinate systems from the **Coordinate system** list. The default is **None** (no coordinate system). The coordinate system directions arrows are red for the first coordinate direction's basis vector, green for the second coordinate direction's basis vector, and blue for the third coordinate direction's basis vector.
- For **Matrix variable**, click the **Replace Expression** button ( ) to select an available matrix variable from the list, which includes transformation matrices to and from the added coordinate systems and physical quantities that

are tensors, such as the thermal conductivity. The selected variable (for example, `ht.k`) then appears next to the **Matrix variable**. Each row of the matrix is plotted as a vector. The first row is plotted in red, the second row in green, and the third row, if any, in blue.

POSITIONING

This section is available for **Coordinate System Volume** and **Coordinate System Surface** (2D) plots.

In the **x grid points**, **y grid points**, and **z grid points** (3D only) fields, select an **Entry method**: **Number of points** or **Coordinates**.

- If **Number of points** is selected, enter the number of **Points** in each direction (the default is 15 for 2D Coordinate System Surface plots and 7 for 3D Coordinate System Volume plots).
- If **Coordinates** is selected, enter **Coordinates** (SI unit: m).

Directivity

The **Directivity** plot ( ) is an extension of the far-field plots and is a common acoustic plot for speakers, for example. The plot collects spatial information across frequencies and shows this information in a contour plot.

You can add **Directivity** plot nodes to 1D and 2D plot groups from the **More Plots** submenu.

	Go to Common Results Node Settings for links to information about these sections: **Data**, **Title**, **Levels**, **Range**, **Inherit Style**, and **Coloring and Style**. See below for some specific settings in the **Coloring and Style** section.

	The Directivity plot is only available with the Acoustics Module.

EXPRESSION

For the standard settings, see Expressions and Predefined Quantities. You can also choose a normalization of the data from the **Normalization** list:

- Choose **With respect to angle** (the default) to compute an expression with the level normalized with respect to the value at a specific angle. You specify the angle (in degrees) in the **Angle** field (unit: deg).
- Choose **With respect to maximum** to compute the expression normalized with respect to its maximum level value for each frequency.
- Choose **None** to not use any normalization.

EVALUATION

Under **Angles**, enter the **Number of angles**. The default is 50.

Select a **Restriction**: **None** (the default) or **Manual**.

If **Manual** is selected, enter values (SI unit: deg) for:

- φ **start** (the default is 0 degrees).
- φ **range** (the default is 360 degrees). Typically the range will be 180 degrees to evaluate the directivity in the half space in front of a speaker.

The following settings only appear if there is a physics interface in the model that makes use of them. Under **Center**, enter values for the coordinates at the center of the evaluation circle. Under **Normal**, enter the coordinates of the normal defining the evaluation plane. Under **Evaluation distance**, enter a **Radius** for the evaluation; the default is 1

m as usually used for these plots. Under **Reference direction**, specify the coordinates of the vector that specifics the direction representing 0 degrees in the plot. The entered vector is projected onto the evaluation plane. A schematic of the evaluation circle is given in Figure 21-5 below.

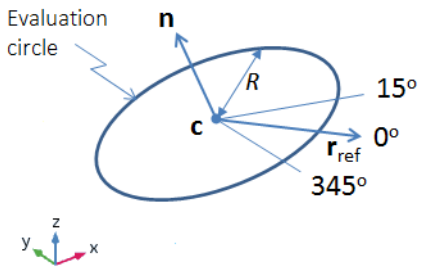

Figure 21-5: Schematic of the evaluation circle used in the Directivity and Radiation Pattern plots, showing the circle center **c**, *evaluation plane normal* **n**, *evaluation radius* R, *and reference direction* $\mathbf{r}_{\text{ref}}$.

In 3D and 2D axisymmetric models, you can preview the evaluation plane, including circle, normal, and reference direction, in the geometry by clicking the **Preview Evaluation Plane** button at the bottom of the **Evaluation** section. An example of the resulting plot is depicted in Figure 21-6 below.

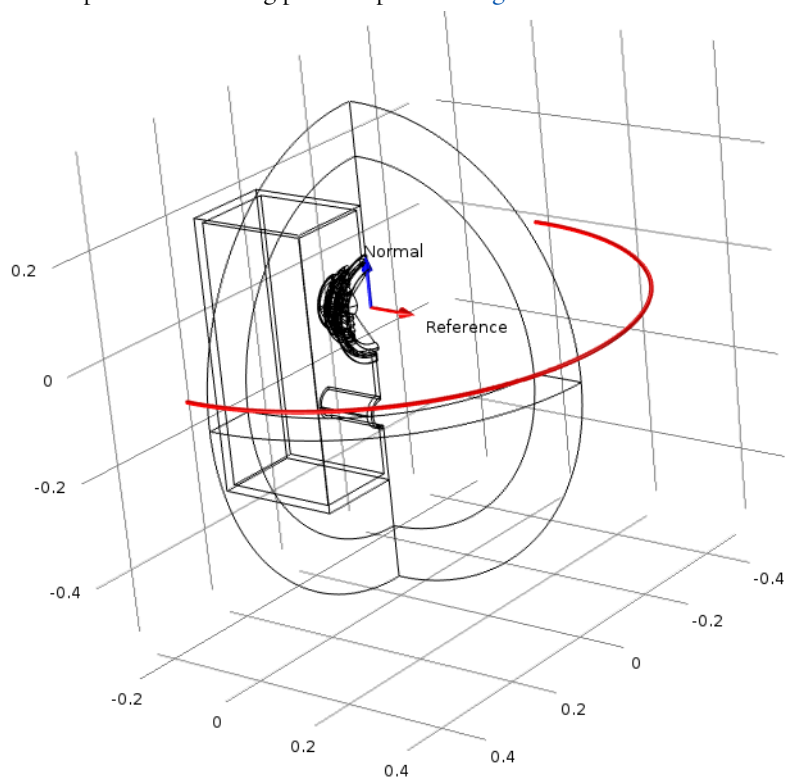

Figure 21-6: Preview plot of the evaluation circle used in the directivity plot for the Vented Loudspeaker Enclosure model from the Acoustics Module Application Gallery.

COLORING AND STYLE

In addition to common coloring and style settings, you can specify the axis and scale for the frequency and the contour type.

From the **Layout** list, choose:

- **Frequency on x-axis** to plot with the frequency on the x-axis.
- **Frequency on y-axis** to plot with the frequency on the y-axis.

From the **Frequency scale** list (2D only), choose:

- **Logarithmic** (the default) to plot the frequency using a logarithmic scale.
- **Linear** to plot the frequency using a linear scale.

Select a **Contour type**: **Line** or **Filled** (the default). Using filled contours creates a plot with color banding rather than isolated contour lines.

- If **Line** is selected, you can also select the **Level labels** check box to display line labels on the graph in 2D or specify a line width in the **Width** field (default: 1) in 1D.
- If **Filled** is selected, you can also clear the **Fill surfaces outside of contour levels** check box (selected by default) to not fill the areas of the geometry's surface that are above the highest and below the lowest contour.

Global

Use a **Global** ( ) plot to graph a scalar quantity as a function of time or a parameter. Add a Color Expression or Filter subnode as needed. Right-click a **1D Plot Group** or **Polar Plot Group** to add this plot type.

	Go to Common Results Node Settings for links to information about these sections: **Data**, **Title**, and **Coloring and Style**. Also see the section Expressions and Predefined Quantities.

Y-AXIS

	This section is only available if the **Two y-axes** check box is selected in the **Plot Settings** section of the parent **1D Plot Group** node's **Settings** window.

Select the **Plot on secondary y-axis** check box to plot the y-axis data on the secondary y-axis to the right of the plot instead of the primary y-axis to the left of the plot.

Y-AXIS DATA (1D PLOTS) OR R-AXIS DATA (POLAR PLOTS)

For a Global plot, you can plot multiple curves in the same graph using varying line styles and colors. In the table in this section, add one or more expressions to the rows under **Expression** to define the quantity on the y-axis for each curve, and optionally add descriptions under **Description**. The descriptions appear in the legends.

For this table of expressions, the **Replace Expression** and **Add Expression** buttons have the following effect:

- Click the **Replace Expression** ( ) button to select a predefined quantity and replace the entire contents of the **Expression** table with the corresponding variable as the only expression.
- Click the **Add Expression** ( ) button to insert the corresponding variable on a new row in the **Expression** table.

X-AXIS DATA (1D PLOTS) OR θ ANGLE DATA (POLAR PLOTS)

From the **Parameter** list, select an option for what the x-axis represents: **Solution number**, **Frequency spectrum**, **Phase**, or **Expression**. For **Parametric Sweep** studies, and when there are multiple inner solutions, **Parameter value** and **Time** are also available. Select:

- **Solution number** to use the solution numbers as the x-axis data (or θ angle data for polar plots) for an eigenvalue solution or for a parametric solution with more than one parameter.

- **Frequency spectrum** to have COMSOL Multiphysics compute the number of frequencies and the frequency range based on the FFT (fast Fourier transform) of the time-dependent solution. The frequency spectrum code assumes that the time range selected in the plot is a whole number of periods of a periodic function. (The transform is valid for all functions, but what you get corresponds to a periodic continuation of the function outside the chosen time range.)
  - To specify these values manually, select the **Number of frequencies** check box and enter a value in the associated field (the default is based on the number of time samples), or
  - Select the **Frequency range** check box and then enter the bounds of the frequency range in the **Minimum** and **Maximum** fields (in Hz). The FFT algorithm uses resampling based on linear interpolation. The x-axis shows the frequency (in Hz). By default, the y-axis shows the unscaled Fourier coefficients.
  - Select the **Scale** check box to scale the values on the y-axis so that their magnitude reflects the magnitude of the original signal. The values then have the same unit as the input data for the FFT. The y-axis title includes the unit if all expressions represented on the y-axis have the same unit. The scaling makes the magnitude at 0 Hz equal to the bias or DC component of the original signal. For a pure sinusoid, the scaled value is the peak magnitude divided by the square root of 2 ($u_{\max}/\sqrt{2}$).
- **Phase** to specify a range of phase angles for the x-axis data. The default for the **Phase** is `range(0,0.5,2*pi)` (0–360 degrees in steps of 0.5 rad). Select a **Unit** for the phase angle.
- **Parameter value** to use the x-axis data (or θ angle data for polar plots) stored in the solution for a parametric solution with a single parameter.
- **Time** to use time as the x-axis data (or θ angle data for polar plots) for a time-dependent solution.

Parametric Sweep Studies

Under **x-Axis Data** (θ **Angle Data** for polar plots), for **Parametric Sweep** studies, and when there are multiple inner solutions, select an option from the **Solutions** list: **Inner** or **Outer**.

- If **Inner** is selected, and for time-dependent studies, the **Times** steps are plotted on the x-axis and one line per parameter is included in the graph (as listed in the **Data>Parameter values** section on this page).
- If **Outer** is selected, one line in the graph is plotted for each inner solution and the **Parameter values** are plotted on the x-axis.

	One example is a time-dependent problem with a geometric parametric sweep. The time steps are the inner solutions, the parameter sweep, and the outer solutions.

QUALITY

This section is only available when the dataset refers to a solution using a time-dependent study. You can then increase the time resolution if needed for a smooth graph plot. In the **Refinement** list, enter an integer between 1 (the default value) and 1000. For an increased time resolution, enter a higher refinement value.

LEGENDS

The **Show legends** check box is selected by default to display the plotted expressions to the right of the plot. In plots where each line represents a certain time value, eigenvalue, or parameter value, these values are also displayed.

When **Automatic** is selected from the **Legends** list (the default), select or clear the **Description**, **Expression**, and **Unit** check boxes to control what to include in the automatic legends (by default, it includes the description only). You

can also add a prefix or a suffix to the automatic legend text in the **Prefix** and **Suffix** fields. If **Manual** is selected from the **Legends** list, enter your own legend text into the table.

	Small-Signal Analysis, Prestressed Analysis, and Harmonic Perturbation Plot Settings

Histogram

Use a **Histogram** in 1D ( ) or 2D ( ) to plot a histogram that shows how a quantity is distributed over the geometry (mesh volume). In 1D histograms, the *x*-axis in the histogram represents the values of the quantity (as a number of bins or a range of values), and the *y*-axis represents the count of the total element volume in each interval. You can also view the histogram as a plot showing the area in-between contours or isosurfaces. In 2D histograms, the *x*-axis and *y*-axis represent the values of two quantities (as a number of bins or a range of values), and the color surface represents the count of the total element volume in each "bin". The histogram can be normalized and also displayed as a cumulative plot, and it can appear as a discrete or a continuous function. You can use a histogram with settings that provide a bar chart of, for example, the distribution of values in different ranges. Right-click a **1D Plot Group** or **2D Plot Group** to add this plot. For the 2D Plot Group, select this from the **More Plots** submenu. Add a Height Expression subnode (2D only) if required.

	• Go to Common Results Node Settings for links to information about these sections: **Data**, **Expression**, **Title**, **Range**, **Coloring and Style**, and **Quality**. • For a 2D histogram based on a precomputed matrix of data, see Matrix Histogram.

	2D Histogram plots require a license for the Particle Tracing Module, Ray Optics Module, or Acoustics Module.

Y-AXIS

	This section is only available for 1D **Histogram** plots and if the **Two y-axes** check box is selected in the **Plot Settings** section of the parent **1D Plot Group** node's **Settings** window.

Select the **Plot on secondary y-axis** check box to plot the *y*-axis data on the secondary *y*-axis to the right of the plot instead of the primary *y*-axis to the left of the plot.

BINS

Select an **Entry method** — **Number of bins** or **Limits** — to define the bins for the histogram's *x*-axis. Select **Number of bins** (the default) to specify the number of bins (default is 10), or select **Limits** to specify a range of limits (`1 2 3 4`, for example) for the histogram bins.

For 2D Histogram nodes, these settings are available for the *x* direction and *y* direction under **x bins** and **y bins**.

OUTPUT

Under **Output**, specify some properties for the appearance of the histogram. Specify whether to use a continuous or discrete function for the histogram, the normalization, and whether to use a standard or a cumulative histogram.

From the **Function** list, select **Continuous** (the default) to plot the histogram as a continuous function or **Discrete** to plot it as a discrete function (that is, using a constant level in each bin). The discrete version is useful to display the

histogram as a bar chart, perhaps with the **Integral** normalization setting so that each bin (bar) shows its relative size and the **Type** set to **Solid** under **Coloring and Style** for filled histogram bins.

From the **Normalization** list, select:

- **Sum of values** to normalize the histogram so that the integral is equal to 1 by dividing the absolute count of each bin by the sum of the counts over all bins. Use this normalization to get the relative size (percentage) of values in each bin.
- **Integral** to normalize the histogram by dividing the absolute count of each bin by the sum of the counts over all bins, each multiplied by the width of the bin.
- **None** (the default) to show the actual element volume without any normalization.
- **Peak** to normalize the histogram so that the peak value is equal to 1.

Select the **Cumulative** check box to make the histogram cumulative (that is, the value in each bin is the sum of the values for all bins up to the current one).

EVALUATION

From the **Measure** list, choose **Auto** (the default); **Integral**, for volume-based data; or **Count**, for element-based data. The **Auto** option uses a measure that depends on the dataset that is used. For Mesh datasets, the element-based measure (**Count**) is used: otherwise, the volume-based measure (**Integral**) is used.

Specify the **Space dimension** and the **Geometry level** for the evaluation. By default, the settings are taken from the dataset. For a specific model, some space dimensions and geometry levels might not be applicable.

From the **Space dimension** list, select **Take from dataset** (the default) or one of the space dimensions **0**, **1**, **2**, or **3**. The default is sufficient except when the dataset is, for example, a cut plane, which can be evaluated for space dimensions 2 or 3.

From the **Geometry level** list, select **Take from dataset** (the default), **Volume**, **Surface**, **Line**, or **Point**. Using a geometry level other than the dataset can be useful, for example, for evaluating over the surfaces of a 3D geometry. For solution datasets, **Take from dataset** defaults to the highest dimension where there are any mesh elements.

LEGENDS

This section is available in 1D plot groups only. Select the **Show legends** check box to display the plotted expressions to the right of the plot. In plots where each line represents a certain time value, eigenvalue, or parameter value, these values are also displayed.

When **Automatic** is selected from the **Legends** list (the default), the legend texts appear automatically. If **Manual** is selected from the **Legends** list, enter your own legend text into the table.

Impedance Graph

Add an **Impedance Graph** subnode ( ) to a **Smith Plot Group** node to create an impedance Smith plot. After defining the expression to plot (an S-parameter, for example), click **Plot** ( ) to create the impedance Smith plot. If you want to add color to the plotted curve (to represent the frequency, for example), add a **Color Expression** subnode.

	Go to Common Results Node Settings for links to information about these sections: **Data**, **Title**, and **Coloring and Style**.

EXPRESSIONS

For an Impedance Graph, you can plot multiple curves in the same graph (Smith plot) using varying line styles and colors. In the table in this section, add one or more expressions to the rows under **Expression** to define the quantity for each curve, and optionally add descriptions under **Description**. The descriptions appear in the legends.

For this table of expressions, the **Replace Expression** and **Add Expression** buttons have the following effect:

- Click the **Replace Expression** ( ) button to select a predefined quantity and replace the entire contents of the **Expression** table with the corresponding variable as the only expression.
- Click the **Add Expression** ( ) button to insert the corresponding variable on a new row in the **Expression** table.

Enter a reference impedance (SI unit: Ω), if using, in the **Reference impedance** field.

LEGENDS

The **Show legends** check box is selected by default to display the plotted expressions to the right of the plot. In plots where each line represents a certain time value, eigenvalue, or parameter value, these values are also displayed.

When **Automatic** is selected from the **Legends** list (the default), select or clear the **Description**, **Expression**, and **Unit** check boxes to control what to include in the automatic legends (by default it includes the description only). You can also add a prefix or a suffix to the automatic legend text in the **Prefix** and **Suffix** fields. If **Manual** is selected from the **Legends** list, enter your own legend text into the table.

Impulse Response

Add an **Impulse Response** subnode ( ) to a 1D plot group to create an impulse response plot. After defining the characteristics of the impulse response, click **Plot** ( ) to create the impulse response plot. If you want to add color to the impulse response, add a **Color Expression** subnode. The impulse response plot reconstructs the impulse response based on a Ray Acoustics simulation.

	For details on setting up a Ray Acoustics model and postprocess the impulse response, see *Impulse Response and Receiver* in the *Acoustics Module User's Guide*.

	Go to Common Results Node Settings for links to information about these sections: **Title** and **Coloring and Style**.

DATA

From the **Dataset** list, choose an applicable dataset or **None**. The default option, **From parent**, uses the dataset from the parent plot group node. Only the Receiver 2D and Receiver 3D datasets are valid for this specialized plot.

From the **Frequency interpretation** list, choose an interpretation of the frequency: **Octave** (the default), **1/3 octave**, or **1/6 octave**. This selections should coincide with the frequency interpretation used in boundary conditions and sources in the underlying Ray Acoustics simulation. The frequency content and resolution of the impulse response are based on this selection.

EXPRESSIONS

Set up the variables that are necessary for reconstructing the impulse response. In practice these variables are used to define and add the contribution of each ray that intersects the receiver dataset to the impulse response.

- Define the frequency variable for the rays (SI unit: Hz) in the **Frequency** field. The default is `rac.f`.
- Define the power variable for the rays (SI unit: $kg \cdot m^2/s^2$) in the **Power** field. The default is `rac.Q`.

- Define the density (SI unit: kg/m^3) in the **Density** field. The default is `rac.rho`.
- Define the speed of sound (SI unit: m/s) in the **Speed of Sound** field. The default is `rac.c`.

For all text fields, click the **Replace Expression** ( ) button to select a predefined quantity and replace the entire contents of the field.

X-AXIS DATA

From the **Transformation** list, choose a transformation of the data on the *x*-axis: **None** (the default) for no transformation, or **Frequency spectrum**. For a frequency spectrum, the following properties are available:

Select the **Number of frequencies** check box and enter the number in the associated text field.

For a frequency range, select the **Frequency range** check box and defined the range using the **Minimum** and **Maximum** fields (SI unit: Hz).

Select the **Scale** check box to transform the frequency spectrum so that it has the same scale as the original data.

ADVANCED

The following settings are available to control the Kaiser-Bessel window functions that are used to reconstruct the frequency content of the impulse response. Each ray contributes with an amplitude, arrival time, and frequency content to the time-domain signal.

- Define a sampling frequency (SI unit: Hz) in the **Sampling frequency** field. The default is 44100.
- Define a ripple factor in the **Ripple factor** field. The default is 0.05.
- Define a passband slope factor in the **Passband slope factor** field. The default is 1.03.

Select to **Remove noncausal signal** (selected per default). This options removes the unphysical parts of the impulse response signal that appear before the arrival time of the first ray. This part is generated due to the nature of the window functions used for the signal reconstruction.

LEGENDS

The **Show legends** check box is selected by default to display the plotted expressions to the right of the plot. In plots where each line represents a certain time value, eigenvalue, or parameter value, these values are also displayed.

When **Automatic** is selected from the **Legends** list (the default), select or clear the **Description**, **Expression**, and **Unit** check boxes to control what to include in the automatic legends (by default it includes the description only). You can also add a prefix or a suffix to the automatic legend text in the **Prefix** and **Suffix** fields. If **Manual** is selected from the **Legends** list, enter your own legend text into the table.

Interference Pattern

The **Interference Pattern** ( ) plot shows the intensity on a cut plane resulting from the interference of multiple rays passing through the cut plane. It is available with a **2D Plot Group**, and you select it from the **More Plots** submenu. A Cut Plane dataset pointing to a Ray (Dataset) dataset must be used. The dataset must point to an instance of the Geometrical Optics interface in which the ray intensity and phase are computed.

	Go to Common Results Node Settings for links to information about these sections: **Data**, **Title**, **Range**, **Coloring and Style**, and **Inherit Style**. For **Interference Patterns** plots, only Cut Plane datasets are allowed as inputs.

	The **Interference Pattern** plot is available with the Ray Optics Module.

COORDINATE RANGE

Specify the origin of the coordinate system in which the interference pattern is plotted. From the **Origin location specification** list, select **Manual** (the default), **By ray index**, or **At ray of greatest intensity**. If **Manual** is selected, enter the **Origin location, x component**; **Origin location, y component**; and **Origin location, z component**. If the specified point does not coincide with the cut plane, the closest point on the cut plane is used as the origin. If **By ray index** is selected, enter the **Ray index**. The origin is then defined at the point where the ray of specified index intersects the cut plane. If **At ray of greatest intensity** is selected, the origin is located where the ray of greatest intensity intersects the cut plane. Select the **Manual x range** and **Manual y range** check boxes to adjust the size of the region in which the interference fringes are plotted. Enter a **Resolution** to determine the number of grid points in each direction that are used to render the interference pattern. The **Resolution** must be an integer from 0 to 1000.

Isosurface (Plot)

Plot a scalar quantity as an **Isosurface** ( ) plot in 3D. An isosurface plot displays a quantity as a colored set of isosurfaces on which the result has a constant value. The plot can also color isosurfaces based on an independent quantity. You can move the isosurfaces interactively. Add Deformation, Color Expression, Filter, or Selection (Plot Attribute) subnodes as needed. Right-click a **3D Plot Group** to add this plot type.

	Before plotting, select the **Interactive** check box to move the isosurfaces defined in this **Isosurface** node interactively using the slider or by entering a shift in the **Shift** field. A zero shift represents the original position of the isosurfaces.

	Go to Common Results Node Settings for links to information about these sections: **Data**, **Expression**, **Title**, **Levels**, **Quality**, and **Inherit Style**.

COLORING AND STYLE

If you select to display level labels for the isosurfaces, select the **Level labels** check box and specify the precision (number of significant digits) as a positive integer in the **Precision** field (default: 4). You can also choose a color for the labels from the **Label color** list.

For coloring the isosurfaces, select one of the following options from the **Coloring** list:

- Select **Color table** (the default) to color the contours using a color table that you choose from the **Color table** list belows.
- Select **Uniform** to use a predefined uniform color, or select **Custom** to define a custom color from the colored list below (on Windows) or by clicking the **Color** button (on Linux and macOS) and then selecting a color from the color palette.
- Select **Gradient** to specify the coloring as a gradient between two colors, which you specify using the **Top color** and **Bottom color** lists.

The **Color legend** check box is selected by default. Clear it to remove the color legend. Select the **Reverse color table** or **Reverse color gradient** and **Symmetrize color range** check boxes as required.

For information about the **Legend type** list, see Legend Type.

Layered Material Slice

Use a **Layered Material Slice** (in 2D; in 3D) plot to display a layered material quantity on a slice created at a specified through-thickness location in 2D (plane or axisymmetric) or 3D. Add Deformation, Filter, Selection

(Plot Attribute), or Height Expression subnodes as needed. Right-click a **2D Plot Group** or **3D Plot Group** to add a **Layered Material Slice** plot from the **More Plots** submenu.

	The Layered Material Slice plot requires the Composite Materials Module, AC/DC Module, or Heat Transfer Module.

THROUGH-THICKNESS LOCATION

In order to create a slice within a layered material, a through-thickness location is required.

Select a **Location definition**: **Reference surface** (the default), **Physical**, **Relative**, **Interfaces**, or **Layer midplanes**.

Once **Reference surface** is selected, the through-thickness location is taken from a layered material definition specified in a **Layered Material Link**, **Layered Material Stack**, or **Material** node (defined as a single-layer material) under **Materials**.

Enter one or more values for a **Local z-coordinate** for the **Physical** option or **Local z-coordinate [-1,1]** for the **Relative** option. The bottom, middle, and top through-thickness location of a layered material, having a total thickness d, can be defined as follows:

- Bottom: 0 (Physical) or –1 (Relative)
- Middle: $d/2$ (Physical) or 0 (Relative)
- Top: d (Physical) or 1(Relative)

Click the **Range** button ( ) to define a range of local z-coordinates using the **Range** dialog box.

LAYOUT

Use the settings in this section to control the layout of the slices. From the **Displacement** list, choose **None** (the default), **Linear**, or **Rectangular**.

If you chose **Linear**, then choose a linear displacement orientation from the **Orientation** list: **x**, **y** (2D); **x**, **y**, **z**, or **Diagonal** (3D). For the first three options, also specify a relative separation distance in the **Relative x-separation** field, for example. The **Diagonal** option uses suitable displacements in the x and y directions; you can specify a relative separation in the z direction in the **Relative z-separation** field.

If you chose **Rectangular**, then choose a rectangular displacement orientation from the **Orientation** list: **xy**, **yx** (2D); **xy**, **yz**, **zx**, **yx**, **zy**, or **xz** (3D). Also specify relative separation distances in the **Relative x-separation** and **Relative y-separation** fields, for example. The first letter indicates the index that increases the fastest (for example, for the **xy** option, the x values increase before the y values).

Select the **Show descriptions** check box to add a description (annotation) for each of the slices. The description depends on the selected **Location definition**:

- For **Reference surface**: The reference surface's local z-coordinate.
- For **Physical** and **Relative**: The evaluated z-coordinate.
- For **Interfaces**: The interface descriptions.
- For **Layer midplanes**: The layer names.

You can also specify a separation of the descriptions as a relative number in the **Relative separation** field.

	Go to Surface (Plot) for the information about other sections present in this plot.

Line

Use a **Line** plot to display a quantity on lines — that is, boundaries in 2D ( ) or edges in 3D ( ). Add Deformation, Filter, Selection (Plot Attribute), or Height Expression (2D only) subnodes as needed. Right-click a **2D Plot Group** or **3D Plot Group** to add these plot types. It is possible to use 1D data in 2D and 3D line plots; the 1D data is then embedded into 2D or 3D, respectively.

	Go to Common Results Node Settings for links to information about these sections: **Data**, **Expression**, **Title**, **Range**, **Coloring and Style**, **Quality**, and **Inherit Style**.

Line Data

A **Line Data** plot node appears in 2D ( ) and 3D ( ) plot groups if you run a method that creates a `LineData` plot.

	It is not possible to add a **Line Data** node from the model tree or toolbars in the COMSOL Desktop. It is only available from the COMSOL Multiphysics API and if you run a method from the **Developer** toolbar. See LineData in the *COMSOL Multiphysics Programming Reference Manual*.

DATA

In the **Data** section, the number of points in the data and the number of line segments in the plot are listed.

	Go to Common Results Node Settings for a link to information about the **Title**, **Range**, and **Coloring and Style** sections.

Line Graph

Use a **Line Graph** ( ) to plot a scalar quantity along a geometric line. The line can be an edge in the geometry, a parameterized curve, or a cut line. Make a graph plot of a quantity versus another quantity (for example, time). Add a Color Expression or Filter subnode as needed. Right-click a **1D Plot Group** or **Polar Plot Group** to add this plot type.

	Go to Common Results Node Settings for links to information about these sections: **Data**, **y-Axis Data** (or **r-Axis Data**), **Title**, **Coloring and Style**, and **Quality**.

SELECTION (SOLUTION DATASETS ONLY)

When **Solution** is selected as a **Dataset**, this section displays. Select **Manual** from the **Selection** list to choose geometry directly from the **Graphics** window. Select **All** to add the applicable geometry or any other predefined grouping.

Y-AXIS

	This section is only available if the **Two y-axes** check box is selected in the **Plot Settings** section of the parent **1D Plot Group** node's **Settings** window.

Select the **Plot on secondary y-axis** check box to plot the y-axis data on the secondary y-axis to the right of the plot instead of the primary y-axis to the left of the plot.

X-AXIS DATA OR θ ANGLE DATA

For **Parametric Sweep** studies, for each pair of outer solutions or inner solutions, one line is plotted on the graph. For example, if there are 10 outer solutions and each outer solution has five inner solutions, then 50 lines are drawn. The number of inner solutions can vary between outer solutions.

Select **Arc length** or **Reversed arc length** from the **Parameter** list to visualize along an arc length in the direction of the arc or the reversed direction of the arc, respectively, or select **Expression** to visualize along, for example, a coordinate expression. If **Expression** is selected, go to Expressions and Predefined Quantities.

LEGENDS

Select the **Show legends** check box to display the plotted expressions to the right of the plot. In plots where each line represents a certain time value, eigenvalue, or parameter value, these values are also displayed.

When **Automatic** is selected from the **Legends** list (the default), select or clear the **Description**, **Expression**, and **Unit** check boxes to control what to include in the automatic legends (by default, it includes the description only). You can also add a prefix or a suffix to the automatic legend text in the **Prefix** and **Suffix** fields. If **Manual** is selected from the **Legends** list, enter your own legend text into the table.

Matrix Histogram

Use the **Matrix Histogram** plot in 2D ( ) when you have a precomputed matrix that you want to visualize as a 2D histogram. For example, in a fatigue analysis, you can use it for rainflow counting to be able to visualize how the stress amplitudes and mean stresses are distributed. Using this plot can then help to see how the actual damage is distributed between the different stress levels. If a large fraction of the total damage is caused by loads that occur only a few times, the statistical sample of the loads can be too small to reach any good conclusions. Add a Height Expression subnode if required.

	Go to Common Results Node Settings for links to information about these sections: **Data**, **Title**, and **Coloring and Style**.

	This plot is available with the Fatigue Module.

EXPRESSION

Click the **Replace Expression** button ( ) to select the matrix variable to use as input for the matrix histogram. The matrix histogram plot uses precomputed matrix variables only.

From the **Unit** list, select any applicable unit for the histogram plot. Select the **Description** check box to customize or enter a description of the plot.

AXES

From the **Unit** list, select an applicable unit for the x- and y-axis of the histogram. The matrix contains data points in the xy-plane, where the x- and y-values are stresses. This means that the x- and y-values can have any pressure unit (pascal, for example). By changing the axis' unit, you choose how to interpret the x- and y-axis in the plot.

Max/Min Volume, Max/Min Surface, Max/Min Line, Max/Min Point

Use the **Max/Min Volume** ( ), **Max/Min Surface** (2D:); 3D:), **Max/Min Line** (2D:); 3D:), and **Max/Min Point** (2D: ; 3D:) plots to plot the maximum and minimum values of an expression and the points there they are attained within the geometry.

When plotting the maximum and minimum value, an associated table appears in the **Table** window (underneath the **Graphics** window if using the default COMSOL Desktop layout). The table contains the maximum and minimum values along with the coordinates for the corresponding locations. The coordinate columns' titles contain the space variable names from the dataset, if you use a **Cut Plane** dataset, for example. Add Deformation, Filter, or Selection (Plot Attribute) subnodes as needed (note that, for a **Max/Min Point** plot, the **At least one but not all** option in the **Filter** subnode is not applicable). Right-click a **2D Plot Group** or **3D Plot Group** to add these plots from the **More Plots** submenu.

	Go to Common Results Node Settings for links to information about these sections: **Data**, **Expression**, **Title**, and **Inherit Style**.

ADVANCED

Under **Advanced,** select the evaluation point type from the **Point type** list:

- **Lagrange points** (the default) to evaluate the maximum or minimum value in the Lagrange points. Select a **Lagrange order** (default: 5; the Lagrange order is the number of partitions of an element edge) to adjust the accuracy of the minimum or maximum values.
- **Node points** (the default) to evaluate the maximum or minimum value in the node points of the extended mesh.
- **Integration points** to evaluate the maximum or minimum value in the integration points. Select an **Integration order** (default: 4) to adjust the accuracy of the minimum or maximum values.

Edit these other settings if required:

- Enter a **Display Precision** for the number of decimals displayed in the labels. The default is 6.
- If you want to add a prefix or a suffix to the labels for the maximum and minimum values, add them in the **Prefix** and **Suffix** fields. The same prefix and suffix are used for the maximum and minimum labels.
- The **Recover** default is **Off** because recovery takes processing time. To edit the default and use polynomial-preserving recovery and recover fields with derivatives such as stresses or fluxes with a higher theoretical convergence than smoothing, from the **Recover** list, select **Within domains** to perform recovery inside domains or **Everywhere** to apply recovery to all domain boundaries.
- Select an option from the **Display** list: **Min and max** (the default), **Min**, or **Max**.
- Select the **Include unit** check box to add the unit of the expression for which the plot shows the maximum or minimum value.

COLORING AND STYLE

From the **Color** list, choose the color to use for the maximum and minimum values; choose **Custom** to choose a custom color from a color palette.

From the **Background color** list, choose a background color for a rectangular area around the displayed maximum and minimum values; the default is **None**, which means that there is no background color.

Select the **Show frame** check box to display the maximum and minimum values in a rectangular frame. Select the frame background color from the **Background color** list.

Mesh (Plot)

Use a **Mesh** plot ( ) to display a mesh. It is possible to plot the mesh without solving a model using a Mesh dataset. The plot can display the mesh quality (2D or 3D) or the mesh size. For 2D and 3D meshes, add Deformation or Filter subnodes as needed. Right-click a plot group to add this plot type.

	Go to Common Results Node Settings for links to information about these sections: **Data**, for all meshes, and **Title**, **Element Filter**, **Shrink Elements**, and **Inherit Style** for 2D and 3D meshes.

	You can also create a Mesh plot by right-clicking the **Mesh** node and selecting **Plot** ( ).

The following section is only available in the **Settings** window for 1D meshes.

Y-AXIS

	This section is only available for 1D **Histogram** plots and if the **Two y-axes** check box is selected in the **Plot Settings** section of the parent **1D Plot Group** node's **Settings** window.

Select the **Plot on secondary y-axis** check box to plot the y-axis data on the secondary y-axis to the right of the plot instead of the primary y-axis to the left of the plot.

The following two sections are only available in the **Settings** window for 2D and 3D meshes.

LEVEL

This section is available for 2D and 3D **Mesh** plot nodes. Select a **Level** to display the mesh: **All**, **Volume** (3D only), **Surface**, **Line**, or **Point**. If **Surface** is selected, select the base **Element type** to visualize: **All**, **Triangle**, or **Quad**.

	For 3D models and if **Volume** is selected, select the base **Element type** to visualize: **All**, **Tetrahedron**, **Pyramid**, **Prism**, or **Hex**.

COLOR

This section is available for 2D and 3D **Mesh** plot nodes. Under **Color**, use the following settings to control the coloring of the mesh plot:

- Select an **Element color**: Any basic color, **Quality** (the default) to get a mesh element quality plot, **Size** to get a plot of the local mesh size, **Custom** to select a different color from the color palette, or **None** to plot with no color.

  If you have selected **Quality** from the **Element color** list, you can select a quality measure:

- Select a **Quality measure**:
  - **Skewness**, which is the default quality measure, is a measure of the equiangular skew.
  - **Maximum angle**, which is based on the cosine of the largest angle in the element.
  - **Volume versus circumradius** is the default quality measure, which is based on a quotient of the element volume and the radius of the circumscribed sphere (or circle) of the element.
  - **Volume versus length**, which is based on a quotient of element edge lengths and element volume.
  - **Condition number**, which is based on the element dimension divided by the condition number of the matrix transforming the element to a reference element.
  - **Growth rate**, which is a measure of the local (anisotropic) mesh growth rate.
  - **Custom expression** provides a **Quality expression** field where your can enter a custom expression for the mesh quality. The expression should provide scalar values between 0 and 1, where 1 is an element of the highest possible value. You can use it, for example, to combine some of the existing mesh quality measures. Click the **Replace Expression** ( ) button to choose and insert a predefined expression to replace the contents of the **Quality expression** field.

  For more information about mesh quality, see Mesh Element Quality and Size.
- Select a **Color table** for the element quality or element size. By default, the **TrafficLight** color table is used with the **Reverse color table** check box selected, so that a high element quality is indicated with a green color and elements with a poor element quality are red. If the default is not suitable for the plot, try other options.
- Also, if the element color displays the element quality or element size, select the **Color legend** check box (selected by default) to display a color legend next to the plot.
- By default, if the element color displays the element quality or element size, the **Reverse color table** check box is selected. Clear this check box, if needed, to reverse the colors in the color table so that the color for the minimum value instead indicates the maximum value, and vice versa.
- Select a **Wireframe color** — any basic color, **Custom** to select a different color, or **None** to plot with no color indicating the mesh element boundaries.

The following section is only available in the **Settings** window for 1D meshes.

EXPRESSION

This section is available for 1D **Mesh** plot nodes. From the **Expression** list, choose **None** to display the 1D mesh as a straight line. Choose **Size** to plot the mesh so that the value on the y-axis is the local mesh size.

Multislice

Use a **Multislice** ( ) plot to display a scalar quantity on slices in multiple directions inside a 3D domain. Add Deformation, Filter, or Selection (Plot Attribute) subnodes as needed. Right-click a **3D Plot Group** to add this plot from the **More Plots** submenu.

	Go to Common Results Node Settings for links to information about these sections: **Data**, **Expression**, **Title**, **Range**, **Coloring and Style**, **Quality**, and **Inherit Style**.

MULTIPLANE DATA

Under **Multiplane Data**, select an **Entry method** — **Number of planes** or **Coordinates** — for the **x-planes**, **y-planes**, and **z-planes**.

For **Number of planes**, enter the number of planes in the **Planes** field. For **Coordinates**, enter a range of coordinates in the **Coordinates** field.

Nyquist

Use a **Nyquist** ( ) plot to plot a Nyquist plot that shows the magnitude and phase of a frequency response. The plot shows the magnitude as the distance from the origin and the phase as the angle using a curve with the frequency as the parameter. Typical data to use for a Nyquist plot includes complex-valued impedance data from a frequency domain study. Add a Color Expression subnode as needed. To add this plot type, right-click a **1D Plot Group** or **Polar Plot Group** node and choose **Nyquist** from the **More Plots** menu.

Except where noted below, see Global for all of the settings. For Global Plots, the **Expressions** section is called **y-Axis Data** (or **r-Axis Data** for polar plots), but the instructions are the same.

Under **Coloring and Style**, select the **Show unit circle** check box to include a unit circle in the Nyquist plot.

	1D Plot Group and Polar Plot Group

Octave Band

Use an **Octave Band** ( ) plot to represent and plot a frequency response in frequency bands. An octave band plot corresponds to plotting the average or integrated value of, for example, the squared pressure over a given frequency band defined by the center frequency or midfrequency and the bandwidth. What the plot shows is a "white noise transfer function" of the system; that is, it assumes that the input is of the same nature as the output. The data input to an octave band plot is a frequency-domain solution; for example, it can be the acoustic pressure resulting from a Frequency Domain study or a parametric frequency sweep. To add this plot type, right-click a **1D Plot Group** node and choose **Octave Band** from the **More Plots** menu.

	Go to Common Results Node Settings for links to information about these sections: **Data**, **Title**, and **Coloring and Style**.

	This plot type is only available with the Acoustics Module.

	For examples that use an Octave Band plot, see *Absorptive Muffler*: Application Library path **Acoustics_Module/Automotive/absorptive_muffler** and *The Brüel & Kjær 4134 Condenser Microphone*: Application Library path **Acoustics_Module/Electroacoustic_Transducers/bk_4134_microphone**.

SELECTION

From the **Geometric entity list**, select the entity level (default: **Point**) for the evaluation of the octave band plot. Choose **Global** for a global evaluation. If you select line, boundary, or domain, the quantity will be averaged. You can use those entity levels to plot the response as the average over the outlet of a system, for example. Then, except for **Global**, use the selection tools to select geometric entities on that level for the evaluation.

Y-AXIS DATA

In the **Expression** field, enter an expression for the input to the octave band plot. Click the **Replace Expression** ( ) or **Insert Expression** ( ) button to select predefined expressions based on the physics of the model. If you want to add a description of the expression for the plot title, select the **Description** check box and enter a description in the text field below.

From the **Expression type** list, choose one of the following types:

- **Amplitude** (the default), to compute the octave plot treating the expression as an amplitude p_{rms}. The input is the value p (it is generally a complex-valued variable). It is in turn used to calculate the rms pressure p_{rms}, which defines the level L:

$$L = 10\log_{10}\left(\frac{p_{\mathrm{rms}}^2}{p_{\mathrm{ref}}^2}\right), p_{\mathrm{rms}}^2 = 0.5|p|^2$$

  In the **Amplitude reference** field, enter a value of expression for an amplitude reference p_{ref}. Click the **Replace Expression** ( ) to pick an amplitude reference from a list of predefined expressions.

- **Power**, to compute the octave plot treating the expression as a power P, which defines the level L:

$$L = 10\log_{10}\left(\frac{P}{P_{\mathrm{ref}}}\right)$$

  In the **Power reference** field, enter a value of expression for a power reference P_{ref}. Click **Replace Expression** ( ) to pick a power reference from a list of predefined expressions.

- **Transfer function**, to compute the octave plot treating the expression as a transfer function H (generally, a complex-valued variable), which defines the level L:

$$L = 10\log_{10}|H| + L_{\mathrm{ref}}$$

  In the **Level reference** field, enter a value of expression for a level reference L_{ref}. Click **Replace Expression** ( ) to pick a level reference from a list of predefined expressions.

Underneath those settings, the mathematical formula used for each expression type is displayed.

Outside the frequency range, the signal is assumed to be zero and no extrapolation is done.

PLOT

You can choose one of the following styles of the octave band plot from the **Style** list:

- **Continuous**, to plot a continuous response
- **Octave bands** (the default), to plot the response using octave bands.
- **1/3 octave bands**, to plot the response using 1/3 octave bands.
- **1/6 octave bands**, to plot the response using 1/6 octave bands.

For the **Octave band**, **1/3 octave band**, and **1/6 octave band** styles, the **Use in-band data only** check box is selected by default to use an integral that is evaluated as an average only based on data points inside the octave or 1/3 octave bands.

You can use some predefined weighting or a user-defined weighting of the frequency data. The frequency weighting is used in acoustics to shape the response to match the characteristics of the human ear.

> The predefined weightings are defined in IEC 61672-1. See *IEC 61672-1 Electroacoustics - Sound level meters - Part 1: Specifications* for details.

From the **Weighting** list, select:

- **Z-weighted (flat)** (the default), to use a zero weighting; that is, a flat weighting.
- **A-weighted**, to use a weighting that mimics the loudness perceived by the human ear.

- **C-weighted**, to use a C-weighting, which is an alternative standardized weighting that is in use within the acoustics community.
- **Expression**, to enter a user-defined value or expression for the weighting in the **Expression** field. The expression defines the gain as a function of the frequency. The gain given in dB is then given as `20·log10(`*expression*`)`. Use the frequency variable `freq` for user-defined expressions.

The following COMSOL Multiphysics plot shows the different weighting types as gain (dB) versus frequency (Hz):

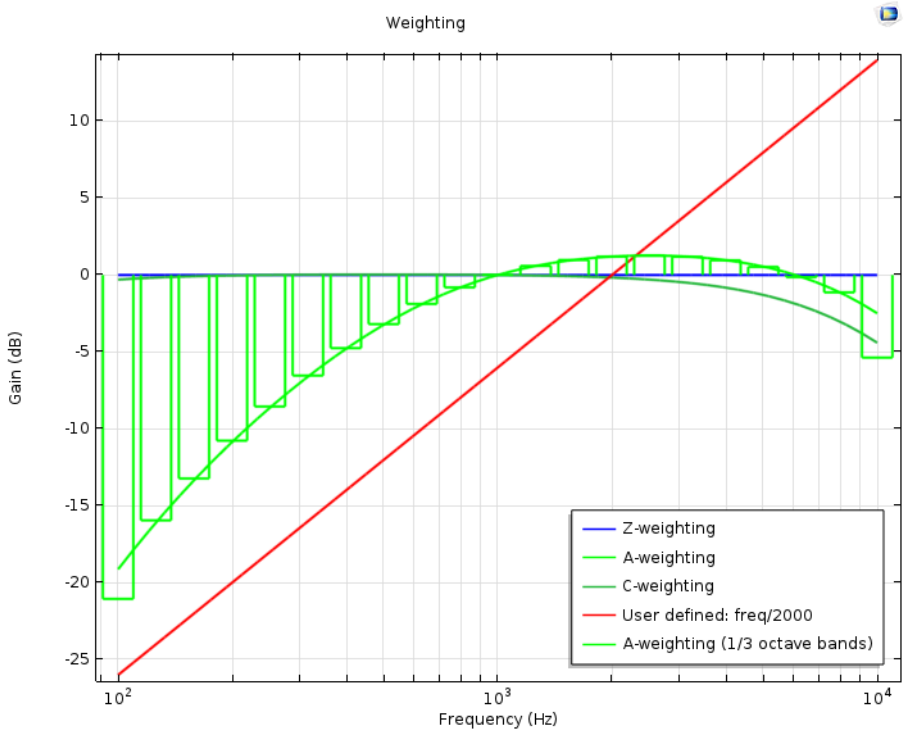

Figure 21-7: The plot shows Z-weighting (blue), A-weighting (light green), C-weighting (dark green), and a user-defined weighting (red). The 1/3 octave bands (light green) also show A-weighting.

LEGENDS

Select the **Show legends** check box to display the plotted expressions to the right of the plot. In plots where each line represents a certain time value, eigenvalue, or parameter value, these values are also displayed.

When **Automatic** is selected from the **Legends** list (the default), select or clear the **Description** and **Expression** check boxes to control what to include in the automatic legends (by default it includes the description only). If **Manual** is selected from the **Legends** list, enter your own legend text into the table.

Optical Aberration

The **Optical Aberration** ( ) plot shows various types of monochromatic aberration that arise when electromagnetic rays are focused by a system of lenses and mirrors. It is available with a **2D Plot Group**, and you select it from the **More Plots** submenu. Add a Height Expression subnode if required.

An Intersection Point 3D dataset (see Intersection Point 2D and Intersection Point 3D) pointing to a Ray (Dataset) dataset must be used. The dataset must point to an instance of the Geometrical Optics interface in which the optical path length is computed.

In addition, in the Settings window for the Intersection Point 3D dataset, **Hemisphere** must be selected from the **Surface type** list. The **Center** of the hemisphere corresponds to the focus, and the **Axis direction** points from the focus

toward the center of the exit pupil in the focusing system. Some of these details can be set up automatically using the settings and buttons available in the **Focal Plane Orientation** section.

	Go to Common Results Node Settings for links to information about these sections: **Data**, **Title**, **Range**, **Coloring and Style**, and **Inherit Style**. For **Optical Aberration** plots, only Intersection Point 3D datasets are allowed as inputs.

	The **Optical Aberration** plot is available with the Ray Optics Module.

FILTERS

Use the options in the **Filters** section to exclude some rays from the calculation of the Zernike coefficients.

- Select the **Filter by wavelength** check box to exclude all rays except those of a specified vacuum wavelength. If this check box is selected, enter a **Wavelength** (default: 632.8 nm) and a **Tolerance** (default: 1 nm). If the difference between the specified wavelength and the vacuum wavelength of a ray exceeds this tolerance, then the ray will be ignored.
- Select the **Filter by release feature index** check box to exclude all rays except those released by a specific physics feature. Then enter an integer value for the index; the default is 1. This field is 1-indexed, meaning that 1 corresponds to the first ray release feature, 2 is the second ray release feature, and so on.
- Select the **Filter by number of reflections** check box to include rays only if they have reflected a specified number of times. Then enter an integer for the number of reflections; the default is 0. For this option to work correctly, it is necessary to select the **Count reflections** check box in the settings for the Geometrical Optics interface, before running the study.
- Select the **Filter by additional logical expression** check box to include rays if they satisfy another user-defined expression. The expression is considered to be true if it returns a nonzero value. The default expression is 1, which would cause all rays to be included.

FOCAL PLANE ORIENTATION

The settings in the **Focal Plane Orientation** section are used to define the position of the focus and the direction of the nominal optical axis that intersects this focus.

Select an option from the **Normal to focal plane** list: **Direction based** (the default), **Position based**, or **User defined**.

- For **Direction based**, the normal to the focal plane is the average ray direction. This average is taken over all rays that satisfy the filter criteria given by the **Filters** section above.
- For **Position based**, the normal to the focal plane is determined such that the ray positions are as close to the plane as possible. If the rays are stopped at a curved surface, the normal computed in this way may differ significantly from the surface normal.
- For **User defined**, enter values or expressions for the normal vector components directly. By default, the z-axis is used.

Enter a value or expression for the **Reference hemisphere radius** (SI unit: m). The default is 50 mm. When automatically generating an **Intersection Point 3D** dataset for the Gaussian reference hemisphere, this value is copied to the dataset settings. As a general rule, this value should be much larger than the RMS spot size but must be smaller than the back focal length of the optical system.

The **Create Reference Hemisphere Dataset** and **Recompute Reference Hemisphere Dataset** buttons can be used to automatically generate or update an **Intersection Point 3D** ( ) dataset from which the Gaussian reference

hemisphere is defined. The hemisphere is centered at a location where the rms spot size is minimized. The hemisphere axis should point backward along the nominal optical axis through the focal point.

Before clicking **Create Focal Plane Dataset**, make sure that the **Dataset** is either a **Ray** dataset ( ) or **From parent** (if the parent is a **Ray** dataset). If rays are released at multiple field angles and you want to compute the Zernike coefficients associated with one of these fields, first select the **Filter** by release feature index check box in the **Filters** section.

Before clicking **Recompute Reference Hemisphere Dataset**, make sure that the **Dataset** is already an **Intersection Point 3D** dataset.

When clicking either button, the **Intersection Point 3D** dataset is then created (or updated) to define the intersection points with a hemisphere. The center of the hemisphere is positioned as close as possible to the RMS focus.

ZERNIKE POLYNOMIALS

Select the **Length unit** in which the weighted Zernike polynomials will be plotted. The default is the micron (μm). This input is disabled if the model is dimensionless.

The optical path difference among all rays that pass through the exit pupil is computed. Then a linear least-squares fit is used to express the optical path difference as a linear combination of a standard set of orthogonal polynomials on the unit circle, called *Zernike polynomials*. The polynomials are scaled by the coefficients that are computed by the least-squares fit, called the *Zernike coefficients*.

Select a **Maximum polynomial order**: **2**, **3**, **4**, or **5** (the default).

Select an option from the **Terms to include** list: **All**, **All higher-order terms**, or **Select individual terms**:

- If **All** is selected, all Zernike polynomials up to the specified **Maximum polynomial order** are included in the plot.
- If **All higher-order terms** is selected, all Zernike polynomials up to the specified **Maximum polynomial order** are included in the plot, except for the terms of order 0 and 1. These terms indicate misalignment or misplacement of lenses within an optical system and are less useful for measuring lens quality.
- If **Select individual terms** is selected, check boxes appear for all Zernike polynomials. The common names of the polynomials are included where applicable. Select or clear the check boxes to determine which terms should be included in the plot. You can also use the **Select All** and **Clear All** buttons to quickly select or clear all of these check boxes at the same time.

Enter a **Number of grid points**, which must be an integer between 100 and 1,000,000. Increasing the number of grid points increases the number of evaluations of the Zernike polynomials on the unit circle; this improves the quality of the plot but does not affect the calculation of the Zernike coefficients.

	A list of Zernike polynomials and their derivation, properties, and references are included in the Ray Optics Modeling chapter of the *Ray Optics Module User's Guide*.

POSITION

Specify the position of the center of the unit circle. The default center location is the origin, (0,0). By assigning nonzero components to the center location it is possible to view multiple types of optical aberration in the Graphics window side-by-side.

	For an example of the use of Optical Aberration plots: *Double Gauss Lens*: Application Library path **Ray_Optics_Module/Lenses_Cameras_and_Telescopes/double_gauss_lens**.

Particle (Plot)

Use the **Particle** ( ) plot in 1D to plot a particle variable versus time for all particles, or to plot one particle property versus another at a set of time steps. When plotting particle properties versus time, it is also possible to perform data series operations on the particle data. To add a particle plot, right-click a **1D Plot Group** node and choose **Particle** from the **More Plots** menu.

	Go to Common Results Node Settings for links to information about these sections: **Data**, **Title**, and **Coloring and Style**. For **Particle** plots, only Particle datasets are allowed as inputs.

Y-AXIS DATA

The **y-Axis Data** section allows you to define an expression, which may be dependent on both particle and field variables.

X-AXIS DATA

Select a **Parameter**: **Solution number** or **Expression**.

For **Solution number**, a distinct line is plotted for every particle, with the y-axis being the user-defined expression from the y-Axis data section and the x-axis being time. The total number of lines equals the total number of particles (after taking the Filter subnode and the selection of the Particle (Dataset), if any, into account) multiplied by the total number of selected outer solutions if applicable.

For **Expression**, the expressions entered in the **y-Axis Data** and **x-Axis Data** sections are plotted against each other for all particles at each specified time – that is, the total number of lines equals the total number of selected times multiplied by the total number of selected outer solutions.

LEGENDS

Select the **Show legends** check box to display the plotted expressions to the right of the plot. In plots where each line represents a certain time value, eigenvalue, or parameter value, these values are also displayed.

When **Automatic** is selected from the **Legends** list (the default), the legend texts appear automatically. If **Manual** is selected from the **Legends** list, enter your own legend text into the table.

DATA SERIES OPERATION

Choose an **Operation**: **Sum** (the default), **None**, **Average**, **Maximum**, **Minimum**, **RMS**, **Standard deviation**, or **Variance**. The **Operation** is applied to the particles only if the x-axis is **Time**. If **None** is selected, a distinct line is plotted for each particle, otherwise the selected data series operation is used to compute a single data point for all particles at each time step. The default prevents an extremely large number of lines from being plotted when a new Particle plot is created.

Particle Tracing

Use a **Particle Tracing** plot to visualize the trajectory of a massless particle subject to a flow field in 2D ( ) or 3D ( ). Visualize *pathlines* (that is, trajectories of particles released in a flow field), which can be time-dependent or static. For time-dependent flows, also use a snapshot in time of the flow field as a static field. The motion of the

particles does not affect the flow field. Add a Color Expression or Deformation subnode as needed. Right-click a **2D Plot Group** or **3D Plot Group** to add these plot types from the **More Plots** submenu.

	Go to Common Results Node Settings for links to information about these sections: **Data**, **Expression**, **Title**, **Coloring and Style**, **Quality** (Resolution and Recover only), and **Inherit Style**. See below for sections specific to this plot: **Particle Positioning**, **Release**, **Quality** (ODE solver settings), and **Advanced**. For **Particle Tracing** plots, only Solution datasets are allowed as inputs.

	There is an additional setting under **Coloring and Style** for this plot. The **Type** of **Point Style** available includes **Comet tail**. Comet tail plots provide a convenient way to indicate the direction of travel of particles at a given point in time. The tail of the comet typically points in the opposite direction to the particle velocity — so visually, it is the same as the tail of a comet approaching the sun. See Defining the Coloring and Style for the **Comet tail** settings.

	This plot type is intended for visualizing a small number of particles on simple geometries. The Particle Tracing Module has vastly superior particle tracing capabilities and should be used for all but the simplest of models.

PARTICLE POSITIONING

For 3D models, enter the initial position of particles in the **x**, **y**, and **z** fields. For 2D models, enter the **Positioning** details as described below.

Select a **Positioning**: **Starting-point controlled** or **Boundary coordinates**. Boundary coordinates are useful, for example, for flow models with one or more inflow boundaries.

- If **Starting-point controlled** is selected, enter the initial position of particles in the **x** and **y** fields. The initial position can be defined as numbers but can also include parameters and variables.
- If **Boundary coordinates** is selected, select an item from the **Named selection** list and select an **Entry method**: **Number of points** or **Boundary parameters**.
  - If **Number of points** is selected, enter the number of grid **Points** (the default is 10).
  - If **Boundary parameters** is selected, enter the **Relative coordinates**.

RELEASE

Under **Release**, specify when to **Release particles**: **Once** (the default), **At intervals**, or **At times**. Select:

- **Once** to release particles once at the first available time, typically at time 0 (zero). To delay the release, select the **Start time** check box and enter a time.
- **At intervals** to release particles at regular intervals starting at the first available time, typically at time 0 (zero). To delay the release, select the **Start time** check box and enter a time. Enter a **Time between releases**. The default is 1.
- **At times** to release particles at an arbitrary time point; enter multiple **Times** to release particles.

QUALITY (ODE SOLVER SETTINGS)

Under **Quality**, also define the **ODE solver settings** as needed. Go to ODE Solver Settings — Relative Tolerance, ODE Solver Settings — Absolute Tolerance, and ODE Solver Settings — Step Size for details.

The **Advanced** section contains settings that do not normally need to be adjusted.

Under **Advanced**, also define these settings as needed. Go to Advanced — Termination and Advanced — Instantaneous Flow Field for details.

In the **Termination** section, edit the **Maximum number of steps** and **Edge tolerance.** In the **Instantaneous flow field** section, edit the **Plot static flow field even when time dependent** check box, the **Time variable** default, and the **End time active**.

ODE Solver Settings — Relative Tolerance

Follow these supplementary instructions for the **ODE solver settings** section found under the **Quality** section.

Enter a **Relative tolerance** for the ODE solver. The default is 0.001.

- When solving the second-order ODE $m\ddot{x} = F(t, x, \dot{x})$ for x, the solver first rewrites it as two coupled first-order ODEs: one for the position x and one for the velocity $\dot{x}$, each with two components in 2D and three components in 3D.
- The **Relative tolerance** value is the relative error tolerance that the ODE solver uses. It applies to all components of the particle's position and velocity. The solver controls the step size so that the estimated error e in each integration step satisfies

$$\begin{cases} e < \max(\text{atolpos}, \text{rtol} \cdot |x_i|) & \text{(for all components } x_i \text{ of } x) \\ e < \max(\text{atolvel}, \text{rtol} \cdot |\dot{x}_i|) & \text{(for all components } \dot{x}_i \text{ of } \dot{x}) \end{cases}$$

  where rtol is the relative tolerance specified, atolpos is the absolute tolerance for the particle's position components, and atolvel equals the absolute tolerance for the particle's velocity components.

ODE Solver Settings — Absolute Tolerance

Follow these supplementary instructions for the **ODE solver settings** section found under the **Quality** section. Specify the solver's absolute tolerance. The default is **Automatic**. To enter different values, select **Manual** from the **Absolute tolerance** list and enter a **Position**. The **Position** field can contain a single value — it applies to all components of the position and is the absolute tolerance.

ODE Solver Settings — Step Size

Follow these supplementary instructions for the **ODE solver settings** section found under the **Quality** section. Specify the solver **Step size.** The default is **Automatic** — the COMSOL Multiphysics software uses the initial value of the acceleration (force divided by mass) and the relative and absolute tolerances to determine the initial time step.

- The automatic maximum step size is 10% of the total simulation time for time-dependent flows as well as for static flow fields where the end time is manually specified in the **Advanced** section (in the **Plot static flow field even when time dependent>End Time** field). For static flow fields where the end time is not set manually, there is no upper limit of the step size. However, in this case, the initial time step is less than or equal to 0.1.

To edit the settings, select **Manual** from the **Step size** list and enter values in the **Initial time step** and **Maximum time step** fields.

- The **Maximum time step** is the longest time step the solver takes. It has higher priority than the **Initial time step**; that is, if an initial step size is set larger than the maximum step size, the solver lowers the initial step size to the maximum step size.

	The initial step size, whether entered manually or computed automatically, is not necessarily the first step the solver takes but is a first try. If this step leads to an error such that the tolerances are not met, the COMSOL software lowers it.

Advanced — Termination

Follow these supplementary instructions for the section found under the **Advanced** section. The **Termination** section contains settings that determine when to end the particle tracing simulation.

- To specify an upper limit of the number of time steps, click to select the **Maximum number of steps** check box and edit the default (1000). The particle simulation ends after this number of steps.
- To specify how close to the geometry boundary the pathlines are cut when they exit the geometry, edit the **Edge tolerance** default (0.001). This is a relative tolerance controlling how close to the geometry boundary the pathlines are cut when they exit the geometry. A lower value cuts the line closer to the geometry boundary.

Advanced — Instantaneous Flow Field

Follow these supplementary instructions for the section found under the **Advanced** section. To specify if you want to plot an instantaneous flow field, even if the solution is time dependent, select the **Plot static flow field even when time dependent** check box. This freezes the time selected previously — for example, from a **Plot Group** page in the **Data>Time** list — to the value specified and considers this a static flow field.

- Edit the **Time variable** default (`partt`) if required. Normally it is not necessary to change the default name but the name can be used in expressions as well as for the color when coloring the pathlines according to an expression.
- If required, select the **End time active** check box and enter a value.

Particle Tracing with Mass

Use a **Particle Tracing with Mass** plot in 2D ( ) or 3D ( ) to visualize the trajectory of a particle with mass and subject to a flow field. Add a Color Expression or Deformation as needed. Right-click a **2D Plot Group** or **3D Plot Group** to add these plot types from the **More Plots** submenu.

For particles with mass, COMSOL Multiphysics generates the pathlines by solving the fundamental equation of motion:

$$m\ddot{x} = F(t, x, \dot{x})$$

for the pathline $x(t)$. Here, m is the particle's mass, F equals the force acting upon the particle, and t is time. This is a system of ODEs for x, which COMSOL Multiphysics solves using a pair of Runge-Kutta methods of orders four and five. The solver advances the algorithm with the solution of order five and uses the difference between the order-five and order-four solutions to obtain the local error estimate.

For massless particles, the equation of motion is:

$$\dot{x} = v(t, x)$$

	The true formulation of Newton's second law of motion is $\frac{d}{dt}(m\dot{x}) = F(t, x, \dot{x})$ That is, the time derivative of the mass must be considered. The particle-tracing algorithm does not solve this equation. Thus, if an expression is specified for the particle mass that depends on time, the result are incorrect.

Axisymmetric Models

	In 2D axisymmetry, three components for the force are available for particles with mass.

When specifying all three, the algorithm solves for a line in 3D in cylindrical coordinates, but the plot only shows the projection on the axisymmetry plane. In this case, the centripetal force is considered; that is, the algorithm solves the equation

$$\ddot{r} = \frac{F_r}{m} + r\dot{\varphi}^2 \qquad \ddot{\varphi} = \frac{F_\varphi}{rm} - \frac{2\dot{r}\dot{\varphi}}{r} \qquad \ddot{z} = \frac{F_z}{m}$$

where m is the particle mass and (r, φ, z) are the cylindrical coordinates. The variable corresponding to the velocity component in the φ direction (the default name is `partv`) has the dimension length/time, and equals $r\dot{\varphi}$ as $\dot{\varphi}$ has the dimension radians/time.

	• Go to Common Results Node Settings for links to information about these sections: **Data**, **Title**, **Coloring and Style**, **Quality** (Resolution and Recover only), and **Inherit Style**. For **Particle Tracing with Mass** plots, only Solution datasets are allowed as inputs. • See Particle Tracing for **Particle Positioning**, **Release**, **Quality** (ODE solver settings), and **Advanced** settings. See Particle Tracing in Fluid Flow for more information about predefined expressions for drag-driven particle movement that are available for these models.

	There is an additional setting under **Coloring and Style** for this plot. The **Type** of **Point Style** available includes **Comet tail**. Comet tail plots provide a convenient way to indicate the direction of travel of particles at a given point in time. The tail of the comet typically points in the opposite direction to the particle velocity — so visually, it is the same as the tail of a comet approaching the sun. Go to Common Results Node Settings for the **Comet tail** settings links.

	This plot type is intended for visualizing a small number of particles on simple geometries. The Particle Tracing Module has superior particle tracing capabilities and should be used for all but the simplest of models.

TOTAL FORCE

Specify the total force acting on the particles. Click the **Replace Expression** ( ) or **Insert Expression** ( ) button to select predefined expressions based on the physics of the model. Or enter an **Expression** — for 2D, enter or select **Fx** and **Fy** components of the force; for 3D, enter or select **Fx**, **Fy**, and **Fz** components of the force. Enter a **Description** (or edit the default). When some predefined forces are added, there are additional **Parameters** with a **Value** to enter into a table.

MASS AND VELOCITY

Enter the particle **Mass**. Enter the **Initial velocity** — for 2D enter values for the **x component** and **y component**; for 3D enter values for **x component**, **y component**, and **z component**.

QUALITY (ODE SOLVER SETTINGS)

Under **Quality**, also define the **ODE solver settings** as needed and described for Particle Tracing. Go to ODE Solver Settings — Relative Tolerance, ODE Solver Settings — Absolute Tolerance, and ODE Solver Settings — Step Size for details.

ADVANCED

Under **Advanced**, define the **Particle velocity variables**. Edit the default variable component names for each particle's velocity. The default names are `partu` (**x component**), `partv` (**y component**), and `partw` (**z component**).

Under **Advanced**, also define these settings as needed and described for Particle Tracing. Go to Advanced — Termination and Advanced — Instantaneous Flow Field for details.

Particle Trajectories

Use a **Particle Trajectories** ( ) plot to visualize the particle trajectories computed using one of the Particle Tracing physics interfaces. This plot must point to a Particle (Dataset). Add a Color Expression, Deformation, or **Filter** subnode as needed. For the settings in the **Filter** subnode, see Filter for Particle Trajectories. Right-click a **2D Plot Group** or **3D Plot Group** to add this plot.

	Go to Common Results Node Settings for links to information about these sections: **Data**, **Title**, **Coloring and Style**, **Extra Time Steps**, and **Inherit Style**. For **Particle Trajectories** plots, only Particle datasets are allowed as inputs.

	The Particle Trajectories plot creates trajectories not for the actually selected time, parameter, or frequency value but for all values lower or equal to the selected value.

	This **Particle Trajectories** plot is available with the Particle Tracing Module. However, the plot does not compute the particle trajectories during results processing — the trajectories are computed by one of the physics interfaces in the Particle Tracing Module. The plot can thereby render tens of thousands of particles quickly because the trajectories have already been computed.

Filter for Particle Trajectories

You can right-click a Particle Trajectories plot node to add a **Filter** subnode ( ), which controls the particle types to include and whether to render all particles or a subset of the particles. The Filter node has the following section:

PARTICLE SELECTION

From the **Particles to include** list, select the particle types or subset to include in the particle trajectories plot:

- **All** (the default) to include all particles.
- **Primary** to include primary particles only.
- **Secondary** to include secondary particles only.
- **Logical expression** to include a subset of particles that fulfill the logical expression that you enter in the **Logical expression for inclusion** field. For example, `pt.V>1` only includes particles with a velocity larger than 1, and `x>0` only includes particles in areas where the x coordinate is positive. Click the **Replace Expression** ( ) button to select predefined expressions for the logical expression.

From the **Particles to render** list, select an option for controlling how many particles to render:

- **All** (the default) to render all particles in the particle tracing simulation.
- **Fraction** to only render a fraction of the particles. You specify the fraction as a number between 0 and 1 in the **Fraction of particles** field. The default fraction is 1; that is, to render all particles.
- **Number** to only render a certain number of particles, which you specify in the **Number of particles** field. The default is to render 100 particles.

Phase Portrait

Use a **Phase Portrait** plot ( ) for 2D and 2D axisymmetric models to visualize large datasets of particle trajectories. The traditional use of a phase portrait is to plot the particle position on the x-axis and the particle velocity on the y-axis. Each dot in the xy-plane represents a particle. By default, the position is taken as the distance from the origin (0, 0, 0) for 3D models. Add a Color Expression as needed. Right-click a **2D Plot Group** to add this plot from the **More Plots** submenu.

	This plot is available with the Particle Tracing Module.

EXPRESSION

Select an option from the **x-axis** list: **Position** or **Manual**. If **Manual** is selected, enter an **Expression** (SI unit: m). Select an option from the **y-axis** list: **Speed** or **Manual**. If **Manual** is selected, enter an **Expression** (SI unit: m/s).

	The plot is best represented if the magnitude of the x-axis data and y-axis data are equal. Therefore, it can be useful to normalize the data by selecting **Manual** from the **x-axis** and **y-axis** lists under **Expression** and applying a suitable scaling factor.

	Go to Common Results Node Settings for links to information about these sections: **Data**, **Title**, **Coloring and Style**, and **Inherit Style**.

Poincaré Map

Use a **Poincaré Map** plot ( ) to visualize particle trajectories using a *Poincaré map* (sometimes called a *first recurrence map*). Add a Color Expression as needed.

The Poincaré map is constructed by first defining a **Cut Plane** ( ) on the **Particle** dataset ( ). Then add a **3D Plot Group** or a **2D Plot Group**, depending on the dimension of the particle trajectories, and right-click the plot group node to add these plots from the **More Plots** submenu.

This plot type is useful to visualize the particle trajectories in a plot that represents the position of the particles in a section that is usually transversal to the particle trajectories. The Poincaré map represents the particle trajectories in a space dimension that is one dimension lower than the original particle space.

The Poincaré map parent plot group should point to this cut plane (select a **Cut plane** dataset under **Data**). The resulting plot places a dot on the cut plane at the location where a particle crossed the plane. The same particle can cross the cut plane multiple times.

	Go to Common Results Node Settings for links to information about these sections: **Data**, **Title**, **Inherit Style**, and **Coloring and Style**.

	This plot is available with the Particle Tracing Module and with 3D models only.

Point Data

A **Point Data** plot node appears in 2D ( ) and 3D ( ) plot groups if you run a method that creates a `PointData` plot.

	It is not possible to add a **Point Data** node from the model tree or toolbars in the COMSOL Desktop. It is only available from the COMSOL Multiphysics API and if you run a method from the **Developer** toolbar. See PointData in the *COMSOL Multiphysics Programming Reference Manual*.

DATA

In the **Data** section, the number of points in the data is listed.

	Go to Common Results Node Settings for a link to information about the **Title**, **Range**, and **Coloring and Style** sections.

Point Graph

Use a **Point Graph** ( ) to visualize the value in a point along time or a parameter value. It can be a point in the geometry or a cut point. Add a Color Expression or Filter subnode as needed. Right-click a **1D Plot Group** or **Polar Plot Group** to add this plot type.

	See Global for these settings: **x-Axis Data** or θ **Angle Data**. Then go to Common Results Node Settings for links to information about these sections: **Data**, **Title**, **y-Axis** (or **r-Axis**) **Data**, and **Coloring and Style**.

SELECTION (SOLUTION DATASETS ONLY)

Select **Manual** from the **Selection** list to choose geometry directly from the **Graphics** window. Select **All** to add the applicable geometry or any other predefined grouping.

Y-AXIS

	This section is only available if the **Two y-axes** check box is selected in the **Plot Settings** section of the parent **1D Plot Group** node's **Settings** window.

Select the **Plot on secondary y-axis** check box to plot the *y*-axis data on the secondary *y*-axis to the right of the plot instead of the primary *y*-axis to the left of the plot.

QUALITY

This section is only available when the dataset refers to a solution using a time-dependent study. You can then increase the time resolution if needed for a smooth graph plot. In the **Refinement** list, enter an integer between 1 (the default value) and 1000. For an increased time resolution, enter a higher refinement value.

LEGENDS

Select the **Show legends** check box to display the plotted expressions to the right of the plot. In plots where each line represents a certain time value, eigenvalue, or parameter value, these values are also displayed. For 1D point plots, the legend displays the coordinate (or vertex number).

When **Automatic** is selected from the **Legends** list (the default), select or clear the **Description**, **Expression**, and **Unit** check boxes to control what to include in the automatic legends (by default, it includes the description only). You can also add a prefix or a suffix to the automatic legend text in the **Prefix** and **Suffix** fields. If **Manual** is selected from the **Legends** list, enter your own legend text into the table.

Point Trajectories

Use a **Point Trajectories** plot to visualize trajectories of geometric points in 2D ( ) and 3D ( ). For example, you can use it in a time-dependent multibody dynamics model to plot the trajectory of a geometric point, cut point, or a user-defined trajectory along with the actual moving bodies. Add a Color Expression, Deformation, or **Filter** (see Filter for Point Trajectories) subnode as needed. Right-click a **2D Plot Group** or **3D Plot Group** to add this plot from the **More Plots** submenu.

	Go to Common Results Node Settings for links to information about these sections: **Data**, **Title**, **Coloring and Style**, and **Inherit Style**. See below for the sections specific to this plot: **Trajectory Data** and **Selection**.

	The Point Trajectories plot creates trajectories not for the actually selected time, parameter, or frequency value but for all values lower or equal to the selected value.

	There is an additional setting under **Coloring and Style** for this plot. The **Type** of **Point Style** available includes **Comet tail**. Comet tail plots provide a convenient way to indicate the direction of travel of points at a given point in time. The tail of the comet typically points in the opposite direction to the point's velocity — so visually, it is the same as the tail of a comet approaching the sun. See Defining the Coloring and Style for the **Comet tail** settings.

TRAJECTORY DATA

Select a source for the **Plot data**: **Global** or **Points** (the default).

- If **Global** is selected, enter the coordinates, as global expressions or numbers, for a point in the **x-expression**, **y-expression**, and **z-expression** fields.
- If **Points** is selected, enter expressions that are valid at the location of the points in the **x-expression**, **y-expression**, and **z-expression** fields. The expressions can include the time and the space coordinates, for example. You select the points that you want to plot trajectories for in the **Selection** section below and by clicking directly in the **Graphics** window.

To assist in picking an expression, click the **Replace Expression** button ( ) above the text fields to choose from a number of available scalar variables.

SELECTION

This section is only available when you select **Points** from the **Plot data** list. It contains tools for selecting points in the model geometry by clicking directly in the **Graphics** window, for example (see About Selecting Geometric Entities for details).

Filter for Point Trajectories

You can right-click a Point Trajectories plot node to add a **Filter** subnode ( ), which controls the points to include and whether to render all points or a subset of the points. The Filter node has the following section:

POINT SELECTION

From the **Points to include** list, select the points or subset to include in the point trajectories plot:

- **All** (the default) to include all points.
- **Logical expression** to include a subset of points that fulfill the logical expression that you enter in the **Logical expression for inclusion** field. For example, `x>0` only includes points in areas where the *x* coordinate is positive. Click the **Replace Expression** ( ) button to select predefined expressions for the logical expression.

From the **Particles to render** list, select an option for controlling how many particles to render:

- **All** (the default) to render all points in the point trajectories plot.
- **Fraction** to only render a fraction of the points. You specify the fraction as a number between 0 and 1 in the **Fraction of points** field. The default fraction is 1; that is, to render all points.
- **Number** to only render a certain number of points, which you specify in the **Number of points** field. The default is to render 100 points.

Principal Stress Volume

Use the **Principal Stress Volume** ( ) to plot the principal stress and principal strain in structural mechanics models. The values of the principal stresses σ_1, σ_2, and σ_3 are the eigenvalues of the stress tensor, ordered such that $\sigma_1 > \sigma_2 > \sigma_3$. The same applies for the principal strains ε_1, ε_2, and ε_3. The plots also show the corresponding eigenvectors using arrows. Add a Deformation, Filter, Color Expression, or Selection (Plot Attribute) as needed. Right-click a **3D Plot Group** to add this plot from the **More Plots** submenu.

	Go to Common Results Node Settings for links to information about these sections: **Data**, **Principal Components**, **Title**, **Positioning**, **Coloring and Style**, and **Inherit Style**. In the **Coloring and Style** section, the **Arrow base** setting is not available because it is not applicable when plotting principal stress or principal strain eigenvectors.

Principal Stress Surface

Use the **Principal Stress Surface** plots in 2D ( ) and 3D ( ) to plot the principal stress and principal strain in structural mechanics models. The values of the principal stresses σ_1, σ_2, and σ_3 are the eigenvalues of the stress tensor, ordered such that $\sigma_1 > \sigma_2 > \sigma_3$. The same applies for the principal strains ε_1, ε_2, and ε_3. The plot also shows the corresponding eigenvectors using arrows. Add a Deformation, Filter, Color Expression, or Selection (Plot Attribute) as needed. Right-click a **2D Plot Group** or **3D Plot Group** to add this plot from the **More Plots** submenu.

	Go to Common Results Node Settings for links to information about these sections: **Data**, **Title**, **Inherit Style**, **Principal Components**, **Positioning**, and **Coloring and Style**. In the **Coloring and Style** section, the **Arrow base** settings is not available because it is not applicable when plotting principal stress or principal strain eigenvectors.

Principal Stress Line

Use the **Principal Stress Line** plots in 2D ( ) and 3D ( ) to plot the principal stress and principal strain in structural mechanics models. The values of the principal stresses σ_1, σ_2, and σ_3 are the eigenvalues of the stress tensor, ordered such that $\sigma_1 > \sigma_2 > \sigma_3$. The same applies for the principal strains ε_1, ε_2, and ε_3. The plot also shows the corresponding eigenvectors using arrows. Add a Deformation, Filter, Color Expression, or Selection (Plot Attribute) as needed. Right-click a **2D Plot Group** or **3D Plot Group** to add this plot from the **More Plots** submenu.

	Go to Common Results Node Settings for links to information about these sections: **Data**, **Title**, **Inherit Style**, **Principal Components**, and **Coloring and Style**. In the **Coloring and Style** section, the **Arrow base** settings is not available because it is not applicable when plotting principal stress or principal strain eigenvectors.

Radiation Pattern

Radiation Pattern plots are used to plot the value of a global variable for the radiation pattern of an electromagnetic field or acoustic pressure field.

- For the RF Module and the Wave Optics Module, the variables are the far-field norm, `normEfar` and `normdBEfar`; the components of the far-field variable `Efar`; and the axial ratio, `axialRatio` and `axialRatiodB`.
- For the Acoustics Module, the variables are the exterior-field pressure `efc1.pext` and sound pressure level `efc1.Lp_pext`.

The variables are plotted for a selected number of angles on a circle (in 2D) or a sphere (in 3D). The angle interval and the number of angles can be manually specified. Also the circle origin and radius of the circle (2D) or sphere (3D) can be specified. For 3D Radiation Pattern plots, you also specify an expression for the surface color. For 1D Radiation Pattern plots, you can optionally compute the beam width.

The radiation pattern plot plots a surface shape by deforming the specified circle or sphere in 2D and 3D or a circular slice in 1D. For each evaluation point on the specified circle or sphere, the plot deforms the specified circle or sphere from the evaluation point in the radial direction so that the deformed surface shape distance from the origin becomes equal to the value of the specified expression on the evaluation point on the specified circle or sphere.

The main advantage with the Radiation Pattern plot, as compared to making a Line Graph, is that the circle or sphere used for defining the plot directions is not part of the geometry for the solution. Thus, the number of plotting directions is decoupled from the discretization of the solution domain.

Radiation Pattern plots always use the spatial frame when evaluating outside the meshed domain..

	In 3D, this plot type uses the spherical coordinates r, θ, and φ, so that: • The radial distance $r = \sqrt{x^2 + y^2 + z^2}$ • The polar angle $\theta = \mathrm{acos}(z/r)$ • The azimuthal angle $\varphi = \mathrm{atan2}(y,x)$

Default Radiation Pattern plots are automatically added to any model that uses exterior-field calculations. You can add a **Radiation Pattern** plot node to any plot group (Polar, 1D, 2D, and 3D):

- 1D or Polar plots ( ) for 2D, 2D axisymmetric, or 3D geometry
- 2D plot ( ) for 2D axisymmetric or 3D geometry
- 3D plot ( ) for 2D axisymmetric or 3D geometry

To add this plot type, right-click a plot group node and choose **Radiation Pattern** from the **More Plots** menu. For 2D and 3D **Radiation Pattern** nodes, you can right-click to add a Deformation subnode if desired.

	Go to Common Results Node Settings for links to information about these sections: **Data**, **Title**, **Range**, **Inherit Style**, and **Coloring and Style**. For 3D plot groups, see the list for **Color**. For **Radiation Pattern** plots, only Solution datasets are available as inputs.

EXPRESSION

For the standard settings, see Expressions and Predefined Quantities. In 3D, you can also select the **Threshold** check box and then enter a threshold value as a scalar number in the associated text field. The threshold value corresponds to the evaluated radius that maps to the plotted radius 0. The default, if the **Threshold** check box is cleared, is the minimum radius among those evaluated for. Additionally, in 3D, select the **Use as color expression** check box to use the radiation pattern plot expression defined in this section also as the color expression. The **Color** section is then not available.

EVALUATION

1D Plot Group and Polar Plot Group

Under **Angles**, enter the **Number of angles**. The default is 50.

Select a **Restriction**: **None** (the default) or **Manual**. If **Manual** is selected, enter values (SI unit: deg) for φ **start** (the default is 0 degrees) and φ **range** (the default is 360 degrees). If you want to compute the beam width, select **On** from the **Compute beam width** list. Then, a **Level down** field appears, where you can specify a nonnegative number to compute the beam width at a certain level down from the reference direction. The unit for that level is the same as the unit for the expression used in the radiation pattern plot (dB, for example, for an exterior-field sound pressure level). The beam width is the width of the lobe around the reference direction (in degrees). When you compute the beam width, the computed values appear in a **Beam width** table with columns for the parameter (typically a

frequency), the beam width, and the null-to-null beam width (the angular separation from which the magnitude of the radiation pattern decreases to zero away from the main beam; see the figure below).

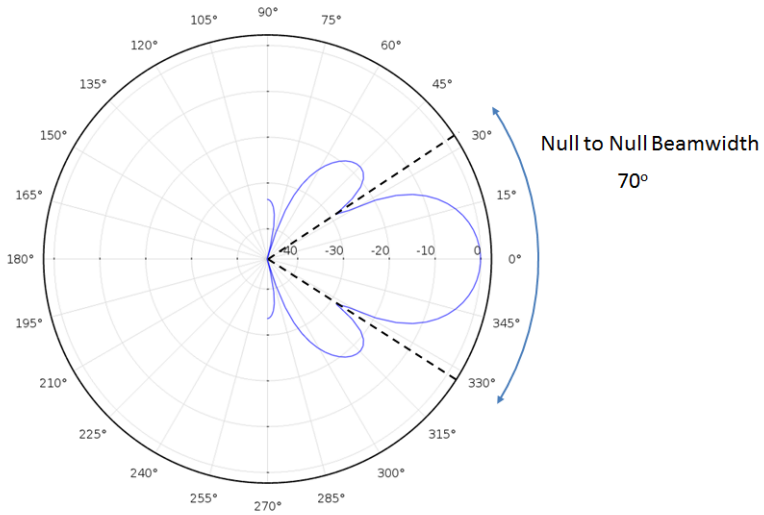

Note that the beam width calculation only makes sense if there is a main lobe in the reference direction.

For 1D Radiation Pattern plot nodes referring to a solution in a 2D axisymmetric or 3D component, under **Center** enter the coordinate at the center of the evaluation circle. Under **Normal** specify the normal to the circular slice of the far-field bulb. The default normal is {0, 0, 1} for the normal using 3D components and {0, 1, 0} for the normal using 2D axisymmetric components.

If a Pressure Acoustics interface is used in the component from which the dataset is taken, you can also add a **Radius** (SI unit: m) under **Evaluation distance** for a radius-dependent exterior-field expression.

Under **Reference direction** specify a reference direction from which the angle is measured. The entered vector is projected onto the evaluation plane. The default direction is {1, 0, 0} for the reference direction using 3D components, {0, 0, 1} for 2D axisymmetric components, and {1, 0} for 2D components.

A schematic of the evaluation circle is depicted in Figure 21-5. In 3D, you can preview the evaluation circle in the geometry by clicking the **Preview Evaluation Plane** button at the bottom of the **Evaluation** section. An example of the resulting plot is depicted in Figure 21-6.

2D and 3D Plot Groups

Under **Angles**, enter the **Number of elevation angles**. The default is 10. Enter the **Number of azimuth angles**. The default is 20.

Select a **Restriction**: **None** (the default) or **Manual**. If **None** is selected in a 3D plot group, you can also select **On** or **Off** from the **Compute directivity** list. If the **Compute directivity** list is set to **On**, you can enter or select an expression for the directivity in the **Directivity expression** field. The direction for the strongest radiation and the directivity value (also in dB) display in a **Directivity** table window (see The Table Window and Tables Node). So if, for example, you model a speaker that is located in an infinite baffle (and symmetry is used in the radiation pattern calculation), then plot and evaluate the whole field to get the directivity.

If **Manual** is selected, enter values (SI unit: deg) for:

- θ **start** (the default is 0 degrees)
- θ **range** (the default is 180 degrees)

- φ **start** (the default is 0 degrees)
- φ **range** (the default is 360 degrees)

If a pressure acoustics interface is used in the component from which the dataset is taken, you can also specify the following settings for a radius-dependent exterior-field expression. Under **Sphere** from the list, select **Unit sphere** (the default) or **Manual**. If **Manual** is selected, enter values for the **x**, **y**, and **z** coordinates at the center of the sphere (SI unit: m). The default is 0. Enter a **Radius** (SI unit: m). The default is 1 m.

For 2D axisymmetric radiation pattern plots, you can evaluate the azimuthal (φ) angle once for each angle when you specify a name of the variable for the (φ) angle in the **Azimuthal angle variable** field and use it in the expression for the radiation pattern. Doing so slows down the evaluation, so if the **Azimuthal angle variable** field is empty, an evaluate-once-and-revolve approach is used instead.

LEGENDS

This section is available in 1D plot groups only. Select the **Show legends** check box to display the plotted expressions to the right of the plot. In plots where each line represents a certain time value, eigenvalue, or parameter value, these values are also displayed.

When **Automatic** is selected from the **Legends** list (the default), the legend texts appear automatically. You can add a prefix or a suffix to the automatic legend text in the **Prefix** and **Suffix** fields. If **Manual** is selected from the **Legends** list, enter your own legend text into the table.

Ray (Plot)

Use a **Ray** ( ) plot to visualize the value of a ray variable versus time for all rays, or to plot two ray variables against each other at a set of time steps. The **Ray** plot must point to a Ray (Dataset). Add a Color Expression subnode to color the resulting lines, or add a **Filter** subnode to plot the properties of only a subset of rays in dataset as needed. For the settings in the **Filter** subnode, see Filter for Ray and Ray Trajectories. To add this plot type, right-click a **1D Plot Group** node and choose **Ray** from the **More Plots** menu.

	Go to Common Results Node Settings for links to information about these sections: **Data**, **Title**, **Coloring and Style**, and **Legends**. For **Ray** plots, only Ray datasets are allowed as inputs.

	This plot is available with the Ray Optics Module or the Acoustics Module.

Y-AXIS DATA

In the **y-Axis Data** section, you can define an expression, which may be dependent on both particle and field variables.

X-AXIS DATA

Select a **Parameter**: **Solution number** or **Expression**.

For **Solution number**, a distinct line is plotted for every ray, with the y-axis being the user-defined expression from the **y-Axis data** section and the x-axis being time. The total number of lines equals the total number of rays (after taking the **Filter** subnode and the selection of the Ray (Dataset), if any, into account) multiplied by the total number of selected outer solutions if applicable.

For **Expression**, the expressions entered in the **y-Axis Data** and **x-Axis Data** sections are plotted against each other for all rays at each specified time — that is, the total number of lines equals the total number of selected times multiplied by the total number of selected outer solutions.

LEGENDS

Select the **Show legends** check box to display the plotted expressions to the right of the plot. In plots where each line represents a certain time value, eigenvalue, or parameter value, these values are also displayed.

When **Automatic** is selected from the **Legends** list (the default), the legend texts appear automatically. If **Manual** is selected from the **Legends** list, enter your own legend text into the table.

DATA SERIES OPERATION

Choose an **Operation**: **Sum** (the default), **None**, **Average**, **Maximum**, **Minimum**, **RMS**, **Standard deviation**, or **Variance**. The Operation is applied to the rays only if the x-axis is **Time**. If **None** is selected, a distinct line is plotted for each ray, otherwise the selected data series operation is used to compute a single data point for all rays at each time step. The default prevents an extremely large number of lines from being plotted when a new Ray plot is created.

Ray Trajectories

Use a **Ray Trajectories** plot in 2D ( ) or 3D ( ) to visualize the trajectories of rays computed using the Geometrical Optics or Ray Acoustics interface. Add a Color Expression, Deformation, or **Filter** subnode as needed. For the settings in the **Filter** subnode, see Filter for Ray and Ray Trajectories. Right-click a **2D Plot Group** or **3D Plot Group** to add this plot. The plot does not compute the ray trajectories during results processing — the trajectories are computed by one of the physics interfaces (Ray Acoustics or Geometrical Optics). The plot can thereby render tens of thousands of rays quickly because the trajectories have already been computed

	Go to Common Results Node Settings for links to information about these sections: **Data**, **Title**, **Coloring and Style**, **Extra Time Steps**, and **Inherit Style**. For **Ray Trajectories** plots, only Ray datasets are allowed as inputs.

	The Ray Trajectories plot creates trajectories not for the actually selected time, parameter, or frequency value but for all values lower or equal to the selected value.

	This plot is available with the Ray Optics Module or the Acoustics Module.

Filter for Ray and Ray Trajectories

You can right-click a Ray Trajectories plot node to add a **Filter** subnode ( ), which controls the particle types to include and whether to render all particles or a subset of the particles. The Filter node has the following section:

RAY SELECTION

From the **Rays to include** list, select the rays types or subset to include in the ray trajectories plot:

- **All** (the default) to include all rays.
- **Primary** to include primary rays only.
- **Secondary** to include secondary rays only. This includes the reflected rays released at material discontinuities.
- **Logical expression** to include a subset of rays that fulfills the logical expression that you enter in the **Logical expression for inclusion** field. For example, `gop.I>1[W/m^2]` only includes rays with an intensity greater than 1 W/m^2, and `x>0` only includes rays in areas where the x coordinate is positive. Click the **Replace Expression** ( ) button to select predefined expressions for the logical expression.

From the **Rays to render** list, select an option for controlling how many rays to render:

- **All** (the default) to render all rays in the ray tracing simulation.
- **Fraction** to only render a fraction of the rays. You specify the fraction as a number between 0 and 1 in the **Fraction of rays** field. The default fraction is 1; that is, to render all rays.
- **Number** to only render a certain number of rays, which you specify in the **Number of rays** field. The default is to render 100 rays.

Reflection Graph

Add a **Reflection Graph** subnode ( ) to a **Smith Plot Group** node to create a reflection Smith plot. After defining the expression to plot (an S-parameter, for example), click **Plot** ( ) to create the reflection Smith plot. If you want to add color to the plotted curve (to represent the frequency, for example), add a **Color Expression** subnode.

	Go to Common Results Node Settings for links to information about these sections: **Data**, **Title**, and **Coloring and Style**.

EXPRESSIONS

For an Reflection Graph, you can plot multiple curves in the same graph (Smith plot) using varying line styles and colors. In the table in this section, add one or more expressions to the rows under **Expression** to define the quantity for each curve, and optionally add descriptions under **Description**. The descriptions appear in the legends.

For this table of expressions, the **Replace Expression** and **Add Expression** buttons have the following effect:

- Click the **Replace Expression** ( ) button to select a predefined quantity and replace the entire contents of the **Expression** table with the corresponding variable as the only expression.
- Click the **Add Expression** ( ) button to insert the corresponding variable on a new row in the **Expression** table.

LEGENDS

The **Show legends** check box is selected by default to display the plotted expressions to the right of the plot. In plots where each line represents a certain time value, eigenvalue, or parameter value, these values are also displayed.

When **Automatic** is selected from the **Legends** list (the default), select or clear the **Description**, **Expression**, and **Unit** check boxes to control what to include in the automatic legends (by default it includes the description only). You can also add a prefix or a suffix to the automatic legend text in the **Prefix** and **Suffix** fields. If **Manual** is selected from the **Legends** list, enter your own legend text into the table.

Scatter Surface and Scatter Volume

Use scatter plots to visualize a scalar quantity as scattered spheres on a 2D **Scatter Surface** ( ) or in a 3D **Scatter Volume** ( ) (as functions of spatial coordinates or any quantities).

Scatter plots can be used as alternatives to arrow plots for scalar quantities or to represent the correlation between two or more different variables to get a feeling for how quantities correlate. To display a quantity using the color and radius of scattered spheres in the model geometry, use the spatial coordinates (x, y, and z in 3D) as the expressions for the scatter plot axes.

If you use some other quantities as the variables that determine the scattered spheres' positions on the axes, it is good practice to remove the plotting of the dataset's edges (typically the geometry boundaries) by clearing the **Plot dataset edges** check box in the main plot group node's **Settings** window. In those cases, the axes in the **Graphics** window no longer represent the space coordinate for the geometry.

The radius and color can both be functions of independent quantities, so a 3D scatter plot can provide information about up to five different quantities as the three axis directions, color, and radius. Right-click a **2D Plot Group** or **3D Plot Group** to add these plot types from the **More Plots** submenu.

	Go to Common Results Node Settings for links to information about these sections: **Data**, **Expression**, **Title**, **Range**, **Radius**, **Color**, **Coloring and Style**, and **Inherit Style**.

EVALUATION POINTS

Under **Evaluation Points**, select an **Entry method** for the **grid points** coordinates based on space dimension (**x grid points** and **y grid points** for 2D; **r grid points** and **z grid points** for 2D axial symmetry; or **x grid points**, **y grid points**, and **z grid points** for 3D).

The evaluation points are located in a block-shaped (3D) or rectangular (2D) grid where the axes represent the expressions defined in the **Expression** section.

- If **Number of points** is selected, enter the number of **Points** in each direction (the default is 15 for 2D Scatter Surface and 7 for 3D Scatter Volume).
- If **Coordinates** is selected, enter **Coordinates** (SI unit: m).

Slice

Use a **Slice** ( ) to display a scalar quantity on slices inside a 3D domain. Add Deformation, Filter, or Selection (Plot Attribute) subnodes as needed. Right-click a **3D Plot Group** to add this plot.

	Go to Common Results Node Settings for links to information about these sections: **Data**, **Expression**, **Title**, **Range**, **Coloring and Style**, **Quality**, and **Inherit Style**.

PLANE DATA

Under **Plane Data**, select a **Plane Type**: **Quick** (the default) to specify planes orthogonal to the coordinate axes or **General** to specify general planes.

If **Quick** is selected:

- From the **Plane** list, select **xy-planes**, **yz-planes**, or **zx-planes** as the set of planes orthogonal to the coordinate axes applicable for the model geometry.
- Select an **Entry method**: **Number of planes** or **Coordinates**.
  - If **Number of planes** is selected, enter **Planes**.
  - If **Coordinates** is selected, enter the applicable (x, y, or z) grid **Coordinates**. Choose a set of cut plane slices to a coordinate axis, specify the transverse coordinate by entering the location along the transverse coordinate axis in the **Coordinates** field.

If **General** is selected:

- Select an option from the **Plane entry method** list: **Three points** or **Point and normal**.
  - If **Three points** is selected, enter **x**, **y**, or **z** coordinates in the **Point 1**, **Point 2**, and **Point 3** fields.
  - If **Point and normal** is selected, enter **x**, **y**, or **z** coordinates in both the **Point** and **Normal** sections.

- If required, select the **Additional parallel planes** check box and select an **Entry method**: **Number of planes** or **Distances**.
  - If **Number of planes** is selected, enter the number of grid **Planes** (the default is 4).
  - If **Distances** is selected, enter the **Distances** (SI unit: m).

To move the slices interactively, select the **Interactive** check box before plotting. You can then move the slices using the slider or by typing a shift in the **Shift** field. A zero shift represents the original position of the slices.

Spot Diagram

The **Spot Diagram** plot can be added to a **2D Plot Group** ( ) to visualize the intersection of rays with a surface. The surface could be a physical boundary in the model, or it could be a fictitious plane such as the focal plane of a lens. The data source may only be added to a 2D plot group but requires a ray tracing solution in a 3D model. Add a Color Expression subnode if required.

	Go to Common Results Node Settings for links to information about these sections: **Data**, **Title**, and **Inherit Style**.

	The **Spot Diagram** plot is available with the Ray Optics Module.

DATA

The type of dataset determines the algorithm for computing the coordinates of each ray in the image plane.

If the dataset for the **Spot Diagram** plot is a **Ray** dataset (see Ray (Dataset)), then the rays are projected onto a 2D surface based on the average position and direction at the selected solution time. Alternatively, an **Intersection Point 3D** dataset can be selected (see Intersection Point 2D and Intersection Point 3D). Then the plot shows the intersection points of the rays with an intersecting plane at the specified location and orientation.

FILTERS

Use the options in the **Filters** section to remove some rays or intersection points from view.

- Select the **Filter by wavelength** check box to hide all rays except those of a specified vacuum wavelength. If this check box is selected, enter a **Wavelength** (default: 632.8 nm) and a **Tolerance** (default: 1 nm). If the difference between the specified wavelength and the vacuum wavelength of a ray exceeds this tolerance, then the ray will not be plotted.
- Select the **Filter by release feature index** check box to hide all rays except those released by a specific physics feature. Then enter an integer value for the index; the default is 1. This field is 1-indexed, meaning that 1 corresponds to the first ray release feature, 2 is the second ray release feature, and so on.
- Select the **Filter by number of reflections** check box to show rays only if they have reflected a specified number of times. Then enter an integer for the number of reflections; the default is 0. For this option to work correctly, it is necessary to select the **Count reflections** check box in the settings for the Geometrical Optics interface before running the study.
- Select the **Filter by additional logical expression** check box to show rays if they satisfy another user-defined expression. The expression is considered to be true if it returns a nonzero value. The default expression is 1, which would cause all rays to be shown.

FOCAL PLANE ORIENTATION

The settings in the **Focal Plane Orientation** section are used to define the direction of the tangential and normal vectors in the local coordinate system defined on the surface.

Select an option from the **Normal to focal plane** list: **Direction based** (the default), **Position based**, or **User defined**.

- For **Direction based**, the normal to the focal plane is the average ray direction. This average is taken over all rays that satisfy the filter criteria given by the **Filters** section above.
- For **Position based**, the normal to the focal plane is determined such that the ray positions are as close to the plane as possible. If the rays are stopped at a curved surface, the normal computed in this way may differ significantly from the surface normal.
- For **User defined**, enter values or expressions for the normal vector components directly. By default, the z-axis is used.

Select an option from the **Transverse direction** list: **Automatic** or **User defined**.

- For **Automatic**, a set of two transverse directions are arbitrarily chosen, such that they are orthogonal to each other and to the normal direction.
- For **User defined**, enter the components of one of the transverse directions directly. By default, the x-axis is used. If necessary, this transverse direction is projected onto the plane perpendicular to the normal direction. Then the other transverse direction is the cross product of the normal with the first transverse direction. The **Transverse direction** should never be parallel to the **Normal to focal plane**.

The **Create Focal Plane Dataset** and **Recompute Focal Plane Dataset** buttons can be used to automatically generate or update an **Intersection Point 3D** ( ) dataset in which the rms spot size is minimized.

Before clicking **Create Focal Plane Dataset**, make sure that the **Dataset** is either a **Ray** dataset ( ) or **From parent** (if the parent is a **Ray** dataset). If rays are released at multiple field angles and you want to locate the image plane that minimizes the rms spot size for one of these fields, first select the **Filter by release feature index** check box in the **Filters** section; you can always clear the check box after generating the **Intersection Point 3D** dataset.

Before clicking **Recompute Focal Plane Dataset**, make sure that the **Dataset** is already an **Intersection Point 3D** dataset.

When clicking either button, the **Intersection Point 3D** dataset is then created (or updated) to define the intersection points with a plane. This plane is positioned and oriented such that the rms spot size of the intersection points is minimized.

LAYOUT

Use the settings in the **Layout** section to specify whether all rays should be presented as one diagram, or if rays should be organized by wavelength or release feature and then arranged into an array of spots. If the rays are presented as an array of spots, then the displacement between spots in the resulting plot is strictly for visualization purposes and does not accurately depict the relative position of these spots in the image plane.

Select an option from the **Spot arrangement** list: **Sort by release feature** (the default), **Sort by wavelength**, or **Single spot**.

- For **Sort by release feature**, one spot will be shown for each ray release feature for which solution data exists.
- For **Sort by wavelength**, one spot will be shown for each wavelength. Select an option from the **Sorting method** list: **Limits**, **Number of intervals**, or **Tolerance** (the default).
  - For **Limits**, enter a list of **Limits** (SI unit: m). Rays having a vacuum wavelength within any one of the specified intervals will be grouped in the same spot.
  - For **Number of intervals**, enter an integer value for the **Number of intervals**. The default is 10. The rays will be organized into the specified number of subintervals based on wavelength, with each interval creating a spot. Also select an option from the **Distribution** list. If **Equal number of rays** (the default) is selected, then the rays

are divided among the specified number of bins so that each bin contains the same number of rays, while trying to keep rays of the same wavelength in the same group. If **Equal interval width** is selected, the rays are distributed among the specified number of intervals so that each interval is the same size.

- For **Tolerance**, enter a value for the **Tolerance** (SI unit: m). The default is 1 nm. Rays will be grouped into the same spot if the difference between their vacuum wavelengths is less than the specified tolerance.

- For **Single spot**, the relative displacement of rays in the plot will be proportional to their relative displacement in the image plane; the rays will not be moved relative to each other for visualization purposes.

For **Sort by release feature** or **Sort by wavelength**, select an option from the **Layout** list: **Average over rays** (the default) or **Average over area**.

- For **Average over rays**, the coordinates of the center of each spot are defined as the arithmetic mean over the coordinates of rays in that spot.
- For **Average over area**, the coordinates of the center of each spot are defined as the average of the maximum and minimum coordinates of rays in that spot.

Enter values for the **Horizontal padding factor** and **Vertical padding factor**. The default values are 0.5. The padding factors determine the amount of blank space that will be placed between the spots in a spot diagram array. If the value is 0, then the spots might touch if they are equal in size. For negative values the spots may overlap.

ANNOTATIONS

Use the settings in the **Annotations** section to display information about each spot as text in the Graphics window.

- Select the **Show wavelength** check box to display the vacuum wavelength of each spot.
- Select the **Show spot coordinates** check box to display the position of each spot.
- Select the **Show spot size** check box to display the RMS spot size of each spot.

For each type of annotation listed above, you can select an option from the **Position** list: **Above spot** or **Below spot**. It is possible to put several lines of text above or below each spot. You can also select a **Length unit**. The length units for each type of annotation are controlled independently; for example, you could display the vacuum wavelength in nanometers and the RMS spot size in microns. Also, for **Show spot coordinates**, you can choose one of the following options from the **Coordinate system** list: **Global** (the default) or **Local**. For **Global** the x, y, and z-coordinates of each spot center are shown. For **Local**, an ordered pair is shown to indicate the position of each spot center relative to the origin of the image plane.

Select the **Show circle** check box to draw a circle at the origin in the image plane. This could be used, for example, to draw the Airy disk for reference. You can enter a value or expression in the **Radius** text field.

Select the **Show text frames** check box to draw a text frame around each annotation.

Select the **Fit annotations to spot** check box to fit the annotations more closely to spots of varying sizes. This applies to spot diagram arrays (see the **Layout** section). If this check box is cleared, then the vertical positioning of the annotations will be the same for all spots in each row of a spot diagram array, even if the spots have different heights.

POSITION

In the **Position** section, you can enter value or expressions for the local x- and y-coordinates of the origin of the spot diagram. This can be used, for example, to compare the spot diagrams from different studies or from different parameter values in a **Parametric Sweep**, by positioning them next to each other..

More information about postprocessing in Ray Optics models can be found in the Ray Optics Modeling chapter of the *Ray Optics Module User's Guide*.

	For an example of the use of Spot Diagram plots: *Double Gauss Lens*: Application Library path **Ray_Optics_Module/Lenses_Cameras_and_Telescopes/double_gauss_lens**.

Streamline

Use a **Streamline** plot in 2D ( ) or 3D ( ) to visualize a vector quantity. A streamline is a curve everywhere tangent to an instantaneous vector field. 3D streamline plot is analogous to the 2D streamline plot except that there is no height data setting and the starting point selection is different. In 3D, you can also use a Streamline Surface plot to plot streamlines on 3D surfaces. Add Deformation, Color Expression, Export Expressions, Filter, or Selection (Plot Attribute) subnodes as needed. Right-click a **2D Plot Group** or **3D Plot Group** to add these plots.

	Go to Common Results Node Settings for links to information about these sections: **Data**, **Expression**, **Title**, **Quality**, and **Inherit Style**.

	To get the length of the streamlines, use an **Export>Plot** node. In its **Settings** window, select the **Only export starting points and endpoints** check box to include one row with the starting point, the endpoint, and the length of the streamline for each streamline.

STREAMLINE POSITIONING

Select one of these options from the **Positioning** list: **On selected boundaries** (the default), **Starting-point controlled**, **Uniform density**, or **Magnitude controlled**. Then follow one of the methods described:

- Method 1: Specifying the Number of Streamlines and Start Boundaries
- Method 2: Specifying Points by Entering Coordinates
- Method 3: Selecting the Specified Number of Starting Points in the Geometry
- Method 4: Creating Streamlines with Uniform Density
- Method 5: Creating Streamlines with Variable Density and Magnitude Controlled

SELECTION

	The **Selection** section is available for some datasets when you select **On selected boundaries** from the **Positioning** list under **Streamline Positioning**.

Select the boundaries from which the streamlines start. By selecting in the **Graphics** window and using the tools in the **Selection** section, select the boundaries for the starting positions for the streamlines.

COLOR AND STYLE

In this section you can control the style and color of the streamlines and add arrows to them, if desired.

Line Style

Under **Line style**, choose **None**, **Line** (the default), **Ribbon**, or **Tube** from the **Type** list to determine the type of streamlines. If you choose **None**, no streamlines appear, but you can plot arrows that are tangential to the streamlines. If you choose **Ribbon**, then enter an expression for the ribbon width in the **Width expression** field (SI unit: m). If desired, you can also adjust the width by selecting the **Width scale factor** check box and enter a scale factor in the corresponding text field.

Point Style

Under **Point style**, you can add points or arrows and control their appearance.

From the **Type** list, choose **None** (the default) for no points or arrows, **Arrow** for static arrows that are tangential to the streamlines, **Interactive arrow** for arrows that are tangential to the streamlines and that can move along the streamlines with the local integration time, or **Interactive point** for points that can move along the streamlines with the local integration time.

If you choose **Arrow**, these additional settings are available:

- From the **Arrow distribution** list, choose **Equal arc length** (the default) to distribute the arrows uniformly over the streamlines' arc length, **Equal time** to distribute the arrows using the weight function $dt/d\mathrm{arc}$, or **Equal inverse time** to distribute the arrows using the weight function $d\mathrm{arc}/dt$.
- Select the **Number of arrows** check box to enter a number for the total number of arrows, on all streamlines, that are plotted. By default, the COMSOL Multiphysics software provides a reasonable number of arrows.

If you choose **Interactive arrow**, these additional settings are available:

- Specify a value in the **Local time** field (default: 0) for the local integration time along the streamlines for which the arrows are plotted. It is possible for integration times to be negative: For a starting point in the interior of a domain, streamlines are integrated both forward and backward in time unless you clear the **Allow backward time integration** check box in the **Advanced** section.
- You can move the arrows along the local time by moving the slider. You can also create this effect using a player animation in an **Animation** node under **Export**, using a **Streamline** sequence type.
- In the **Extra release times** field, enter any additional times for releasing arrows, or click the **Range** button ( ) to define the extra release times. By default, there are no extra times.

The following settings are available for both the **Arrow** and the **Interactive arrow** types:

- From the **Arrow type** list, choose **Arrowhead** (the default), **Arrow**, or **Cone**.
- From the **Arrow length** list, choose **Normalized** (the default), **Logarithmic**, or **Proportional** to make the arrows' sizes depend on the magnitude of the plotted quantity, if desired. If you choose **Logarithmic**, the length of the arrows is proportional to the natural logarithm of the magnitude of the quantity they represent. This makes arrows representing small values relatively larger. The value in the **Range quotient** field (default: 100) determines the ratio between the smallest and largest values in the range of values for the logarithmic arrow length.
- Use the slider, or select the **Scale factor** check box and enter a scale factor in the associated text field if you want to use another scaling than the one used by default.

If you choose **Interactive point**, these following settings are available:

- Specify a value in the **Local time** field (default: 0) for the local integration time along the streamlines for which the points are plotted. It is possible for integration times to be negative: For a starting point in the interior of a domain, streamlines are integrated both forward and backward in time unless you clear the **Allow backward time integration** check box in the **Advanced** section.
- You can move the points along the local time by moving the slider. You can also create this effect using a player animation in an **Animation** node under **Export**, using a **Streamline** sequence type.
- In the **Extra release times** field, enter any additional times for releasing points, or click the **Range** button ( ) to define the extra release times. By default, there are no extra times.
- Select or enter an expression for the points' radii in the **Point radius expression** field (SI unit: m). By default, the radius is scaled automatically. To enter a scale factor for the radius, select the **Radius scale factor** check box and enter a scale factor in the corresponding text field.
- Select the **Fixed size** check box if you want to display the points with a fixed onscreen size.

From the **Color** list, choose a color for the streamlines and arrows. Choose **Custom** to add a custom color using a color palette. This list is not available if you use a **Color Expression** subnode to define the colors for the streamlines.

ADVANCED

Define the following advanced streamline settings as needed.

Advanced Settings for the Streamline Plot

Under **Advanced**, set these general settings. See also Advanced Section Setting Effects.

- The **Integration tolerance** field default is 0.01 for 3D and 0.001 for 2D. Edit to specify how accurately streamlines are computed.
- The **Maximum streamline length** field makes it possible to control the length of streamlines. Edit the default (Inf) to control the streamlines' length. Enter the value as a fraction of the mean bounding box's size. When the **Allow backward time integration** check box is selected (the default), the maximum length refers to the sum of the lengths of the forward and backward parts.
- The **Maximum number of integration steps** field makes sure that the integration does not continue indefinitely. Edit the default (5000) to control when the computation stops.
- The **Maximum integration time** field sets an upper time limit for the integration. The default is infinity (inf).
- The **Stationary point stop tolerance** can be adjusted to make sure the integration stops near a stationary point in the field. The default is 0.01.
- The **Loop tolerance** field default is 0.01. This is a fraction of the mean of the lengths of the bounding box of the geometry. If a streamline gets closer to its starting point than this distance, the streamline snaps to its starting point and is plotted as a connected loop. See also Method 5: Creating Streamlines with Variable Density and Magnitude Controlled.
- Select the **Allow backward time integration** check box to integrate points from the starting points both in the direction of the vector field and in the opposite direction. This check box is selected by default.
- Select the **Normalize vector field** check box if required. The vector field is normalized pointwise: For each point where the field was evaluated, the vector is replaced by a unit vector in the same direction. If you apply normalization, the speed along the streamline changes. This change means that the other settings in the **Advanced** section (for example, maximum number of integration steps and maximum integration time) are interpreted differently.

STREAMLINE POSITIONING SECTION (CONTINUED)

Method 1: Specifying the Number of Streamlines and Start Boundaries

1 Under **Streamline Positioning**, from the **Positioning** list, select **On selected boundaries**.

	The **Selection** section is made available for some datasets when **On selected boundaries** is selected from the **Positioning** list under **Streamline Positioning**.

2 Under **Selection**, select the boundaries from which the streamlines start. By selecting in the **Graphics** window and using the tools in the **Selection** section, select the boundaries for the starting positions for the streamlines.

3 Enter the **Number** of streamlines (the default is 20). This number is a suggestion for how many streamlines are generated, but there is no guarantee that you get exactly the specified number of streamlines. The reason is that the streamline starting points are placed in a regular grid on the selected boundaries.

Method 2: Specifying Points by Entering Coordinates

1 Under **Streamline Positioning**, from the **Positioning** list, select **Starting-point controlled**.

2 Select **Coordinates** from the **Entry method** list.

3 Enter **x** and **y** (2D) or **x**, **y**, and **z** (3D) coordinates (SI unit: m). Also use a scalar value to represent a fixed value for some of the coordinates.

Method 3: Selecting the Specified Number of Starting Points in the Geometry

1 Under **Streamline Positioning**, from the **Positioning** list, select **Starting-point controlled**.

2 Select **Number of points** from the **Entry method** list.

3 Enter the number of **Points** (the default is 20).

4 From the **Along curve or surface list**, select **None**. The starting points are then distributed semirandomly but deterministically. You can also choose a **Cut Line**, **Cut Plane**, **Parameterized Curve** or **Parameterized Surface** dataset, if applicable, to restrict the streamline start positions to a cut line, cut plane, parametric curve, or parametric surface.

Method 4: Creating Streamlines with Uniform Density

The algorithm saturates the entire domain with evenly spaced streamlines.

1 Under **Streamline Positioning**, from the **Positioning** list, select **Uniform density**.

2 Enter the **Separating distance** between the streamlines (the default is 0.05).

The value for the separating distance is a fraction of the mean of the lengths of the bounding box of the geometry. In this case, a streamline stops whenever it gets too close to another streamline or itself (or if any of the general termination criteria specified in the **Advanced** section is fulfilled).

3 The **Advanced parameters** list defaults to **Automatic**. If required, select **Manual** to edit these parameters: **Boundary element refinement**, **Fraction of streamline length to ignore**, **Starting distance factor**, **Terminating distance factor**, or **First starting point**.

- Edit the **Boundary element refinement** if streamlines do not behave as expected near boundaries on a coarse mesh — try increasing this number. It is a measurement of the density of points on the boundaries used to set up the structure and is used to measure distances between streamlines. Refining the mesh in the problematic area can also resolve the problem.
- Edit the value in the **Fraction of streamlines to ignore** field (a fraction 0–1; default value: 0.5) when a streamline is close to itself, typically for spiraling streamlines. This number controls how big part of the streamline, starting from its starting point, that the streamline itself is allowed to get close to, and it might in some cases be useful in order to get a less cluttered streamline plot.
- The **Starting distance factor** is a factor multiplied with the distance specified in the **Separating distance** field (as a fraction of the mean of the lengths of the bounding box of the geometry — the default value is 0.05). It sets the minimum distance between streamlines and the starting point for the next streamline.

  When the domain is close to be saturated with streamlines, new starting points tend to be positioned where the streamline has nowhere to go before it gets too close other streamlines, resulting in short streamlines. The higher the value of this factor, the more it disqualifies the starting point and thus reduces the number of short streamlines.
- The **Terminating distance factor** is a factor multiplied with the distance specified in the **Separating distance** field. It sets the minimum distance between any pair of streamlines. Thus, this distance is the minimal distance under which the integration of a streamline stops.
- By default the **First starting point** list defaults to **Automatic**, and it sets the starting point for the first streamline. It is selected in the element where the highest value of the velocity of the specified vector field occurs. If required, select **Manual** instead to override the default and enter **x** and **y** coordinates.

Method 5: Creating Streamlines with Variable Density and Magnitude Controlled

To create streamlines with a variable density according to the magnitude of the specified vector field:

1 Under **Streamline Positioning**, from the **Positioning** list, select **Magnitude controlled**.

The **Magnitude controlled** setting gives proper streamline plots only for incompressible flow fields. In this case, the algorithm places the streamlines so that the flow between each pair of adjacent streamlines is the same throughout the domain, giving streamlines that are more dense where the magnitude of the field is high.

2 This step depends if it is a 2D or 3D Component.

	For 2D models, enter a **Density** (the default is 20). This value is roughly the number of streamlines. Prior to streamline generation, the software computes a rough estimate of the total flow of the flow field in the model, divides this value with the specified **Density** setting, and uses the resulting value as the flow between each pair of adjacent streamlines.

	For 3D models, enter the **Min** (minimum) **distance** and **Max** (maximum) **distance** between streamlines (the default **Min distance** is 0.05 and the default **Max distance** is 0.15). These distances are specified as fractions of the mean of the lengths of the bounding box of the geometry. The minimum velocity in the model is mapped to the minimum distance and the maximum velocity to the maximum distance. Thus every point on a streamline and on the boundary has a separating distance associated with it. Given a set of streamlines, the starting point for the next streamline is selected using these separating distances.

A streamline stops only if it exits the domain or gets too close to its own starting point, using the **Loop tolerance** option in the **Advanced** section (or if any of the general termination criteria specified in the **Advanced** section is fulfilled).

3 If required, from the **Advanced parameters** list, select **Manual** to set advanced parameters as described in Method 4: Creating Streamlines with Uniform Density.

ADVANCED SECTION SETTING EFFECTS

The **Advanced** settings have the following effects:

- When calculating streamlines, the software selects a set of starting points (controlled by the streamline starting points and the number of starting points).
- The algorithm then finds the vectors of the given vector field at these points by interpolation. It normalizes the vector field if that option is selected.
- The algorithm integrates the points along the direction of the vector using the integration tolerance using a second-order Runge-Kutta algorithm.
- At the new positions, the algorithm finds vector values by interpolation and performs another integration.

This process stops if:

- It reaches a predetermined number of integration steps (controlled by the maximum number of integration steps entry).
- The points end up outside the geometry.
- The points reach a “stationary point” where the vector field is zero. Control the meaning of “zero” with the stationary point stop tolerance.
- It has used a predetermined amount of “time” for integrating (control this parameter with the **Maximum integration time** field).

Finally, the software connects the calculated points for each streamline consecutively with straight lines.

	When integrating, the software uses a pseudo-time that has nothing to do with the time in time-dependent problems. Use the massless particle tracing tool to integrate in time-varying fields and to control the real time in stationary fields.

Streamline Surface

Use a **Streamline Surface** plot in 3D ( ) to visualize a vector quantity on surfaces. A streamline is a curve everywhere tangent to an instantaneous vector field. Add Deformation, Color Expression, Export Expressions, or Filter subnodes as needed. Right-click a **3D Plot Group** to add these plots from the **More Plots** submenu.

	Go to Common Results Node Settings for links to information about these sections: **Data**, **Expression**, **Title**, **Quality**, and **Inherit Style**.

	To get the length of the streamlines, use an **Export>Plot** node. In its **Settings** window, select the **Only export starting points and endpoints** check box to include one row with the starting point, the endpoint, and the length of the streamline for each streamline.

SELECTION

In this section, select the surfaces on which to compute and plot the streamlines (the selected surfaces are not the boundaries where the streamlines should start). The selected surfaces must form a plane. By selecting in the **Graphics** window and using the tools in the **Selection** section, select the boundaries (surfaces) on which you want to plot streamlines.

STREAMLINE POSITIONING

Select one of these options from the **Positioning** list: **Starting-point controlled** (the default), **Uniform density**, or **Magnitude controlled**. Then follow one of the methods described:

- Method 1: Selecting the Specified Number of Starting Points in the Geometry
- Method 2: Creating Streamlines with Uniform Density
- Method 3: Creating Streamlines with Variable Density and Magnitude Controlled

COLOR AND STYLE

In this section you can control the style and color of the streamlines and add arrows to them, if desired.

Line Style

Under **Line style**, choose **None**, **Line** (the default), or **Tube** from the **Type** list to determine the type of streamlines. If you choose **None**, no streamlines appear, but you can plot arrows that are tangential to the streamlines.

Arrow Style

Under **Arrow style**, you can add arrows and control their appearance.

From the **Type** list, choose **None** (the default) for no arrows, or choose **Tangent** for arrows that are tangential to the streamlines. If you choose **Tangent**, these additional settings are available:

- From the **Arrow distribution** list, choose **Equal arc length** (the default) to distribute the arrows uniformly over the streamlines' arc length, **Equal time** to distribute the arrows using the weight function $dt/d\mathrm{arc}$, or **Equal inverse time** to distribute the arrows using the weight function $d\mathrm{arc}/dt$.

- Select the **Number of arrows** check box to enter a number for the total number of arrows, on all streamlines, that are plotted. By default, the COMSOL Multiphysics software provides a reasonable number of arrows.
- From the **Arrow type** list, choose **Arrowhead** (the default), **Arrow**, or **Cone**.
- From the **Arrow length** list, choose **Normalized** (the default), **Logarithmic**, or **Proportional** to make the arrows' sizes depend on the magnitude of the plotted quantity, if desired.
- Use the slider, or select the **Scale factor** check box and enter a scale factor in the associated text field if you want to use another scaling than the one used by default.

From the **Color** list, choose a color for the streamlines and arrows. Choose **Custom** to add a custom color using a color palette.

ADVANCED

Define the following advanced streamline settings as needed.

Advanced Settings for the Streamline Plot

Under **Advanced**, set these general settings. See also Advanced Section Setting Effects.

- The **Integration tolerance** field default is 0.001. Edit to specify how accurately streamlines are computed.
- The **Maximum streamline length** field makes it possible to control the length of streamlines. Edit the default (Inf) to control the streamlines' length. Enter the value as a fraction of the mean bounding box's size. When the **Allow backward time integration** check box is selected (the default), the maximum length refers to the sum of the lengths of the forward and backward parts.
- The **Maximum number of integration steps** field makes sure that the integration does not continue indefinitely. Edit the default (5000) to control when the computation stops.
- The **Maximum integration time** field sets an upper time limit for the integration. The default is infinity (inf).
- The **Stationary point stop tolerance** can be adjusted to make sure the integration stops near a stationary point in the field. The default is 0.01.
- The **Loop tolerance** field default is 0.01. This is a fraction of the mean of the lengths of the bounding box of the geometry. If a streamline gets closer to its starting point than this distance, the streamline snaps to its starting point and is plotted as a connected loop. See also Method 5: Creating Streamlines with Variable Density and Magnitude Controlled.
- Select the **Allow backward time integration** check box to integrate points from the starting points both in the direction of the vector field and in the opposite direction. This check box is selected by default.
- Select the **Normalize vector field** check box if required. The vector field is normalized pointwise: For each point where the field was evaluated, the vector is replaced by a unit vector in the same direction. If you apply normalization, the speed along the streamline changes. This change means that the other settings in the **Advanced** section (for example, maximum number of integration steps and maximum integration time) are interpreted differently.

STREAMLINE POSITIONING SECTION (CONTINUED)

Method 1: Selecting the Specified Number of Starting Points in the Geometry

1. Under **Streamline Positioning**, from the **Positioning** list, select **Starting-point controlled**.
2. Enter the number of **Points** (the default is 20).

Method 2: Creating Streamlines with Uniform Density

The algorithm saturates the entire surface with evenly spaced streamlines.

1. Under **Streamline Positioning**, from the **Positioning** list, select **Uniform density**.

2 Enter the **Separating distance** between the streamlines (the default is 0.05).

The value for the separating distance is a fraction of the mean of the lengths of the bounding box of the geometry. In this case, a streamline stops whenever it gets too close to another streamline or itself (or if any of the general termination criteria specified in the **Advanced** section is fulfilled).

3 The **Advanced parameters** list defaults to **Automatic**. If required, select **Manual** to edit these parameters: **Boundary element refinement**, **Fraction of streamlines to ignore**, **Starting distance factor**, or **Terminating distance factor**.

- Edit the **Boundary element refinement** if streamlines do not behave as expected near edges on a coarse mesh — try increasing this number. It is a measurement of the density of points on the edges used to set up the structure and is used to measure distances between streamlines. Refining the mesh in the problematic area can also resolve the problem.
- Edit the value in the **Fraction of streamlines to ignore** field (a fraction 0–1; default value: 0.5) when a streamline is close to itself, typically for spiraling streamlines. This number controls how big part of the streamline, starting from its starting point, that the streamline itself is allowed to get close to, and it might in some cases be useful in order to get a less cluttered streamline plot.
- The **Starting distance factor** is a factor multiplied with the distance specified in the **Separating distance** field (as a fraction of the mean of the lengths of the bounding box of the geometry — the default value is 0.05). It sets the minimum distance between streamlines and the starting point for the next streamline.

  When the surface is close to be saturated with streamlines, new starting points tend to be positioned where the streamline has nowhere to go before it gets too close other streamlines, resulting in short streamlines. The higher the value of this factor, the more it disqualifies the starting point and thus reduces the number of short streamlines.
- The **Terminating distance factor** is a factor multiplied with the distance specified in the **Separating distance** field. It sets the minimum distance between any pair of streamlines. Thus, this distance is the minimal distance under which the integration of a streamline stops.

Method 3: Creating Streamlines with Variable Density and Magnitude Controlled

To create streamlines with a variable density according to the magnitude of the specified vector field:

1 Under **Streamline Positioning**, from the **Positioning** list, select **Magnitude controlled**.

The **Magnitude controlled** setting gives proper streamline plots only for incompressible flow fields. In this case, the algorithm places the streamlines so that the flow between each pair of adjacent streamlines is the same throughout the surface, giving streamlines that are more dense where the magnitude of the field is high.

2 Enter a **Density** (the default is 20). This value is roughly the number of streamlines. Prior to streamline generation, the software computes a rough estimate of the total flow of the flow field in the model, divides this value with the specified **Density** setting, and uses the resulting value as the flow between each pair of adjacent streamlines.

3 If required, from the **Advanced parameters** list, select **Manual** to specify the **Boundary element refinement** as described in Method 2: Creating Streamlines with Uniform Density.

ADVANCED SECTION SETTING EFFECTS

The **Advanced** settings have the following effects:

- When calculating streamlines, the software selects a set of starting points (controlled by the streamline starting points and the number of starting points).
- The algorithm then finds the vectors of the given vector field at these points by interpolation. It normalizes the vector field if that option is selected.
- The algorithm integrates the points along the direction of the vector using the integration tolerance using a second-order Runge-Kutta algorithm.

- At the new positions, the algorithm finds vector values by interpolation and performs another integration.

This process stops if:

- It reaches a predetermined number of integration steps (controlled by the maximum number of integration steps entry).
- The points end up outside the geometry.
- The points reach a "stationary point" where the vector field is zero. Control the meaning of "zero" with the stationary point stop tolerance.
- It has used a predetermined amount of "time" for integrating (control this parameter with the **Maximum integration time** field).

Finally, the software connects the calculated points for each streamline consecutively with straight lines.

	When integrating, the software uses a pseudo-time that has nothing to do with the time in time-dependent problems. Use the massless particle tracing tool to integrate in time-varying fields and to control the real time in stationary fields.

Surface (Plot)

Use a **Surface** plot to display a quantity on a domain in 2D ( ) or on a boundary in 3D ( ). Add Deformation, Filter, Selection (Plot Attribute), or Height Expression (2D only) subnodes as needed. Right-click a **2D Plot Group** or **3D Plot Group** to add a **Surface** plot. You can also create a **Surface** plot from the **Evaluation Group** contextual ribbon toolbar for plotting an evaluation group.

	• Go to Common Results Node Settings for links to information about these sections: **Data**, **Expression**, **Title**, **Range**, **Coloring and Style**, **Quality**, and **Inherit Style**. • 2D Plot Group and 3D Plot Group • Plot Groups and Plots

Surface Data

A **Surface Data** plot node appears in 2D ( ) and 3D ( ) plot groups if you run a method that creates a `SurfaceData` plot.

	It is not possible to add a **Surface Data** node from the model tree or toolbars in the COMSOL Desktop. It is only available from the COMSOL Multiphysics API and if you run a method from the **Developer** toolbar. See SurfaceData in the *COMSOL Multiphysics Programming Reference Manual*.

DATA

In the **Data** section, the number of points in the data and the number of triangles in the plot are listed.

	Go to Common Results Node Settings for a link to information about the **Title**, **Range**, and **Coloring and Style** sections.

Surface Slit

Use a **Surface Slit** plot to display a quantity that is the result of evaluating one expression on one side and another expression on the other side of a boundary in 3D ( ). When you add an expression to plot as a surface slit plot, and it is possible to evaluate it in the surrounding domains, you can use the `up` and `down` operators (see up and down) on each side of the boundary to evaluate an expression's values on the upside and downside, respectively.

Add Deformation, Filter, or Selection (Plot Attribute) subnodes as needed. Right-click a **3D Plot Group** to add a **Surface Slit** plot from the **More Plots** submenu.

- Go to Common Results Node Settings for links to information about these sections: **Data**, **Title**, **Range**, **Coloring and Style**, **Quality**, and **Inherit Style**. From the **Dataset** list, only Solution, Surface, and Mesh datasets are available.
- 2D Plot Group and 3D Plot Group
- Plot Groups and Plots

EXPRESSION ON THE UPSIDE

See Expressions and Predefined Quantities for information about the settings for defining an expression to plot on the upside of the boundary.

EXPRESSION ON THE DOWNSIDE

See Expressions and Predefined Quantities for information about the settings for defining another expression to plot on the downside of the boundary.

For exterior boundaries, the upside is the side toward the outside of the geometry. For interior boundaries, see Tangent and Normal Variables.

If your license includes the Electrodeposition Module, see the following model for an example of the use of Surface Slit plots: *Electrocoating of a Car Door*: Application Library path **Electrodeposition_Module/Tutorials/car_door**.

Table Graph

Add a **Table Graph** ( ) plot to display data from a table with one line per output column. Right-click a **1D Plot Group**, **Polar Plot Group**, or **Smith Plot Group** to add this plot type. First define a table to plot. This plot is also available from the plot groups' contextual ribbon toolbars, by clicking **Graph Plot** on the **Evaluation Group** contextual ribbon toolbar (to plot the evaluation group in graph plot), or by selecting **Table Graph** ( ) from the **Table** window's toolbar.

Go to Common Results Node Settings for links to information about the **Coloring and Style** section.

DATA

From the **Source** list, choose **Table** or **Evaluation group**, and then choose a table or evaluation group table with the data that you want to plot as a surface plot from the list below.

From the **x-axis data** list (or θ **angle data** for polar plots), select the column to use as x-axis, select **Row index** to use the table's row indexes (row numbers) as x-axis, or leave it at **Automatic** to let the software determine the input from the data in the table.

The **Plot columns** list controls which columns to plot. **All excluding x-axis** (or **All excluding θ angle list** for polar plots) indicates all columns not used in **x-axis data** (or θ **angle data**). Select **Manual** instead to specify which columns to plot in the **Columns** list.

If available, select a **Transformation** of the data from the table — **None** (the default) to use the data directly without any transformation, or select **Frequency spectrum** to use an FFT (fast Fourier transform) to transform the data from a time-dependent solution to the frequency domain.

If **Frequency spectrum** is selected, the default number of frequencies and frequency range depend on the data, and usually those values do not need changing, but if desired, you can specify these values manually:

- Select the **Number of frequencies** check box and enter a value in the associated field (the default is based on the number of time samples).
- Select the **Frequency range** check box and then enter the bounds of the frequency range in the **Minimum** and **Maximum** fields (in Hz). The FFT algorithm uses resampling based on linear interpolation. The x-axis shows the frequency (in Hz). By default, the y-axis shows the unscaled Fourier coefficients.
- Select the **Scale** check box to scale the values on the y-axis so that their magnitude reflects the magnitude of the original signal. The values then have the same unit as the input data for the FFT. The y-axis title includes the unit if all expressions represented on the y-axis have the same unit. The scaling makes the magnitude at 0 Hz equal to the bias or DC component of the original signal. For a pure sinusoid, the scaled value is the peak magnitude divided by the square root of 2 ($u_{\max}/\sqrt{2}$).

By default, table plots only display the real data in a table, just as other plot types display real data unless you use the `imag` function in the expression. To display the imaginary part of complex-valued data in a table, when available, select the **Plot imaginary part** check box. This option is only available when a transformation to the frequency domain is not used.

In the settings for a **Smith Plot Group**, this section includes a **Data interpretation** list, where you can choose **Reflection** (the default), **Impedance**, or **Admittance**.

Y-AXIS

	This section is only available if the **Two y-axes** check box is selected in the **Plot Settings** section of the parent **1D Plot Group** node's **Settings** window.

Select the **Plot on secondary y-axis** check box to plot the y-axis data on the secondary y-axis to the right of the plot instead of the primary y-axis to the left of the plot.

PREPROCESSING

This section contains settings to preprocess the data in the table graph by scaling and shifting the data values, which can be useful to match data from different sources or to scale some data to express the values in another unit, for example.

Under **x-axis column** and **y-axis column**, from the **Preprocessing** list select:

- **None** (the default), for no preprocessing of the data.
- **Linear**, to preprocess the data using a linear transformation of the data values for the x- or y-axis column. You define the linear preprocessing with values for the scaling (default: 1) and the shift or offset (default: 0) in the **Scaling** and **Shift** fields, respectively. The default values do not change the original data values.

LEGENDS

Select the **Show legends** check box to display the plotted expressions to the right of the plot. In plots where each line represents a certain time value, eigenvalue, or parameter value, these values are also displayed.

When **Automatic** is selected from the **Legends** list (the default), the legend texts appear automatically. You can add a prefix or a suffix to the automatic legend text in the **Prefix** and **Suffix** fields. If **Manual** is selected from the **Legends** list, enter your own legend text into the table.

Table Surface

Use a **Table Surface** ( ) plot to visualize the data in a table that represents a matrix of values that are functions of two independent parameters (for example, as a response surface plot). See Creating a Surface Plot of Values as Functions of Two Parameters below. Right-click a **2D Plot Group** to add this plot type from the **More Plots** submenu. This plot is also available by selecting **Table Surface** ( ) from the **Table** window's toolbar.

	Go to Common Results Node Settings for links to information about these sections: **Title**, **Range**, **Coloring and Style**, and **Inherit Style**.

	When created from the **Table** window toolbar, the 2D plot group with the **Table Surface** plot uses **None** in the **Dataset** selection. When you add a Table Surface plot to an existing or new 2D plot group, the dataset is typically a solution dataset, and the plot group includes a plot of the dataset edges. This can make the table surface plot hard to see because it uses parameter values on the x- and y-axis and not the 2D geometry's dimension.

Creating a Surface Plot of Values as Functions of Two Parameters

Follow these steps to create a surface plot of values of some quantity as a function of two parameters, where you vary two parameters in a parametric sweep while keeping the other parameters fixed:

1. In the **Study** branch, add a **Parametric Sweep** ( ) node.
2. In the **Settings** window for **Parametric Sweep**, add the parameters that you want to sweep to the parameter list.
3. Select **All combinations** from the **Sweep type** list to get a full parametric sweep of all parameter values.
4. Solve the model.
5. Add a **Point Evaluation** ( ) node under **Derived Values**, select a point where you want to evaluate the solution data, and click **Evaluate**. A table is created.
6. In the **Table** window, click the **Table Surface** ( ) button.
7. In the **2D Plot Group**, select the **Table Surface** node. In its **Settings** window you can select which parameter to plot on the x-axis and on the y-axis, and which values you want to select as fixed for the other parameters.

DATA

From the **Source** list, choose **Table** or **Evaluation group**, and then choose a table or evaluation group table with the data that you want to plot as a surface plot from the list below.

From the **Data format** list, select one of the following formats for interpreting the table data:

- Select **Filled table** if the data is structurally filled (for tables only; this option is not available for evaluation groups). See Filled Table for additional settings for this data format.

- Select **Columns** if you want to specify what columns to take the data from. See Columns for additional settings for this format.
- Select **Cells** to treat the tables data as cells in a matrix and use the table row and column numbers as the x- and y-coordinates, respectively. There are no additional settings for this format.

Filled Table

Select an option from the **Plot data** list: **From table** (the default) or **Manual**. If **Manual** is selected, select options from the **x-axis data** and **y-axis data** lists, which contain the parameters that define the rows and columns for the table's matrix data, and from the **Data** list, which corresponds to the **Data** list in the **Table** node for the matrix data. If there are additional parameters in a parametric sweep, they need to be kept at fixed values, which you select from the **Parameter value** list, which contains all combinations of parameter values for the parameters that are not used as x-axis or y-axis data.

Columns

From the **x-axis column**, **y-axis column**, and **Data column** lists, choose the columns to use for the x-axis, y-axis, and the data, respectively.

For all data formats, select the **Plot imaginary part** check box if you want to plot the imaginary part of complex-valued data. For real-valued data, that plot shows a zero imaginary part.

PREPROCESSING

This section contains settings to preprocess the data in the table surface plot by scaling and shifting the data values, which can be useful to match data from different sources or to scale some data to express the values in another unit.

Under **x-axis column**, **y-axis column**, and **Data column**, from the **Preprocessing** list select:

- **None** (the default), for no preprocessing of the data.
- **Linear**, to preprocess the data using a linear transformation of the data values for the x- or y-axis column or the data column. You define the linear preprocessing with values for the scaling (default: 1) and the shift or offset (default: 0) in the **Scaling** and **Shift** fields, respectively. The default values do not change the original data values.

Through Thickness

Use a **Through Thickness** ( ) plot to display the variation of a layered shell quantity in its thickness direction at specified points. Add Color Expression and Filter subnodes as needed. Right-click a **1D Plot Group** to add this plot type from **More Plots** submenu.

	Go to Common Results Node Settings for links to information about these sections: **Title**, **Coloring and Style**, and **Legend**.

	The Layered Material Slice plot requires the Composite Materials Module, AC/DC Module, or Heat Transfer Module.

DATA

From the **Source** list, choose **Solution** or **Cut Point 3D** dataset. In case of **Solution** dataset, specify the evaluation positions on a layered shell in **Position** and **Selection** sections.

POSITION

When **Solution** is selected as a **Dataset**, this section displays. Select **Position**: **Selection** (the default), or **Point coordinates**.

In case **Selection** option is chosen, select one or more geometric points from the Graphics window. Alternatively, select **Point coordinates** to specify the material coordinates of an array of points.

SELECTION

When **Position** is selected as a **Selection**, this section displays. Select **Manual** from the **Selection** list to choose geometry directly from the **Graphics** window. Select **All** to add the applicable geometry or any other predefined grouping.

X-AXIS DATA

The **X-Axis Data** section is same as that of **Y-Axis Data** section of a Line Graph.

Y-AXIS DATA

For **Parametric Sweep** studies, for each pair of outer solutions or inner solutions, one line is plotted on the graph. For example, if there are 10 outer solutions and each outer solution has five inner solutions, then 50 lines are drawn. The number of inner solutions can vary between outer solutions.

Select **Thickness coordinate** from the **Parameter** list to visualize along the through-thickness direction of a layered shell, or select **Expression** to change the through-thickness coordinate expression. If **Thickness coordinate** is selected, you can choose an appropriate length unit from the **Unit** list. If **Expression** is selected, go to Expressions and Predefined Quantities.

Under **Interface positions**, choose an option from the **Show interface positions** list to enable display of horizontal lines to indicate the positions of the interfaces between layers:

- With the default option, **None**, no interface positions are displayed.
- Choose **All interfaces** to display horizontal lines to indicate the positions of all interfaces between layers.
- Choose **Interfaces between layered materials** to display horizontal lines to indicate the positions of interfaces between layered materials only.

COLORING AND STYLE

For other settings, see Common Results Node Settings.

Under **Interface positions**, the following settings are available for the line style and color of the horizontal lines representing the interface positions:

From the **Line** list, choose a line style: **Solid**, **Dotted** (the default), **Dashed**, or **Dashed-dot**.

From the **Color** list, choose one of the predefined colors (default: **Magenta**), or choose **Custom** to define a custom color using the color palette that appears.

QUALITY

The **Quality** section in the through thickness plot is similar to the one in a Line Graph. The only difference is in the **Smoothing**, which can only be turned off (the default) or on compared to the Line Graph, in which you get more options.

Tube Data

A **Tube Data** plot node appears in 2D ( ) and 3D ( ) plot groups if you run a method that creates a `TubeData` plot.

	It is not possible to add a **Tube Data** node from the model tree or toolbars in the COMSOL Desktop. It is only available from the COMSOL Multiphysics API and if you run a method from the **Developer** toolbar. See TubeData in the *COMSOL Multiphysics Programming Reference Manual*.

DATA

In the **Data** section, the number of points in the data and the number of line segments in the plot are listed.

	Go to Common Results Node Settings for a link to information about the **Title**, **Range**, and **Coloring and Style** sections.

Volume

Use a **Volume** ( ) plot to display a quantity inside a domain in 3D. Add Deformation, Filter, or Selection (Plot Attribute) subnodes as needed. Right-click a **3D Plot Group** to add this plot.

	Go to Common Results Node Settings for links to information about these sections: **Data**, **Expression**, **Title**, **Range**, **Coloring and Style**, **Quality**, **Element Filter**, **Shrink Elements**, and **Inherit Style**.

Waterfall

Use a **Waterfall** ( ) plot to create a waterfall diagram, which is a plot that can illustrate how an expression depends on two parameters in a sweep. The waterfall is plotted as a 3D plot in which z-axis represents the response amplitude and x- and y-axis represent, for example, the frequency and the rotor rpm, respectively. Add a Color Expression subnode as needed. Right-click a **3D Plot Group** to add this plot.

	Go to Common Results Node Settings for links to information about these sections: **Expression**, **Title**, and **Inherit Style**.

DATA

Choose the dataset for the data to use in the waterfall plot from the **Dataset** list. Depending on the selected study type, you can further select the times, parameters, or eigenfrequencies to use.

SELECTION

Here you select the points for which to plot a waterfall plot. From the **Selection** list, select **Manual** to select points directly in the Graphics window or in the list below, or select **All points**.

X-AXIS DATA AND Y-AXIS DATA

In the **x-Axis Data** and **y-Axis Data** sections, specify what those axes represent by entering an expression (for example, `freq` for the frequency) in the **Expression** field. In addition, choose a compatible unit from the **Unit** list and select the **Description** check box to add a description of the expression in the associated text field. Click the **Replace Expression** ( ) or **Insert Expression** ( ) button to select predefined expressions to use in the **Expression** field.

COLORING AND STYLE

From the **Style** list, choose **Line** to only plot the waterfall diagram using lines, **Surface** to only plot it as a surface plot, or **Both** to use lines and a surface plot. For **Surface** and **Both**, you can also choose the color table to use for the surface plot from the **Color table** list.

Whirl

Use a **Whirl** ( ) plot to create a plot of the mode shapes of rotors that are rotated about the rotors' axes at discrete rotation intervals. The whirl plot varies the phase shift between 0 and 360 degrees. That phase shift is relative to the phase defined in the dataset used for the plot. This plot requires the Rotordynamics Module. Add a Color Expression subnode as needed. Right-click a **3D Plot Group** to add this plot form the **More Plots** submenu.

	Go to Common Results Node Settings for links to information about these sections: **Data**, **Expression**, **Title**, **Quality**, and **Inherit Style**.

SELECTION

Here you select the edges on which to plot a whirl plot. From the **Selection** list, select **Manual** to select edges directly in the Graphics window or in the list below, or select **All edges**.

COLORING AND STYLE

By default the scaling of the whirl plot is automatic. Select the **Scale factor** check box and enter a scale factor in the associated text field if you want to use another scaling.

You can customize the whirl plot by changing the number of planes and rings in the plot. Enter a positive integer (or 0 for no planes or rings) in the **Number of planes** or **Number of rings** field. For the planes, select the colors to use as a color table from the **Color table** list. For the rings, select a color from the **Color ring** list (or choose **Custom** to define another color). Also, for the tubes (one for each plane), enter a **Tube radius expression** for the radius of the tube; click the **Replace Expression** button ( ) to select a predefined expression to replace the current expression, or press Ctrl+Space to insert a predefined expression (SI unit: m). If needed, select the **Radius scale factor** check box to enter a scale factor in the associated text field.

Color Expression

Use a **Color Expression** node ( ) to add coloring (according to an expression that you define) to the shapes or lines defined by a plot. You can add this subnode to the following plot types: Line Graph, Point Graph, Global, Nyquist, Arrow Volume, Arrow Surface, Arrow Line, Contour, Isosurface, Particle Trajectories, Streamline, Admittance Graph, Impedance Graph, Reflection Graph, Spot Diagram, Waterfall, Whirl.

In the **Model Builder**, add and define a plot group. Right-click the plot node (for example, **Streamline**) and select **Color Expression**.

	Go to Common Results Node Settings for links to information about these sections: **Expression**, **Title**, **Range**, and **Coloring and Style**.

Deformation

Add a **Deformation** node ( ) to deform the plot according to a vector quantity — for example, the displacement field in structural mechanics. You can add a deformation to most 2D and 3D plots: annotation, arrow, contour,

isosurface, line, slice, streamline, surface, and volume plots. By default, COMSOL Multiphysics scales the deformation to 10% of the geometry.

	The default scaling often uses a scale factor that is much larger than 1, which means that plotted deformation is exaggerated to clearly show the deformed shape. Use a scale factor of 1 to plot the actual deformation in a structural mechanics simulation, for example.

In the **Model Builder**, add and define a **2D Plot Group** or **3D Plot Group**. Right-click the plot node (for example, **Arrow Surface**) and select **Deformation**.

SCALE

Select the **Scale factor** check box to edit the default value for the scale factor.

	Using a scale factor of 1 and equidistant displacements in the x, y, or z direction, you can plot several instances of the geometry side by side to, for example, visualize the solution at some times, for some parameter values, or to illustrate multiple eigenmodes. In such a plot, you would typically specify the dataset in each plot individually and turn off the color legends and titles for each separate plot.

ADVANCED

To control the automatic scaling of the deformation, you can change the value in the **Maximum relative deformation** field from the default 0.1 (that is, 10% of the geometry) to another scalar, positive value. If you use a manual scale factor in the **Scale** section above, the maximum relative deformation setting is not applicable.

	Go to Common Results Node Settings for links to information about these sections: **Expression** and **Title**.

Export Expressions

Add an **Export Expressions** ( ) subnode to these 2D and 3D plots: streamline, streamline surface, radiation pattern, particle trajectories, point trajectories, and ray trajectories. Use the **Export Expressions** subnode to add expressions for additional quantities to include in plot data export for those plots. For example, you can use it to evaluate and export several expressions on streamlines or to add the frequency as an additional expression for the data export from a far-field plot.

EXPRESSIONS

In the table in this section, add the expressions that you want to export in addition the data in the plot (including an optional description). See Expressions and Predefined Quantities for more information about how to add expressions to the table. The values of the added expressions appear in **Export** columns to the right of the columns with the plot data when exporting that data to a file.

Filter

Add a **Filter** ( ) subnode to the following 1D, 2D, and 3D plots: arrow, contour, global, isosurface, line graph, line plot, point graph, slice, volume, max/min, Nyquist, admittance graph, impedance graph, reflection graph, and through thickness plots. Filters make it possible to filter (limit) the plot using a logical expression that provides a criterion for which parts of the plot to include. In the **Model Builder**, add and define a plot group with one or more plot nodes. Right-click the plot node (for example, a 2D **Surface**) and select **Filter**.

ELEMENT SELECTION

Under **Element Selection**, enter a **Logical expression for inclusion**. Enter any logical expression using predefined variables and unit syntax if desired. For example, `x>2[cm]` filters the plot to only include the part of the geometry where $x > 2$ cm. In 1D, the filter is applied to the points on the curves plotted using the plot node to which you add a **Filter** subnode. The filter is applied in the same way to all expressions that are plotted. Click the **Replace Expression** ( ) or **Insert Expression** ( ) button to select predefined expressions for the logical expression.

In 2D and 3D, and if the plot uses a Solution or Mesh dataset, you can also select the **Element nodes to fulfill expression**: **All**, **At least one**, **At least one but not all**, or **Smooth** (the default):

- Using the default setting, **Smooth**, edges of the filter domain become smooth instead of consisting of entire elements. For this setting, select the **User derivatives** check box to use cubic (Hermite) interpolation in the smooth plot filter. Using derivatives can improve the plot if the expression that is plotted is not approximated well over each element by a linear function.
- Select **All** to include all elements for which all element nodes (that is, the entire element) fulfill the criterion in the logical expression.
- Select **At least one** to include all elements for which at least one element node fulfills the criterion in the logical expression (that is, elements that fully or partially fulfill the expression).
- Select **At least one but not all** to include all elements for which at least one of the element nodes, but not all of them, fulfill the criterion in the logical expression. The last option is useful for making a filter that shows the plot for a zone around a boundary where the logical expression becomes true.

For the **Filter** nodes under the **Point Graph**, **Global**, **Nyquist**, **Admittance Graph**, **Impedance Graph**, and **Reflection Graph** nodes, this section is called **Point Selection** because the filtering is done for points rather than elements.

Height Expression

The **Height Expression** subnode ( ) introduces 3D height to some 2D plots. Add it to make the height of the plot represent the plotted quantity or some other expression. 2D Surface, 2D Contour, 2D Line, and 2D Table Surface plots support the Height Expression attribute. In the **Model Builder**, add and define a 2D **Surface**, **Contour**, **Line**, **Table Surface**, **Histogram**, **Matrix Histogram**, or **Optical Aberration** plot; then right-click the plot node and select **Height Expression**.

As a subnode to 2D Histogram ( ), Table Surface ( ), and Optical Aberration ( ) plots, the **Settings** window for **Height Expression** does not have an **Expression** section and only **Automatic**, **Manual**, and **None** are available as a **Title type**. Also, as a subnode for Table Surface ( ) plots, the **Settings** window for **Height Expression** includes a **Data** section and a **Preprocessing** section.

EXPRESSION

Under **Expression**, the **Height data** defaults to **From parent** to use the same dataset as the parent plot it belongs to. If **Expression** is selected instead, see Expressions and Predefined Quantities. This section is not available for the **Height Expression** node when added under an **Optical Aberration** node.

DATA

When added to a **Table Surface** node where the data format is a filled table or determined by picking columns, you can select **Data** instead of **From parent** (the default setting) from the **Height data** list (this option is also available for the data format where the table data are treated as cells, but then the only option is to plot the imaginary part).

Filled Table

With this data format, you can select the data to use for the height from the **Data** list, if applicable.

Columns

With this data format, you can choose the data column to use for the height from the **Data column** list.

To plot the imaginary part of the height data instead of the real part, select the **Plot imaginary part** check box.

PREPROCESSING

When added to a **Table Surface** node, you can use the settings in this section to scale the height data (for example, to convert the values to another unit).

From the **Preprocessing** list, choose **Linear** to apply a linear scaling and shift in the **Scaling** and **Shift** fields, respectively. The default values — a scaling factor of 1 and a shift of 0 — do not change the values of the height data.

TITLE

Select a **Title type**: **Automatic** (the default), **Custom**, **Manual**, or **None**.

AXIS

For a manual scaling of the height data, select the check box and enter a **Scale factor** to control the height of the added 3D plot. Enter an **Offset** (default value: 0) or use the associated slider to control the base location (relative to the 2D surface's level). The offset value is relative to the geometry space and is not scaled. The height axis appears by default; clear the **Show height axis** check box to hide it.

VIEW

The **Height Expression** subnode makes the plot a 3D plot, which needs a 3D view for the grid, camera, lighting, and other 3D view settings. Select the 3D view to use from the **View** list. The default is **Automatic**, which creates a 3D view if needed. Alternatively, select one of the existing **View 3D** nodes in the model. It is also possible to choose **New view**. The plot then uses that new view, which appears as a **View 3D** ( ) node under **Views**.

Selection (Plot Attribute)

The **Selection** subnode ( ) provides the possibility to define a selection for some plots. Add it to make the plot appear only in some geometric entities (some domains, for example). Arrow Line, Arrow Point, Arrow Surface, Arrow Volume, Contour, Coordinate System Line, Coordinate System Surface, Coordinate System Volume, Isosurface, Line, Max/Min Line, Max/Min Surface, Max/Min Volume, Mesh, Multislice, Principal Stress Volume, Principal Stress Surface, and Principal Stress Line, Slice, Streamline, Surface, and Volume plots support the Selection attribute. In the **Model Builder**, add one of those plot types; then right-click the plot node and select **Selection**.

SELECTION

From the Selection list, choose **Manual** to select the geometric entities (domains or boundaries, for example, depending on the plot type) directly in the Graphics window or using the tools in the **Selection** section. You can also select **All domains** or **All boundaries**, for example, or any applicable selection defined in the model.

	See Adding a Selection to a Dataset for information about adding a **Selection** subnode to a dataset, which can be an alternative to a **Selection** subnode for a plot if you want to apply the same selection to many plots.

Exporting Data and Images

Export Types

After a model is completed, you can add various components to the **Export** branch and then generate outputs (animations, data, images, or export), or export the information to your computer as images, movies, or data files for use in external documents or for other purposes. In the **Model Builder**, under the **Export** node, right-click and select an option as listed in Table 21-12.

TABLE 21-12: EXPORT TYPES

LINK TO SECTION	DESCRIPTION
Animation	To define and export a movie or series of images based on a plot group. Play the animation in a web browser or use it in presentations or on a website.
Player	To define and play a movie in the COMSOL Desktop. See Animation.
Data	Exports numerical data to file. Data export operates directly on datasets. It is also possible to export mesh data.
Mesh (Export)	To export a mesh defined by a dataset to file.
Table	To export the contents of a table to file.
Image	To export images to a file or (on Windows) to the clipboard or to PowerPoint.
Plot	To export a plot from a 1D Plot Group, 2D Plot Group, or 3D Plot Group.

Right-click the **Export** node and select **Export All** ( ) to export data from all export nodes added under **Export**.

About the Sectionwise Data Format for Data Export

When exporting data on the sectionwise data format, the program evaluates the entered expressions at a number of points in each mesh element. For example, evaluating in Lagrange points of order 1 means that the expressions are evaluated at the vertices of each mesh element. When a vertex is shared by more than one mesh element (as is typically the case) this means that the expressions are evaluated several times at that coordinate, but using the shape functions in the different mesh elements. The values of these evaluations at the same point might not be equal, depending on the expression being evaluated. In particular, derivatives are typically discontinuous across mesh element boundaries and usually have different values.

Once all the evaluations have been made, the data is checked for duplicate values (that is, evaluations with the same coordinates and the same values of the expressions). Such duplicates are removed before the data is exported to file. With smoothing turned on, a smoothed variant of the derivative is evaluated, which is continuous across mesh element boundaries, so in such cases there are many duplicates. When evaluating at Gauss points, the evaluation points are always in the interior of mesh elements, so there are never any duplicates.

To avoid the removal of duplicates, you can export several expressions to the same file, and then the values of all expressions must agree to be considered duplicates. Another way to ensure that no duplicates are removed is to add the variable `meshelement` to the list of expressions.

- Data
- See Table 21-12 for links.

Animation

Use **Animation** ( ) to define and export a movie or series of images based on a plot group. Play the animation in a web browser or use it in presentations or on a website. You can also use it as a player directly in the COMSOL Desktop Graphics window. Use this node, for example, to export multiple images for different time steps or eigenvalues.

Right-click **Export** ( ) and choose **Animation>Player** to create an **Animation** node set up for a player, or choose **Animation>File** to create an **Animation** node set up for a exporting a movie or images to files.

SCENE

Select a **Subject**, which is one of the plot groups previously defined, or **None**.

TARGET

From the **Target** list, choose **Player** (the default when the **Animation** node was added as a Player) to play the movie directly in the COMSOL Desktop, or choose **File** (the default when the **Animation** node was added as a File) to export the animation to file as a movie or as an image sequence.

OUTPUT

Select an **Output type**: **Movie** (the default) to generate a single movie file containing all the images, or **Image sequence** to generate multiple image files, one for each frame. This section is only available when the **Target** is set to **File**.

- If **Image sequence** is selected:

  Enter a **Filename** including a path to save it to your computer, or click **Browse** and navigate to where you want to **Save** the output. For example, navigate to the desktop and enter a **Filename** in the **Export Image Sequence** dialog box, then select a image file type from the **Save as type** list: **.png**, **.bmp**, or **.jpg**.

  The text entered in the **Filename** field is used for all the images generated. For example, if `image` is entered, select **.png** as the file type, and if there are 11 frames in the movie, 11 files are created: `image01.png`, `image02.png`, …, `image11.png`.

- If **Movie** is selected, select a **Format** for the movie: **GIF** (the default), **Flash**, **AVI**, or **WebM**. For any movie or video format, enter a path and include a **Filename**. Or click **Browse** and navigate to where you want to **Save** the output. Also enter a number of **Frames per second** (the default is 10).

Select the **Always ask for filename** check box if you want the program to always display a dialog box for specifying where to store the movie or images.

Enter information into these fields based on the **Format** for the movie:

- If **Flash** is selected, the **Interpolate between frames** check box is selected by default. Click to clear the check box if you do not want interpolation between the frames.
- If **AVI** is selected, enter a **Quality**, a scalar value between 0 and 1. The default is 0.75.
- If **WebM** is selected, select the choose a **Codec** (compression format): **VP9** (the default) or **VP8**. VP9 is a compression format that is a successor to VP8 and that is customized for video resolutions greater than 1080p and also enables lossless compression. If you have chosen**VP9**, select the **Lossless** check box for a lossless compression. If you do no select the **Lossless** check box, you can enter a **Quality** parameter (a value between 0 and 1), where a higher values means a higher quality. The default is 0.6. The encoder uses VBR (variable bit rate),

and a higher value for the quality parameter means a higher target bit rate. A higher quality value usually results in large file sizes and longer encoding times.

The default for the **Advanced parameters** list is **Automatic**. Choose **Manual** to specify the advanced parameters under Advanced Parameters for the WebM Video Format below.

- For **Flash**, **GIF**, and **WebM** select the **Open in browser** check box to launch the default web browser to view the output file.

!	AVI is a file format that can contain video encoded in different ways. For movies using this format, you might also need to change the codec used for animations (in the **Graphics and Plot Windows** section of the **Preferences** dialog box). Use Windows Media Player to play AVI files.

Enter a value for the number of **Frames per second** when playing the movie (default: 10 frames per second).

Advanced Parameters for the WebM Video Format

The following advanced parameters are available for the WebM format:

The **Enable parallel encoding** check box is selected by default. Select the **Enable parallel decoding** check box to also enable parallel decoding when the **Enable parallel encoding** check box is selected.

From the **Dither** list, choose **Off** (the default) for no dithering or a level 1–5. Dither is low volume noise, and dithering adds white noise to reduce distortion of low-amplitude signals.

From the **Optimize for** list, choose **Speed (faster encoding)** (the default) or **Quality (slower encoding)**. If you have selected the **Lossless** check box, this setting is not available.

From the **Color space** list, choose one of the following color spaces: **BT.601 (limited range)**, **BT.601 (full range)**, **BT.709 (limited range)** (the default), or **BT.709 (full range)**.

ANIMATION EDITING

Control how the software creates the frames for the animation sequence. Select a **Sequence type**: Stored Solutions (the default), Result Parameter, Global Parameter, Dynamic Data Extension, or Streamline. Define the **Sequence type** parameters as needed.

	Each selected animation sequence component creates a frame in the movie or an individual image file.

Stored Solutions

The default, **Stored solutions**, is useful to animate time-dependent solutions or across the eigenmodes for an eigenvalue or eigenfrequency solution or across the parametric solutions for a solution from a parametric sweep. If **Stored solutions** is selected:

From the **Loop over** list, select the steps or parameter values to **Loop over**: **All solutions** (the default), or if applicable, a parameter or combination of parameters, any parameter in a **Parametric Sweep** study, or the **Time**. If **All solutions** is selected, a list appears that contains all combinations of parameter values and times (if applicable).

- **Parametric Sweep Study**: For parametric sweep studies where there are multiple inner solutions (for example, a parameter sweep around a time-dependent solution), **Inner solutions** and **Outer solutions** are also available, typically corresponding to **Time** and parameter values, respectively. Typically, an animation shows variations

looping over a parameter, frequency, or time; animating all solutions might be useful to get an overview of all solutions that the model contains.

- If you choose to loop over **Inner solutions**, select the **Parameter value** set to animate, then the time steps, which you can select, using the **Select via** list, as **Stored output times** (a **Time** list of all stored times), or **Interpolated times** (a text field where you can specify any times within the time range directly). See Volume Integration, Surface Integration, and Line Integration and Global for more information about the inner and outer solutions.
- If you choose to loop over **Outer solutions** (that is, the parameters from the parametric sweep), the **Parameter values** list contains all combinations of parameter values. Select as needed, then select an option from the **Inner type** list: **First**, **Last** (the default), or **All**.

- If a parameter or combination of parameters are selected to loop over, choose an option from the **Parameter selection** list: **All** (the default), **From list** to select from a list of all parameter combinations, or **Manual** to enter a range of parameter value indices directly (or click the **Range** button ( )).

  If the model includes other parametric sweeps or frequency sweeps, specify the value of those parameters for the frames in the animation in separate **Parameter value** lists. Also, if the model includes a time-dependent solution, select a time step from the **Time** list, or select **Interpolated** to specify any time within the time span in the text field that appears.
- If you select to loop over the **Time**, for time-dependent problems, choose an option from the **Time selection** list: **All** to use all time steps, **From list** to select from a list of all time steps, **Manual** to enter a range of times as indices directly, or **Interpolated** to enter **Times**. If the model contains a parametric sweep, select an option from the **Parameter value** list.

Result Parameter

Use a **Result parameter** to animate the changes resulting from a sweep of the values for a defined result parameter (found under **Results>Parameters**). Using a parameter you can, for example, animate a sweep of the position of a slice across the geometry in a slice plot using it in the slice coordinates. Typically, you can use a result parameter in text fields for coordinates. It is not possible to use a result parameter in, for example, text fields for expressions.

If **Result parameter** is selected, choose a **Parameter** from the list (or select **None**), which contains all result parameters, and define an interval for the parameter values using the **Start** and **Stop** fields and a unit in the **Unit** field, if desired (the parameter's unit appears here if it exists).

Global Parameter

If **Global parameter** is selected, choose a **Parameter** from the list (or select **None**), which contains all global parameters, and define an interval for the parameter values using the **Start** and **Stop** fields and a unit in the **Unit** field, if desired (the parameter's unit appears here if it exists). It is not possible to use a global parameter in, for example, text fields for expressions.

Dynamic Data Extension

Use a **Dynamic data extension**, for example, to animate the dynamics of an eigenmode in an eigenfrequency or eigenvalue solution. In such a dynamic data extension, the full harmonic cycle (the default) is the normal choice. You can also use it to animate a stationary solution even if there is no obvious interpretation of the animation.

If **Dynamic data extension** is selected, and when animating static and eigenvalue solutions, select a **Cycle type**:

- **Full harmonic** — a full sine wave (the solution phase grows linearly from 0 to 360°)
- **Half harmonic** — half a sine wave (the solution phase grows linearly from 0 to 180°)
- **Linear** — a linear ramp ($\mathrm{Re}(e^{i\alpha})$, where α is the phase, grows linearly from 0 to 1)

  The cycle starts from the angle specified in the **Solution at angle (phase)** field when defining a **Solution** dataset.

Streamline

Select **Streamline** when you want to animate streamlines with moving arrows to indicate some fluid flow, for example. From the **Plot** list, choose the streamline plot to animate from any existing **Streamline** plot nodes.

FRAMES

If the selected **Sequence type** is Stored Solutions, choose a **Frame selection**: **All** (to play all solutions in the stored solution) or **Number of frames**. For any sequence type, or if number of frames is selected here, enter the **Number of frames**. The default is 25 frames.

If the **Target** is set to **File**, you can specify the following additional settings:

- From the **Size** list, select **Manual** (the default) or **Current**, which uses the current size of the **Graphics** window.
- For **Manual**, select the **Lock aspect ratio** check box to keep the original animation width and height. In the **Width** and **Height** fields, enter the number of pixels (px) for the generated image size. The default value is 640 pixels (width) by 480 pixels (height).
- If required, select the **Record in reverse order** check box.
- If required, select the **Zoom extents** check box to zoom the output frames to the extents of the plot's subject.

If the **Target** is set to **Player**, and to preview individual frames, enter the **Frame number** or select it using the slider. Observe the geometry in the **Graphics** window to see the **Shown frame** number.

PLAYING

Use this section, when the **Target** is set to **Player**, to adjust some settings that affect the playing of the recorded plots. In the **Display each frame for** field, enter the time to display each frame (in seconds) to control how fast the player runs (default value: 0.1 s). Select the **Repeat** check box to replay the sequence of plots repeatedly instead of playing it just once.

At the top of the **Settings** window, click **Show Frame** ( ) (or right-click the **Animation** node) to regenerate the animation if it has not already been generated. Then the frame of the animation corresponding to the settings for the player is shown.

Right-click the **Animation** node and select **Play** ( ). Watch each **Frame number** cycle from beginning to end in the **Graphics** window. You can also use the buttons on the **Graphics** window to **Play** ( ) and **Stop** ( ), and **Next** ( ) and **Previous** ( ) to cycle through the animation.

LAYOUT

If the **Target** is set to **File**, you can specify the following layout settings:

- By default, the **Title**, **Legend** (1D graphs) or **Color legend** (2D plots); **Axes**; and **Logotype** (1D and 2D plots) or **Title**, **Color legend**, **Grid**, **Axis orientation**, and **Logotype** (3D plots) parts of the graphics are included. To edit the default, select the **Include** check box and click to clear or select one or several of the available check boxes.
- Enter a **Font size** (pt) for the text in the animation frames. The default is 9 pt.
- Select a **Background**: **Color** (the default) or **Current**. If **Color** is selected, click **Color** to select a custom color background to replace the default, which is white. Select **Current** to use the background in the plot group, which is a blue gradient background for 3D plots and white for 2D and 1D plots.

ADVANCED

By default, the **Synchronize scales between frames** check box is selected, which means that all frames in the animation use the same color scale, isosurface levels, deformation scale, and so on. This synchronization makes areas with the same solution values keep the same color, for example, during the entire animation. Click to clear the check box to make the scales and levels adapt to the solution in each frame. This can be useful, for example, for time-dependent

simulations of transient phenomena where the magnitude of the solution changes significantly during the time stepping. With the synchronization active, it can then be difficult to distinguish small variations in the solution.

The remaining settings below are only available if **Target** is set to **File**.

If needed, adjust settings for the resolution and antialiasing:

- Enter a **Resolution** for the images in the animation. The default is 96 DPI.
- The **Antialiasing** check box is selected by default to reduce stairstep-like lines and to smooth lines and edges.

Click the **Export** button ( ) in the **Settings** window or right-click the node and select **Export** to export the animation to a file, if **Target** is set to **File**. The animation file is exported to the location on your computer previously specified. The **Messages** window confirms where the files are exported as specified in the **Output** section. Click the **Refresh** button ( ) to refresh the **Graphics** window. This is useful if you have disabled **Only plot when requested** in the **Results** node's **Settings** window and change the **Subject** in the animation.

	Parametric Sweep and Introduction to Solvers and Studies

Data

Use **Data** ( ) to export numerical data to a file. Data export operates directly on datasets. You can use different types of evaluation points other than the ones in the dataset (for example, a grid) and export the data in spreadsheet or sectionwise formats.

To export data, you can right-click **Export** ( ) and select **Data** ( ), or right-click any dataset node, for example, **Solution**, and select **Add Data to Export**. Click the **Data** node under **Export**.

	The nodes are numbered sequentially. To make it easier to organize, you can right-click and **Rename** the node.

	• Go to Common Results Node Settings for information about the **Data** and **Expressions** sections. • For detailed information about Data Formats, see the *COMSOL Multiphysics Programming Reference Manual*.

OUTPUT

From the **File type** list, select the file type for the exported data. Choose **Text** (the default), for any of these text file types: text files (*.txt), CSV (comma-separated values) files (*.csv), data files (*.dat), or, if the license includes LiveLink™ *for* Excel®, Microsoft Excel workbook (*.xlsx). Choose **Unstructured VTK file (*.vtu)**, for saving to an unstructured VTK file.

Enter a **Filename** including a path to save the data file to your computer or click **Browse** and navigate to where you want to **Save** the output. For example, navigate to the desktop and enter a **Filename** in the **Export Data** window. When you have chosen **Text** from the **File type** list, you can save the data using any of the supported text file types that you choose from the **Save as type** list.

Select the **Always ask for filename** check box if you want the program to always display a dialog box for specifying where to store the data.

Select the **Points to evaluate in**: **Take from dataset** (the default), **From file**, **Grid**, or **Regular grid**. Depending on the selected type of points to evaluate in, various settings are available.

Take from Dataset

The default **Take from dataset** uses the data points for the data in the dataset. For export to a text file, select a **Data format**: **Spreadsheet** (the default) or **Sectionwise**. Spreadsheet data is useful to use the data in spreadsheet applications and sectionwise data format is useful for unstructured interpolation because it contains the exact mesh used to perform the interpolation.

For either choice, select a **Space dimension**: **Take from dataset** (the default), **Global**, **0**, **1**, **2**, or **3**. Then select a **Geometry level**: **Take from dataset** (the default), **Volume**, **Surface**, **Line**, or **Point** (availability is based on the model space dimension).

If **Spreadsheet** is selected (and if required), choose the **Transpose** check box to transpose the data from columns to rows.

From File

If **From file** is selected, it uses coordinates from a data file. Enter a **Coordinate file** for a text file with the coordinates for the data output, or click **Browse** to locate the file. The file format for a coordinate file is such that each row contains N coordinates for an N-dimensional geometry. That is, each row contains coordinate values like the following example, for a 3D case:

```
x0 y0 z0 …
x1 y1 z1 …
…
```

You can use any of the following characters to separate the coordinates: space, comma, semicolon, or a tab character. Empty lines and lines that begin with a percent (%) character are ignored.

Grid or Regular Grid

If **Grid** or **Regular grid** is selected, it uses a grid to define the points to evaluate in. Select a **Data format**: **Spreadsheet** (the default) or **Grid**. Spreadsheet data is useful for using the data in spreadsheet applications, whereas the grid data format is more compact and can be useful to store data that can be imported into another model.

If **Grid** is selected as the **Data format**, also specify the **x**, **y**, and **z** coordinates for the grid points in the fields, or, for the **Regular grid**, specify the **Number of x points**, **Number of y points**, and **Number of z points** for the regular grid in the fields (default: 10 points in each direction). The coordinate names can vary depending on the physics and space dimension.

ADVANCED

- The **Include header** and **Full precision** check boxes are selected by default. Click to clear the check box if you do not want to include a header, or to limit the precision in the output to six significant figures (and which provides an output that contains all significant figures for data stored as double-precision numbers). When exporting to VTK files, the **Include header** check box is not available.
- By default the data is unsorted. Select the **Sort** check box to sort the data by increasing x, y, and z coordinates.
- From the **If the file exists** list, select **Overwrite** (the default) to replace the data in the file with the data you export, or choose **Append** to append the data to the end of the file. Appending data can be useful when exporting data for a parametric sweep, for example. When exporting to VTK files, the **If the file exists** list is not available.
- The **Evaluate in** list is only available for data from Solution datasets. From the **Evaluate in** list, select **Lagrange points** (the default) or **Gauss points** to specify where COMSOL Multiphysics evaluates the data — the nodes of the Lagrange elements or in the Gauss points for the Gaussian quadrature, respectively.
- Smoothing of the data is available with Solution datasets where the **Evaluation in** list is set to **Lagrange points** and with nonsolution datasets, in both cases when the **Points to evaluate in** list in the **Output** section is set to **Take from dataset**. Select a data **Smoothing** method — **None**, **Inside material domains** (the default, for smoothing within domains shared by the same material but not across material boundaries), **Inside geometry domains** (for smoothing within each geometry domain but not across interior boundaries), **Everywhere**, or **Expression**. If you

choose **Expression**, enter an expression in the **Expression** field such that smoothing occurs where the expression is continuous. The default expression is `dom`, the domain variable, which is equivalent to the **Internal** smoothing. You can also — in a surface plot, for example — use `material.domain`, which is an indicator variable for domains that share the same material (see Material Group Indicator Variables) and is equivalent to the **Inside material domains** setting.

- For all **Smoothing** methods except **None**, you can also choose smoothing threshold, if needed. From the **Smoothing threshold** list, select **None** (the default), or select **Manual** to enter a relative smoothing threshold value (default: 0.1) in the **Threshold** field.
- Select a **Resolution**: **Normal** (default), **Finer**, **Fine**, or **Custom**. If **Custom** is selected, enter a **Lagrange-element node-point order** (the default is 1). Use a higher node-point order for a finer resolution.
- Select a recovery setting from the **Recover** list. The default is **Off** because recovery takes processing time. To use polynomial-preserving recovery and recover fields with derivatives such as stresses or fluxes with a higher theoretical convergence than smoothing, from the **Recover** list, select **Within domains** to perform recovery inside domains or **Everywhere** to apply recovery to all domain boundaries.

Click the **Export** button ( ) in the **Settings** window or right-click the node and select **Export**. The **Messages** window confirms where the files are exported as specified in the **Output** section.

	Expressions and Predefined Quantities

Mesh (Export)

Use the **Mesh** ( ) node to export a mesh to file. Mesh export operates directly on datasets and exports the mesh in the frame specified by the dataset. The mesh data can also be exported from datasets that contain meshes, for example, a **Mesh** dataset or a **Solution** dataset. Right-click the **Export** node and select **Mesh**, or right-click any dataset node, for example, **Solution**, and select **Add Mesh to Export**. In the **Settings** window for **Mesh**, follow these steps to export mesh data:

DATA

Select a **Dataset**. The **Dataset** list contains the solution and mesh datasets previously defined. Select **None** to not export any mesh data.

OUTPUT

Select a **File type** from the list of available file formats. Enter a **Filename** including a path to save it to your computer or click **Browse** and navigate to where you want to **Save** the output. You can export the mesh to a COMSOL Multiphysics binary file (*.mphbin) or text file (*.mphtxt) or to an STL binary file (*.stl) or text file (*.stl), if a 3D dataset is selected.

Select the **Always ask for filename** check box if you want the program to always display a dialog box for specifying where to store the mesh.

Click the **Export** button ( ) in the **Settings** window or right-click the node and select **Export**.

	See Importing and Exporting Meshes for information about exporting mesh data using the **Export** option from the main **Mesh** node. You can use that mesh export if you want to export the mesh using the NASTRAN format and also if you want to export the mesh before solving. If you have a mesh and want to import it into another model (as a mesh without its geometry) or into some other software package, it might be inconvenient to have to solve first.

Table

Use the **Table** ( ) node to export the contents of a table to file. A table export stores the data from any of the tables in the model, including any evaluation group tables, as a text file. To export a table, right-click a **Table** node under **Tables** ( ) and select **Add Table to Export**, or right-click the **Export** node and select **Mesh**.

Click the **Export** button ( ) in the **Settings** window or right-click the node and select **Export**. The **Messages** window confirms where the files are exported as specified in the **Output** section.

TABLE

First select a source for the table from the Source list: **Table** (the default) or **Evaluation group**. Then select a table or evaluation group from the list below. The **Table** or **Evaluation group** list contains the all tables or evaluation group tables in the model. By default, the selection of a table is the one from which you have selected **Add Table to Export** or the first available table or evaluation group table if you have added the **Table** node directly under **Export**. Select **None** to not export any table data.

OUTPUT

Enter a **Filename** including a path to save the table data as a file to your computer or click **Browse** and navigate to where you want to **Save** the output and specify the file type as a text file (*.txt), CSV file (*.csv), data file (*.dat), or, if the license includes LiveLink™ *for* Excel®, Microsoft Excel workbook (*.xlsx) from the **Save as type** list. When you save the table data as a Microsoft Excel workbook, you can also specify a **Sheet** and **Range** (by default, those text fields are empty; the program then saves all data), and by default the **Overwrite** check box is selected.

Select the **Always ask for filename** check box if you want the program to always display a dialog box for specifying where to store the table data.

ADVANCED

The **Include header** and **Full precision** check boxes are selected by default. Click to clear the check box if you do not want to include a header, or to limit the precision in the output to six significant figures (and which provides an output that contains all significant figures for data stored as double-precision numbers).

From the **If the file exists** list, select **Overwrite** (the default) to replace the data in the file with the data you export, or choose **Append** to append the data to the end of the file. Appending data can be useful when exporting data for a parametric sweep, for example.

The Table Window and Tables Node

Image

Use the **Image** node to export plot images as PNG, BMP, EPS, TIFF, GIF, or JPEG image files.

To export a plot, right-click **Export** ( ) and select **Image**, or right-click any **Plot Group** node, for example, **3D Plot Group** or **1D Plot Group,** and select **Add Image to Export**. Click the **Image** node under **Export**.

By default, the COMSOL Multiphysics generates images using the graphics card. Such hardware-accelerated image export runs fast and can make it possible to export larger images, but it can become unstable if the image size exceeds or is close to the allowed limit (for example, 4000-by-4000 pixels). To instead use software rendering for

creating the images, open the **Preferences** dialog box, and, on the **Graphics and Plot Windows** page under **Image export**, select the **Use software rendering for image export** check box.

	Use the Animation node to export multiple images for different time steps or eigenvalues. The nodes are numbered sequentially. To make it easier to organize, you can right-click and **Rename** the node.

	The default values for the properties below are valid before any image has been exported successfully. After that, the settings from the last successful image export are used as default values the next time you add an **Image** node.

In the **Label** field, enter another label for the node if desired.

From the **Preset** list, you can choose from predefined and user-defined sets of image snapshot settings: **Current**, **Manual (web)**, **Manual (print)** (the default), or **Presentation**, which are tailored settings for image snapshots suitable for a web page, for printing, or for a PowerPoint presentation. The **Current** option uses the current size on the screen (which is displayed), so only the **Zoom extents** and **Antialiasing** check boxes are available under **Image**. If you have modified the image snapshot, you can save those settings as another preset option. To do so, click the **Save as Preset** button ( ) and provide a name for the user-defined preset option in the **Name** field of the **Save as Preset** dialog box that opens. If you do not want to keep an added user-defined preset option, click the **Remove Preset** button ( ). If you have made changes to a preset option and want to return to its default values, click the **Reset Preset to Default** button ( ).

The **Settings** window for **Image** includes the following sections:

SCENE

Select an image source. The tree of nodes contains the 1D, 2D, or 3D plot groups previously defined. It also contains component nodes that are associated with an image such as selections, the geometry (including individual geometry features and work planes in 3D), materials, physics features, and meshes. Click the **Use as Source** button ( ) underneath the tree to define the selected node as the source for the image export. The selected node gets a source overlay ( ) in the tree above and is added to the **Selected source** field below. Click the **Clear Source** button ( ) as needed to remove the source. If you have added an image from a plot group, that plot group is set as the selected source.

Select a **View**: **From plot group** or **From geometry** (the defaults, depending on the selected node) to use the view from the plot group settings or from the component's geometry, respectively, or select another view from the list (if available and previously defined). It is also possible to choose **New view**. The image then uses that new view, which appears as a 2D or 3D **View node** (or ( ) node under **Definitions** (or under **Definitions>Views** if the nodes are grouped by type).

On the **Settings** window toolbar, click the **Refresh** button ( ) to refresh the **Graphics** window to get a preview of the image to export. Refreshing can be useful if you have changed the scene or view.

Click the **Export** button ( ) in the **Settings** window or right-click the node and select **Export** to export an image to a file. The **Messages** window confirms where the file is exported as specified in the **File** section.

IMAGE

- Select a **Unit** of dimension: **Millimeters (mm)** (the default), **Inches (in)**, or **Pixels (px)**.
- Select the **Lock aspect ratio** check box to keep the original image width and height.

- In the **Width** and **Height** fields, enter the number of pixels, millimeters, or inches for the final image size.
- Enter a **Resolution**. The default is 96 DPI (dots per inch).

The image size for the exported image is displayed below.

Select the **Zoom extents** check box to add a zoom to extents before exporting the image. The **Antialiasing** check box is selected by default to reduce stairstep-like lines and to smooth lines and edges.

FILE

Choose a **Target**: **File** (the default), **Clipboard** (Windows only), or **PowerPoint** (Windows only).

Target Set to File

If **Target** is set **File**, choose an image file **Format**: PNG (the default), BMP, JPEG, TIFF, GIF, glTF (GL Transmission Format; 3D only, saved as binary GLB files), or EPS (1D only). If you choose the JPEG format, you can also control the quality of the image using a quality measure (scalar number) between 1 and 100 (a higher number represents a higher quality). The default value is 92. Select the check box next to **Quality** to enter another quality number.

> JPEG is a format that uses "lossy compression", so using a low quality measure can make the exported image differ from the original image.

Enter a **Filename** including a path to save it to your computer or click **Browse** and navigate to where you want to **Save** the output.

Select the **Always ask for filename** check box if you want the program to always display a dialog box for specifying where to store the image.

Target Set to PowerPoint

Select the **Lock view** check box if you want to lock the view in PowerPoint. Saved camera settings are then used when you update the image from PowerPoint. If this check box is cleared, the current camera settings are used when updating the image.

LAYOUT

> When importing an image with a transparent background to another Windows application, first save the image as a file rather than saving it to the clipboard. In some cases the transparent background is not preserved if you copy an image via the clipboard.

One additional **Background** option is available for the Image export when using a PNG file format: **Transparent**. Otherwise, see Animation for the rest of the settings. For 1D **Image** nodes, the **Include** check box is selected by default.

For the glTF file format, the **Include line segments** check box is selected by default. Clear that check box to exclude line segments, which can be useful for glTF viewers that do not support line segments.

Plot

Right-click **Export** ( ) and select **Plot** ( ) to export a plot from a plot group. Or right-click any plot, for example, the Slice plot in a 3D Plot Group, and then select **Add Plot Data to Export**.

	The nodes are numbered sequentially. To make it easier to organize, you can right-click and **Rename** the node.

PLOT

Select a **Plot group** from the list, which contains any previously defined plot groups. Select a **Plot** to export its data. Plot groups can contain one or more individual plots.

Click the **Refresh** button ( ) in the **Settings** window toolbar to update the display in the **Graphics** window of the plot that you want to export after making changes to the selected plot group and plot.

Click the **Export** button ( ) in the **Settings** window toolbar or right-click the node and select **Export**. The **Messages** window confirms where the files are exported as specified in the **File** section.

OUTPUT

From the **File type** list, choose a file types for saving the plot data:

- Choose **Text** (the default), for any of these text file types: text files (*.txt), CSV (comma-separated values) files (*.csv), data files (*.dat), or, if the license includes LiveLink™ *for* Excel®, Microsoft Excel workbook (*.xlsx).
- Choose **Unstructured VTK file (*.vtu)**, for saving to an unstructured VTK file.
- Choose **STL binary file (*.stl)** or **STL text file (*.stl)** for saving to an STL file. The options to export to STL files are only available for Volume, Surface (Plot), Slice, Multislice, Isosurface (Plot), and Radiation Pattern plots.
- Choose **PLY binary file (*.ply)** or **PLY text file (*.ply)** for saving to a PLY file, a file format known as the Polygon File Format or the Stanford Triangle Format, principally designed to store 3D data from scanners. The options to export to PLY files are only available for Volume, Surface (Plot), Slice, Multislice, Isosurface (Plot), and Radiation Pattern plots.
- Choose **3MF file (*.3mf)** for saving to a 3MF file, a file format known as the 3D Manufacturing Format principally designed as a 3D printing format for additive manufacturing. The options to export to 3MF files are only available for Volume, Surface (Plot), Slice, Multislice, Isosurface (Plot), and Radiation Pattern plots. A warning appears when the resulting file does not seem fit for 3D printing.

Enter a **Filename** including a path to save it to your computer, or click **Browse** and navigate to where you want to **Save** the output. When you have chosen **Text** from the **File type** list, you can save the data using any of the supported text file types that you choose from the **Save as type** list.

Select the **Always ask for filename** check box if you want the program to always display a dialog box for specifying where to store the plot data.

If the **File type** is set to **Text**, from the **Data format** list, select **Spreadsheet** (the default) or **Sectionwise**. For Streamline plots and Particle Tracing plots, you can also control the amount of data to export. By default, the data contains full information about all points for all particles or streamlines. Select the **Only export starting points and endpoints** check box to only include one row with the starting point, the endpoint, and the length of the streamline or particle trajectory for each streamline or particle..

	This check box only has an effect on particles plotted as lines because plots of particles as points do not contain full information about the particle trajectories.

	For line plots that are exported using the sectionwise format, then if the plots are for a variable that is discontinuous between line segments, the sectionwise data will also be discontinuous. Smoothing can merge points with almost the same data values but not points where the difference is significant.

If a referenced 1D plot group contains multiple curves with the same x-coordinates, you can choose an output format from the **If multiple curves** list:

- Choose **Append as rows** (the default) to append the curve data as rows, which results in a data file where all curves' coordinates appears in rows and two columns for their x-coordinate and y-coordinate values, respectively.
- Choose **Append as columns** to append the curve data as columns, which results in a data file where all curves' coordinates appears columns, the first one for their common x-coordinate values and subsequent columns, one for each curve's y-coordinate values. This format can be more convenient for use as input to interpolation functions and for further processing in external software products such as MATLAB® and Excel®.

ADVANCED

- The **Include header** and **Full precision** check boxes are selected by default. Click to clear the check box if you do not want to include a header, or to limit the precision in the output to six significant figures (and which provides an output that contains all significant figures for data stored as double-precision numbers). If you save the plot data as a VTK file, the **Include header** check box is not available. For export to STL files, none of these check boxes are available.
- By default the data is unsorted. Select the **Sort** check box to sort the data by increasing x, y, and z coordinates.
- From the **If the file exists** list, select **Overwrite** (the default) to replace the data in the file with the data you export, or choose **Append** to append the data to the end of the file. Appending data can be useful when exporting data for a parametric sweep, for example. If you save the plot data as a VTK file, the **If the file exists** list is not available.

Reports

About the Report Generator

The Report Generator is a tool for reporting and documenting models created in COMSOL Multiphysics. It creates a record of the entire model or selected parts of it, including information about settings made during the modeling process as well as simulation results in the form of tables and images.

Several reports can be created for each model, and you can configure each report by adding, moving, deleting, and disabling the nodes that define the report. You can also define custom templates to generate reports that contain information about specific parts of the model while excluding others. The reports are stored with the model, so you can keep generating reports using the previously configured report contents and update the reports when the model changes.

These reports are easy to publish as electronic documents suitable for the internet or as Microsoft® Word documents (.docx files). The utility generates the HTML report in a file format that makes it possible to customize the report in any HTML editor. A custom style sheet can be used to format the report. You can use HTML tags to create hyperlinks and format the report output in text boxes, headings, and captions.

Generating a Model Report

For a model for which you want to create a report, the following steps describe the general procedure:

1. Right-click **Reports** ( ) and choose a report type that creates report nodes that describe the model with a suitable level of detail. The built-in report types, **Brief Report**, **Intermediate Report**, and **Complete Report** are always available. You can also create your own report templates based on either of the built-in ones, which then become accessible from the context menu and the ribbon tab under **From Template**; see the next section for details. Alternatively, you can choose **Custom Report** and build the report node by node.
2. In the main **Settings** window for **Report**, specify the output format (**HTML** or **Microsoft Word**) and the location for the output file and the associated folder with images and style sheet information. You can also specify the style sheet to use for HTML reports and how to enumerate the sections in the report.
3. The top node is typically the **Title Page** node ( ). In its **Settings** window, you can define the title (defaults to the model's filename), an image to use at the top of the report, author, date, and company information, and add a summary and acknowledgments if applicable.
4. Review the structure and contents of the report. You can add, move, edit, disable, and delete structural elements and report contents. In the **Template** section of the main **Settings** window for **Report** you can change the template and then click **Generate** ( ) to regenerate the report. The **Template** setting also affects the level of details for any nodes you add manually.

Regenerating a nonempty report replaces the current contents.

The built-in report types define different levels of detail:

- **Brief Report**: contains an overview of the model with all results and plots but no details about the physics interfaces, physics features, solver settings, or variables.
- **Intermediate Report**: contains comprehensive information about the model, including the physics interface settings and variables but not complete information about the underlying equations, for example.

- **Complete Report**: contains all information about the model, including physics interface details such as weak equation expressions and shape functions. This report is suitable for troubleshooting, for example.
- **Custom Report**: contains an initially empty report, which you can configure using the available report components.

	For all report types, the templates provide a starting point. It is possible to customize all reports by modifying, moving, adding, disabling, and deleting nodes in the reports. You can also switch the template for an existing report, which affects the report nodes added afterward.

Creating, Exporting, and Using Custom Report Templates

If none of the built-in templates provides the level of detail or formatting that you want for your reports, you can create custom report templates where you can adjust all the settings that you can make in the report nodes to your liking. To add a template to the model, right-click **Reports** ( ) and choose **Template**. Choose settings and generate the template as described in the next section.

When done, you can export the templates you have added to your model to an MPH-file that you save in a dedicated folder, as specified in the **User templates directory** text field on the **Results** page of the **Preferences** dialog; by default, this is the `reporttemplates` folder under your current COMSOL Multiphysics settings directory. Once exported, the templates become available also in future modeling sessions. Established standard templates are best saved in the `data/reporttemplates` folder under the COMSOL Multiphysics installation root.

	Saving files under the COMSOL Multiphysics installation root may require administrator privileges.

If you later need to edit an exported template or add new ones, simply open the MPH-file containing your templates and make the desired adjustments. You can choose to have all your templates in a single MPH-file or place them in different ones as long as they are saved in one of the supported folders (user or installation) as described above. The filename for an exported template will be shown within parentheses after the template's label in its context-menu and list items. For example, if the MPH-file MyTemplates.mph in your user templates directory contains a template with the label **Plots Only**, you generate a report using this template by choosing **Reports>From Template>Plots Only (MyTemplates)**.

The Template Node

The **Template** node ( ) contains settings relevant for generating the template as well as the template settings matching the settings available in the main **Report** node described in the next section. The corresponding settings for all other report nodes that can appear when generating a report are made in their respective template node versions; see The Title Page, The Table of Contents, and the sections listed under Model Contents — Report Components.

	The template versions of the regular report nodes are restricted to settings that can be meaningfully included in a template. They therefore differ slightly from their regular report counterparts. Specifically, settings in the latter that refer to instances of model reports or model nodes are either not present or replaced by single check boxes where you specify whether to include or exclude nodes of the corresponding types.

Use the **Label** text field to give your template a descriptive name. This helps you to find the right template to use when generating reports.

TEMPLATE

In the **Template** section, choose the initial level — **Brief**, **Intermediate** (default), or **Complete** — from the **Use initial settings for level** list before you click **Generate** ( ) to generate the template tree. This setting also applies if you build the template node by node. In this section you also choose how nodes that are disabled or not present in the template are interpreted when the template is used for generating a model report. By default, nodes of the same type — for example **Table of Contents**, **Material**, or **Solver** — are not added to the report. If you change **Default state for deleted or disabled nodes** to **Include**, disabled and absent nodes will be included when generating a report with the settings for the chosen initial level. (Note that the **Exclude** setting in the template does not prevent you from manually adding any type of node to a report after it has been generated.)

FORMAT, IMAGES, AND NUMBER FORMAT

In these sections, you can specify the template's initial values for the report-level settings described next.

The Report Node

The main **Report** node ( ) contains information about the formatting and defaults for the report.

If you have added a **Custom** report, you can generate a report tree based on the available templates as specified in the **Template** section (described below) by clicking **Generate** ( ). If the report tree is not empty, you will be asked if you want to replace the current tree.

	Any manual changes that you have made in the model tree, such as rearrangements of the section structure or settings adjustments will be lost if you confirm that you want to replace the current report tree.

Regenerating the report tree can be useful if you want to update the tree to reflect changes you have made in the model or if you want to change the report template without replacing the entire report.

Click the **Preview Selected** ( ) or **Preview All** ( ) button to show a preview of the report in the **Preview** window. Click the **Write** button ( ) in the toolbar for the **Settings** window for **Report** to create a report. The **Write** option is also available by right-clicking any node in the report. Selecting **Write** from any report node's context menu generates the entire report.

TEMPLATE

This section, which is collapsed by default, contains the setting for the level of detail in new nodes that are added to the report manually. It also determines which nodes are added as well as their level of detail if you click **Generate** ( ) in the main **Report** node's toolbar. The **Template** list takes its initial value from the template used to create the initial report contents. Alternatively, if you added an empty report, the default value is **Intermediate**. The options available for selection include the values **Brief**, **Intermediate**, and **Complete** as well as any custom report templates found in your user and installation report templates folders and in the current model (see Creating, Exporting, and Using Custom Report Templates).

FORMAT

You can select to create a report in one of the following formats, which you choose from the **Output format** list:

- **HTML**, for creating the report as an HTML file for display in a web browser.
- **Microsoft Word**, for creating the report as a docx file for use as a document in Microsoft® Word (version 2007 or later).

When adding a new report, the initial setting for the output format is that of the last report you wrote (or previewed).

The Report Generator stores the report in a file with the chosen name and by default gives it the extension `.html` or `.docx`. For HTML reports, it stores images included in the report and the style sheet in a subdirectory with the same name as the report plus the suffix `_files`. Reports in Microsoft Word format are self contained.

Specify the report's directory path and filename in the **Filename** text field or click **Browse** to launch the **Specify Report File** dialog box, browse to the desired location, and enter the filename in the **File name** text field. If the text field is empty, you will be asked to specify the filename when you click **Write**. If you select **Always ask for filename**, the **Specify Report File** dialog box will always prompt you for a filename; if specified, the current name is the default choice.

When you add a new report, the filename will by default be empty. You can override this behavior by specifying a default report directory in the **Preferences** dialog; see the subsection Edit the Default Report Settings below.

Select **Open finished report** to directly open the generated report in a web browser (HTML) or Microsoft Word.

By default, report output data that refers to model contents will be rendered as hyperlinks if there is a report section for the referenced object. For example, in the report section for a solver you can follow a link to get to the section describing the study step that defines the solver. If you want to disable hyperlinks, for example when printing a report, select the **Disable cross-reference hyperlinks** check box.

To customize the style of reports in the HTML output format, you can specify the CSS-file to use in the **Style sheet** list:

- Select **Default** to use the default style file specified in the **Preferences** dialog (see Edit the Default Report Settings) or the built-in style in COMSOL Multiphysics if no valid default style file has been given.
- Select **Custom** if you want to use a custom style sheet for a particular report. If you select **Custom**, specify a style sheet in the **Style-sheet file** field, or click **Browse** to locate the style-sheet file (CSS file).

Also for reports in the HTML format, select a level from the **Generate separate files a section level** list: **None** (the default; one file only), **Level 1**, **Level 2**, or **Level 3**.

For reports in the Microsoft Word format, you can control the layout using the **Template** list:

- Select **Default** to use as the style template the default Microsoft Word template (.dotx) or Microsoft Word document (.docx) file specified in the **Preferences** dialog. If no such file has been specified, COMSOL's built-in template will be used.
- Select **Custom** and type a path to the .dotx or .docx file of your choice in the **Template file** text field or click **Browse** to navigate to its location on the file system.

From the **Start new page at section level** list, choose the section level at which to start a new page of your report in Microsoft Word format: **None** (no page breaks), **Level 1** (the default), **Level 2**, or **Level 3**.

For both output formats, choose the section level to which the report should enumerate each section from the **Enumerate section to level** list: **None** (no enumerated section), **Level 1**, **Level 2**, **Level 3** (the default), **Level 4**, **Level 5**, **Level 6**, or **All** (enumerate all sections).

Publishing and Editing an HTML Report

Once an HTML report is created, it can be published or edited in any HTML editor. If you want to publish a report on the internet or send it to a colleague, also send the HTML file and the folder with the images and style sheet.

IMAGES

From the **Size** list, you can select the image size as **Extra small** (240-by-180 pixels for HTML screen output/2.4-by-1.8 inches for print-optimized output), **Small** (320-by-240 pixels/3-by-2.4 inches), **Medium** (480-by-360 pixels/4-by-3 inches), **Large** (600-by-450 pixels/6-by-4.5 inches), or **Extra large**

(720-by-540 pixels/7.2-by-5.4 inches)). All images have an aspect ratio of 4:3. From the **Type** list, select the image file type: **PNG** (the default), **JPEG**, or **BMP** (not supported for reports in Microsoft Word format; choosing this option gives PNG images).

For the best image quality, use PNG images.

There are three options for controlling image generation:

- **Generate images** (default): Report images are generated in accordance with the settings for the individual report features each time you write the report.
- **Suppress image regeneration**: Images are generated if they are not available. Use this option if you want to quickly rewrite the report to include changes that only affect the text.
- **Disable image generation**: Images are not generated. This option can be useful, for example, when troubleshooting models with a very large number of nodes.

NUMBER FORMAT

Using the controls in this section, you can customize how numbers are formatted in report table output. The available **Format** settings are:

- **Default** — Numbers in report tables are displayed in the same way as numbers are displayed by default in the Table window in the COMSOL Desktop. In particular, the precision is then controlled by the **Output display precision** setting on the **General** page of the **Preferences** dialog.
- **Custom** — Choose this option if you want to customize number formatting for your report. You can then specify the **Precision** as an integer between 1 and 15 (the default is the current **Output display precision** preference setting); the **Notation**, with the alternatives
  - **Automatic** (default) — display numbers in either scientific or decimal notation depending on their magnitude.
  - **Decimal** — display numbers in decimal notation, for example `0.85`.
  - **Engineering** — display numbers in engineering notation, for example `850E-3`.
  - **Scientific** — display numbers in scientific notation, for example `8.5E-1`.

  and the **Complex notation**:
  - **Rectangular** — display complex numbers in terms of real and imaginary parts, for example `1 + 2i`.
  - **Polar** — display complex number in terms of magnitude and argument, for example `2.2361∠63.435°`.

For **Scientific** and **Decimal** notation, select the **Display all significant digits** if you want to keep trailing zeros within the chosen precision.

Select the **Right align numeric columns** check box to right align table columns with purely numeric data.

You can override the report-wide number format settings for individual report feature nodes that generate table data. The **Settings** window for such a report feature node contains a **Number Format** section where you can specify the **Format** as either **From report** (the default) or **Custom**. The former option gives the number formatting defined in the corresponding section of the parent Report node, whereas the latter allows you to specify dedicated settings.

Edit the Default Report Settings

Open The Preferences Dialog Box and click **Results** to control some properties for the report generator.

- If the **Report directory** refers to an existing directory, the default filename for a new report will be based on the model's name. When the report directory is set in this way, a nonabsolute path in the **Filename** text field in the **Format** section of the Report **Settings** window will be interpreted as relative to this directory.

- In the **Default report style-sheet file** field, type the full path and filename to a style sheet (.css-file) that you want to use as the default style sheet for reports in HTML format. Click **Browse** to browse to the file's location.
- In the **Default report template file** field, type the full path and filename to a Microsoft Word template (.dotx-file) that you want to use as the default style template for reports in Microsoft Word format. Click **Browse** to browse to the file's location. You can also use a Microsoft Word document (.docx-file) as your default template.
- In the **Logotype file** field, type the full path and filename for an image file (on PNG or JPEG format) to use as the logotype. Click **Browse** to browse to the logotype file. If empty, the COMSOL logotype appears in the report.
- In the **Company** field, type the name of a company associated with the report if desired.
- From the **Default image size** list, you can select the default size for report images; choose between **Extra small**, **Small**, **Medium**, and **Large**. Similarly, use the **Default image type** list to specify the default type for the report images: **PNG**, **JPEG**, or **BMP**.
- Select the **Prompt for update of table of contents in Microsoft Word** check box to make Microsoft Word ask whether you want to update the table of contents when you first launch a report in this format. Such an update is necessary to generate page numbers in the table of contents, but you can choose to do the update after you have opened the document in Microsoft Word. By default this check box is not selected.

The Title Page

By default, all nonempty reports start with a title page (if it is not needed, right-click the applicable node and choose **Delete**). The **Title Page** node ( ) defines general settings and information about the model. The default name is the model's filename.

FRONT MATTER

In the **Report title** list, choose between linking the report's title to the MPH-file's name (**From model**) or specifying it independently (**Custom**). If you choose **Custom** (the default), use the **Title** field to give the title of the report (the default text is the title specified in the root node's **Title** field; see The Root Settings and Properties Windows).

From the **Image** list, select an option for an image in the report title: **None**, **Thumbnail** (the default), or any of the plot groups' plots in the model. See Setting and Clearing the Thumbnail Image for information about the thumbnail.

From the **Layout** list, select **Table** (the default) to present the model settings such as author and date in a table, or select **Headings** to present these settings using headers.

The **Logotype** list offers the alternatives **None**, **Default** (the default), and **Custom**. Choose **None** if you want a report without a logotype on the title page. The **Default** option gives a report with the logotype that you have specified in the **Preferences>Results** dialog box or, if no such logotype is available, the COMSOL logotype. Choosing **Custom** activates a **Logotype file** text field with an associated **Browse** button, allowing you to specify a custom logotype.

Use the **Author**, **Company**, and **Report version** fields if desired to provide that information in the report. Clear the check box in front of each setting to exclude it from the report.

In the **Report date** list, you can choose between **None**, **Current** (the default), and **Custom**. Choose **None** to leave out the report date from the title page, **Current** to use the date and time when the report is written, or **Custom** to enter a date string of your choice in the **Date** text field (where the current date appears by default).

The **Summary** text box contains the comments from the model's root node (the model description) by default. Clear the associated check box to exclude the summary from the report.

The **Acknowledgment** text box is empty by default. Clear the associated check box to exclude the acknowledgment from the report.

The Table of Contents

The **Table of Contents** node ( ) contains the table of contents for the report.

LEVELS

The **Section levels in table of contents** list determines how many section levels to include in the table of contents: 1–5 (default: 2).

TABLE OF CONTENTS

This section contains the current table of contents.

Sections in the Report

The **Section** nodes ( ) provide the structure of the report. You can add sections in several levels by right-clicking a **Section** node to add additional **Section** nodes as subsections. The **Section** node's context menu also contains three submenus:

- **Custom Contents** — for adding custom report component such as paragraphs, images, and tables
- **Model Contents** — for adding information about the model such as the geometry, mesh, physics interfaces, and plot groups
- **Declaration Contents** — for adding information about data declarations defined under the **Declarations** branch in the **Application Builder**.

In addition, you can add **Arrays** and **Scalars** nodes from this menu.

SECTION HEADING

From the **Source** list, select the source of the section's heading:

- **Custom** (the default). You then specify the heading in the **Heading** field.
- **From first child node**. The section heading is the name of the first child node under the **Section** node.

Custom Report Components

Right-click nodes to select and add these report nodes from the **Custom Contents** submenu or directly in the context menu for **Section** nodes under **Documentation**: **Bibliography**, **Code**, **Equation**, **Heading**, **Image**, **List**, **Note**, **Table**, and **Text**.

The custom report components provide basic building blocks for a report as described in Table 21-13.

TABLE 21-13: CUSTOM REPORT AND DOCUMENTATION COMPONENTS

ICON	REPORT COMPONENT	DESCRIPTION
	Bibliography	Adds a reference or bibliography to the report or document. Right-click to add **Reference** nodes. Available under a **Documentation** node only.
	Code	Adds a text block for code using a code (monospace) font. You can also make part of the text using an italic or bold variant of the code font.
	Equation	Adds an equation to the report or document. You can use LaTeX markup directly or import the equation as an image. Under **Equation preview** you can see the equation that the LaTeX commands that you enter create.
	Heading	Adds a heading to the report or document with a text from the **Text** field and a layout for the level (Level 1–Level 6) from the **Level** list. The default is to use the level where the Heading node appears.

TABLE 21-13: CUSTOM REPORT AND DOCUMENTATION COMPONENTS

ICON	REPORT COMPONENT	DESCRIPTION
	Image	Adds an image to the report or document. Select the image source from the **Source** list: **Plot group** to select the plot from available plots in the Plot group list; **External** to use any external image file in PNG, Windows Bitmap (BMP), or JPEG format; or **From Export** to use an Image node under **Results>Export** as the source. Add a **Caption** if desired.
	List	Adds a list. By default, the **Numbered** check box is selected, giving a numbered list; clear the check box for an unordered (bullet) list. Right-click the **List** node to add **List Item** nodes.
	List Item	Right-click the **List** node to add this node with a **Text** area for the list item's contents. Right-click to add **Code**, **Equation**, **Image**, **Table**, **Text**, or other **List** nodes for inserted texts, equations, images, or tables in the list or for creating nested lists.
	Note	Adds a **Note** node for adding one of the following note types, which you select from the **Type** list: **Note** (the default), **Caution**, **Important**, **Model**, **See also**, or **Tip**. From the **Show** list, select **Icon** (the default) to display the icon only, **Description** (the type), or **Icon and description**. Then add the text for the note. Available under a **Documentation** node only.
www	Reference	Right-click a **Bibliography** node to add references. The reference information that you provide is formatted based on the type of reference that you select from the **Type** list: **Journal article** (the default), **Book**, **Conference paper, Thesis**, or **Web**. Available under a **Documentation** node only.
	Table	Adds a table with a **Title** and a **Number of columns** (default: 3 columns). Right-click to add a **Table Heading Row** and **Table Rows**.
	Table Heading Row	Right-click the **Table** node to add this node and then define headings for each column.
	Table Rows	Right-click the **Table** node to add this node and then add the contents for each column in a row of a table.
	Text	Provides a **Text** area where text can be added (including HTML tags for formatting and links).

TEXT FORMATTING TOOLS

For all **Text**, **List Item**, and **Note** nodes' settings, a set of tools above and below the text field provides a quick way to add formatting to the text:

- The formatting tools above the text provide character formats for user-interface labels; emphasis; code (standard, bold, and italic); equation components (bold, variables, and constants); subscript; and superscript. To convert a part of the text to any of these character formats, highlight the text that you want to format and then click **L**, say, to mark the text as a user-interface label (a sans-serif boldface font) enclosed by the opening and closing tags `<l>` and `</l>` before and after the text, respectively.

	Each line in the text editor corresponds to a separate paragraph in the output. Therefore, matching opening and closing tags must appear on the same line.

- From the character tools below the text, click the character that you want to insert, for example, click Ω to insert an uppercase omega as `\Omega` in the text. The character tools include lowercase and uppercase Greek letters and the en-dash (–) and em-dash (—) punctuation symbols.

Click **Preview Selected** ( ) to display a preview of the text, including formatting, in the **Preview** window.

Declaration Components

Use these report components, available from the Section node's **Declaration Contents** context menu, to add standard report tables for data declarations added to the Application Builder's Declarations branch; see the section The Declarations Branch in the *Application Builder Reference Manual* for more information.

Arrays and Scalars

Use the Arrays and Scalars report components to create customized report tables for data from the Declaration and Model branches, as described in Table 21-14.

TABLE 21-14: THE ARRAYS AND SCALARS REPORT COMPONENTS

ICON	REPORT COMPONENT	DESCRIPTION
	Arrays	Adds a table with data from Array 1D and Array 2D declaration nodes defined under the Application Builder's Declarations branch. Under **Columns**, add rows with array data from the **Declarations** branch. 2D arrays are also available and, when added, a 2D array makes up all columns in the table. You can also add a column heading.
	Scalars	Adds a table where the columns to include and the table data rows can be customized. Under **Rows**, add rows with applicable data from the **Declarations** and **Model** branches. Under **Columns**, define which data columns to include and their headings. In the **Columns** section, add the columns you want to display. For each column, enter the heading in the **Heading** column. In the **Data** column, choose the corresponding data to display: **Description**, **Value**, **Name**, **Expression**, or **Unit**.

Mathematical Symbols and Special Characters

COMSOL Multiphysics supports a subset of the LaTeX language for creating equations as part of the documentation or in user-developed physics interfaces and other applications. Commands include Greek and other characters, mathematical symbols and operators, arrows, text and font formats, and environments for text and mathematical typesetting. The following tables and lists contain the commands that are available for creating equations and other mathematical text.

If the LaTeX syntax is not correct or not included in the COMSOL software, the equation preview is empty, but no error appears.

GREEK AND OTHER CHARACTERS

The following table contains the supported lowercase and uppercase Greek letters and the Swedish character Å:

TABLE 21-15: GREEK AND OTHER CHARACTERS

COMMAND (UPPERCASE)	CHARACTER	COMMAND (LOWERCASE)	CHARACTER
		\alpha	α
		\beta	β
\Gamma	Γ	\gamma	γ
\Delta	Δ	\delta	δ
		\varepsilon	ε
		\epsilon	ϵ
		\zeta	ζ
		\eta	η
\Theta	Θ	\theta	θ

TABLE 21-15: GREEK AND OTHER CHARACTERS

COMMAND (UPPERCASE)	CHARACTER	COMMAND (LOWERCASE)	CHARACTER
		\vartheta	ϑ
		\iota	ι
		\kappa	κ
\Lambda	Λ	\lambda	λ
		\mu	μ
		\nu	ν
\Xi	Ξ	\xi	ξ
\Pi	Π	\pi	π
		\varpi	ϖ
		\rho	ρ
\Sigma	Σ	\sigma	σ
		\varsigma	ς
		\tau	τ
\Upsilon	Υ	\upsilon	υ
\Phi	Φ	\phi	ϕ
		\varphi	φ
		\chi	χ
\Psi	Ψ	\psi	ψ
\Omega	Ω	\omega	ω
\AA	Å		

ACCENTS

The following accents are available:

TABLE 21-16: ACCENTS

COMMAND	ACCENT	COMMAND	ACCENT
\acute	$\acute{e}$	\bar	$\bar{e}$
\breve	$\breve{e}$	\check	$\check{e}$
\ddot	$\ddot{e}$	\dot	$\dot{e}$
\grave	$\grave{e}$	\hat	$\hat{e}$
\tilde	$\tilde{e}$	\vec	$\vec{e}$

MATHEMATICAL SYMBOLS AND OPERATORS

The following mathematical symbols and operators are available:

TABLE 21-17: GENERAL SYMBOLS AND MATHEMATICAL OPERATORS

COMMAND	SYMBOL	COMMAND	SYMBOL
\dots	…	\nabla	∇
\ldots	…	\bot	$\bot$
\hbar	ℏ	\diamondsuit	♦

TABLE 21-17: GENERAL SYMBOLS AND MATHEMATICAL OPERATORS

COMMAND	SYMBOL	COMMAND	SYMBOL
\Re	$\Re$	\neg	$\neg$
\forall	$\forall$	\lnot	$\neg$
\cdots	$\cdots$	\imath	$\imath$
\Im	$\Im$	\exists	$\exists$
\prime	$\prime$	\triangle	$\triangle$
\top	$\top$	\heartsuit	$\heartsuit$
\flat	$\flat$	\vdots	$\vdots$
\Diamond	$\Diamond$	\aleph	$\aleph$
\mho	$\mho$	\emptyset	$\emptyset$
\infty	∞	\angle	$\angle$
\clubsuit	$\clubsuit$	\pounds	$\pounds$
\ddots	$\ddots$	\Box	$\square$
\wp	$\wp$	\partial	∂
\surd	$\surd$	\spadesuit	$\spadesuit$
\dag	$\dagger$	\ddag	$\ddagger$
\S	$\S$	\P	$\P$
\copyright	©	\textregistered	®

The following table lists the available "big" mathematical operator as well as binary mathematical operators and relations:

TABLE 21-18: BIG AND BINARY MATHEMATICAL OPERATORS AND RELATIONS

COMMAND	SYMBOL	COMMAND	SYMBOL
\sum	$\sum$	\prod	$\prod$
\coprod	$\coprod$	\int	$\int$
\bigoplus	$\bigoplus$	\bigcup	$\bigcup$
\bigcap	$\bigcap$	\bigsqcup	$\bigsqcup$

TABLE 21-18: BIG AND BINARY MATHEMATICAL OPERATORS AND RELATIONS

COMMAND	SYMBOL	COMMAND	SYMBOL
\oint	$\oint$	\bigotimes	$\bigotimes$
\bigvee	$\bigvee$	\bigwedge	$\bigwedge$
\biguplus	$\biguplus$	\bigodot	$\bigodot$
\pm	$\pm$	\cdot	$\cdot$
\times	$\times$	\cup	$\cup$
\sqcup	$\sqcup$	\vee	$\vee$
\lor	$\vee$	\oplus	$\oplus$
\otimes	$\otimes$	\lhd	$\lhd$
\unlhd	$\unlhd$	\mp	$\mp$
\div	$\div$	\setminus	$\setminus$
\cap	$\cap$	\sqcap	$\sqcap$
\wedge	$\wedge$	\land	$\wedge$
\ominus	$\ominus$	\oslash	$\oslash$
\rhd	$\rhd$	\unrhd	$\unrhd$
\star	$\star$	\ast	$\ast$
\circ	$\circ$	\bullet	$\bullet$
\uplus	$\uplus$	\amalg	$\amalg$
\dagger	$\dagger$	\ddagger	$\ddagger$
\wr	$\wr$	\leq	$\leq$
\le	$\le$	\ll	$\ll$
\prec	$\prec$	\preceq	$\preceq$
\subset	$\subset$	\subseteq	$\subseteq$
\sqsubset	$\sqsubset$	\sqsubseteq	$\sqsubseteq$
\in	$\in$	\vdash	$\vdash$
\mid	$\mid$	\geq	$\geq$
\ge	$\ge$	\gg	$\gg$

TABLE 21-18: BIG AND BINARY MATHEMATICAL OPERATORS AND RELATIONS

COMMAND	SYMBOL	COMMAND	SYMBOL
\succ	$\succ$	\succeq	$\succeq$
\supset	$\supset$	\supseteq	$\supseteq$
\sqsupset	$\sqsupset$	\sqsupseteq	$\sqsupseteq$
\ni	$\ni$	\owns	$\ni$
\dashv	$\dashv$	\parallel	$\parallel$
\notin	$\notin$	\equiv	$\equiv$
\doteq	$\doteq$	\sim	$\sim$
\simeq	$\simeq$	\approx	$\approx$
\cong	$\cong$	\bowtie or \Join	$\bowtie$
\propto	$\propto$	\models	$\models$
\perp	$\perp$	\asymp	$\asymp$
\neq	$\neq$	\ne	$\ne$
\bigtriangleup	$\bigtriangleup$	\bigcirc	$\bigcirc$
\bigtriangledown	$\bigtriangledown$	\triangleleft	$\triangleleft$
\triangleright	$\triangleright$	\diamond	$\diamond$
\smile	$\smile$	\frown	$\frown$

ARROWS

The following table includes the available types of arrows:

TABLE 21-19: ARROWS

COMMAND	SYMBOL	COMMAND	ARROW
\leftarrow or \gets	$\leftarrow$	\rightarrow or \to	$\rightarrow$
\Leftarrow	$\Leftarrow$	\Rightarrow	$\Rightarrow$
\Leftrightarrow	$\Leftrightarrow$	\leftrightarrow	$\leftrightarrow$
\hookleftarrow	$\hookleftarrow$	\leftharpoonup	$\leftharpoonup$
\leftharpoondown	$\leftharpoondown$	\leftrightharpoons	$\leftrightharpoons$
\nearrow	$\nearrow$	\swarrow	$\swarrow$
\leadsto	$\leadsto$	\hookrightarrow	$\hookrightarrow$
\rightharpoonup	$\rightharpoonup$	\rightharpoondown	$\rightharpoondown$

TABLE 21-19: ARROWS

COMMAND	SYMBOL	COMMAND	ARROW
\searrow	↘	\nwarrow	↖
\downarrowtobar	↓	\uparrowtobar	↑
\downtrianglefilled	▼	\uptrianglefilled	▲
\mapsto	↦	\longmapsto	⟼
\longleftarrow	⟵	\longrightarrow	⟶
\longleftrightarrow	⟷	\Longleftarrow	⟸
\Longrightarrow	⟹	\Longleftrightarrow	⟺
\iff	⇔		

DELIMITERS AND ENVIRONMENTS

The following tables includes the available delimiter, spaces, and environments:

TABLE 21-20: DELIMITERS, SPACES, ENVIRONMENTS, BOXES

COMMAND	SYMBOL/EXPLANATION	COMMAND	SYMBOL/EXPLANATION
\uparrow	↑	\updownarrow	↕
\downarrow	↓	\Uparrow	⇑
\Updownarrow	⇕	\Downarrow	⇓
\lbrack	[	\rbrack	]
\lbrace	{	\rbrace	}
\vert	|	\backslash	\
\Vert	‖	\lfloor	⌊
\lceil	⌈	\rfloor	⌋
\rceil	⌉	\langle	⟨
\rangle	⟩	\left	Delimiter sizing (see Note below)
\right	Delimiter sizing (see Note below)	\quad	Explicit horizontal spacing
\qquad	Double explicit horizontal spacing	\raisebox	Creates a box containing text; it is used to raise or lower text.
\mbox	Enclose text in a box	\phantom	Adds an invisible component to, for example, balance subscripts
\begin	Invoke the *array* environment (see Note below)	\end	End the *array* environment (see Note below)
\unicode	Display Unicode characters as supported by the font: \unicode{ÅÄÖ}, for example	\hspace	Horizontal space

	The `\left` and `\right` commands must be used in pairs to provide flexible delimiters that fit the formula inside. Put the desired delimiter — (and), for example — immediately after the `\left` and `\right` commands. For example, `\left( \frac{x}{y} \right)` provides x/y as a fraction within parentheses that fit the expression's size.

	The `\begin` and `\end` commands must be used in pairs to mark the beginning and end of an environment. The only supported environment is the `array`. For example, `\begin{array}{clcr} 1 & 2 & 3 \\ 4 & 5 & 6\end{array}` creates a matrix with 2 rows and three columns.

MATHEMATICAL FUNCTION NAMES

The following function commands provide the function name using a Roman font:

TABLE 21-21: FUNCTIONS

COMMAND	SYMBOL	COMMAND	SYMBOL
\arccos	arccos	\cos	cos
\csc	csc	\exp	exp
\ker	ker	\limsup	limsup
\arcsin	arcsin	\cosh	cosh
\deg	deg	\gcd	gcd
\lg	lg	\ln	ln
\arctan	arctan	\cot	cot
\det	det	\hom	hom
\lim	lim	\log	log
\arg	arg	\coth	coth
\dim	dim	\inf	inf
\liminf	liminf	\max	max
\sinh	sinh	\sup	sup
\tan	tan	\tanh	tanh
\min	min	\Pr	Pr
\sec	sec	\sin	sin

SPECIAL MATHEMATICAL TYPESETTING

There are two mathematical formula components with a special syntax: `\frac` for fractions and `\sqrt` for roots:

- Use the syntax `\frac{`*numerator*`}{`*denominator*`}` to create a fraction. For example, the expression `\frac{n!}{k!(n-k)!}` produces the following output:

$$\frac{n!}{k!(n-k)!}$$

- Use the syntax `\sqrt[`*order*`]{`*expression*`}` to create a root surrounding an expression. The `[`*order*`]` argument is optional; without it, the syntax produces a square root. For example, `\sqrt[n]{1+x^2}` produces the following output:

$$\sqrt[n]{1+x^2}$$

TEXT AND FONT ELEMENTS

The following syntax elements are available for creating different text elements and fonts:

TABLE 21-22: VARIOUS TEXT AND FONT OPERATIONS

COMMAND	EXPLANATION	COMMAND	EXPLANATION
\textsuperscript	Superscripts	^	Superscripts
\textsubscript	Subscripts	_	Subscripts
\overline	Overlining	\underline	Underlining
\overleftarrow	Overlining using a left-pointing arrow	\underleftarrow	Underlining using a left-pointing arrow
\overrightarrow	Overlining using a right-pointing arrow	\underrightarrow	Underlining using a right-pointing arrow
\overbrace	Overlining using a brace	\underbrace	Underlining using a brace
\textnormal	Normal text	\textbf	Boldface text
\textit	Text in italics	\textrm	Text in Roman font
\mathnormal	Normal mathematical mode (the default)	\mathbf	Mathematical boldface text
\mathit	Mathematical text in italics	\mathrm	Mathematical text in Roman font
\displaystyle	Size for equations in display mode	\textstyle	Size for equations in text mode
\scriptstyle	Size for first subscript or superscript	\scriptscriptstyle	Size for subsequent subscripts and superscripts
\emph	Emphasize text in normal (Roman) text mode	\tiny	Smallest font size in text mode
\scriptsize	Second smallest fontsize in text mode	\footnotesize	Third smallest font size in text mode
\small	Fourth smallest fontsize in text mode	\normalsize	Normal font size in text mode
\large	Fifth largest font size in text mode	\Large	Fourth largest font size in text mode
\LARGE	Third largest font size in text mode	\huge	Second largest font size in text mode
\Huge	Largest font size in text mode		

The `\textsuperscript` and ^ syntax alternatives are identical for creating superscripts. Likewise, `\textsubscript` and _ are identical for creating subscripts.

SPECIAL CONTROL SEQUENCES AND CHARACTERS

The following special control sequences and special characters are available:

TABLE 21-23: SPECIAL CONTROL SEQUENCES AND SPECIAL CHARACTERS

SEQUENCE/CHARACTER	DESCRIPTION	SEQUENCE/CHARACTER	DESCRIPTION
\#	# character	\:	Medium space
\$	$ character	\;	Thick space
\%	% character	\!	Negative thin space
\&	& character	$, or /[to start and /] to end	Start and end mathematical mode in text mode
_	_ character	%	Insert comments
\{	{ character	&	Separate items in arrays
\}	} character	~	Nonbreaking space
\\|	|| character	_	Subscript

TABLE 21-23: SPECIAL CONTROL SEQUENCES AND SPECIAL CHARACTERS

SEQUENCE/CHARACTER	DESCRIPTION	SEQUENCE/CHARACTER	DESCRIPTION
\<*space*>	Space	^	Superscript
\,	Thin space	\, {, }, [,]	Command syntax elements

Model Contents — Report Components

Right-click nodes to select items from the **Model Contents** submenu. This group of report components provide information about the model are detailed in these sections:

- Root Report Node
- Component Report Node
- Definitions Report Nodes
- Geometry Report Node
- Material Report Node
- Physics Interface Report Node
- Multiphysics Coupling Report Node
- Mesh Report Node
- Study Report Node
- Solver Report Node
- Results Report Nodes

Root Report Node

Use the **Root** report node ( ), selected from the **Model Contents** submenu, to include information from the model's root node: model name and path, COMSOL version, the used products, and unit system.

Go to Common Results Node Settings for links to information about this section: **Node Properties**.

GLOBAL SETTINGS

Select the **Include name**, **Include path**, **Include COMSOL version**, **Include unit system**, and **Include used products** check boxes as needed.

Component Report Node

Use the **Component** report node ( ), selected from the **Model Contents** submenu or, on Windows only, the **Model Contents** menu button in the **Report** ribbon, to include information from a Component node in the model.

Go to Common Results Node Settings for links to information about this section: **Node Properties**.

COMPONENT SETTINGS

Select the **Component** from the list. Select or clear the **Include unit system**, **Include frames**, and **Include geometry shape order** check boxes as needed.

Definitions Report Nodes

Right-click report section nodes to select items from the **Model Contents** submenu or, on Windows only, click the **Model Contents** menu button in the **Report** ribbon and select gallery items to add the nodes described in this section.

These report components provide information about nodes added to the model under the Definitions and the Global Definitions nodes (for parameters, variables, and functions).

Go to Common Results Node Settings for links to information about this section: **Node Properties**.

PARAMETERS REPORT NODE (GLOBAL DEFINITIONS)

Use the **Parameters** report node (P_i) to include global parameters. Select a Parameters node from the **Source** list. All parameters for the selected node are reported by default; change the settings in the **Include** column in the **Parameters** table if you want to exclude some parameters from your report. The **Clear Selection** ( ) and **Select All** ( ) toolbar buttons apply to all rows of the **Include** column at once.

ABSORBING LAYER

Use the **Absorbing Layer** report node ( ) to include the selection and settings for an absorbing layer present in the model. From the **Source** list, select the Absorbing Layer node to report. Select the **Include selection image** check box to include an image of the referenced node's selection. Select the **Include settings** check box to include nondefault absorbing layer settings.

NONLOCAL COUPLING

Use the **Nonlocal Coupling** report node ( ) to include the settings and a selection image for a nonlocal coupling if it is present in the model. Select the nonlocal coupling from the **Source** list. Select the **Include selection image** check box as needed. The image shows the selection for the nonlocal coupling and is not present if the nonlocal coupling has no selection. Select the **Include settings** check box to include nondefault settings in the report.

COORDINATE SYSTEM

Use the **Coordinate System** report node ( ) to add coordinate system settings information to the report. Select a **Coordinate system** from the list. Select the **Include settings** check box as needed.

DEFORMED GEOMETRY

Use the **Deformed Geometry** report node ( ) to include the settings and a selection image for a deformed geometry.

Select the node to include from the **Source** list. Select the **Include selection image** check box to include an image of the referenced node's selection. Select the **Include settings** check box to include nondefault settings in the report.

EXPRESSION OPERATOR

Use the **Deformed Geometry** report node ( ) to include the settings and a selection image for an expression operator.

Select the node to include from the **Source** list. Select the **Include selection image** check box to include an image of the referenced node's selection. Select the **Include settings** check box to include nondefault settings in the report.

EXTRA DIMENSION

Use the **Extra Dimension** report node ( ) to add extra dimension settings information to the report. Select an **Extra dimension** from the list. Select or clear the **Include unit system**, **Include frames**, and **Include geometry shape order** check boxes as needed.

FUNCTION

Use the **Function** report node (f(x)) to add a function image and the function's settings to the report. Under **Referenced Function**, select a **Function** from the list. Select or clear the **Include image** and **Include settings** check boxes as needed.

INFINITE ELEMENT DOMAIN

Use the **Infinite Element Domain** report node ( ) to include the selection and settings for an infinite element domain if it is present in the model. From the **Source** list, select the Infinite Element Domain node to report. Select the **Include selection image** check box to include an image of the referenced node's selection. Select the **Include settings** check box to include nondefault infinite element settings.

LOAD AND CONSTRAINT GROUPS

Use the **Load and Constraint Groups** report node ( ) to include information about load and constraint groups in the model.

MASS PROPERTIES

Use the **Mass Properties** report node ( ) to include the settings and a selection image for a Mass Properties node. Select the **Mass Properties** node from the list. Select the **Include selection image** check box to include an image of the referenced node's selection. Select the **Include settings** check box to include nondefault settings in the report. The report will include any **Mass Contributions** subnodes using the settings for the parent **Mass Properties** node.

MATRIX VARIABLE

Use the **Matrix Variable** report node ( ) to include the settings and a selection image for a matrix variable node. Select the **Matrix Variable** node from the list. Select the **Include selection image** check box to include an image of the referenced node's selection. Select the **Include settings** check box to include nondefault settings in the report. The report will include any **Mass Contributions** subnodes using the settings for the parent **Mass Properties** node.

MESH PART

Use the **Mesh Part** report node ( ) to include the settings and an image for a mesh part.

Select a **Mesh Part** from the list. Select or clear the **Include image** and **Include statistics** check boxes as needed.

In the **Features** table, all the mesh part's features are listed. To add or remove settings, click in the **Settings** column to cycle between inclusion and exclusion of a feature's settings. The **Clear Selection** ( ) and **Select All** ( ) toolbar buttons apply to all rows of the **Settings** column at once.

METHOD CALL

Use the **Method Call** report node ( ) to include information about customized model-method inputs.

MOVING MESH

Use the **Moving Mesh** report node ( ) to include the settings and a selection image for a moving mesh.

Select the node to include from the **Source** list. Select the **Include selection image** check box to include an image of the referenced node's selection. Select the **Include settings** check box to include nondefault settings in the report.

OPTIMIZATION

Use the **Optimization** report node ( ) to include the settings and a selection image for an optimization node, such as Density Topology or Free Shape Domain.

Select the node to include from the **Source** list. Select the **Include selection image** check box to include an image of the referenced node's selection. Select the **Include settings** check box to include nondefault settings in the report.

PAIR

Use the **Pair** report node ( ) to include the settings and a selection image for identity pairs and contact pairs if present in the model. Select the **Pair** from the list. Select the **Include selection image** check box to include an image of the node's selection. Select the **Include settings** check box to include nondefault settings in the report. The image shows the selection for the pair and is not present if the pair has no selection.

PART

Use the **Part** report node ( ), selected from the **Model Contents** submenu or ribbon menu button, to add the image, units (length and angular), and statistics to the report for specific part features.

In the **Referenced Part** section, select a part from the **Source** list. Select or clear the **Include image**, **Include units** and **Include statistics** check boxes as needed.

In the **Features** table, all the features used in the part's geometry sequence are listed. Click in a feature's table cell in the **Settings** column to toggle between including it in and excluding it from the report. The **Clear Selection** ( ) and **Select All** ( ) toolbar buttons apply to all rows of the **Settings** column at once. For loaded parts, the features are not shown in the COMSOL Desktop, and reporting on their settings is therefore disabled by default.

PARTICIPATION FACTORS

Use the **Participation Factors** report node ( ) to include the properties of a participation factors node in the model.

PERFECTLY MATCHED LAYER

Use the **Perfectly Matched Layer** report node ( ) to include the selection and settings for a perfectly matched layer (PML) if it is present in the model. From the **Source** list, select the **Perfectly Matched Layer** node to report. Select the **Include selection image** check box to include an image of the referenced node's selection. Select the **Include settings** check box to include nondefault PML settings.

PROBE

Use the **Probe** report node ( ) to include the settings and a selection image for a Probe if it is included in the model. Select the **Probe** from the list. Select the **Include selection image** check box as needed. The image shows the selection for the probe and is not present if the probe has no selection. Select the **Include settings** check box to include nondefault probe settings.

REDUCED MODEL

Use the **Reduced Model** report node ( ) to include information about any reduced models defined in the model.

RESPONSE SPECTRUM

Use the **Response Spectrum** report node ( ) to include the properties of a response spectrum node in the model.

Note: The Response spectrum feature requires the Structural Mechanics Module.

SELECTION

Use the **Selection** report node ( ) to include the settings and a selection image for selections. Choose the **Selection** from the list. Select the **Include selection image** check box as needed. The image is not present if the selection is empty. Select the **Include settings** check box to include nondefault settings.

THERMODYNAMICS

Use the **Thermodynamics** report node ( ) to include information about any thermodynamics property packages present in the model.

Note: The Thermodynamics functionality requires the Chemical Reaction Engineering Module.

SHARED PROPERTIES

Use the **Shared Properties** node ( ) to include information about Ambient Properties or Model Inputs nodes. Select the node to include from the **Source** list.

VARIABLES

Use the **Variables** report node ( ) to include global or local variable definitions. Select a Variables node from the **Source** list and, optionally, modify the **Include** column in the table to exclude individual variables from the report as desired. The **Clear Selection** ( ) and **Select All** ( ) toolbar buttons apply to all rows of the **Include** column at once.

Geometry Report Node

Use the **Geometry** report node ( ), selected from the **Model Contents** submenu or ribbon menu button, to add the image, units (length and angular), and statistics to the report for specific geometry features.

	Go to Common Results Node Settings for links to information about this section: **Node Properties**.

REFERENCED GEOMETRY

Select a **Geometry** from the list. Select or clear the **Include image**, **Include units** and **Include statistics** check boxes as needed.

In the **Features** table, all the features used in the geometry sequence are listed. Click in a feature's table cell in the **Settings** column to toggle between including it in and excluding it from the report. The **Clear Selection** ( ) and **Select All** ( ) toolbar buttons apply to all rows of the **Settings** column at once.

Material Report Node

Use the **Material** report node ( ), selected from the **Model Contents** submenu or ribbon menu button, to add the image, selection, and settings to the report for the material property groups in the material.

	Go to Common Results Node Settings for links to information about this section: **Node Properties**.

MATERIAL

Select a **Material** from the list. Select or clear the **Include image**, **Include selection**, and **Include settings** check boxes as needed. The image shows the selection for the material and is not present if the material has no selection or is completely overridden by other materials' selections.

In the **Features** table, all the material properties used in the material are listed. Click in a property group's cell in the **Settings** column to toggle between including its settings in and excluding it from the report. Similarly, the settings in the **Functions** column determine whether to include plots of the function subfeatures of a property group. The **Clear Selection** ( ) and **Select All** ( ) toolbar buttons apply to all rows of the **Settings** and **Functions** columns at once.

Physics Interface Report Node

Use the **Physics Interface** report node ( ), selected from the **Model Contents** submenu or ribbon menu button, to add an image and table showing the selection, equations, settings, and a table of all included physics features to the report.

	Go to Common Results Node Settings for links to information about this section: **Node Properties**. For physics interfaces, you can also choose whether to include a table of used products or not.

REFERENCED PHYSICS INTERFACE

Select a **Physics interface** from the list. Select or clear the **Include selection image**, **Include feature table**, **Include selection table**, **Include equations**, and **Include settings** check boxes as needed.

An image in the report shows the selection for the physics interface and is not present if the physics interface has no selection.

In the **Features** table, all the physics interface features are listed. To add or remove settings and selections, in the **Settings** and **Selection** columns, click to toggle between inclusion and exclusion of a feature's settings and selection image, respectively. The **Clear Selection** ( ) and **Select All** ( ) toolbar buttons apply to all rows of the **Settings** and **Selection** columns at once.

Under the **Features** table, you can also select from the check boxes to include variables, shape functions, weak expressions, and constraints contained in the physics node's **Equation View** subnode.

Select the **Include variables**, **Include shape functions**, **Include weak expressions**, and **Include constraints** check boxes as needed.

Multiphysics Coupling Report Node

Use the **Multiphysics Coupling** report node ( ), selected from the **Model Contents** submenu or ribbon menu button, to add an image and table showing the selection, equations, and settings to the report.

	Go to Common Results Node Settings for links to information about this section: **Node Properties**. For multiphysics couplings, you can also choose whether to include a table of used products or not.

REFERENCED MULTIPHYSICS COUPLING

Select a **Multiphysics coupling** from the list. Select or clear the **Include selection image**, **Include feature table, Include selection table**, **Include equations**, and **Include settings** check boxes as needed.

An image in the report shows the selection for the multiphysics coupling and is not present if the multiphysics coupling has no selection.

You can also select to include variables, shape functions, weak expressions, and constraints contained in the multiphysics coupling node's **Equation View** subnode.

Select the **Include variables**, **Include shape functions**, **Include weak expressions**, and **Include constraints** check boxes as needed.

Mesh Report Node

Use the **Mesh** report node ( ), selected from the **Model Contents** submenu or ribbon menu button, to add the image and statistics to the report.

	Go to Common Results Node Settings for links to information about this section: **Node Properties**.

MESH

Select a **Mesh** from the list. Select or clear the **Include image** and **Include statistics** check boxes as needed.

In the **Features** table, all the mesh features are listed. To add or remove settings, click in the **Settings** column to cycle between inclusion and exclusion of a feature's settings. The **Clear Selection** ( ) and **Select All** ( ) toolbar buttons apply to all rows of the **Settings** column at once.

Study Report Node

Use the **Study** report node ( ), selected from the **Model Contents** submenu or ribbon menu button, to add settings for a Study in the model to the report.

	Go to Common Results Node Settings for links to information about this section: **Node Properties**.

STUDY

Select a **Study** from the list. Optionally, you can include a table with information about computation time, CPU, and operating system in the report by selecting **Include computation information** (the default setting).

In the **Features** table, all the studies are listed. To add or remove settings, click in the **Settings** column to cycle between inclusion and exclusion of a feature's settings. The **Clear Selection** ( ) and **Select All** ( ) toolbar buttons apply to all rows of the **Settings** column at once.

Solver Report Node

Use the **Solver** report node ( ), selected from the **Model Contents** submenu or ribbon menu button, to add settings for the solver nodes in the solver sequence that is referenced in the Sequence list.

	Go to Common Results Node Settings for links to information about this section: **Node Properties**.

SOLVER

Select a **Sequence** from the list. Select the **Include log** to include the solver log.

In the **Features** table, all the solver features are listed. To add or remove settings, click in the **Settings** column to cycle between inclusion and exclusion of a feature's settings. The **Clear Selection** ( ) and **Select All** ( ) toolbar buttons apply to all rows of the **Settings** column at once.

Results Report Nodes

Right-click to select items from the **Model Contents** submenu and to add the nodes described in this section. These report components provide information about nodes added to the model under Results. For any of these, click the **Go to Source** button ( ) to move to the source node under the applicable node under **Results**.

	Go to Common Results Node Settings for links to information about this section: **Node Properties**.

PARAMETERS REPORT NODE (RESULTS)

Use the **Parameters** report node ( ), selected from the lower part of the **Model Contents** submenu or ribbon menu button, to include the Parameters in the model. All parameters are reported by default; change the settings in the **Include** column in the **Parameters** table if you want to exclude some parameters from your report.

DATASET

Use the **Dataset** report node ( ), selected from the **Model Contents** submenu or ribbon menu button, to include the settings and a selection image for the referenced dataset. Select a **Dataset** from the list or click the **Datasets**. Select or clear the **Include settings** and **Include selection image** check boxes as needed.

DERIVED VALUES

Use the **Derived Values** report node ( ), selected from the **Model Contents** submenu or ribbon menu button, to add derived values settings information to the report. Select the derived values node to use from the **Source** list. Select or clear the **Include settings** check box as needed.

EVALUATION GROUP

Use the **Evaluation Group** report node ( ), selected from the **Model Contents** submenu or ribbon menu button, to add information about an evaluation group and its subnodes to the report. Select the evaluation group to use from the **Source** list. Select or clear the **Include settings** check box as needed. If the associated result table is very large, you can choose to clear the **Include result table** check box, which is selected by default for all report types.

In the **Features** table the selected group's evaluation-feature subnodes are listed. To add or remove settings, click in the **Settings** column to cycle between inclusion and exclusion of a feature's settings. The **Clear Selection** ( ) and **Select All** ( ) toolbar buttons apply to all rows of the **Settings** column at once.

EXPORT

Use the **Export** report node ( ), selected from the **Model Contents** submenu or ribbon menu button, to add any of the images or animations added to the model Export branch. From the **Object** list, select from any available image or animation objects to include in the report (or select **None**).

	Animations are not supported for reports in Microsoft Word format; if included, they are silently ignored when writing the report.

After selecting the **Object**, select an option from the **Size** list — **Object setting** to use the width and height specified in the image or animation settings or **Report image type** to use the image format specified in the report's root node settings.

Select an option from the **File format** list — **Object setting** to use the file format for the selected object or **Report image type** to be determined by the image type setting specified in the report's root node.

In the **Caption** field, enter text as needed. By default, this field is left empty and no caption is included in the report.

PLOT GROUP

Use the **Plot Group** report node ( ), selected from the **Model Contents** submenu or ribbon menu button, to add plots to the report. Select the **Plot group** from the list. From the **Caption source** list, select **From plot group title** (the default) to use the plot's title as the caption, **Custom** to enter a different **Caption** in the field, or **None** for no caption. Select **Zoom extents** if you want a zoom to extents action to be performed when the image is generated.

TABLE

Use the **Table** report node ( ), selected from the **Model Contents** submenu or ribbon menu button, to add the table settings to the report. Select the **Table** from the **Source** list in the **Table** section. See Number Format for information about settings in that section.

Declaration Contents

Right-click nodes to select items from the **Declarations Contents** submenu. This group of report components provides information about declarations in applications created using the Application Builder. See The Declarations Branch in the Application Builder documentation.

CHOICE LIST

The **Choice List** report node ( ) adds a list of combo boxes, lists, and radio buttons.

UNIT SET

The **Unit Set** report node ( ) adds a unit set from an application to the report.

STRING

The **String** report node (abc) adds a list of named strings that are included with form objects and methods.

DOUBLE

The **Double** report node (8.5) adds a list of named scalar double floating-point values that are included with form objects and methods.

BOOLEAN

The **Boolean** report node ( ) adds a list of named scalar Booleans that are included with form objects and methods.

INTEGER

The **Integer** report node (123) adds a list of named scalar integers that are included with form objects and methods.

ARRAY ID STRING

The **Array ID String** report node ( ) adds a list of named string arrays that are included with form objects and methods.

ARRAY ID DOUBLE

The **Array ID Double** report node ( ) adds a list of named double floating-point arrays that are included with form objects and methods.

ARRAY ID BOOLEAN

The **Array ID Boolean** report node ( ) adds a list of named Boolean arrays that are included with form objects and methods.

ARRAY 1D INTEGER

The **Array 1D Integer** report node (123) adds a list of named integer arrays that are included with form objects and methods.

ARRAY 2D STRING

The **Array 2D String** report node (abc) adds a list of named 2D string arrays (matrices) that are included with form objects and methods.

ARRAY 2D DOUBLE

The **Array 2D Double report** node (8.5) adds a list of named 2D arrays (matrices) of double floating-point values that are included with form objects and methods.

ARRAY 2D BOOLEAN

The **Array 2D Boolean** report node (☑) adds a list of named 2D Boolean arrays (matrices) that are included with form objects and methods.

ARRAY 2D INTEGER

The **Array 2D Integer** report node (123) adds a list of named 2D integer arrays (matrices) that are included with form objects and methods.

Printing and Capturing Screenshots

Printing from the COMSOL Desktop

To print the contents in the **Graphics** window or other plot windows, click the **Print** button ( ) on the Graphics window toolbar or press Ctrl+P.

In the **Print** dialog box, follow these steps:

1. Under **Image**, from the **Size** list, select **Current** to use the current size of the **Graphics** window. Of the settings below, only the **Zoom extents** and **Antialiasing** check boxes are then available. Alternatively, select **Manual (web)** or **Manual (print)** to set the print size and resolution manually. Choosing **Manual (web)** provides default settings identical to those used when creating an image snapshot for web use.
2. Select a **Unit** to define the image size: **Millimeters (mm)** (the default for print), **Inches (in)**, or **Pixels (px)** (the default for web).
3. Select the **Lock aspect ratio** check box to maintain the calculation of the width and height (if one or the other is changed).
4. Enter the **Width** and **Height** in the units selected for the image.
5. Enter the **Resolution** for the image in DPI (dots per inch) as a value between 10 and 1200 DPI. The default value is 300 DPI for print and 96 DPI for web.

   Under these settings, the dialog box shows the resulting image size and the size on the screen in pixels.
6. The **Zoom extents** check box is cleared by default. Select it to add a zoom to extents before printing.
7. The **Antialiasing** check box is cleared by default. Click to select if required. Antialiasing minimizes distortion such as jagged edges in the image.
8. Under **Layout**, the **Title**, **Legend**, **Axes**, and **Logotype** check boxes are selected by default to display the information on the screenshot if you select the **Include** check box. You can then also edit the selections for including these parts of the plot.
9. Enter a **Font** size in points (pt) as a number between 1 and 1000 pt. The default value is 9 pt.
10. Select a **Background**: **Current** or **Color**. Current is the background color in the plot window on the COMSOL Desktop. For **Color**, click the **Color** button to select a custom color from the color palette that opens.
11. Click **OK** to print the contents of the plot window. Typically the operating system's **Print** dialog box first opens for selecting a printer, the number of copies, and other printer settings.

For generating snapshots of a plot window to a file or the clipboard, click the **Image Snapshot** button ( ) in the **Graphics** window toolbar (see below).

Capturing and Copying Screenshots

To quickly capture a screenshot image of a plot, click the **Quick Snapshot** button ( ) on the Graphics window toolbar, or press Ctrl+L. From the **Quick Snapshot** button you can choose any of the available preset image snapshot settings. The screenshot image is then available for the output specified for the chosen preset (the clipboard, a file, or PowerPoint) so that you can paste it or add it to, for example, a document or a presentation. You can also use the **Image Snapshot** button ( ) on the **Graphics** window toolbar to capture an image snapshot of a plot and to access image settings for more control of the snapshot. To do so, follow the steps below. For the image generation, you can enable hardware-accelerated image export as an alternative to software rendering; see Image for more information.

1 In the **Graphics** window or any other plot window, click the **Image Snapshot** button ( ) to open the **Image Snapshot** dialog box.

2 From the **Preset** list, you can choose from predefined and user-defined sets of image snapshot settings: **Current**, **Manual (web)**, **Manual (print)** (the default), or **Presentation**, which are tailored settings for image snapshots suitable for a web page, for printing, or for a PowerPoint presentation. The **Current** option uses the current size on the screen (which is displayed), so only the **Zoom extents** and **Antialiasing** check boxes are available under **Image**. If you have modified the image snapshot, you can save those settings as another preset option. To do so, click the **Save as Preset** button ( ) and provide a name for the user-defined preset option in the **Name** field of the **Save as Preset** dialog box that opens. If you do not want to keep an added user-defined preset option, click the **Remove Preset** button ( ). If you have made changes to a preset option and want to return to its default values, click the Reset **Preset to Default** button at the bottom of the **Image Snapshot** dialog box.

3 Under **Image**, you can choose from a number of predefined image size settings from the **Size** list, where **Current** is the default. Select **Manual (web)** to define the image size manually using the settings below set up for a snapshot suitable for the web (using pixels as the default unit and 96 DPI as the default resolution) or select **Manual (print)** to define the image size manually using the settings below set up for a printout of the snapshot (using millimeters as the default unit and 300 DPI as the default resolution).

4 Under **Image**, select a **Unit** to define the image size: **Millimeters (mm)**, **Inches (in)**, or **Pixels (px)**.

5 Select the **Lock aspect ratio** check box to maintain the calculation of the width and height.

6 Enter the **Width** and **Height** in the units selected for the image.

7 Enter the **Resolution** for the image in DPI (dots per inch) as a value between 10 and 1200 DPI.

The software computes and displays values for **Image size** and **Size on screen** based on the inputs above so that you can check that the image size is suitable. If you select **Current** from the **Size** list, only the **Size on screen** appears.

8 The **Zoom extents** check box is cleared by default. Select it to add a zoom to extents before printing.

9 The **Antialiasing** check box is selected by default. Click to clear if required. Antialiasing minimizes distortion such as jagged edges in the image.

10 Under **Layout**, the **Title**, **Legend** (1D graphs) or **Color legend** (2D plots), **Axes**, **Grid** (1D graphs), and **Logotype** check boxes (1D and 2D images) or the **Title**, **Color legend**, **Grid**, **Axis orientation**, and **Logotype** check boxes (3D images) are selected by default to display the information on the screenshot if you select the **Include** check box. You can then also edit the selections for including or excluding these parts of the plot. The **Include** check box is selected by default for 1D images.

For the glTF file format (3D result plots only), the **Include line segments** check box is selected by default. Clear that check box to exclude line segments, which can be useful for glTF viewers that do not support line segments.

11 Enter a **Font** size in points (pt) as a value between 1 and 1000 pt. The default value is 9 pt. This font size overrides the system font size used in the COMSOL Desktop.

12 Select a **Background**: **Current**, **Color**, or **Transparent**. The **Current** setting is the background color in the plot window on the COMSOL Desktop. For **Color**, click the **Color** button to select a custom color from the color palette that opens. For image snapshots saved to file, the **Transparent** option (which is the default background) is only applicable for the PNG file format.

	Transparent image support includes two parts: Raw data of the PNG image and an external renderer (image viewer). The COMSOL Multiphysics software can provide a correct PNG image itself but cannot control the external renderer.

When importing an image with a transparent background to another Windows application, first save the image as a file rather than saving it to the clipboard. In some cases, the transparent background is not preserved if you copy an image via the clipboard.

13 Under **Output**, select the target: **Clipboard** (the default) to copy the image to the clipboard, **File** to save the image to a file, or **PowerPoint** to use the image in Microsoft® PowerPoint. The **PowerPoint** target is only applicable to, for example, a geometry, mesh, or plot because the output is an image of the selected feature rather than the image in the **Graphics** window.

14 If **File** is selected:

- **a** Select a file **Format**: **BMP**, **EPS** (1D plots only), **JPEG**, **TIFF**, **GIFF**, **PNG** (the default), or **glTF** (results plots in 3D only. For the JPEG format, you can also enter a quality parameter by selecting the **Quality** check box and entering a quality level between 1 and 100 (default: 92). Usually, a high quality level in the range of 90–95 is recommended.
- **b** Enter a file path in the **Filename** field, or click **Browse** to specify the name and location of the file.
- **c** Select the **Create unique filename by adding incremental number** check box (cleared by default) to make the filenames unique by appending a numerical suffix.

15 If **PowerPoint** is selected:

- **a** Select the **Lock view** check box if you want to lock the view in PowerPoint. Saved camera settings are then used when you update the image from PowerPoint. If this check box is cleared, the current camera settings are used when updating the image.

16 Click **OK** to generate an image snapshot and close the **Image Snapshot** dialog box.

Printing from the COMSOL Desktop

Creating PowerPoint Presentations with Images Linked to Models

To insert screenshot images of, for example, geometry and result plots in a PowerPoint® presentation in a way that the images remain linked to the model to enable future updates, follow the steps in the section Capturing and Copying Screenshots, and make sure that in Step 13 you select the output target **PowerPoint**. After the images are generated switch to PowerPoint, and from the **COMSOL** ribbon tab select **Paste** ( ), or press Ctrl-V, to insert the last generated image. Alternatively, to insert one of the earlier generated images, on the **COMSOL** tab click **Clipboard** ( ) and select the image to be inserted. Images that are added to a presentation according to the above steps retain a reference to their source models and can be updated from PowerPoint, or using a batch tool that can update several presentations.

THE COMSOL INTERFACE ADD-IN FOR POWERPOINT

The interface between COMSOL and PowerPoint that enables working with linked images is installed together with COMSOL Multiphysics. The installer registers with PowerPoint the add-in *COMSOL Interface*, which is listed on the **Add-ins** page of the **PowerPoint Options** window that is accessible from the **File** backstage view in PowerPoint. When the interface add-in is loaded it provides the following additions to the PowerPoint user interface:

- The COMSOL ribbon tab where you can insert and update images
- The COMSOL tab in the File Backstage View where you can manage the source references for the linked images
- The COMSOL Image tools tab where you can change image settings
- The COMSOL contextual menu where you can quickly access the mostly used commands

UPDATING IMAGES IN PRESENTATIONS

Images that are linked to models can be easily updated when needed while preserving the image formatting applied in the PowerPoint presentation. During the update process the images are generated by COMSOL Multiphysics (if the source models are open) or by an automatically started COMSOL Multiphysics server that opens the referenced models. To update linked images from inside PowerPoint follow one of the methods below.

- From the **COMSOL** ribbon tab click **Update All Images** ( ) to update all linked images in the presentation.
- From the presentation, select the image you want to update, then do one of the following:
  - From the **COMSOL** ribbon tab click **Update Image** ( )
  - From the **COMSOL Image** tools tab click **Update Image** ( )
  - Right-click the image and select **COMSOL>Update Image** ( )

To prevent an image to be updated when you update all images in a presentation select the image, then from the **COMSOL Image** tools tab select the **Lock Image** ( ) toggle button, or right-click the image and select **COMSOL>Lock Image**.

CHANGING THE IMAGE SETTINGS

When you generate a snapshot with the output target set to PowerPoint, as described in the section Capturing and Copying Screenshots, the image settings are saved together with the image that you insert into the presentation. To edit the image settings for a linked image in a PowerPoint presentation select the image, then select the **COMSOL Image** tools tab where in the **Image** and **Layout** sections you can do the following:

- Enter the **Width** and **Height** in the units selected for the image.
- Enter the **Resolution** for the image in DPI (dots per inch) as a value between 10 and 1200 DPI.
- Select the **Lock aspect ratio** check box to maintain the calculation of the width and height.
- The **Antialiasing** check box is selected by default. Click to clear if required. Antialiasing minimizes distortion such as jagged edges in the image.
- Select a **Unit** to define the image size: **Millimeters (mm)**, **Inches (in)**, or **Pixels (px)**.
- Select the **Lock view** check box if you want to lock the view for the image. Saved camera settings are then used when you update the image from PowerPoint. If this check box is cleared, the current camera settings are used when updating the image.
- The **Zoom extents** check box is cleared by default. Select it to add a zoom to extents before regenerating the image.
- The **Title**, **Legend**, **Grid**, **Axes**, **Logotype** (1D images) or **Title**, **Legend**, **Axes**, **Logotype** (2D images) or the **Title**, **Legend**, **Grid**, **Axis orientation**, and **Logotype** check boxes (3D images) control the information displayed on the screenshot. You can edit the selections for including or excluding these parts of the plot.
- Enter a **Font** size in points (pt) as a value between 1 and 1000 pt. The default value is 9 pt. This font size overrides the system font size used in the COMSOL Desktop.
- Select a **Background**: **Basic Colors**, **Transparent**, or **Define Custom Colors**. For **Basic Colors**, select a color from the color palette. For **Define Custom Colors**, define a color in the **Define Custom Colors** window that opens.

To regenerate the image after changing the image settings, from the **COMSOL Image** tools tab click **Update Image** ( ).

MANAGING THE IMAGE SOURCE REFERENCES

Linked images in a PowerPoint presentation retain a reference to their source, i.e. to the model and feature node that are the source for the image. You can view and edit all references in a presentation from the **References** page on the **COMSOL** tab of the **File** backstage view in PowerPoint. To access this page select the **COMSOL** ribbon tab, then click the **View All References** ( ) button. Alternatively, select the **File** tab, then select **COMSOL > References** ( ).

Referenced Models

The source models for the images in the presentation are listed in the **Referenced Models** column of the **References** page. To change a source model click the link for the model, then in the **Browse** window that opens select a model file, and finally click **Use As Source** to confirm your selection and to close the window.

Selected the **Use relative path** check box to enable using file paths relative to the **Working directory**. Click the link to the change the working directory. Note that when switching to relative paths or changing the working directory the software will not move any files, and you will have to make sure to move or copy the necessary files to the new location.

By default the absolute path to the referenced models is saved with the images. To change this behavior select the preference option **In new presentations use > Relative paths**, located on the **COMSOL** tab of the **File** backstage view.

If you want to share a presentation but do not want to reveal personal information, click the **Clear File Paths** ( ) button to keep only the filename portion of the paths. Updating images will still be possible if the source models are found in the same folder as the presentation, or alternatively by using the model links to find and save their location again.

Referenced Nodes

The source feature nodes for the images are listed in the **Referenced Nodes** column. To select a different source node click the source node link to open the **Edit Reference** window. You can also open the **Edit Reference** window by clicking the source node displayed in the **COMSOL Image** tools tab after selecting the image, or by right-clicking the image and from the menu selecting **COMSOL > Edit Reference**.

The **Edit Reference** window displays the source Model Tree with only the feature nodes that are possible to use as image sources. To display the Model Tree when you open the window a COMSOL Multiphysics server is automatically started in the background and the model is loaded, unless it is already open in COMSOL Multiphysics or a connected COMSOL Multiphysics server. Double click a node from the Model Tree to set it is source. Alternatively, select the node then click **Use as Source**. To change the source model click the model link in the **Model** section of the window and browse to a new model. To accept the changes and to close the **Edit Reference** window click **OK**.

To check that all referenced source models and feature nodes in a presentation can be found click the **Verify All** button. The result of the check is displayed in the **Status** section, and any missing models and nodes are indicated by a small warning triangle.

To remove all references to models from the presentation and keep only the images click the **Delete All** ( ) button. Alternatively, to delete the reference for a single image select the image, then from the **COMSOL Image** tools tab select the **Delete Reference** ( ) button, or right-click the image and select **COMSOL>Delete Reference**. Note that after deleting a reference the image will not be linked to a COMSOL model and will not be possible to update.

MANAGING SERVER CONNECTIONS

The default settings using the interface for PowerPoint® consist of starting a new COMSOL Multiphysics server on the local machine when required for updating images. To connect to an already running COMSOL Multiphysics server or COMSOL Server follow these steps:

1 In PowerPoint, go to the **File** ribbon tab and select **COMSOL**.

2 From the **COMSOL** page select **Server** and click **Connect** ( ).This opens the **Connect to Server** window.

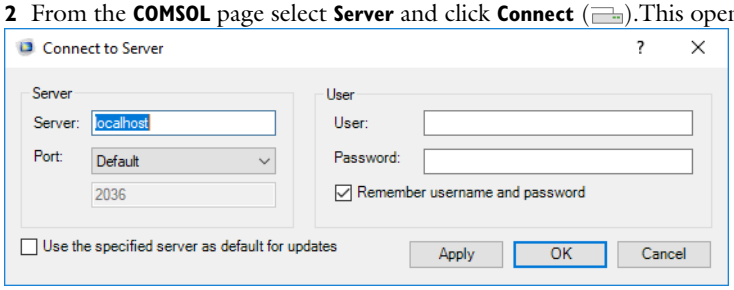

3 In the **Server** text field enter the name of the COMSOL Multiphysics server or COMSOL server (or server IP address). Enter `localhost` if the server and PowerPoint are running on the same machine.

4 In the **Port** menu list select **manual** if the server is not listening to the default port number (2036). The port number is displayed in the server window.

5 In the **User** and **Password** text field enter the login information requested by the server.

6 Optionally select the **Use specified server as default for updates** check box to automatically connect to the specified server when updating images in the future.

7 Click **OK** to connect to the server.

Disconnecting from a COMSOL Server

To disconnect the interface in PowerPoint from a connected COMSOL server, go to the **File** ribbon tab in PowerPoint, and select **COMSOL**. In the **COMSOL** backstage view select **Server** and click **Disconnect** ( ).

Unloading Models From the Server

To remove models from a connected COMSOL Multiphysics server or COMSOL server go to the **File** ribbon tab and click **COMSOL**. In the **COMSOL** backstage view click **Server** ( )and then **Unload Models** ( ).

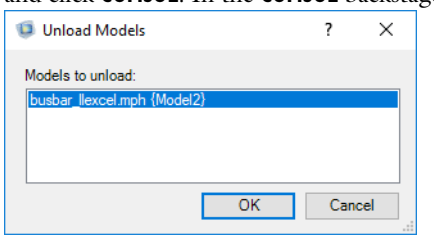

In the **Unload Models** window, select the models you want to unload from the server and click **OK**.

Setting and Clearing the Thumbnail Image

To illustrate the application, you can save a thumbnail image that displays in The Root Settings and Properties Windows and when opening a model in the **Application Libraries** window. By default, this image is also included on the title page when you generate a report of your model. You can set the thumbnail from a view in the Graphics window or by importing an external file.

To set the thumbnail from the Graphics window:

1 Decide which plot to use as the thumbnail. In the **Model Builder** under **Results**, click the plot group of the plot you want to use so that it displays in the **Graphics** window.

2 Click the root node (the first node in the model tree).

3 In the **Settings** window for the root node under **Thumbnail** in the **Presentation** section, click **Set from Graphics Window**. Save the model file to update the image.

If required, make adjustments to the image in the Graphics window using the toolbar buttons until the image is one that is suitable to your purposes, or choose another plot and repeat the steps.

To set the thumbnail from an external image file of PNG or JPEG format:

1 Click the root node.

2 In the **Settings** window for the root node under **Thumbnail** in the **Presentation** section, click **Load from File**.

3 Browse to the folder where your image file is located, select the file, and then click **Open**.

The imported image is displayed in the **Thumbnail** area. While a large image may not fit inside this area, it can still be suitable for a report's title page. For best results in reports, use images with a resolution of at least 150 DPI.

When a thumbnail has been set, you can clear it by clicking the **Clear** button.

22

Running COMSOL Multiphysics

This chapter provides an overview of the different ways that you can run the COMSOL Multiphysics® software in addition to running the COMSOL Desktop® graphical user interface on a dedicated computer, including client-server and distributed-memory architectures. For information about COMSOL Server™ and running COMSOL Multiphysics applications as a client, see the *COMSOL Server Manual*. COMSOL Multiphysics and COMSOL Server support cloud computing. See https://www.comsol.com/running-comsol-software-in-the-cloud.

In this chapter:

- Running COMSOL Multiphysics
- COMSOL Multiphysics Client-Server Architecture
- Running COMSOL Multiphysics in Client-Server Mode
- Running COMSOL in Parallel
- The COMSOL Commands

Running COMSOL Multiphysics

The primary way to access the COMSOL Multiphysics functionality is through the COMSOL Desktop. This section describes alternative means of accessing the functionality in the COMSOL Multiphysics software, such as running COMSOL Multiphysics in batch mode and in different client-server configurations.

Windows and the Cross-Platform Desktop

COMSOL Multiphysics has a Windows® graphical user interface that is started by default. There is also a cross-platform graphical user interface, which is the same on Windows, Linux, and macOS. You can start the cross-platform interface on Windows by double-clicking the file `comsolxpl.exe` in the `bin\win64` folder in the COMSOL installation directory. The cross-platform interface is the only one available on Linux and macOS.

COMSOL Multiphysics Client-Server Architecture

The COMSOL Multiphysics client-server architecture lets you access the COMSOL Multiphysics server — the computational engine in COMSOL Multiphysics — as a separate process. The COMSOL Multiphysics server is a single user server allowing multiple connections by the same user.

You must have a floating network license (FNL) to run a COMSOL Multiphysics server and a COMSOL Multiphysics client on separate computers. Any valid COMSOL Multiphysics license is sufficient to run the Multiphysics client and the Multiphysics server on the same computer.

To start the COMSOL Multiphysics server under windows, just click **COMSOL Multiphysics Server** in the **Client-Server** folder under your COMSOL Multiphysics installation in the Start menu. On Linux and macOS, type the command `comsol mphserver` to start the COMSOL Multiphysics server.

For more options for starting the COMSOL Multiphysics server, see the section The COMSOL Commands for your platform. Also see the section Running COMSOL Multiphysics in Client-Server Mode for detailed general information about client-server options.

	The license server is not the same as a COMSOL Multiphysics server. The license manager can run on a computer different from both the ones used by COMSOL Desktop and COMSOL Multiphysics server.

Parallel Computing with COMSOL Multiphysics

COMSOL Multiphysics supports two mutual modes of parallel operation: shared-memory parallel operations and distributed-memory parallel operations, including cluster support.

SHARED-MEMORY PARALLEL MODE

The shared-memory parallel mode is suitable for running COMSOL Multiphysics on modern multicore or multiprocessor computers. This parallel mode of operation is available for all platforms and all license types. By default, COMSOL Multiphysics uses the shared memory parallel mode and allocates all cores on the computer.

For options for controlling the number of cores used and other options, see the section The COMSOL Commands for your platform. Also see the section Shared-Memory Parallel COMSOL for detailed general information.

DISTRIBUTED-MEMORY PARALLEL MODE

The distributed-memory parallel mode lets you run COMSOL Multiphysics on a Windows HPC cluster or a Linux cluster.

See Distributed-Memory Parallel COMSOL for details about running the COMSOL software in parallel architectures, including Windows and Linux clusters. For more options on how to run COMSOL Multiphysics on a cluster from the command line, see the section The COMSOL Commands for your platform.

LiveLink for MATLAB

The LiveLink™ *for* MATLAB® provides access to COMSOL Multiphysics from MATLAB. From the MATLAB prompt, you access COMSOL models through a client-server connection to a COMSOL Multiphysics server. You access the model through the COMSOL API and its Java® interface in MATLAB. In addition, there are M-file wrapper functions that help you perform tasks such as displaying graphics using MATLAB figure windows or fetching data from the model object. The model can be accessed simultaneously from the COMSOL Desktop running in client mode connected to the same server as MATLAB. See the LiveLink™ *for* MATLAB® manuals for more information.

LiveLink for Excel

The LiveLink™ *for* Excel® provides access to COMSOL Multiphysics from Excel. From an Excel sheet, you can access a COMSOL model through a client-server connection to a running COMSOL Multiphysics server. The model can be accessed simultaneously from the COMSOL Desktop running in client mode connected to the same server as Excel. See the LiveLink™ *for* Excel® manuals for more information.

COMSOL Batch

The COMSOL Multiphysics batch mode provides a way to run COMSOL Multiphysics without a graphical user interface. The COMSOL batch mode allows you to run both Model MPH-files and compiled model files for Java (class files).

You can control the options for running the COMSOL software in batch mode from the **Study** node in the **Model Builder**. To enable the Batch feature, click the **Show More Options** button ( ) and select **Batch** or **Batch and Cluster** (if your license includes cluster computing) in the **Show More Options** dialog box. Then in the **Model Builder**, right-click a **Study** node and select **Batch**. Also see Batch (Job Configurations).

You can also run COMSOL batch using a command-line interface, as described in COMSOL Batch Commands (Windows) and COMSOL Batch Commands (Linux).

In batch mode, you can monitor the memory usage reported in the log as lines of the form

```
Memory: RAM/MAXRAM VIRT/MAXVIRT
```

where `RAM` is the current memory usage in MB, and `VIRT` is the current virtual memory usage in MB. The maximum measured usage is reported in `MAXRAM` and `MAXVIRT`, respectively. The log only reports changes to the memory usage. You can also monitor the current progress, which is reported as lines in the log of the form

```
Current Progress: 53%
```

where the percentage indicates the currently estimated progress.

For options for controlling the batch command, see the section The COMSOL Commands for your platform.

COMSOL BATCH UNDER A FLOATING NETWORK LICENSE

If you have licensed a floating network license, you are allowed to run a simultaneous "batch job" along with your COMSOL Multiphysics GUI. Such batch jobs have the capacity to run parametric sweeps on multiple computers, as long as the changes to your model include only changes to parameters. This batch license functionality is only available for Cluster Computing and Cluster Sweep nodes, and you must select the **Use batch license** check box in the **Cluster Computing** and **Cluster Sweep** nodes' **Settings** windows. It is not necessary to use the same user account for the Multiphysics GUI and the batch job. However, the same account must be used by all process instances of a batch job. Each additional floating network license lets you run a separate independent batch job (with different models) on multiple computers.

COMSOL API

The COMSOL API is a Java-based programming interface for COMSOL Multiphysics. The COMSOL API can be used for a variety of purposes, such as developing standalone applications based on COMSOL functionality or running a model file for Java from the COMSOL Desktop or using the available batch command.

To run a model file for Java from the COMSOL Desktop, compile it using the `comsol compile` command. This command is called `comsolcompile` on Windows® and `comsol compile` on other platforms. The compilation gets you a model class file corresponding to the model file for Java. Launch the model class file by choosing **Open** in the **File** menu and then selecting a **Model Class File** under **File name**. With COMSOL Compiler™, you can also use this command to create standalone executable applications.

To create a standalone application using the COMSOL API, you need to develop a text-based or GUI-based interface to the functionality and compile it using the COMSOL compile command. The application can be run in *standalone mode* that links your Java® application directly to the COMSOL code (as a single process). You can also choose to run the application in client-server mode by connecting to a COMSOL Multiphysics server.

To see options for compiling Java files, see The COMSOL Commands for your platform. For more comprehensive information about the COMSOL API, see the *COMSOL Programming Reference Manual* and the *Application Programming Guide*.

Security Settings

The COMSOL software includes security settings for controlling access to, for example, system properties, file systems, and runtime security settings from methods and external libraries, primarily for use in applications created using the Application Builder.

	If you have selected the **Set permanent security policy for applications** check box when installing the COMSOL software, none of these security settings are available.

The following security settings are available on the **Security** page in the **Preferences** dialog box:

- Select the **Allow batch jobs** check box to allow batch jobs. This restriction affects the Batch, Batch Sweep, Cluster Computing, and Cluster Sweep nodes in the COMSOL Desktop model tree.
- Select the **Allow external processes** check box to allow applications to start external processes on the computer. This includes using the built-in `executeOS()` method.

	The external process security settings refers to method code being able to launch arbitrary executables, not COMSOL or its LiveLink products launching their helper executables.

- Select the **Allow external libraries** check box to allow external C libraries to be called from methods in an application.
- Select the **Allow external MATLAB® functions** check box to call functions written in MATLAB (requires LiveLink™ *for* MATLAB®). If you change this preference setting, click **Clear Functions** in the **Settings** window for a **MATLAB** function node before running a simulation that calls MATLAB functions.
- Select the **Allow running application methods** check box to allow running applications that include methods. If you clear this check box, it is not possible to run methods in applications.
- Select **Allow running applications** to allow running applications in general. If you clear this check box, it is not possible to run any applications.

By default, all check boxes above except the **Allow external processes**, **Allow external libraries**, and **Allow external MATLAB® functions** check boxes are selected.

Under **Methods and Java libraries**:

- The **Enforce security restrictions** check box is selected by default. If selected, this check box enforces the following restrictions on methods and Java libraries:
  - Select the **Allow access to system properties** check box to read and write values to system properties such as `System.getProperty("cs.np")`, which can be used to determine the number of cores that COMSOL Multiphysics currently uses.
  - Select the **Allow changes to the runtime system** check box to allow methods and Java libraries to change the runtime system — for instance, by modifying class loaders.
  - From the **File system access** list, select **Temporary and application files** (the default) to restrict methods and Java libraries to only have access to such files, or select **All files** to allow methods and Java libraries to access all files that you have permissions to access on the file system.
  - Select the **Allow access to network sockets** check box to allow methods and Java libraries to open sockets for network access.
  - Select the **Allow control of the network authentication method** check box to allow methods and Java libraries to control the network authentication method used.
  - Select the **Allow access to classes through reflection** check box to allow access to all members in a class through reflection.
  - Select the **Allow access to runtime security settings** check box to allow methods and Java libraries to access security settings.

All check boxes above are cleared by default, enforcing those security restrictions.

COMSOL and the Java Heap Space

The COMSOL executable programs are Java applications, which are only allowed to use a limited amount of memory. This limit, the *Java heap space*, is specified during application startup. By default, COMSOL allocates 2 GB of Java heap space memory, which should be sufficient for almost all cases. If you, for a large and complex COMSOL model, get a Java out-of-memory error, you can increase the size of the Java heap by specifying the Java virtual machine (JVM) parameters `-Xmx`. You find that parameter in the configuration settings (`*`.ini) files for all COMSOL programs, in the platform directory for your COMSOL Installation. For example, for the COMSOL Multiphysics main desktop program:

```
C:\Program Files\COMSOL\COMSOL55\Multiphysics\bin\win64\comsol.ini
```

In that file, change the line

```
-Xmx2g
```

to

```
-Xmx3g
```

to increase the Java heap space from 2 GB to 3 GB, for example.

COMSOL Multiphysics Client-Server Architecture

Standalone COMSOL

The most straightforward way of running COMSOL Multiphysics is as a standalone application:

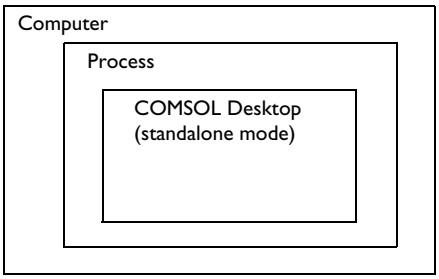

Running COMSOL Multiphysics in Client-Server Mode

The COMSOL Multiphysics client and server applications are available on all platforms.

RUNNING COMSOL MULTIPHYSICS IN CLIENT-SERVER MODE ON THE SAME COMPUTER

The COMSOL Multiphysics client and the COMSOL Multiphysics server can run on the same computer and with all available license types: named single-user license (NSL), CPU locked license (CPU), and floating network license (FNL).

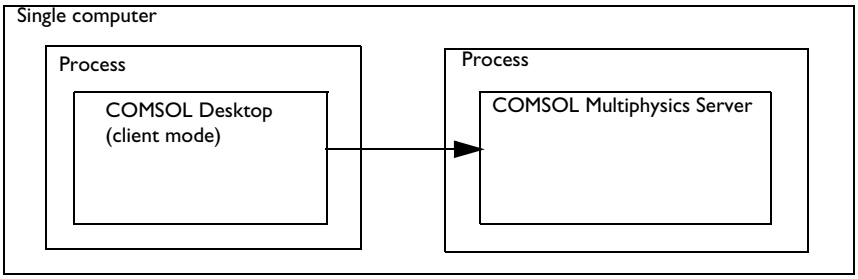

RUNNING COMSOL MULTIPHYSICS IN CLIENT-SERVER MODE ON DIFFERENT COMPUTERS

The COMSOL Multiphysics client and COMSOL Multiphysics server can also run on different computers, but this configuration requires a floating network license (FNL).

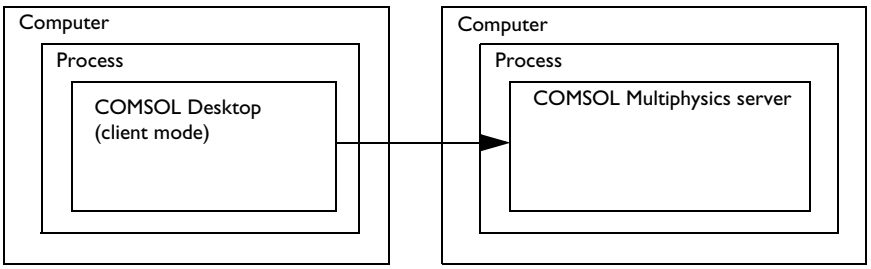

Running COMSOL with MATLAB or Excel

COMSOL can run together with MATLAB or Excel on the same machine using the client-server architecture. The command `comsol mphserver matlab` launches this configuration. The command `comsol matlab` can be used

to launch just the client and to connect to a remote server. Excel launches a COMSOL Multiphysics server when you open a model. See the documentation for LiveLink™ *for* MATLAB® and LiveLink™ *for* Excel® for more information.

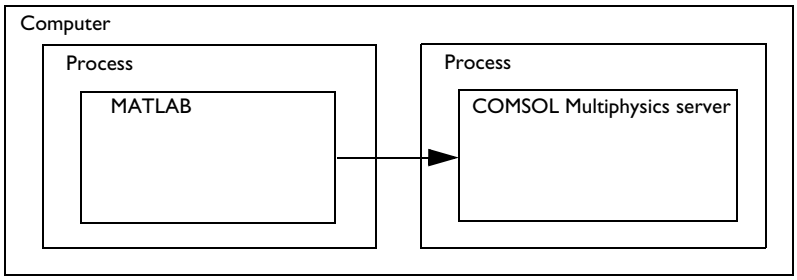

Running COMSOL Multiphysics in Client-Server Mode

The COMSOL Desktop can run in a separate process as a client to a COMSOL Multiphysics server. The COMSOL Desktop client uses a TCP/IP connection to connect to the COMSOL Multiphysics server. The client and server need not run on the same platform. You must have a floating network license (FNL) to run the COMSOL Multiphysics server and the COMSOL Multiphysics client on separate computers.

When you use LiveLink™ *for* MATLAB® and LiveLink™ *for* Excel®, a COMSOL Multiphysics client runs within MATLAB and Excel and connects to a COMSOL Multiphysics server, which is typically started automatically.

Advantages of Using COMSOL Multiphysics in Client-Server Mode

SOLVING LARGER MODELS

The COMSOL Multiphysics client-server configuration frees your desktop computer from lengthy computations, dispatching your jobs to a dedicated computer. Typically, the computer that runs the COMSOL Multiphysics server has more memory and a faster CPU than the desktop computer. Almost all data for the model is stored on the server. The only bigger chunks of data that the client maintains are the rendering data and table contents, which are produced on the server and sent to the client. Files are read and written on the client but streamed to and from the server.

	Running the COMSOL Multiphysics server and COMSOL Multiphysics client separately on the same computer increases the total memory available to solve problems. The COMSOL Multiphysics server components do not use the memory required for the graphical user interface, freeing that memory for the actual computations on the server.

CROSS-PLATFORM CONNECTIONS

The client and server need not run on the same platform. For example, you can run the COMSOL Desktop on Windows® as a client, connecting to a COMSOL Multiphysics server on a Linux or macOS server. In this way, you can interactively access a more powerful remote computer.

MULTIPLE CONNECTIONS

Only one graphical user interface can be connected to a COMSOL Multiphysics server at a given time. However, additional clients can be connected to the same server from LiveLink™ *for* MATLAB®and LiveLink™ *for* Excel® and also standalone clients using the COMSOL API. For example, the COMSOL Desktop can act as a COMSOL Multiphysics client when connected to a COMSOL Multiphysics server, and a MATLAB session can be connected to the same server using LiveLink™ *for* MATLAB®.

Running COMSOL Multiphysics in Client-Server Mode

STARTING A COMSOL MULTIPHYSICS SERVER

- When you have access to the Windows® desktop, start the COMSOL Multiphysics server from the **Start** menu. Go to **All Programs**, select **COMSOL 5.4** and then **Client-Server**, and select **COMSOL Multiphysics 5.4 Server**. If starting the COMSOL Multiphysics server from a terminal window in Windows, use the command `<COMSOL Multiphysics installation directory>\bin\win64\comsolmphserver.exe`.

- On Linux®, use the `comsol mphserver` command to start a COMSOL Multiphysics server.
- On macOS, use the **COMSOL Multiphysics Server** application, or if you connect to macOS from another computer, use the `comsol mphserver` command in the terminal window.

INITIALIZING THE COMSOL MULTIPHYSICS SERVER

The first time you start a COMSOL Multiphysics server on a computer, you are asked for a username and password. By default, your username and a hashed password is stored on your computer's hard drive. You can avoid storing your username and password on disk by providing the `-passwd nostore` target option to the COMSOL Multiphysics server command. When the COMSOL Multiphysics server is started, the server displays the port number. The server also displays a message each time you log in from a client.

Connecting, Disconnecting, and Reconnecting to and from the Desktop

CONNECTING TO A COMSOL MULTIPHYSICS SERVER

To connect to a COMSOL Multiphysics server from the COMSOL Desktop, select **File>COMSOL Multiphysics Server>Connect to Server** ( ). For Windows users, you can also customize the Quick Access Toolbar and then click the **Connect to Server** button.

Then in the **Connect to Server** dialog box, specify the hostname of the server in the **Server** field. The **Port** list setting specifies the TCP/IP port number of the server. Select **Default** to use the default port number, or select **Manual** to specify the port number in the field below. Then enter your user credentials under **User**.

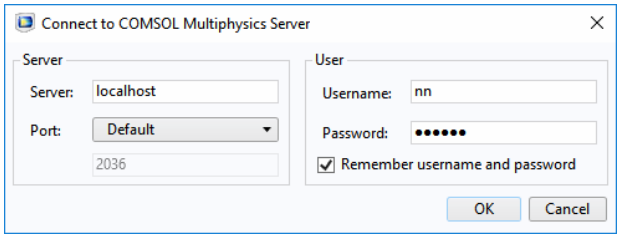

The port number is displayed by the server as you start it. The port number can change, for example, if you have several COMSOL Multiphysics servers running at the same time on the same computer. Each server is assigned a separate port number. The username and password are the ones you used when you started the server the first time.

When you connect to a server, you may be asked if you want to save your current model. We recommend that you respond *yes* to get the most current version of your model transferred to the server. If you answer *no*, the latest saved copy of your model is transferred to the server.

When you connect to a server, your model is transferred to the server by default. If there is already a model in the server, you may be asked if you want to work with your current model in the desktop or the model on the server.

Windows Toolbars and Menus

DISCONNECTING FROM A COMSOL MULTIPHYSICS SERVER

To close the connection to the server or MATLAB, select **File>COMSOL Multiphysics Server>Disconnect from Server** ( ). For Windows users, you can also customize the Quick Access Toolbar and then click the **Disconnect from Server** button.

Disconnecting from the server transfers the current model from the server to the COMSOL Desktop, which no longer runs as a client. By default, the option `-multi` is set to `auto`, which provides an option to choose if you want the server to keep running (if you use another client than the COMSOL Desktop, the server exits by default). It

can also be set to `-multi off` to always exit. Start the server with the option `-multi on` to keep it running after the disconnect. When you have used the option `-multi on`, or if you use the default option and choose to keep the server running, your model is kept in memory in the server, and you can attach to the model from another client later on. If you close the COMSOL Desktop when connected to a server, the client-server session is automatically disconnected, and the server continues to run with the model in memory if you have specified `-multi on`.

RECONNECTING TO A COMSOL MULTIPHYSICS SERVER

If you lose the connection between the COMSOL Desktop and a COMSOL Multiphysics server, the COMSOL Multiphysics software makes five attempts to reconnect to the COMSOL Multiphysics server. The following window appears:

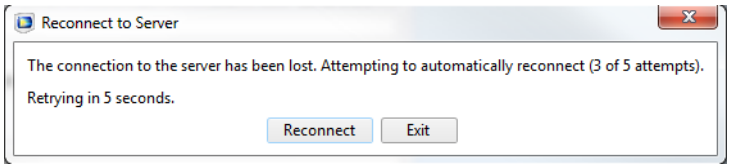

After five failed attempts, you get a possibility to manually attempt to reconnect to the server. If the connection remains lost, check the network and cables and the computer where the COMSOL Multiphysics servers is installed.

PREFERENCES FOR EXITING AND DISCONNECTING

In the **Preferences** dialog box, the following settings are available on the **Client Server** page to control how the software handles the COMSOL Multiphysics Server when exiting a COMSOL Multiphysics client and when disconnecting from a server:

- From the **When exiting the COMSOL Multiphysics client** list, choose **Ask** (the default) to get a question if you want to shut down the COMSOL Multiphysics Server when you exit the COMSOL Multiphysics client, choose **Leave server running** to exit the client but keep the COMSOL Multiphysics Server running, or choose **Shut down server** to shut down the COMSOL Multiphysics Server.
- From the **When disconnecting from a server** list, choose **Ask** (the default) to get a question if you want to shut down the COMSOL Multiphysics Server when you disconnect from it, choose **Leave server running** to disconnect but keep the COMSOL Multiphysics Server running, or choose **Shut down server** to shut down the COMSOL Multiphysics Server when disconnecting.

WORKING WITH MATLAB, EXCEL, OR THE COMSOL API

From MATLAB, you can use the commands `Modelutil.connect` and `Modelutil.disconnect` to connect and disconnect from a COMSOL Multiphysics server, respectively. The connection to the server is necessary to access and manipulate a model.

From MATLAB (and the COMSOL API), you can create multiple models using the `ModelUtil.create` and `ModelUtil.model` commands.

Import Application from Server

If several applications are present on the server, to get access to a particular application, select **File>COMSOL Multiphysics Server>Import Application from Server** ( ). For Windows users, you can also customize the Quick Access Toolbar and then click the **Import Application from Server** button.

Remove Applications from Server

To delete applications (remove them from the server) that you have created using `ModelUtil`, select **File>COMSOL Multiphysics Server>Remove Applications from Server** ( ). For Windows users, you can also customize the Quick Access Toolbar and then click the **Remove Applications from Server** button.

	Windows Toolbars and Menus

Shared Libraries

When running in a Java application, and from MATLAB, the COMSOL Multiphysics client uses Java only and does not load shared libraries. When the COMSOL Desktop operates as a COMSOL Multiphysics client, it loads several shared libraries.

Running COMSOL in Parallel

COMSOL supports two mutual modes of parallel operation:

- The distributed memory model runs on several nodes on a Linux® or Windows® cluster; see Distributed-Memory Parallel COMSOL.
- A parallel shared memory model. See Shared-Memory Parallel COMSOL

Overview of Simulations on Shared- and Distributed-Memory Computers

The following terms occur frequently when describing the hardware for cluster computing and shared memory parallel computing:

A *cluster* is defined as any networked system of computers. A single cluster is composed of a set of computing *hosts*, often interchangeably called *physical nodes*, which are networked together via *interconnects*. When instances of a software program such as COMSOL Multiphysics running on a cluster need to communicate with each other, they do so via MPI, the message-passing interface. Each computing hosts will have one or more CPUs and each CPU has multiple *cores*. All of the CPUs on a single hosts (and all of the cores within these CPUs) can share the same memory space, so each host is a *shared-memory* computer. The physical processor cores are used in shared-memory parallelism by a computational node running on a host with a multicore processor. For example, a host with two quad-core processors has eight available cores.

The entire cluster, on the other hand, is a *distributed-memory* computer. In this case, the *compute nodes* are where the distributed computing occurs. A COMSOL Multiphysics instance resides in each compute node and communicates with other compute nodes using MPI (message-passing interface). A compute node is a process running on the operating system, and multiple compute nodes can be assigned to run on a single host.

When a single COMSOL Multiphysics model is solved on a single host, there is no information being passed over the interconnects, and MPI does not need to be used. This is desirable because the data transfer speed between hosts via the interconnects is slower than the data transfer within a single host. When a single model requires so much memory that it cannot be solved on a single host, then multiple hosts have to be allocated to the model, and the MPI is used to share date between processes running on different hosts. The interconnect speed can become a significant computational bottleneck. It is therefore typically desirable to minimize the number of hosts used per single model. At least one compute node must run on each host. Depending on the specific hardware and the COMSOL Multiphysics model being solved, it may be beneficial to assign two or more computational nodes per host.

When a single COMSOL Multiphysics model contains a parametric sweep, it is possible to solve each case of that sweep completely separately of each other. In this scenario, using the Distributed Parametric Sweep functionality is highly motivated since there will be relatively little data passed via MPI; only the problem definition and the solution. Since each host can contain several CPUs, each of which can have many cores, it is also possible to solve several cases of a parametric sweep on the same host. This is motivated if the individual cases have low computational requirements.

The following command-line options are relevant for controlling how a problem is divided over a cluster:

- `-mpihosts`: This option specifies the names of the hosts that will be used during the solution.
- `-f`: This option specifies the path to the hostfile that will be used during the solution.
- `-nn`: This option specifies the number of instances of COMSOL Multiphysics that are created. The instances communicate to each other via MPI.

- `-nnhost`: The numbers of instances of COMSOL Multiphysics that are allocated to run on each host.
- `-np`: The number of cores used for each instance of COMSOL Multiphysics.

	• The COMSOL Commands • Distributed-Memory Parallel COMSOL • *Running COMSOL® in parallel on clusters*. Knowledge base article with more information and example scripts: https://www.comsol.com/support/knowledgebase/1001/.

	The *Introduction to COMSOL Multiphysics* includes a tutorial to learn how to build the busbar geometry. See the PDF-file included with COMSOL Multiphysics.

Shared-Memory Parallel COMSOL

Modern computer hardware supports the shared memory model, which allows data in memory to be accessed by all of the CPU cores. When running on a cluster, COMSOL Multiphysics uses shared-memory parallelism on each node; and distributed parallelism across the cluster nodes. The solvers, assembly, and meshing in COMSOL Multiphysics benefit from shared-memory parallelism. By default, the COMSOL software uses all cores available on the machine for shared-memory parallelism.

BENEFITS OF RUNNING COMSOL IN SHARED-MEMORY PARALLEL MODE

All iterative solvers and smoothers except Incomplete LU are parallelized. Some smoothers have blocked versions. The blocked versions usually benefit more from running in parallel than the nonblocked versions. The finite element assembly also runs in parallel. Usually the speedup depends on the problem size; problems using a lot of memory usually have better speedup.

The PARDISO and SPOOLES sparse direct linear solvers and the MUMPS direct solver all run in parallel.

The orthonormal null-space function runs in parallel.

The free mesher in 3D runs in parallel over the faces and domains of the geometry object being meshed. For this reason, the speedup when running on several processors depends strongly on the domain partitioning of the corresponding geometry. Meshing a geometry with only one domain, such as an imported CAD part, gives almost no speedup at all. However, meshing a geometry with several domains, such as an imported CAD assembly with many parts, can give significant speedup, especially if the number of elements in the mesh is large.

The evaluation part of all plot types runs in parallel. In addition, the computations of contours, isosurfaces, and streamlines run in parallel.

A significant part of the parallel speedup in computations comes from functions of the BLAS type (basic linear algebra subprogram; see the next section). If you want to run the software in parallel, it is important that the BLAS library you use supports parallelism. The BLAS libraries shipped with COMSOL Multiphysics do that.

Running in parallel usually requires extra memory. If you run out of memory, try to lower the number of used cores as explained in the *COMSOL Multiphysics Installation Guide*. The speedup depends on the processor load. For instance, if your system has m processors and n of them are used by other active programs, do not set the number of cores to a number that is greater than $m - n$. The reason is that the programs compete for the same resources, which slows all of them considerably.

COMSOL and BLAS

BLAS is a set of functions for basic linear algebra operations. Vendors often supply BLAS libraries optimized for their hardware. A large portion of the computational engine in COMSOL Multiphysics relies on BLAS. Included with COMSOL Multiphysics is the Intel® MKL (Intel® Math Kernel Library) BLAS library, which is the default BLAS library. COMSOL Multiphysics also includes the standard BLAS and LAPACK libraries. On Linux, the BLIS library is also included, which is faster than the standard BLAS. It is also possible to supply another BLAS library optimized for your hardware. See the *COMSOL Multiphysics Installation Guide* for information about how to override the default BLAS library (MKL). If the library you want to use is unavailable or incorrectly installed, COMSOL Multiphysics switches to the default BLAS library.

Distributed-Memory Parallel COMSOL

See also Overview of Simulations on Shared- and Distributed-Memory Computers.

The Linux® and Windows® versions of COMSOL Multiphysics support a distributed memory mode. The *distributed mode* starts a number of computational nodes set by the user. Each computational node is a separate process running a COMSOL instance. A computational node is not the same as a physical node (computer), but they can coincide. When running in distributed mode, COMSOL Multiphysics uses MPI for communicating between the processes in the distributed environment.

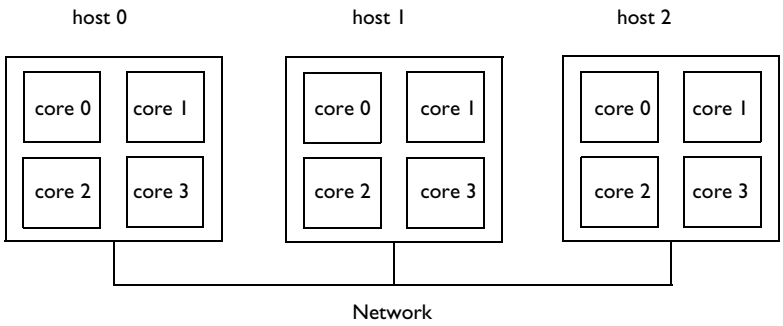

Figure 22-1: Schematic of a cluster with 3 hosts (physical nodes) with 4 processor cores each.

The distributed-memory mode can be combined with the ability of COMSOL Multiphysics to benefit from the shared-memory model. All modes that COMSOL Multiphysics can run in are able to use distributed-memory mode.

In client-server mode, the computer or cluster acting as server must be accessible from the client through a TCP/IP connection. If you cannot connect to the server, you can use a COMSOL Batch job to solve models on the cluster or do parametric sweeps. You can also use a Cluster Computing study to set up a COMSOL Batch job from within the COMSOL Desktop.

For the schematic in Figure 22-1, you can choose any number of computational nodes between 1 and 12. Each node, in turn, can use between 4 and 1 processor cores for shared memory. By default, COMSOL Multiphysics uses as many cores as are available on each physical node for shared-memory parallelism. This is suboptimal if the number of computational nodes is not the same as the number of physical nodes. It is recommended that you

explicitly set the number of cores. For the schematic example, if you run 6 computational nodes, the optimal value for number of cores per compute node is 2. The total number of cores used is then $6 \cdot 2 = 12$.

For the same example, assuming you are the sole user of the system for the duration of the computation and that your problem requires a lot of memory, use 3 computational nodes with 4 shared memory cores each.

You do not need a cluster to benefit from the ability to utilize the distributed-memory model. On a multiprocessor computer, you can use multiple computational nodes. This can be useful for small-sized parameter sweeps, for example. Make sure that the number of computational nodes times the number of cores does not exceed the number of available cores; otherwise performance deteriorates significantly.

Benefits of Running COMSOL in a Distributed Mode

The following direct solvers are supported by COMSOL Multiphysics when running in a distributed mode:

- MUMPS
- SPOOLES

PARDISO is not supported in distributed mode. The Intel MKL Parallel Direct Sparse Solver for Clusters is used instead if the **Parallel Direct Sparse Solver for Clusters** check box is selected; otherwise, MUMPS is used instead.

The following iterative solvers are supported:

- Iterative solvers: BiCGStab, CG, GMRES, and FGMRES
- Smoothers and preconditioners: SOR, SOR Gauge, SOR Line, SOR Vector, SCGS, and Vanka
- Geometric multigrid
- Algebraic multigrid
- Domain decomposition

All nonlinear or segregated stationary, time-dependent, parametric, eigenvalue, and optimization solvers run in parallel in the distributed mode. Assembling is also performed in parallel in the distributed mode. In addition, the orthonormal null-space function runs in parallel in the distributed mode. The primary benefit is that the memory usage per node is lower than when COMSOL Multiphysics is run in a nondistributed mode. Therefore, if you run COMSOL Multiphysics in the distributed mode on a cluster distributed over several computer nodes, you can solve a larger problem compared to when you run in a nondistributed mode.

COMSOL Multiphysics can also run parametric sweeps using the distributed mode. This setting is available for all parametric solvers when **Advanced Study Options** is active. The simplest way to start a distributed parametric sweep is to select the **Distribute parametric sweep** check box in the **Settings** window for **Cluster Computing** in the **Cluster Settings** section. The simplest way to modify an existing model is to add the **Cluster Computing** study and select **Compute** in the study node's **Settings** window. When running a parametric sweep in distributed mode, the memory usage is still limited by the memory size of a single computer node. Because the problems are solved in parallel, you will solve for all parameter values faster compared to solving on a single computer node.

If you want to combine the benefits from distributed parametric sweeps and the distributed solvers, it is possible to run in a hybrid mode where you can limit the maximum number of groups to distribute the sweep over. Use the **Show Default Solver** command to access this setting, which you find in the **Cluster Settings** section of the **Settings** window for the **Parametric** solver node.

Running COMSOL in Parallel on Clusters

You control the options for running COMSOL Multiphysics on a cluster from the **Study** node in the **Model Builder**. To enable the cluster computing feature, click the **Show More Options** button ( ) and select **Batch and Cluster** in the **Show More Options** dialog box. Then in the **Model Builder**, right-click a **Study** node and select **Cluster Computing**

( ). You must have a floating network license (FNL) to run COMSOL Multiphysics in distributed-memory parallel mode..

	Cluster Computing and Cluster License Handling. See also Cluster Installation in the *COMSOL Multiphysics Installation Guide* for information about cluster installations.

	The *Micromixer — Cluster Version* and *Joule Heating of a Microactuator — Distributed Parameter Version* models show how to set up a model for running COMSOL Multiphysics in parallel on a cluster: in one case for decreased per node memory usage of a large fluid flow model using distributed memory computing, and in the second case for speeding up solution of a distributed parameter sweep.

The following sections describe how to run cluster jobs on Windows and Linux.

RUNNING A CLUSTER JOB ON WINDOWS

This section outlines the main steps for running a cluster job on Windows®. Before you start, check that the installation of COMSOL Multiphysics follows these guidelines:

- Make sure that the COMSOL installation directory is shared between all the compute nodes and the head node on a shared network disk.
- Make sure that the license manager is available and up and running.
- If you work on a desktop PC, which is recommended, install the COMSOL software on that local PC. Also install Windows HPC Pack on the desktop PC before you start. Windows HPC Pack makes it possible to access the cluster from your workstations. It is free and ships with the Microsoft® HPC Server 2008, 2012, and 2016. The latest version can be downloaded from Microsoft. An alternative is to log in to the cluster via Remote Desktop, for example.

Running Cluster Jobs in the COMSOL Desktop

To run a cluster job using COMSOL Desktop, follow these steps:

1. Start COMSOL Multiphysics.
2. In a complete model, right-click the **Study** node and select **Cluster Computing** ( ).
3. In the **Settings** window for **Cluster Computing**, select **HPCS 2008/2012/2016** from the **Scheduler type** list. This provides access to all parameters that you need for communication with the cluster.
4. To submit the job, click **Compute** ( ).
5. You can define more details in the **Settings** window for the **Cluster Computing** node ( ).under **Job Configurations** ( ). When you submit a job, COMSOL Multiphysics adds a **Cluster Computing** node. If you want to change or inspect its settings before submitting the first job, right-click the **Study** node ( ) and select **Show Default Solver** ( ).
6. After submitting the job to the cluster, you can monitor the progress in the **Progress** window and the **Log** window. The **Progress** window shows the progress of the batch data and external processes, and the **Log** window contains a log with information about the solver operations for each parameter in a parametric sweep, for example. You can also get details about a cluster job in the Windows Job Manager, which is available in the HPC Pack.

Running Cluster Jobs from the Command Line

You can do the same cluster simulation from the command line using, for example, a scheduler script. The **Cluster Computing** node is not needed in this case.

This command launches a COMSOL MPI job on a cluster without involving the scheduler:

```
mpiexec -n 2 comsolclusterbatch.exe -inputfile comsoltest.mph -outfile output.mph -batchlog b.log
```

You can use the command `job submit` to launch COMSOL Multiphysics to the Windows scheduler.

For additional information about running COMSOL Multiphysics on clusters from the command line, see the section COMSOL Cluster Commands for Windows.

RUNNING A CLUSTER JOB ON LINUX

Before you begin, make sure that the license manager is up and running and reachable from all compute nodes and the head node.

Running Cluster Jobs in the COMSOL Desktop

To run a cluster job using COMSOL Desktop, use the steps below. Skip steps 1 and 3 if you are running COMSOL Multiphysics on the machine from where you want to start the cluster job.

1. Start the COMSOL Multiphysics server on the Linux® system with the command `comsol mphserver`. Notice the port number that is displayed (for example, *COMSOL 5.4 started listening on port 2036*).
2. Start COMSOL Multiphysics on your desktop computer.
3. From the **File** menu, choose **COMSOL Multiphysics Server>Connect to Server** ( ). In the **Connect to Server** dialog box, use the login credentials that you entered at the startup of the COMSOL Multiphysics server.
4. In a complete model, right-click the **Study** node and select **Cluster Computing** ( ).
5. In the **Settings** window for **Cluster Computing**, select **General** from the **Scheduler type** list for Linux clusters. This provides access to all parameters that you need for communication with the cluster.
6. To submit the job, click **Compute** ( ).
7. You can define more details in the **Settings** window for the **Cluster Computing** node ( ) under **Job Configurations** ( ). When you submit a job, COMSOL Multiphysics adds a **Cluster Computing** node. If you want to change or inspect its settings before submitting the first job, right-click the **Study** node ( ) and select **Show Default Solver** ( ).
8. After submitting the job to the cluster, you can monitor the progress in the **Progress** window and the **Log** window. The **Progress** window shows the progress of the batch data and external processes, and the **Log** window contains a log with information about the solver operations for each parameter in a parametric sweep, for example.

Running Cluster Jobs from the Command Line

You can do the same cluster simulation from the command line using, for example, a scheduler script. The **Cluster Computing** node is not needed in this case.

This command launches a COMSOL MPI job on a cluster without involving the scheduler:

```
comsol -nn 2 batch -inputfile comsoltest.mph -outfile output.mph -batchlog b.log
```

For additional information about running COMSOL Multiphysics on clusters from the command line, see the section COMSOL Cluster Commands for Linux.

RUNNING CLUSTER SWEEPS

A **Cluster Sweep** node that you add to a study can be viewed as combinations of a **Parametric Sweep** node with a **Cluster Computing** subnode under **Job Configurations**. Each parameter tuple results in a start of a **Cluster Computing** job. Therefore, most settings can be derived from these two. The main additions are the following options in the **Batch Settings** section:

- Under **Before sweep**: the **Clear meshes** and **Clear solutions** check boxes that specify what to do before saving the model.

- Under **During sweep**: The **Synchronize solutions** and **Synchronize accumulated probe table** check boxes that specify what data to insert back into the original model.
- Under **After sweep**: The **Output model to file** check box that controls if the batch jobs save a model file or not.

CLUSTER LICENSE HANDLING

To run COMSOL Multiphysics simulations in distributed-memory parallel mode (on a cluster), you must have a floating network license (FNL). Look for the keyword CLUSTERNODE in your license file. When running a cluster job, COMSOL Multiphysics uses the following license components and license check-out procedures:

- On the head node, one seat of the COMSOL and COMSOLGUI features each are checked out.
- On each of the compute nodes, only one CLUSTERNODE feature is checked out, and it is not counted. This means that you have an unlimited number of cluster nodes available for every seat (job) of the floating network license.
- When running a batch job through a scheduler, the COMSOL license manager checks out the noncluster COMSOL license keys (COMSOL, COMSOLGUI, CADIMPORT, CHEM, and so on) from one of the distributed processes. All other processes in the batch job only check out a CLUSTERNODE license key. So, license keys can be checked out from any physical node in the cluster depending on where the scheduler starts the processes.

STOPPING AND OUTPUTTING THE SOLUTION RUNNING A CLUSTER JOB OR BATCH JOB

If you have a model running on a cluster in batch mode, for example, you can monitor the solver log. If you notice that the solver starts diverging, you may want to stop the solution process and output the available solutions. To do so, use one of the following commands, for example:

```
echo "Cancel" > outputfile.mph.status
```

to cancel the solution, or

```
echo "Stop 2" > outputfile.mph.status
```

to stop the solution on progress level 2, or

```
echo "Stop"
```

to stop immediately.

In those commands, replace `outputfile` with `inputfile` if a separate output file is not specified.

SPECIFYING THE SOLUTION STORAGE FORMAT

The COMSOL Multiphysics software supports two different solution storage formats on clusters. With the first format the entire solution is stored on all nodes. With the second format only a single node stores the entire solution. The savings in disk space when using a single node can be significant for time-dependent problems, eigenvalue problems, and for solutions using a parametric solver. To select the first format, go to the **Solution** node under **Solver Configurations** and choose **Solution>Store on All Nodes**. To select the second format, choose **Solution>Store on a Single Node**.

Grid Computing and Remote Computing in COMSOL Multiphysics

The Cluster Sweep and Cluster Computing studies can be configured to start COMSOL simulations on other machines. This is useful if you want to perform a parametric study and you have multiple machines that are free (often referred to as *grid computing*) or that you have a cluster with a job scheduler to which you want to submit COMSOL Multiphysics simulations. The COMSOL Multiphysics software supports a number of common configurations. The main requirement is that you can start COMSOL Multiphysics on the machines you run

simulations on and that one of the supported methods can be used to access the machines. Some example configurations are:

- You have COMSOL Multiphysics installed on your desktop computer and want to run on a cluster where COMSOL Multiphysics is installed.
- You have COMSOL Multiphysics installed on your desktop computer and want to start simulations on other computers that you have login access to — for instance, using the secure shell protocol (SSH).
- You have access to a remote computer through a client-server connection and want to start simulations on computers that you can login to from the remote computer.
- You have a job scheduler that can schedule jobs to remote computers.

In the first case, you can configure the **Remote and Cloud Access** section of the Cluster Computing or Cluster Sweep studies to log in to the cluster's job submit node and use the **Batch Settings** section to configure the scheduler. If the login to the cluster can be done using a locally installed SSH client, you can use an SSH key file pair to login. You can also configure your own login command. Use secure copy (SCP, based on secure shell) or configure a command to copy the files from the local directory to the remote directory. The hostname of the cluster login node should be set in the Remote hosts section. In the **Batch Settings** section, it is important to distinguish between settings for the local machine and settings for the remote machine. The **Directory** settings apply to the local machine while the **Specify external COMSOL batch directory path** refers to the remote machine. The paths have to be accessible for the respective computers. The **Specify external COMSOL installation directory path** can be used to start COMSOL Multiphysics when the installation path on the remote machine is different than on the local machine. Use the **Scheduler type** setting to select the job scheduler to use.

In the second case above, you can configure the **Remote and Cloud Access** section of the Cluster Computing or Cluster Sweep studies to log in to other computers and use the **Batch Settings** section to configure the start command used on the other computers. If the login to the cluster can be done using a locally installed SSH client, you can use an SSH key file pair to log in. You can also configure your own login command. Use SCP or configure a command to copy the files from the local directory to the remote directory. The hostnames of the remote computers should be set in the **Remote hosts** list in the **Remote and Cloud Access** section. In the **Batch Settings**, it is important to distinguish between settings for the local machine and settings for the remote machine. The **Directory** settings apply to the local machine while the **Specify external COMSOL batch directory path** refers to the remote machine. The paths have to be accessible for the respective computers. The **Specify external COMSOL installation directory path** can be used to start COMSOL Multiphysics when the installation path on the remote machines is different than on the local machine.

In the third case, you can use similar settings as in the second case. The only difference is that you should set the **Specify server directory path** if you want the data stored in a special place on the server side.

In the fourth and last case above, you only need to use the **Batch Settings** section of the Cluster Computing or Cluster Sweep study. In this case it is important that the **Directory** setting and the **Specify external COMSOL batch directory path** refer to the same physical path. The paths are usually different because you have set a hard drive path in the **Directory** setting and a network path in the **Specify external COMSOL batch directory** path. Use the **Scheduler type** setting to select the job scheduler to use.

The COMSOL Commands

The following sections describe the `comsol` commands on the Windows®, Linux®, and Macintosh platforms:

- COMSOL Commands on Windows. For COMSOL Compiler™, see The COMSOL Compile Command.
- COMSOL Commands on Linux. For COMSOL Compiler™, see The COMSOL Compile Command.
- COMSOL Commands on macOS. For COMSOL Compiler™, seeThe COMSOL Compile Command.

COMSOL Commands on Windows

Use a COMSOL command to start COMSOL products with detailed start-up options.

The general syntax of the COMSOL commands is

```
<command> [<target>] [<options>] [<target arguments>]
```

where square brackets indicate optional arguments. There are several different commands (See `<command>` in the command syntax) that can be combined with optional targets to achieve various results. The table below lists the major available commands and targets (if the Availability column is empty, the command is always available):

TABLE 22-1: COMSOL COMMANDS AND TARGETS

COMMAND AND TARGET	DESCRIPTION	AVAILABILITY
`comsol`	Run standalone COMSOL Desktop	
`comsolbatch`	Run a COMSOL MPH-file or class file in batch mode	
`comsolcluster`	Run COMSOL Desktop on a cluster	Requires a floating network license (FNL)
`comsolclusterbatch`	Run COMSOL cluster version in batch mode	Requires a floating network license (FNL)
`comsolclustermphserver`	Run COMSOL Multiphysics cluster server	Requires a floating network license (FNL)
`comsolclusterxpl`	Run cross-platform COMSOL Desktop on a cluster	Requires a floating network license (FNL)
`comsolcompile`	Compile a model file for Java or compile an application into an executable application (the latter option requires COMSOL Compiler)	
`comsoldoc`	Launch the COMSOL Documentation window	
`comsolmphclient`	Run COMSOL Multiphysics Client	
`comsolmphserver`	Start COMSOL Multiphysics Server	
`comsolmphserver matlab`	Start MATLAB® and connect to a COMSOL Multiphysics server	Requires a LiveLink™ *for* MATLAB® license
`comsolpowerpointbatch`	Update images in PowerPoint presentations	
`comsolxpl`	Run cross-platform COMSOL Desktop	

The commands are available in the `bin\win64` subdirectory in the COMSOL installation directory. The COMSOL installer sets up a few of the possible commands on your Start menu and your desktop. In Windows 8, 8.1, and 10, you can click the shortcut **COMSOL Launchers** on the Apps screen. This makes a folder with shortcuts to all COMSOL commands available.

To create additional customized commands, you can create shortcuts including all argument and put them on your desktop. You can also issue COMSOL commands in a command window. To conveniently access the command in a command window, you need to set up the Windows path to include the path `bin\win64` in the COMSOL installation directory.

INI FILES

For each launcher file, there is a corresponding `.ini` file in the same directory. It is sometimes recommended that these files are edited. For example, you can add options to any of the above commands by modifying the corresponding INI file. To change the option `opt` to value *`val`*, add the line

```
-Dopt = val
```

to the file `comsol.ini`. Change the file `comsolbatch.ini` for `comsolbatch`, and similarly for the other COMSOL targets.

In general, for a system property or option, you add `-D` as a command option. For example, to set the system property `cs.precmp` to *`val`*, use the command option `-Dcs.precmd = val`.

OPTIONS

You can enter various options after the COMSOL command and target. Table 22-2 lists the options (See [*<options>*] in the command syntax) available for all COMSOL commands. Always issue these options between the command and the target (if any).

TABLE 22-2: COMSOL OPTIONS (CURLY BRACKETS INDICATE DEFAULT VALUES)

COMSOL OPTION	DESCRIPTION
<target> `-h`	Print target-specific help.
`-3drend ogl | dx9 | sw`	3D renderer: OpenGL, DirectX, or software rendering.
`-alloc native | scalable`	Memory allocator: Select from using the Windows® native memory allocator or the scalable memory allocator from the Intel® Threading Building Blocks library. COMSOL defaults to the scalable allocator for computers with more than 8 cores.[3]
`-applicationsroot` *<path>*	Specify custom path to the COMSOL Application Libraries root directory.[1]
`-autosave {on} | off`	Control saving of recovery files.
`-blas {auto} | mkl | blas | path`	BLAS library to use.[4]
`-blaspath` *<path>*	BLAS library path.[4]
`-c` *<path>*	License file path.
`-ckl`	Use class-kit license.
`-clusterstorage all | single | shared`	Cluster storage format. The `single` format does I/O only from the root node, while the `shared` format does I/O using distributed I/O operations. The shared format requires that all nodes have access to the same storage area and the same temporary storage area.
`-comsolinifile` *<path>*	Specify custom path to .ini-file used when starting COMSOL.
`-configuration` *<path>*	Path to directory for storing the state for the GUI between sessions and for performing different caching tasks. The configuration directory is by default a subdirectory to the preference directory. When running in batch or cluster mode, add `@process.id` to get a unique identifier to the path (for example, `-configuration /tmp/comsol_@process.id`).

TABLE 22-2: COMSOL OPTIONS (CURLY BRACKETS INDICATE DEFAULT VALUES)

COMSOL OPTION	DESCRIPTION
`-data`	Path to a workspace directory for storing internal workspace information. The workspace directory is by default a subdirectory to the preference directory. *The workspace directory is cleared when COMSOL is launched.* When running in batch or cluster mode, add `@process.id` to get a unique identifier to the path (for example, `-data /tmp/comsol_@process.id`).
`-docroot <path>`	Specify custom path to the COMSOL documentation root directory.[1]
`-h`	Print general help.
`-keeplicenses on | {off}`	Keep checked out licenses when creating or opening an application.
`-migrateprefs {auto} | on | off`	Migrate preferences from previous version.[2]
`-mpmode throughput | turnaround | owner`	Multiprocessor mode.[3]
`-np <no. of cores>`	Number of cores.[3]
`-numafirst <numa number>`	Set first NUMA node to bind process to.[3]
`-numasets <no. of sets>`	Number of NUMA sets.[3] `-numasets 1` represents the case where there is only one nonuniform memory access node — that is, the entire computer.
`-prefsdir <path>`	Preference directory.
`-recoverydir <path>`	Path to recovery directory. The recovery directory is by default a subdirectory to the preference directory.
`-tmpdir <path>`	Temporary file directory.
`-v, -version`	Print COMSOL version.
REFERENCE	

[1] See Documentation and Application Libraries Root Directories.
[2] See Preference Migration
[3] See Shared-Memory Options.
[4] See BLAS Options.

For the `-tmpdir` option, the COMSOL Multiphysics software uses the specified directory to store temporary files. As an alternative, you can use the `COMSOL_TMPDIR` environment variable. Use the `-prefsdir` option to specify the directory where COMSOL Multiphysics stores the preference file.

Remote Desktop and Graphics Rendering

For a Floating Network License, you can access COMSOL Multiphysics with a Windows Remote Desktop connection. This way of accessing COMSOL Multiphysics is only supported with the software rendering graphics option.

Documentation and Application Libraries Root Directories

In a default COMSOL installation, the documentation files are located in the directory `doc` under the installation root directory. You can use the `-docroot` option if you want to move the documentation directory to a different location. Similarly, use the `-applicationsroot` option if you want to move the Application Libraries root directory `applications` from its default location under the COMSOL installation root. Relocating the documentation and Application Libraries root directories can be useful for administering an Application Library update; see The Application Library Update Window.

Setting the paths to the documentation and Application Libraries root directories using these options does not in itself move the directories and their contents.

Preference Migration

By default, most preference settings are migrated from a previous COMSOL Multiphysics version when you start an instance of a new COMSOL Multiphysics version. To change this behavior, start COMSOL Multiphysics using

```
comsol.exe -migrateprefs on
```

to force a migration of preferences from the previous version and then overwrite the current preferences, or

```
comsol.exe -migrateprefs off
```

to not migrate any preferences.

Using the automatic preference migration, preferences are only migrated from the most recent previous version, they are only migrated on first launch, and the preference migration is only done once.

Some preferences for settings such as the root directories for documentation and application libraries are not migrated.

It is also possible to import and export preference settings using the **Preferences** dialog box in the COMSOL Desktop.

Shared-Memory Options

Use the option `-np` to control the number of cores used. The default is to use all available cores (processing units).

Use the option `-numasets` to control the number of nonuniform memory access (NUMA) node sets that the COMSOL Multiphysics software should take into account. This is usually the number of processor sockets that the hardware is using. Note that `-numasets 1` represents the case where there is only one nonuniform memory access node — that is, the entire computer. If you only set the `-np` option, the number of sockets is determined automatically so that sufficient number of sockets are used by default. The `-np` flag, together with the `-numasets` flag, decides the size of a NUMA set (that is, `-np` divided by `-numasets`). The purpose of `-numafirst` is to decide which processor core number to place the first NUMA set on (that is, the size of the NUMA set times `numafirst`).

Depending on how loaded the machine is, you can control how COMSOL Multiphysics uses the available processors with the `-mpmode` option. The following options are available:

TABLE 22-3: COMSOL MULTIPROCESSOR MODE OPTIONS

MPMODE OPTION	DESCRIPTION
`owner`	Provides the highest performance in most cases.
`throughput`	Is expected to give the best performance when several different processes are running actively at the same time as COMSOL Multiphysics.
`turnaround`	Typically provides the best performance when no other processes than COMSOL Multiphysics are active.

Use the option `-alloc` to specify memory allocator type. The default is to use the native memory allocator for computers with less than eight cores and otherwise the scalable memory allocator. The scalable memory allocator can increase performance significantly for computers with many cores but uses more memory.

You can also specify the number of cores and sockets and the use of the scalable allocators as preferences on the **Multicore and Cluster Computing** page in the **Preferences** dialog box. To specify those numbers manually, select the **Number of cores** and **Number of sockets** check boxes to enter a number in the associated text fields. By default, all cores are used and the number of sockets are set automatically. If you lower the number of cores, it is good practice to also lower the number of sockets. The preference option for the scalable allocator is called **Optimized for multicore**. If you want to choose another memory allocator than the default setting, select the Memory allocator check box and the choose **Native** or **Optimized for multicore**.

BLAS Options

BLAS is a set of functions for basic linear algebra operations. A large portion of the computational engine in the COMSOL software relies on BLAS. The COMSOL software provides for the following BLAS-related options:

TABLE 22-4: COMSOL BLAS OPTIONS

BLAS OPTION	DESCRIPTION
auto	The default option is to use the Intel MKL library.
mkl	Use the Intel MKL library (included with installation).
blas	Use the standard BLAS library (included with installation).
path	Use a BLAS library specified using the option `-blaspath` or the environment variable `COMSOL_BLAS_PATH`.

Both MKL and BLAS are distributed with COMSOL Multiphysics.

If you want to use a different BLAS library than the ones provided by COMSOL, make sure that COMSOL Multiphysics can find the library. The simplest way for COMSOL Multiphysics to find a library is to put it in `/lib/win64` or somewhere in the standard search path. Also provide the path to any sublibraries needed by the library. Set the search path to point to the directory where the library is installed. To do so, use the environment variable `PATH`. Your library must support both the standard FORTRAN LAPACK interface and the standard FORTRAN BLAS interface. If your LAPACK and BLAS interface consists of several libraries, use the path to the LAPACK library.

Application Options

The following options are used to specify inputs to an application with command-line options.Find more information about these options in the section *The Application Argument Node* in the *Application Builder Reference Manual*.

TABLE 22-5: COMSOL TARGET COMMAND-LINE ARGUMENTS

COMSOL APPLICATIONS OPTIONS	DESCRIPTION
`-appargnames` *`<names>`*	Comma-separated list of argument names.
`-appargvalues` *`<values>`*	Comma-separated list of argument values.
`-appargsfile` *`<filename>`*	A file with arguments to the application. Each line in the file should have the format `<name>=<value>`.
`-appargvarlist` *`<names>`*	Comma-separated list of argument names whose values are on file.
`-appargfilelist` *`<filenames>`*	Comma-separated list of file names. Each file contains the value for one argument.

COMSOL COMMANDS FOR APPLICATIONS

In additions to the options in Table 22-2, the standalone COMSOL command supports the following options on Windows:

TABLE 22-6: COMSOL COMMAND-LINE ARGUMENTS

COMSOL OPTIONS	DESCRIPTION
`-edit` *`<file>`*	Edit application.
`-open` *`<file>`*	Open application.
`-run` *`<file>`*	Run application.

For example, use `comsol -open myapp.mph` to open an application. Applications can be run or edited with the two other options.

CHANGING THE BACKGROUND COLOR OF THE GRAPHICS WINDOW

To change the default blue color scheme for the background of the 3D Graphics window, you can start the COMSOL Multiphysics software with the following command-line option:

```
-Dcs.canvascolor=255,0,0,0,255,0
```

In this example, the background becomes red and green. The first three numbers are the RGB (red, green, blue) values for the top color, and the last three numbers are the RGB values for the bottom color, with interpolated hues in between those two colors. All numbers are between 0 and 255 (inclusive). This option is also available when running COMSOL Multiphysics on Linux and Macintosh.

COMSOL MULTIPHYSICS SERVER COMMANDS

Use a COMSOL Multiphysics server command to start a COMSOL process ready to process computational requests. A COMSOL Multiphysics server listens for TCP/IP connections from COMSOL Multiphysics clients. A COMSOL Desktop can become a COMSOL Multiphysics client by connecting to a COMSOL Multiphysics server. The LiveLink™ *for* MATLAB® also needs to connect to a COMSOL Multiphysics server.

The Windows syntax for the COMSOL Multiphysics server command is

```
comsolmphserver [<options>] [<target arguments>]
```

The following target arguments are available for a COMSOL Multiphysics server command:

TABLE 22-7: COMSOL MULTIPHYSICS SERVER TARGET COMMAND-LINE ARGUMENTS

COMSOL MULTIPHYSICS SERVER OPTION	DESCRIPTION
`-graphics`	Start the server with graphics libraries. This displays plots on the server when you are connected with a client (that is, not with the COMSOL GUI).
`-ipv6`	Make COMSOL Multiphysics server listen on an IPv6 port.
`-login {info}|force|never|auto`	Ask for login information. `info` means that only missing information is asked for. `force` resets the password. `never` requires that the login information is available. `auto` automatically creates a new username and password.
`-multi {auto}|on|off`	Accept repeated client connections.
`-passwd reset|nostore`	Specify that you want to provide a new password. To avoid storing the new password on file, use `nostore`.
`-port <port>`	Specify a TCP/IP port, *<port>*, to listen for attempts to connect. The *<port>* is the server port, or 0 for a random free port.
`-portfile <path>`	Specify that COMSOL Multiphysics writes its server port to the given *<path>* when it has started listening.
`-silent`	Do not listen to standard input.
`-user <user>`	Specify login name for a user.

Accessing the COMSOL Multiphysics Server Computer

The server computer can be accessed in several ways. You can log in to a machine that is dedicated to a single person. You can also connect to the server computer by using Remote Desktop. Start the COMSOL Multiphysics server from the **Start** menu. If several people want to access a single Windows computer to run the COMSOL Multiphysics server, you must use Windows Terminal Server or another tool that allows multiple users to log in on the same Windows server. In some Windows versions, Microsoft® provides a Telnet Server with which you can log in through a terminal window. When using a terminal window to log in on Windows, use the `comsolmphserver` command to start the COMSOL Multiphysics server.

Login Information

When a COMSOL Multiphysics server is started for the first time, you are asked for a username and password. Select a username and a password, which COMSOL Multiphysics then uses in communications between the COMSOL Multiphysics client and the server. You must also specify a matching username and password in the

Connect to Server dialog box. The software writes this login information in the subdirectory `.comsol/v55/login.properties` in your Windows home directory.

Client-Server Security Issues

COMSOL Multiphysics can operate in a client-server mode where COMSOL Multiphysics runs as a separate client and a server. COMSOL uses a TCP/IP connection to send data between the server and the client.

!	Always make sure that untrusted users cannot access the COMSOL login information. Protect the file `.comsol/v55/login.properties` in your home directory. This is important when running COMSOL Multiphysics in client-server mode. Alternatively, start the COMSOL Multiphysics server with the `-passwd nostore` option, and clear the **Remember username and password** check box when connecting to the server. This ensures that your login information is not stored on file.

Once a COMSOL Multiphysics server is started, a person with access to your login information could potentially connect to your COMSOL Multiphysics server. When a COMSOL Multiphysics client connects or disconnects from a remote computer, the COMSOL Multiphysics server displays a message. The connection from the client to the server is made with the TCP protocol.

The server and client are mutually authenticated using a challenge handshake authentication protocol, which means that login information cannot be easily obtained by someone eavesdropping on the network communication. The TCP connection between the client and the server is otherwise not encrypted. If you require encryption of the TCP connection, you can use third-party software based on protocols such as SSH or IPSEC.

To enhance security, you can limit the address range that can access the COMSOL Multiphysics server, both in your firewall and by changing the COMSOL Multiphysics server configuration. To limit the allowed address range in the server, edit the file `<COMSOL Installation Directory>\bin\tomcat\conf\server.xml` and find the lines:

```
<!-- To restrict access to the COMSOL server you can uncomment the block below.
```

and follow the instructions. The default port for the COMSOL Multiphysics server is 2036. You can change this by using the option `-port <port>` when launching COMSOL and COMSOL Multiphysics server.

Documentation Security Issues

To serve the COMSOL Desktop with documentation, COMSOL opens a separate documentation server on the client computer when you open the documentation.

To enhance security, you can limit the address range that can access the documentation server, both in your firewall and by changing the documentation server configuration. To limit the allowed address range in the server, edit the file `<COMSOL Installation Directory>\doc\help\conf\server.xml` and find the lines:

```
<!-- To restrict access to the documentation server you can uncomment the block below.
```

and follow the instructions. The default port for the documentation server is 8090. You can change this by using the option `-docport <docport>` when launching COMSOL Multiphysics.

COMSOL MULTIPHYSICS CLIENT COMMANDS

Use a COMSOL Multiphysics client command to start a COMSOL Desktop with a the Connect to Server dialog box open.

The syntax for the COMSOL Multiphysics client command is

```
comsolmphclient [<options>] [<target arguments>]
```

The following target arguments are available for a COMSOL Multiphysics client command:

TABLE 22-8: COMSOL TARGET COMMAND-LINE ARGUMENTS

COMSOL MULTIPHYSICS CLIENT OPTIONS	DESCRIPTION
`-open <file>`	Open file
`-port <port>`	Specify a TCP/IP port to connect to
`-server <server name>`	Specify server to connect to

COMSOL BATCH COMMANDS

Use the COMSOL batch command to run COMSOL jobs without a user interface. Run both Model MPH-files and model files for Java with the COMSOL batch command. Model files for Java need to be compiled before running.

The Windows syntax for the COMSOL batch command is

```
comsolbatch [<options>] [<target arguments>]
```

Its detailed target arguments are:

TABLE 22-9: COMSOL BATCH-SPECIFIC ARGUMENTS

COMSOL BATCH TARGET ARGUMENTS	DESCRIPTION
`-alivetime <seconds>`	The time between writing status on disc.
`-batchlog <filename>`	File to store log in. If not used, the log appears in the command window.
`-batchlogout`	Log to standard out when storing on file.
`-cancel`	Stop the current solver without returning any data. See below.
`-checklicense <filename>`	Print license requirements for a Model MPH-file.
`-classpathadd <classpath>`	Additional classpath.
`-clearmesh`	Clear all meshes,
`-clearsolution`	Clear all solutions (except probe data),
`-client`	Run as client.
`-continue`	Continue computing an interrupted batch job.
`-dev <filename>`	Path to a JAR-file with additional classes to call from the batch class file.
`-error {on}|off`	Stop if an error occurs.
`-graphics`	Start COMSOL batch with graphics libraries. This displays plots during analysis.
`-host`	Connect to host.
`-inputfile <filename>`	Run a Model MPH-file or class file.
`-job <job tag>`	The batch job to run.

`-jobfile <filename>`	Specify a text file using the following format:
	`<inputfile0> <outputfile0>`
	`<inputfile1> <outputfile1>`
	`<inputfile2> <outputfile2>`
	…
	Each input-output pair will be run as a batch job consecutively. Other batch-specific options specified at the command line are applied to each of the listed jobs. In addition, the list can be updated continuously during the batch process.

TABLE 22-9: COMSOL BATCH-SPECIFIC ARGUMENTS

COMSOL BATCH TARGET ARGUMENTS	DESCRIPTION
`-methodcall <tag> -inputfile <filename>`	Run a method call with the given tag. The file in <filename> contains the method call. See the documentation for model.methodCall() in the *COMSOL Multiphysics Programming Reference Manual* for additional input arguments that can be used from batch commands with `-methodcall` for passing input values as arguments to a method call.
`-mode {batch}|desktop`	Ignore Batch and Cluster Computing settings. See Ignoring Batch and Cluster Computing Settings below.
`-norun`	Do not compute the model. This option is useful if you, for example, just want to run `-clearsolution` or `-clearmesh` on a model that already includes a solution or mesh and then save it, without a solution or mesh, without computing the model first.
`-nosave`	Do not save the resulting model.
`-outputfile <filename>`	Save a Model MPH-file using the given filename. If output is not given, the input file is overwritten with the output.
`-paramfile <filename>`	Table file containing parameter names in the first row and corresponding parameter value tuples in the following rows. That is, the parameter names should be on the first row (space separated), and the parameter values (if only one tuple) should be space separated on the second row. If you want to solve for more tuples, more rows are added in the same manner.
`-pindex <parameter indices>`	Comma-separated list of parameter indices (integers). The number of indices given has to correspond to the number of arguments given by `-plist`.
`-plist <parameter value>`	Comma-separated list of parameter values. For information about providing parameters using argument, see About Providing Parameters below.
`-pname <parameter name>`	Comma-separated list of parameter names. For information about providing parameters using argument, see About Providing Parameters below.
`-port`	Connect to port.
`-prodargs`	Add extra command-line arguments using `-prodargs` followed by the arguments last in the call to COMSOL batch.
`-recover`	Recover and continue computation.
`-stop`	Stop the current solver when it has finished, returning available data. See below.
`-stoptime <time to stop>`	Stop the batch job after a certain time (in seconds).
`-study <study tag>`	The study to compute.
`-usebatchlic`	Use batch license (requires batch licenses).

Stopping and Canceling a Batch Job

You can stop a batch job using the following command:

```
comsolbatch -stop <level> -inputfile <filename>
```

where `<level>` is the level to stop the process on. Set the level to a high value in order to stop as soon as possible. By default, it is set to 100. The `-inputfile` option indicates the filename of the model that another process is running. The inputfile arguments should be consistent with the one specified to launch another process. That is, either the same inputfile arguments should be provided or the `-inputfile` should be the same as the `-outputfile` specified to launch another process.

You can cancel a batch job using the following command:

```
comsolbatch -cancel -inputfile <filename>
```

The `-inputfile` option indicates the filename of the model that another process is running. The inputfile arguments should be consistent with the one specified to launch another process. That is, either the same inputfile

arguments should be provided or the `-inputfile` should be the same as the `-outputfile` specified to launch another process.

Example

To use the COMSOL Batch mode to solve a model, run the following command:

```
comsolbatch -inputfile in.mph -outputfile out.mph -study std1
```

This command starts COMSOL Batch, solves the model in the Model MPH-file with the given filename (`in.mph` in this example) using the active solver settings in the model, and stores the solution in the `out.mph`. You can also use multiple sets of input files and output files, stored in a file using the `-jobfile` option.

The `-study` option directs COMSOL Multiphysics to run a certain study. The study is identified by its tag. In the COMSOL Desktop, select **Show Name and Tag** under **Model Builder Node Label** to see the tags of the jobs under **Study** within curly braces in the Model Builder. In the model object, determine the tags of the jobs by the command `model.study().tags()`. You can determine the name of each study by `model.study(<tag>).name()` using one of the job tags.

The `-job` option works similar to the `-study` option. It directs COMSOL Multiphysics to start a certain job. The job is identified by its tag. In the model object, determine the tags of the jobs by the command `model.batch().tags()`. You can determine the name of each job by `model.batch(<tag>).name()` using one of the job tags.

The `-usebatchlic` option makes COMSOL use batch licenses for the job. This option is equivalent to the **Use batch license** check box available in the **Cluster Computing** and **Cluster Sweep** study nodes. Using batch licenses for a cluster computing or cluster sweep job means that you can continue working in the COMSOL Desktop while the job is running using only a single FNL license.

For the `-recover` option, the working directory (where all .log, and .status files are generated) will contain the recovery file, which contains information about the recovery folder in the case that the COMSOL software stops working. If the `-recover` option is specified, the model from the recovery directory will be opened. If opening that model succeeds, a continue operation will be performed; otherwise, the input filename model will be simulated.

Ignoring Batch and Cluster Computing Settings

When `-mode` is `batch` (the default), all Batch and Cluster Computing settings are ignored: that is, Batch and Cluster Computing features will not start any batch jobs as they will do when you click **Compute** in the COMSOL Desktop.

When `-mode` is `desktop`, Batch and Cluster Computing settings will be used. This case corresponds to clicking **Compute** in the COMSOL Desktop. All paths in the **Batch** and **Cluster Computing** nodes must correspond to paths that you would set up in the COMSOL Desktop if you started it and clicked **Compute** instead of running the COMSOL batch command.

About Providing Parameters

You can provide parameters as parameter names and corresponding values using the `-pname` and `-plist` arguments, respectively. For example, `-pname a,b -plist 1,2` corresponds to

```
model.param().set("a",1);
model.param().set("b",2);
```

which means that any global parameters with the same names are overwritten by these new values. The model will then use these new values. Also note that the model is saved with a new name that contains the parameter tuple. Parametric sweeps will work as if you set the global parameters `a` to 1 and `b` to 2 and then compute a parametric sweep. Multiple tuples (such as `-plist 1,2,3,4`) will be saved in multiple files.

THE COMSOL BATCH COMMANDS FOR UPDATING IMAGES IN POWERPOINT PRESENTATIONS

The `comsolpowerpointbatch` command updates linked images in PowerPoint® presentations. The command is available on Windows only, and it requires that PowerPoint is installed. The command syntax is

```
comsolpowerpointbatch [<options>] [<target arguments>]
```

The following optional target arguments are available:

TABLE 22-10: COMSOLPOWERPOINTBATCH ARGUMENTS FOR UPDATING IMAGES IN PRESENTATIONS

COMSOLPOWERPOINTBATCH ARGUMENTS	DESCRIPTION
`-update <path1;path2;path3>`	Required. Specifies the PowerPoint files, or folders to update. If multiple inputs are specified each input is separated using semicolon. An input path can be file path (ends with .pptx), or a folder path. If an input path is a folder path, all files ending with .pptx will be added as files to update. Only PowerPoint presentations with the file ending .pptx can be updated with the batch update.
`-outputfolder <folder path>`	Required. Specifies the folder where the updated PowerPoint files should be saved.
`-help`	Display the help for the command.
`-h`	Display the help for the command.
`-batchlog <filename>`	Optional. File to store the log in. If not used, the log appears in the command window. The log file is saved as plain text. The filename can be specified with or without a file extension. Allowed file extensions are: .log, .txt, and .text.
`-applications <path1;path2;path3>`	Optional. Provides a list of paths for overriding the paths saved in the PowerPoint presentations. All the model paths in the PowerPoint presentations that have the same short name as provided by -applicationnames will be overruled by the provided paths. If the -applicationnames argument is not used the short names are considered to be the file names, without the file extension as given by -applications. Each provided path must be a .mph file path.
`-applicationnames <shortName1,shortName2,shortName3>`	Optional. Can only be used if the -applications argument is also used, and must then match the number of paths provided by the -applications argument. Provides a list of model short names for overriding the paths saved in the PowerPoint presentations. All stored model paths that have the same short name as in the provided list will be overruled with the corresponding path given by -applications.
`-applicationsfile <path>`	Optional. Provides a file containing short names and paths for remapping applications. Each remapped application is specified in a single line and where the short name and the path is separated by an equal sign.
`-applicationsroot <path>`	Optional. This argument overrules the -applications, and -applicationsfile arguments. The specified path replaces the root part of the stored application paths in the prestentations. This is done by replacing different parts of the model paths until a match is found.
`-applicationpaths <path1;path2;path3>`	Optional. Provides a list of additional folders where to look for the .mph files. If multiple folders are specified each folder is separated using semicolon.
`-onlysavemphname`	Optional. When used only the .mph file name, without the folder path, will be saved in the updated PowerPoint presentation.

THE COMSOL COMPILE COMMAND

The `comsolcompile` command compiles a model file for Java for use by the COMSOL batch command or for loading class files into the GUI. With COMSOL Compiler, you can also use it to compile COMSOL applications into standalone executable applications. The Windows syntax for the COMSOL compile command is

```
comsolcompile [<options>] [<target arguments>] <file>.java
```

The Java file is mandatory. The following optional target arguments are available:

TABLE 22-11: COMSOL COMPILE ARGUMENTS FOR COMPILING JAVA-FILES

COMSOL COMPILE TARGET ARGUMENTS	DESCRIPTION
`-classpathadd <classpath>`	Additional classpath.
`-jdkroot <path>`	Path to the JDK root.
`-verbose`	Verbose output.

To compile an application in an MPH-file into a standalone executable application using COMSOL Compiler, use

```
comsolcompile <full path to MPH-file> [<compile arguments>]
```

Compiling applications requires a license for COMSOL Compiler™.

The following arguments are available:

TABLE 22-12: COMSOL COMPILE ARGUMENTS FOR COMPILING APPLICATIONS

COMSOL COMPILE ARGUMENTS	DESCRIPTION
`-icon <path>`	Path to image file for application icon.
`-libraries cad,weatherdata`	Optional data to include. Specify as a comma-separated list. CAD data is only applicable with the CAD Import Module or CAD LiveLink products. Weather data is only applicable with the Heat Transfer Module.
`-outputdir <path>`	Specify where the compiled application should be saved. The default is the directory where the application's MPH-file is located.
`-platforms windows,linux,macos`	The platforms to compile for. Specify as a comma-separated list. The default is the platform where the compiler is run.
`-runtime default | ask | <path>`	Specify where to store the runtime when running the application. The `default` option is the platform's default location. The `ask` option asks the user for the location of the runtime when running the application. The `<path>` option provides a location where the runtime should be unpacked and stored. Only specify a path when compiling for a single platform.
`-runtimewindows <path>`	Specify where the runtime should be unpacked on Windows.
`-runtimelinux <path>`	Specify where the runtime should be unpacked on Linux.
`-runtimemacOS <path>`	Specify where the runtime should be unpacked on macOS.
`-splash <path>`	Path to image file for splash screen.

Options not given are taken from the application's **Compiler** node, except for `-outputdir` and `-platforms`.

COMSOL CLUSTER COMMANDS

All COMSOL cluster commands require a floating network license.

See also Overview of Simulations on Shared- and Distributed-Memory Computers.

To start a COMSOL Desktop running in distributed mode interactively on a Windows cluster, type

```
mpiexec -n <number of nodes> comsolcluster.exe <options> [<target arguments>]
```

To start a COMSOL Multiphysics server running in distributed mode, for interactive use from a COMSOL Multiphysics client, on a Windows cluster, type

```
mpiexec -n 1 comsolmphserver.exe [<options>] <target arguments>] -cluster on : -n <number of nodes-1>
comsolclustermphserver.exe <options> [<target arguments>]
```

Note that all options and target arguments need to be repeated twice, when using the above command.

To start a cross-platform COMSOL Desktop running in distributed mode interactively on a Windows cluster, type

```
mpiexec -n <number of nodes> comsolclusterxpl.exe <options> [<target arguments>]
```

To start a COMSOL batch command running in distributed mode on a Windows cluster, type

```
mpiexec -n <number of nodes> comsolclusterbatch.exe <options> [<target arguments>]
```

The following cluster commands are available:

TABLE 22-13: COMSOL CLUSTER TARGETS

COMSOL CLUSTER COMMANDS	DESCRIPTION
`comsolcluster`	Run COMSOL Desktop in distributed mode interactively on a cluster
`comsolclusterbatch`	Run a COMSOL batch job on a cluster in distributed mode
`comsolclustermphserver`	Helper command to run COMSOL Multiphysics server on a cluster
`comsolclusterxpl`	Run the cross-platform COMSOL Desktop in distributed mode interactively on a cluster
`comsolmphserver -cluster on`	Run a COMSOL Multiphysics server in distributed mode, for interactive use from COMSOL Multiphysics client

The preferred way of starting COMSOL jobs is from the Job Configurations node in the COMSOL Desktop's model tree.

Micromixer — Cluster Version: Application Library path
COMSOL_Multiphysics/Tutorials/micromixer_cluster

If you need to start COMSOL cluster jobs from the command line, the preferred way is to use the `comsolclusterbatch` command because the `comsolclustermphserver` and `comsolcluster` commands require TCP/IP access from your client computer to the cluster node where COMSOL Multiphysics runs.

The Windows Configuration

- Make sure that Windows HPC Server 2008, Windows Server 2012 with HPC Pack 2012, or Windows Server 2016 with HPC Pack 2016 job scheduler is installed. Running distributed COMSOL on other Windows versions is not supported.
- Make sure that the Windows HPC Server working directory is set to point to the `comsol` command directory (*`<path to COMSOL install directory>`*`\bin\win64`). The install directory must be shared between the nodes on your cluster. In some network configurations, the firewall prevents you from starting MPI on a shared executable. To register the executable with the firewall, use the `clusrun` command to execute the `hpcfwutil` command on all nodes (for instance, to register `comsolclusterbatch`) use `clusrun /all hpcfwutil register comsolclusterbatch.exe` *`<shared path to COMSOL install directory>`*`\bin\win64\comsolclusterbatch.exe`
- You need to install Microsoft Visual Studio® runtime libraries on each compute node. You can install them from the `\ext` directory of the DVD using the `clusrun` command, for instance. (See https://www.comsol.com/support/knowledgebase/1083.)

- Also make sure that all nodes that you intend to run COMSOL Multiphysics on have access to the license manager and that you can start COMSOL Multiphysics running in nondistributed mode. The nodes require access to the license manager to check out licenses.
- Make sure you have installed the latest version of Microsoft MPI that is supported by your Windows version. Download and install the latest supported version of Microsoft MPI from Microsoft on your cluster nodes.

Using Microsoft MPI and SMPD on Standalone Computers

If you do not have Windows HPC Server installed on your Windows computers, you can still use the COMSOL cluster commands if you install COMSOL and Microsoft MPI on each computer that you want to use in the cluster. On each computer, you must then run the command

```
smpd
```

which is located in the Microsoft MPI installation subfolder `Bin`, as the user that will run the MPI job. You can then start the distributed mode by replacing the previous `mpiexec -n` *`<number of nodes>`* syntax with

```
mpiexec -hosts <number of nodes> <list of computer names> …
```

Here the `mpiexec` command is located in the same folder as `smpd`, and the local node should be listed first in the list of computer names if you want to run interactively. To start COMSOL Desktop in distributed mode, use the syntax

```
mpiexec -hosts <number of nodes> <list of computer names> comsolcluster.exe <options>
[<target arguments>]
```

Example of the COMSOL Batch Command

Schedule a job with the command

```
mpiexec -n -1 comsolclusterbatch.exe -np 2 -inputfile <filename>
```

to run a COMSOL batch job on a number of computational nodes given by `mpiexec`. For further information about the `mpiexec` command and Windows HPC Server, consult the documentation that was shipped with the product and the online manuals.

Example of the COMSOL Multiphysics Server Command

When a COMSOL Multiphysics server cluster job is created, a preference directory must be set and be reachable from all nodes to avoid problems with the server login; see The COMSOL Commands and Login Information. The preferences can be generated by starting COMSOL Multiphysics server once on the head node using the following command:

```
comsolmphserver.exe -prefsdir <prefsdir>
```

where *`<prefsdir>`* is a preference directory ***common*** to all nodes.

When the COMSOL Multiphysics server is started on the cluster, the port number is written to standard output, so a standard output file and a standard error file must be set for the cluster job. To start a COMSOL Multiphysics server, schedule a job with the following command:

```
mpiexec -n 1 comsolmphserver.exe -np 2 -prefsdir <prefsdir> -cluster on :
-n <number of nodes-1> comsolclustermphserver.exe -np 2 -prefsdir <prefsdir>
```

You must be able to access the cluster node where the COMSOL Multiphysics server runs from the COMSOL Multiphysics client computer.

COMSOL MPI Options

The COMSOL cluster target arguments specify what MPI library to use and what Scalapack version to use. There are several implementations of MPI. COMSOL by default uses the Windows HPC Server libraries. The COMSOL software also supports most MPI implementations based on MPICH2. It is recommended that the default library is used. In addition, the COMSOL software includes a compatibility mode, which you activate by adding the option `-mpi mpich2`. When using this option, both the variables `PATH` and `LD_LIBRARY_PATH` must include the MPI

implementation. It is also possible to use other MPI libraries based on MPICH2 using the option `-mpipath <path to shared library>`. The following options are available for COMSOL cluster commands:

TABLE 22-14: COMSOL CLUSTER OPTIONS

COMSOL CLUSTER OPTIONS	DESCRIPTION
`-mpi {auto} | mpich2 | whpc2008 | user | path`	MPI library to use
`-mpipath <file>`	MPI shared library file.[1]
`-scalapack {auto} | mpich2 | whpc2008 | user | path`	Scalapack library to use.
`-scalapackpath <path>`	Scalapack library path.

The Cluster Computing study allows you to set up a batch job for submission to a Windows HPC Server job scheduler. There are several settings that you can configure in the `comsol.ini` file to get default settings:

```
-Dcs.scheduler=<IP or network address>
-Dcs.clusteruser=<Username on cluster>
-Dcs.rundir=<Where the model file is located on the cluster>
-Dcs.comsoldir=<Installation path to comsol on the cluster>
```

Additionally you can configure the following commands to get default settings:

```
-Dcs.precmd=<Command line>
-Dcs.postcmd=<Command line>
```

These two lines add commands prior to the `comsol` command and after the `comsol` command, respectively. You can add `{nn}` or `{perhost}` to any of these pre- and postcommands, which configures the Cluster Computing study to use the number of nodes and number of nodes on each host from the corresponding settings for the Cluster Computing study. For more information, see Cluster Computing.

COMSOL MATLAB COMMAND

Use the COMSOL `matlab` command to access the COMSOL API through MATLAB. Enter the following command:

```
comsolmphserver matlab
```

which launches a COMSOL Multiphysics server in a console window, starts MATLAB, and connects MATLAB to the COMSOL Multiphysics server.

The following options are available for the `comsolmphserver matlab` command:

TABLE 22-15: COMSOL MATLAB OPTIONS

COMSOL MATLAB OPTIONS	DESCRIPTION
`-desktop`	Start with Desktop.
`-graphics`	Start the server with graphics libraries. This enables plotting on the server. Available only when running `comsolmphserver matlab [<options>]`.
`-host <hostname>`	Connect to host.
`-mlnosplash`	Start without MATLAB splash screen.
`-mlroot <path>`	MATLAB installation directory.
`-mlstartdir <path>`	Start in directory path <path>
`-nodesktop`	Start without Desktop.
`-port <hostname>`	Connect to port.

COMSOL Commands on Linux

Use the `comsol` command to start COMSOL products with detailed start-up options.

The general syntax of the COMSOL command is

```
comsol [<target>] [<options>] [<target arguments>]
```

where square brackets indicate optional arguments. The `comsol` command can be combined with optional targets to achieve various results. The table below lists the command and targets:

TABLE 22-16: COMSOL COMMANDS AND TARGETS

COMMAND AND TARGET	DESCRIPTION	AVAILABILITY
`comsol`	Run standalone COMSOL Multiphysics	
`comsol batch`	Run a COMSOL MPH-file or class file	
`comsol compile`	Compile a model file for Java or compile an application into an executable application (the latter option requires COMSOL Compiler)	
`comsol doc`	Launch the COMSOL Documentation window	
`comsol mphclient`	Run COMSOL Multiphysics client	
`comsol mphserver`	Start COMSOL Multiphysics server	
`comsol mphserver matlab`	Start MATLAB® and connect to a COMSOL Multiphysics server	Requires LiveLink™ *for* MATLAB® license
`comsol hydra`	Run COMSOL Hydra commands	Requires CLUSTERNODE license

The `comsol` command is located in the `bin` folder in the COMSOL installation directory.

INI FILES

There is a number of `.ini` files in the subdirectories `glnx86` and `glnxa64` in the `bin` directory. It is sometimes recommended that you edit these files. For example, you can add options to any of the above commands by modifying the corresponding `ini` file. To change the option `opt` to value `val`, add the line

```
-Dopt=val
```

to the file `comsol.ini`. Change the file `comsolbatch.ini` for `comsol batch`, and similarly for the other COMSOL targets.

OPTIONS

You can enter various options after the `comsol` command and target. Table 22-17 lists the options (See `[<options>]` in the command syntax) available for all `comsol` commands. Always issue these options between the command and the target (if any).

TABLE 22-17: COMSOL OPTIONS (CURLY BRACES INDICATE DEFAULT VALUES)

COMSOL OPTION	DESCRIPTION
`<target> -h`	Print target-specific help.
`-3drend ogl | sw`	3D renderer: OpenGL or software rendering.
`-alloc {native} | scalable`	Memory allocator: Select from using the Linux® native memory allocator or the scalable memory allocator from the Intel® Threading Building Blocks library.[2]
`-applicationsroot <path>`	Specify custom path to the COMSOL Application Libraries root directory.[1]
`-autosave {on} | off`	Control saving of recovery files.
`-blas {auto} | mkl | blas | blis | path`	BLAS library to use.[3]
`-blaspath <path>`	BLAS library path.[3]
`-c <path>`	License file path.
`-ckl`	Use class-kit license.

TABLE 22-17: COMSOL OPTIONS (CURLY BRACES INDICATE DEFAULT VALUES)

COMSOL OPTION	DESCRIPTION
`-clusterstorage all | single | shared`	Cluster storage format. The `single` format does I/O only from the root node, while the `shared` format does I/O using distributed I/O operations. The shared format requires that all nodes have access to the same storage area and the same temporary storage area.
`-comsolinifile <path>`	Specify custom path to .ini-file used when starting COMSOL.
`-configuration <path>`	Path to directory for storing the state for the GUI between sessions and for performing different caching tasks. The configuration directory is by default a subdirectory to the preference directory. However, the default location of the configuration directory is not affected if you use the `-prefsdir` option. When running in batch or cluster mode, add `@process.id` to get a unique identifier to the path (for example, `-configuration /tmp/comsol_@process.id`).
`-data`	Path to a workspace directory for storing internal workspace information. The workspace directory is by default a subdirectory to the preference directory. However, the default location of the workspace directory is not affected by the `-prefsdir` option. *The workspace directory is cleared when COMSOL is launched.* When running in batch or cluster mode, add `@process.id` to get a unique identifier to the path (for example, `-data /tmp/comsol_@process.id`).
`-docroot <path>`	Specify custom path to the COMSOL documentation root directory. [1]
`-forcegcc`	Force load of GCC libraries.
`-h`	Print general help.
`-keeplicenses on | {off}`	Keep checked out licenses when creating or opening an application.
`-mpmode throughput | turnaround | owner`	Multiprocessor mode.[2]
`-np <no. of cores>`	Number of cores.[2]
`-numafirst <numa number>`	Set first NUMA node (socket) to bind process to.[2]
`-numasets <no. of sets>`	Number of NUMA sets (sockets).[2]
`-prefsdir <path>`	Preference directory.
`-recoverydir <path>`	Path to recovery directory. The recovery directory is by default a subdirectory to the preference directory.
`-tmpdir <path>`	Temporary file directory. Whitespace is not supported in the file directory path,
`-v`, `-version`	Print COMSOL version.
REFERENCE	

[1] See Documentation and Application Libraries Root Directories.

2 See Shared-Memory Options.

3 See BLAS Options.

For the `-tmpdir` option, the COMSOL Multiphysics software uses the specified directory to store temporary files. Use the `-prefsdir` option to specify the directory where COMSOL Multiphysics stores the preference file.

Documentation and Application Libraries Root Directories

In a default COMSOL Multiphysics installation, the documentation files are located in the directory `doc` under the installation root directory. You can use the `-docroot` option if you want to move the documentation directory to a different location. Similarly, use the `-applicationsroot` option if you want to move the Application Libraries root directory `applications` from its default location under the COMSOL Multiphysics installation root. Relocating the documentation and Application Libraries root directories can be useful for administering Application Library Update; see The Application Library Update Window.

	Setting the paths to the documentation and Application Libraries root directories using these options does not in itself move the directories and their contents.

Shared-Memory Options

Use the option `-np` to control the number of cores used. The default is to use all available cores (processing units).

Use the option `-numasets` to control the number of nonuniform memory access (NUMA) node sets that the COMSOL Multiphysics software should take into account. This is usually the number of processor sockets that the hardware is using. If you only set the `-np` option, the number of sockets is determined automatically so that sufficient number of sockets are used by default.

Depending on how loaded the machine is, you can control how COMSOL Multiphysics uses the available processors with the `-mpmode` option. The following options are available:

TABLE 22-18: COMSOL MULTIPROCESSOR MODE OPTIONS

MPMODE OPTION	DESCRIPTION
`owner`	Provides the highest performance in most cases.
`throughput`	Is expected to give the best performance when several different processes are running actively at the same time as COMSOL Multiphysics.
`turnaround`	Typically provides the best performance when no other processes than COMSOL Multiphysics are active.

Use the option `-alloc` to specify memory allocator type. The default is to use the native memory allocator. The scalable memory allocator can increase performance significantly for computers with many cores but uses more memory.

	You can also specify the number of cores and sockets and the use of the scalable allocators as preferences on the **Multicore and Cluster Computing** page in the **Preferences** dialog box. To specify those numbers manually, select the **Number of cores** and **Number of sockets** check boxes to enter a number in the associated text fields. By default, all cores are used and the number of sockets are set automatically. If you lower the number of cores, it is good practice to also lower the number of sockets. The preference option for the scalable allocator is called **Optimized for multicore**. If you want to choose another memory allocator than the default setting, select the Memory allocator check box and the choose **Native** or **Optimized for multicore**.

Sometimes you might want to experiment to find the options that work best for your configuration.

BLAS Options

BLAS is a set of functions for basic linear algebra operations. A large portion of the computational engine in the COMSOL software relies on BLAS. The COMSOL software provides for the following BLAS-related options:

TABLE 22-19: COMSOL BLAS OPTIONS

BLAS OPTION	DESCRIPTION
auto	The default option is to use the Intel MKL library.
mkl	Use the Intel MKL library (included with installation).
blas	Use the standard BLAS library (included with installation).
blis	Use the BLIS library (included with installation).
path	Use a BLAS library specified using the option `-blaspath` or the environment variable `COMSOL_BLAS_PATH`.

MKL, BLAS, and BLIS are distributed with COMSOL Multiphysics. BLIS is similar to BLAS but can in some case provide improved performance.

If you want to use a different BLAS library than the ones provided by COMSOL, make sure that COMSOL Multiphysics can find the library. The simplest way for COMSOL Multiphysics to find a library is to put it in `/lib/win64` or somewhere in the standard search path. Also provide the path to any sublibraries needed by the library. Set the search path to point to the directory where the library is installed. To do so, use the environment variable `PATH`. Your library must support both the standard FORTRAN LAPACK interface and the standard FORTRAN BLAS interface. If your LAPACK and BLAS interface consists of several libraries, use the path to the LAPACK library.

GCC Options

By default COMSOL Multiphysics uses the GCC libraries installed on the system. If COMSOL Multiphysics is unable to start, the software uses the GCC libraries shipped with COMSOL Multiphysics. The option `-forcegcc` is intended for use together with the LiveLink™ *for* MATLAB®; use it if you are unable to make function callbacks to MATLAB.

Application Options

The following options are used to specify inputs to an application with command-line options.Find more information about these options in the section *The Application Argument Node* in the *Application Builder Reference Manual*.

TABLE 22-20: COMSOL TARGET COMMAND-LINE ARGUMENTS

COMSOL APPLICATIONS OPTIONS	DESCRIPTION
`-appargnames` *`<names>`*	Comma-separated list of argument names.
`-appargvalues` *`<values>`*	Comma-separated list of argument values.
`-appargsfile` *`<filename>`*	A file with arguments to the application. Each line in the file should have the format `<name>=<value>`.
`-appargvarlist` *`<names>`*	Comma-separated list of argument names whose values are on file.
`-appargfilelist` *`<filenames>`*	Comma-separated list of file names. Each file contains the value for one argument.

COMSOL COMMANDS

In additions to the options in Table 22-17, the standalone COMSOL command supports the following options on Linux.

TABLE 22-21: COMSOL COMMAND-LINE ARGUMENTS

COMSOL OPTIONS	DESCRIPTION
`-open <file>`	Open application
`-run <file>`	Run application

COMSOL MULTIPHYSICS SERVER COMMANDS

Use a COMSOL Multiphysics server command to start a COMSOL process ready to process computational requests. A COMSOL Multiphysics server listens for TCP/IP connections from COMSOL Multiphysics clients. A COMSOL Desktop can become a COMSOL Multiphysics client by connecting to a COMSOL Multiphysics server. The LiveLink™ *for* MATLAB® also needs to connect to a COMSOL Multiphysics server.

The syntax for the COMSOL Multiphysics server command is

```
comsol [<options>] mphserver [<target arguments>]
```

The following target arguments are available for a COMSOL Multiphysics server command.

TABLE 22-22: COMSOL TARGET COMMAND-LINE ARGUMENTS

COMSOL MULTIPHYSICS SERVER OPTIONS	DESCRIPTION
`-graphics`	Start the server with graphics libraries. This displays plots on the server when you are connected with a client (that is, not with the COMSOL GUI).
`-ipv6`	Make COMSOL Multiphysics server listen on an IPv6 port.
`-login {info} | force | never | auto`	Ask for login information. `info` means that only missing information is asked for. `force` resets the password. `never` requires that the login information is available. `auto` automatically creates a new username and password.
`-multi {auto} | on | off`	Accept repeated client connections.
`-passwd reset | nostore`	Specify that you want to provide a new password. To avoid storing the new password on file use <nostore>.
`-port <port>`	Specify a TCP/IP port to listen for connect attempts.
`-silent`	Do not listen to standard input.
`-user <user>`	Specify login name for a user.

Accessing the COMSOL Multiphysics Server Computer

To access the computer running the COMSOL Multiphysics server, simply log in on the server computer by using `ssh` or a similar command, then enter the `comsol mphserver` command.

Login Information

When you start a COMSOL Multiphysics server for the first time, you are asked for a username and password. Select a username and a password, which COMSOL then uses in communications between the COMSOL Multiphysics client and the server. You must also specify a matching username and password in the **Connect to Server** dialog box. The software writes this login information in the subdirectory `.comsol/v55/login.properties` in your home directory.

Client-Server Security Issues

COMSOL Multiphysics can operate in a client-server mode where COMSOL Multiphysics runs as a separate client and a server. The COMSOL software uses a TCP/IP connection to send data between the server and the client.

!	Always make sure that untrusted users cannot access the COMSOL login information. Protect the file `.comsol/v55/login.properties` in your home directory. This is important when using the COMSOL Multiphysics client-server configuration. Alternatively, start the COMSOL Multiphysics server with the `-passwd nostore` option, and clear the **Remember username and password** check box when connecting to the server. This ensures that your login information is not stored on file.

Once you start a COMSOL Multiphysics server, a person with access to your login information could potentially connect to your COMSOL Multiphysics server. When a COMSOL Multiphysics client connects or disconnects from a remote computer, the COMSOL Multiphysics server displays a message. The connection from the client to the server is made with the TCP protocol.

The server and client are mutually authenticated using a challenge handshake authentication protocol, which means that login information cannot be easily obtained by someone eavesdropping on the network communication. The TCP connection between the client and the server is otherwise not encrypted. If you require encryption of the TCP connection, you can use third-party software based on protocols such as SSH or IPSEC.

To enhance security, you can limit the address range that can access the COMSOL Multiphysics server, both in your firewall and by changing the COMSOL Multiphysics server configuration. To limit the allowed address range in the server, edit the file `<COMSOL Installation Directory>/bin/conf/server.xml` and find the lines:

```
<!-- To restrict access to the COMSOL server you can uncomment the block below.
```

and follow the instructions.

The default port for the COMSOL Multiphysics server is 2036. You can change this by using the option `-port <port>` when launching COMSOL and COMSOL Multiphysics server.

Documentation Security Issues

To serve the COMSOL Desktop with documentation, COMSOL Multiphysics opens a separate documentation server on the client computer when you open the documentation. The documentation server program, `comsoldocserver.exe`, is always installed, even when you choose online documentation. It is nontrivial to start the documentation server, so it is typically only started from `comsol.exe` or `comsoldoc.exe`.

To enhance security, you can limit the address range that can access the documentation server, both in your firewall and by changing the documentation server configuration. To limit the allowed address range in the server, edit the file `<COMSOL Installation Directory>/doc/help/conf/server.xml` and find the lines:

```
<!-- To restrict access to the documentation server you can uncomment the block below.
```

and follow the instructions. The default port for the documentation server when started from `comsol.exe` is 8090 or the nearest higher free port. You can change this by using the option `-docport <docport>` when launching COMSOL. The port used by the documentation server when started from `comsoldoc.exe` is 8390 or the nearest higher free port.

The communication via the COMSOL documentation server is not protected by a password or encrypted but can only access the locally installed COMSOL Multiphysics documentation. If you do not want the documentation server to access any locally installed data, use the online documentation.

Port Summary

The following table lists the default ports used by the COMSOL Multiphysics servers:

TABLE 22-23: PORT USAGE

PORT NUMBER	SERVER	DESCRIPTION
2036	COMSOL Multiphysics server	For communication between the client and server when COMSOL Multiphysics operates in a client-server mode. The connection is password protected.
8090	Documentation server	Documentation server port when started from `comsol.exe`.
8390	Documentation server	Documentation server port when started from `comsoldoc.exe`.

COMSOL MULTIPHYSICS CLIENT COMMANDS

Use a COMSOL Multiphysics client command to start a COMSOL Desktop with the Connect to Server dialog box open.

The syntax for the COMSOL Multiphysics client command is

```
comsol [<options>] mphclient [<target arguments>]
```

The following target arguments are available for a COMSOL Multiphysics client command:

TABLE 22-24: COMSOL TARGET COMMAND-LINE ARGUMENTS

COMSOL MULTIPHYSICS CLIENT OPTIONS	DESCRIPTION
`-open <file>`	Open file.
`-port <port>`	Specify a TCP/IP port to connect to.
`-server <server name>`	Specify server to connect to.

COMSOL BATCH COMMANDS

Use the COMSOL batch command to run COMSOL jobs without a GUI. You can run both Model MPH files and model files for Java with the COMSOL batch command. Model files for Java need to be compiled before running.

The syntax for the COMSOL batch command is

```
comsol [<options>] batch [<target arguments>]
```

Its detailed target arguments are:

TABLE 22-25: COMSOL BATCH-SPECIFIC ARGUMENTS

COMSOL BATCH OPTIONS	DESCRIPTION
`-alivetime <seconds>`	The time between writing status on disc.
`-batchlog <filename>`	File to store log in. If not used, the log appears in the command window.
`-cancel`	Stop the current solver without returning any data. See below.
`-checklicense <filename>`	Print license requirements for a Model MPH-file.
`-clearmesh`	Clear all meshes,
`-clearsol`	Clear all solutions (except probe data),
`-client`	Run as client.
`-continue`	Continue computing an interrupted batch job.
`-dev <filename>`	Path to a JAR-file with additional classes to call from the batch class file.
`-error {on}|off`	Stop if an error occurs.
`-graphics`	Start COMSOL batch with graphics libraries. This displays plots during analysis.

TABLE 22-25: COMSOL BATCH-SPECIFIC ARGUMENTS

COMSOL BATCH OPTIONS	DESCRIPTION
`-host`	Connect to host.
`-inputfile <filename>`	Run a Model MPH-file or class file.
`-job <job tag>`	The batch job to run.
`-methodcall <tag> -inputfile <filename>`	Run a method call with the given tag. The file in <filename> contains the method call.
`-mode {batch}|desktop`	Ignore Batch and Cluster Computing settings. See Ignoring Batch and Cluster Computing Settings above.
`-nosave`	Do not save the resulting model.
`-outputfile <filename>`	Save a Model MPH-file using the given filename. If output is not given, the input file is overwritten with the output.
`-paramfile <filename>`	Table file containing parameter names in the first row and corresponding parameter value tuples in the following rows. That is, the parameter names should be on the first row (space separated), and the parameter values (if only one tuple) should be space separated on the second row. If you want to solve for more tuples, more rows are added in the same manner.
`-pindex <parameter indices>`	Comma-separated list of parameter indices (integers). The number of indices given has to correspond to the number of arguments given by `-plist`.
`-plist <parameter value>`	Comma-separated list of parameter values.
`-pname <parameter name>`	Comma-separated list of parameter names.
`-port`	Connect to port.
`-recover`	Recover and continue computation.
`-stop`	Stop the current solver when it has finished, returning available data. See below.
`-study <study tag>`	The study to compute.
`-usebatchlic`	Use batch license (requires batch licenses).

Stopping and Canceling a Batch Job

You can stop a batch job using the following command:

```
comsol batch -stop <level> -inputfile <filename>
```

where `<level>` is the level to stop the process on. Set the level to a high value in order to stop as soon as possible. By default, it is set to 100. The `-inputfile` option indicates the filename of the model that another process is running. The inputfile arguments should be consistent with the one specified to launch another process. That is, either the same inputfile arguments should be provided or the `-inputfile` should be the same as the `-outputfile` specified to launch another process.

You can cancel a batch job using the following command:

```
comsol batch -cancel -inputfile <filename>
```

The `-inputfile` option indicates the filename of the model that another process is running. The inputfile arguments should be consistent with the one specified to launch another process. That is, either the same inputfile arguments should be provided or the `-inputfile` should be the same as the `-outputfile` specified to launch another process.

Example

To use the COMSOL batch mode to solve a model, run the following command:

```
comsol batch -inputfile in.mph -outputfile out.mph -study std1
```

This command starts COMSOL Multiphysics in batch mode, solves the model in the Model MPH-file with the given filename using the active solver settings in the model, and stores the solution in the `out.mph`.

The `-study` option directs COMSOL Multiphysics to run a certain study. The study is identified by its tag. In the COMSOL Desktop, select **Show Name and Tag** under **Model Builder Node Label** to see the tags of the jobs under **Study** within curly braces in the Model Builder. In the model object, determine the tags of the jobs by the command `model.study().tags()`. You can determine the name of each study by `model.study(<tag>).name()` using one of the job tags.

The `-job` option works similarly to the `-study` option. It directs COMSOL Multiphysics to start a certain job. The job is identified by its tag. In the model object, determine the tags of the jobs by the command `model.batch().tags()`. You can determine the name of each job by `model.batch(<tag>).name()` using one of the job tags..

If the model uses an inner parametric solver (in a nested parametric sweep), the **Job Configurations** node is ignored by the batch job. In such cases, you need to switch to an outer parametric solver.

The `-usebatchlic` option makes COMSOL use batch licenses for the job. This option is equivalent to the **Use batch license** check box available in the **Cluster Computing** and **Cluster Sweep** study nodes. Using batch licenses for a cluster computing or cluster sweep job means that you can continue working in the COMSOL Desktop while the job is running using only a single FNL license.

For the `-recover` option, the working directory (where all .log, and .status files are generated) will contain the recovery file, which contains information about the recovery folder in the case that the COMSOL software stops working. If the `-recover` option is specified, the model from the recovery directory will be opened. If opening that model succeeds, a continue operation will be performed; otherwise, the input filename model will be simulated.

THE COMSOL COMPILE COMMAND

The `comsol compile` command compiles a model file for Java for use by the COMSOL batch command or for loading class files into the GUI. With COMSOL Compiler, you can also use it to compile COMSOL applications into standalone executable applications. The Linux syntax for the COMSOL compile command is

```
comsol [<options>] compile [<target arguments>] <file>.java
```

The Java file is mandatory. The following optional target arguments are available:

TABLE 22-26: COMSOL COMPILE OPTIONS

COMSOL COMPILE OPTIONS	DESCRIPTION
`-classpathadd <classpath>`	Additional classpath
`-jdkroot <path>`	Path to the JDK root
`-verbose`	Verbose output

To compile an application in an MPH-file into a standalone executable application using COMSOL Compiler, use

```
comsol compile <full path to MPH-file> [<compile arguments>]
```

Compiling applications requires a license for COMSOL Compiler™.

The following arguments are available:

TABLE 22-27: COMSOL COMPILE ARGUMENTS FOR COMPILING APPLICATIONS

COMSOL COMPILE ARGUMENTS	DESCRIPTION
`-icon <path>`	Path to image file for application icon.
`-libraries cad,weatherdata`	Optional data to include. Specify as a comma-separated list. CAD data is only applicable with the CAD Import Module or CAD LiveLink products. Weather data is only applicable with the Heat Transfer Module.
`-outputdir <path>`	Specify where the compiled application should be saved. The default is the directory where the application's MPH-file is located.
`-platforms windows,linux,macos`	The platforms to compile for. Specify as a comma-separated list. The default is the platform where the compiler is run.
`-runtime default | ask | <path>`	Specify where to store the runtime when running the application. The `default` option is the platform's default location. The `ask` option asks the user for the location of the runtime when running the application. The `<path>` option provides a location where the runtime should be unpacked and stored. Only specify a path when compiling for a single platform.
`-runtimewindows <path>`	Specify where the runtime should be unpacked on Windows.
`-runtimelinux <path>`	Specify where the runtime should be unpacked on Linux.
`-runtimemacOS <path>`	Specify where the runtime should be unpacked on macOS.
`-splash <path>`	Path to image file for splash screen.

Options not given are taken from the application's **Compiler** node, except for `-outputdir` and `-platforms`.

COMSOL CLUSTER COMMANDS

Use the `comsol` command with the option `-nn <no. of nodes>`. `-nn` specifies the total number of compute nodes created. A COMSOL instance resides in each compute node and communicates with other compute nodes using MPI. A compute node is a process running on the operating system, and multiple compute nodes can be assigned to run on a single host.

See also Overview of Simulations on Shared- and Distributed-Memory Computers.

The syntax for the COMSOL cluster command is

```
comsol -nn <no. of nodes> [<options>] [<target>] [<target arguments>]
```

The following cluster commands are available:

TABLE 22-28: COMSOL CLUSTER TARGETS

COMSOL CLUSTER COMMANDS	DESCRIPTION
`comsol -nn <nn> batch`	Run a COMSOL batch job on a cluster in distributed mode
`comsol -nn <nn> mphserver`	Run COMSOL Multiphysics server in distributed mode on a cluster, for interactive use from a COMSOL Multiphysics client
`comsol -nn <nn>`	Run COMSOL Desktop in distributed mode interactively on a cluster

The preferred way of starting COMSOL cluster jobs is from the Study node in the COMSOL Desktop. If you need to start COMSOL cluster jobs from the command line, the preferred way is to use the `comsol -nn <nn> batch` command because the `comsol -nn <nn> mphserver` and `comsol -nn <nn>` commands require TCP/IP access from your client computer to the cluster node where COMSOL runs.

The following options are available for clusters on Linux:

TABLE 22-29: COMSOL CLUSTER OPTIONS

COMSOL CLUSTER OPTIONS	DESCRIPTION
`-clustersimple`	Simple startup of cluster.
`-f <path>`	Path to hostfile.
`-mpi {auto}` | `intel` | `mpich2` | `whpc2008` | `user` | `path`	MPI library to use.
`-mpiarg <arg>`	MPI cluster-specific command arguments.[1]
`-mpibootstrap {ssh}` | `rsh` | `fork` | `slurm` | `ll` | `lsf` | `sge` | `jmi`	Set bootstrap server for Hydra.
`-mpibootstrapexec <path>`	Executable used by bootstrap server.
`-mpidebug <debug level>`	Set the MPI output level.
`-mpienablex`	Enable Xlib forwarding.
`-mpifabrics fabric1:fabric2`	Select network fabrics where `fabric1` is one of <shm | dapl | tcp | tmi | ofa>, and `fabric2` is one of <dapl | tcp | tmi | ofa>.
`-mpihosts <hostnames>`	MPI hosts. Use a comma-separated list of hostnames as `<hostnames>`.
`-mpipath <file>`	MPI shared library file.
`-mpirmk <pbs>`	Select resource management kernel for a PBS scheduler.
`-mpiroot <path>`	MPI library installation root path.
`-nn <no. of nodes>`	Number of compute nodes.
`-nnhost <no. of nodes>`	Number of compute nodes on each host. For the `path` option, the environment variable `COMSOL_SCALAPACK_PATH` must be set.
`-scalapack {auto}` | `mkl` | `user` | `path`	Scalapack library to use. For the `path` option, the environment variable `COMSOL_SCALAPACK_PATH` must be set.
`-scalapackpath <path>`	Scalapack library path.
REFERENCE	
1 See Troubleshooting Distributed COMSOL and MPI.	

Running on Linux

COMSOL Multiphysics uses Hydra to initialize the MPI environment. To launch COMSOL Multiphysics with MPI, use the command line

```
comsol -nn <number of compute nodes> -f <filename>
```

The file `<filename>` should contain the hostnames of the physical nodes (or, alternatively, host) that you intend to use. You can find out the hostname of each physical node from the `hostname` command. Each physical node should be listed on a separate line in the file. You can also list the IP address of each physical node. The file can contain more hosts than you intend to use.

- You can set the remote node access mechanism that is used for connecting using the switch `-mpibootstrap`. The valid options are `ssh`, `rsh`, `fork`, `slurm`, `ll`, `lsf`, `sge`, and `jmi`. This is important if the cluster only supports a different remote node access mechanism than `ssh` because `ssh` is the default protocol used.
- Use the switch `-mpibootstrapexec` to set the path to the remote node access mechanism such as `/usr/bin/ssh`.
- The option `-mpidebug` sets the output level from MPI. The default is level 4.

- You can control the network fabrics used for communication with the option `-mpifabrics fabric1:fabric2` where `fabric1` is one of `shm`, `dapl`, `tcp`, `tmi`, or `ofa`, and `fabric2` is one of `dapl`, `tcp`, `tmi`, or `ofa`. Use this option if you are having trouble with the default fabrics used.
- Use `-mpienablex` to enable Xlib forwarding. Xlib forwarding is off by default.

Previously there was a shorthand for performing the COMSOL MPI environment initialization and starting COMSOL Multiphysics. The `-clustersimple` option is still supported but performs the same Hydra MPI initialization as other COMSOL command with cluster options specified. For example,

```
comsol -clustersimple batch -inputfile input.mph -outputfile output.mph
```

is equivalent to the following command when the specified number of compute nodes is 4:

```
comsol -nn 4 batch -inputfile input.mph -outputfile output.mph
```

So when no COMSOL cluster options are included in the command, the use of `-clustersimple` instructs the Intel MPI library to automatically detect the number of nodes that were scheduled to the program. However, explicitly setting the number of processes with the `-nn` option is common practice, as COMSOL Multiphysics can combine MPI with multithreading to obtain more efficient performance. If the `-nn` option is specified, then the `-clustersimple` option has no additional effect.

Starting Distributed COMSOL — Linux Examples

Make sure that COMSOL Multiphysics is able to start on all nodes where you intend to run it.

> **!** Each node requires access to the license manager. If the node is unable to check out a license, it aborts the startup process.

The following three examples show the command for starting distributed computing with COMSOL Desktop, COMSOL Multiphysics Server, and COMSOL batch mode, respectively. Each starts 4 computational nodes, one on each of the 4 hosts listed in the file `hostfile`:

```
comsol -nn 4 -f hostfile
comsol -nn 4 -f hostfile mphserver
comsol -nn 4 -f hosts batch -inputfile in.mph -outputfile out.mph
```

It is possible to specify the number of CPU cores for each COMSOL process. The following command uses the option `-np 2` to assign 2 CPU cores to each compute node:

```
comsol -nn 4 -np 2 -f hostfile
```

It is also possible to have more compute nodes than hosts. The following command initializes 8 compute nodes, assigning 2 compute nodes to each host:

```
comsol -nn 8 -nnhost 2 -f hostfile
```

For additional command-line options, see COMSOL Cluster Options in Table 22-29.

MPI Options

There are several implementations of MPI. COMSOL Multiphysics is shipped with the Intel MPI library but also supports most MPI implementations based on MPICH2. It is recommended that you use the default Intel MPI library. For running COMSOL Multiphysics on a computer that has MPICH2 installed, the COMSOL software also has a compatibility mode that you can activate by adding the option `-mpi mpich2`. When using this option, both the variables `PATH` and `LD_LIBRARY_PATH` must include your MPI implementation. It is also possible to use other MPI libraries based on MPICH2 using the option `-mpipath` *`<path to shared library>`* and `-mpiroot` *`<path to root of mpi library installation>`*. Table 22-17 lists the MPI related options, `-mpi`, `-mpipath`, `-scalapack`, and `-scalapackpath`. Additionally, the COMSOL MPI arguments are configurable inside the

COMSOL start script. To configure COMSOL to work with a job scheduler through the Cluster Computing study, you can set the options

```
-Dcs.precmd=<Command line>
-Dcs.postcmd=<Command line>
```

in the `comsol.ini` file. This adds commands prior to the `comsol` command and after the `comsol` command. You can add `{nn}` or `{perhost}` to any of these pre- or postcommands. This configures the Cluster Computing study to use the number of nodes and number of nodes on each host from the corresponding settings for the Cluster Computing study. For more information, see Cluster Computing.

Troubleshooting Distributed COMSOL and MPI

The following syntax can be used to troubleshoot the MPI environment without running a COMSOL Multiphysics model:

```
comsol [<options>] hydra [<Hydra command>] [<target arguments>]
```

TABLE 22-30: COMSOL HYDRA COMMANDS

COMSOL HYDRA COMMANDS	DESCRIPTION
`cleanup`	Run mpicleanup command
`mpitest`	Run a distributed test program
`tune`	Run mpitune command

Use the `-h` switch for more information about each command, typing, for example, `comsol -h hydra cleanup`.

COMSOL Multiphysics ships with the Intel MPI library but should be compatible with most MPICH2 compatible MPI libraries. To download the latest version of Intel MPI library runtime visit http://software.intel.com/en-us/intel-mpi-library. To run COMSOL Multiphysics with another version of Intel MPI or other MPI library, set `-mpiroot` to the root path of the MPI library. In case the downloaded library is not compatible with the version COMSOL Multiphysics uses (this should usually not be the case), also set `-mpipath` to the dynamically loaded library that should be used. The default of the Intel MPI library is to use `ssh` as communication protocol. If you require another communication protocol, use the option `-mpibootstrap <protocol>`. If you are using a scheduler, the Intel MPI library can often detect the environments it is running in automatically, in which case you may not need to provide additional cluster options in the COMSOL command.

- If you are using a PBS-based scheduler, add `-mpirmk pbs` to the command line in order for Intel MPI to interpret the environment correctly. The Intel MPI library automatically tries to detect the best option for communication and uses InfiniBand if it detects it. To verify that COMSOL is using InfiniBand, check the output from the startup of COMSOL:, it should not mention TCP transfer mode.
- If you have problems running on a Myrinet network, add the options `-mpiarg -mx` to the command line.
- If you have problems running on a Qlogic network, add the options `-mpiarg -psm` to the command line.
- If you have problems running on a Intel network, add the options `-mpiarg -psm2` to the command line

In some cases it helps if you combine the option with the environment variable `PSM_SHAREDCONTEXTS_MAX` set to `1`. You can control the fabrics used for communication with the option `-mpifabrics fabric1:fabric2`, where `fabric1` is equal to `fabric2` or `fabric1` is `shm`.

If COMSOL Multiphysics aborts during start, make sure that all nodes can access the license manager and that COMSOL Multiphysics can be started on each node when not running distributed. Sometimes there is additional information in the log files located in `$HOME/.comsol/v55/configuration/comsol/*.log`. If this does not help, start the MPI test program to make sure that the MPI library is working as it should using the following command:

```
comsol -nn <number of nodes> -f <hostfile> hydra mpitest
```

For more verbose information about the startup process when using Hydra, use `-mpiarg -verbose`, or set `-mpidebug` to a value greater than the default 4.

COMSOL MATLAB COMMAND

Use the COMSOL `matlab` command to access the COMSOL API through MATLAB®. Enter:

```
comsol mphserver matlab [<options>]
```

which launches a COMSOL Multiphysics server in a console window, starts MATLAB, and connects MATLAB to the COMSOL Multiphysics server.

The following options are available for the `comsol mphserver matlab` command:

TABLE 22-31: COMSOL MATLAB OPTIONS

COMSOL MATLAB OPTIONS	DESCRIPTION
`-desktop`	Start with Desktop.
`-graphics`	Start the server with graphics libraries. This enables plotting on the server. Available only when running `comsolmphserver matlab [<options>]`.
`-host <hostname>`	Connect to host.
`-mlnosplash`	Start without MATLAB splash screen.
`-mlroot <path>`	MATLAB installation directory.
`-mlstartdir <path>`	Start in directory path `<path>`.
`-nodesktop`	Start without Desktop.
`-port <hostname>`	Connect to port.

COMSOL Commands on macOS

Use the `comsol` command to start COMSOL products with detailed start-up options.

The general syntax of the COMSOL command is

```
comsol [<target>] [<options>] [<target arguments>]
```

where square brackets indicate optional arguments. The `comsol` command can be combined with optional targets to achieve various results. The following table lists the command and targets:

TABLE 22-32: COMSOL COMMANDS AND TARGETS

COMMAND AND TARGET	DESCRIPTION	AVAILABILITY
`comsol`	Run standalone COMSOL Multiphysics	
`comsol batch`	Run a COMSOL MPH file or class file	
`comsol compile`	Compile a Model Java file	
`comsol doc`	Launch the COMSOL Documentation window	
`comsol mphclient`	Run COMSOL Multiphysics client	
`comsol mphserver`	Start COMSOL Multiphysics server	
`comsol mphserver matlab`	Start MATLAB and connect to a COMSOL Multiphysics server	Requires LiveLink™ *for* MATLAB® license

The `comsol` command is located in the `bin` folder in the COMSOL installation directory.

INI FILES

There is a number of `.ini` files in the `maci64` subdirectory in the `bin` directory. It is sometimes recommended that you edit these files. For example, you can add options to any of the above commands by modifying the corresponding INI file. To change the option `opt` to value `val`, add the line

```
-Dopt=val
```

to the file `comsol.ini`. Change the file `comsolbatch.ini` for `comsol batch`, and similarly for the other COMSOL targets.

OPTIONS

You can enter various options after the COMSOL command and target. Table 22-17 lists the options (see [*<options>*] in the command syntax) available for all comsol commands. Always issue these options between the command and the target (if any).

TABLE 22-33: COMSOL OPTIONS (CURLY BRACKETS INDICATE DEFAULT VALUES)

COMSOL OPTION	DESCRIPTION
<target> -h	Print target-specific help.
-3drend ogl | sw	3D renderer: OpenGL or software rendering.
-alloc {native} | scalable	Memory allocator: Select from using the Macintosh native memory allocator or the scalable memory allocator from the Intel® Threading Building Blocks library.[2]
-applicationsroot *<path>*	Specify custom path to the COMSOL Application Libraries root directory.[1]
-autosave {on} | off	Control saving of recovery files.
-blas {auto} | mkl | blas | path	BLAS library to use.[3]
-blaspath *<path>*	BLAS library path. [3]
-c *<path>*	License file path.
-ckl	Use classkit license.
-clusterstorage all | single | shared	Cluster storage format. The `single` format does I/O only from the root node, while the `shared` format does I/O using distributed I/O operations. The shared format requires that all nodes have access to the same storage area and the same temporary storage area.
-comsolinifile *<path>*	Specify custom path to .ini-file used when starting COMSOL.
-configuration *<path>*	Path to directory for storing the state for the GUI between sessions and for performing different caching tasks. The configuration directory is by default a subdirectory to the preference directory. However, the default location of the configuration directory is not affected by the `-prefsdir` option.
-data	Path to a workspace directory for storing internal workspace information. The workspace directory is by default a subdirectory to the preference directory. However, the default location of the workspace directory is not affected by the `-prefsdir` option. *The workspace directory is cleared when COMSOL is launched.*
-docroot *<path>*	Specify custom path to the COMSOL documentation root directory.[1]
-h	Print general help.
-keeplicenses on | {off}	Keep checked out licenses when creating or opening an application.
-mpmode throughput | turnaround | owner	Multiprocessor mode.[2]
-np *<no. of cores>*	Number of cores.[2]
-prefsdir *<path>*	Preference directory.
-recoverydir *<path>*	Path to recovery directory. The recovery directory is by default a subdirectory to the preference directory.
-tmpdir *<path>*	Temporary file directory. Whitespace is not supported in the file directory path,
-v, -version	Print COMSOL version.

TABLE 22-33: COMSOL OPTIONS (CURLY BRACKETS INDICATE DEFAULT VALUES)

COMSOL OPTION	DESCRIPTION
REFERENCES	

[1] See Documentation and Application Libraries Root Directories.

[2] See Shared-Memory Options.

[3] See BLAS Options.

For the `-tmpdir` option, the COMSOL Multiphysics software uses the specified directory to store temporary files. Use the `-prefsdir` option to specify the directory where the COMSOL Multiphysics software stores the preference file.

Documentation and Application Libraries Root Directories

In a default COMSOL Multiphysics installation, the documentation files are located in the directory `doc` under the installation root directory. You can use the `-docroot` option if you want to move the documentation directory to a different location. Similarly, use the `-applicationsroot` option if you want to move the Application Libraries root directory `applications` from its default location under the COMSOL Multiphysics installation root. Relocating the documentation and Application Libraries root directories can be useful for administering Application Library Update; see The Application Library Update Window.

Setting the paths to the documentation and Application Libraries root directories using these options does not in itself move the directories and their contents.

Shared-Memory Options

Use the option `-np` to control the number of core and processors used. The default is to use all available cores and processors.

Depending on how loaded your machine is, you can control how COMSOL Multiphysics uses the available processors. The following options are available:

TABLE 22-34: COMSOL MULTIPROCESSOR MODE OPTIONS

MPMODE OPTION	DESCRIPTION
`owner`	Provides the highest performance in most cases.
`throughput`	Is expected to give the best performance when several different processes are running actively at the same time as COMSOL.
`turnaround`	Typically provides the best performance when no other processes than COMSOL are active.

Use the option `-alloc` to specify memory allocator type. The default is to use the native memory allocator. The scalable memory allocator can increase performance significantly for computers with many cores but uses more memory.

You can also specify the number of cores and the use of the scalable allocators as preferences on the **Multicore and Cluster Computing** page in the **Preferences** dialog box. To specify the number of cores manually, select the **Number of cores** check box to enter a number in the associated text field. By default, all cores are used. The preference option for the scalable allocator is called **Optimized for multicore**. If you want to choose another memory allocator than the default setting, select the Memory allocator check box and the choose **Native** or **Optimized for multicore**.

Sometimes you might want to experiment to find the options that work best for your configuration.

BLAS Options

BLAS is a set of functions for basic linear algebra operations. A large portion of the computational engine in the COMSOL software relies on BLAS. The COMSOL software provides for the following BLAS-related options:

TABLE 22-35: COMSOL BLAS OPTIONS

BLAS OPTION	DESCRIPTION
auto	The default option is to use the Intel MKL library.
mkl	Use the Intel MKL library (included with installation).
blas	Use the standard BLAS library (included with installation).
path	Use a BLAS library specified using the option `-blaspath` or the environment variable `COMSOL_BLAS_PATH`.

Both MKL and BLAS are distributed with COMSOL Multiphysics.

If you want to use a different BLAS library than the ones provided by COMSOL, make sure that COMSOL Multiphysics can find the library. The simplest way for COMSOL Multiphysics to find a library is to put it in `/lib/win64` or somewhere in the standard search path. Also provide the path to any sublibraries needed by the library. Set the search path to point to the directory where the library is installed. To do so, use the environment variable `PATH`. Your library must support both the standard FORTRAN LAPACK interface and the standard FORTRAN BLAS interface. If your LAPACK and BLAS interface consists of several libraries, use the path to the LAPACK library.

Application Options

The following options are used to specify inputs to an application with command-line options.Find more information about these options in the section *The Application Argument Node* in the *Application Builder Reference Manual*.

TABLE 22-36: COMSOL TARGET COMMAND-LINE ARGUMENTS

COMSOL APPLICATIONS OPTIONS	DESCRIPTION
`-appargnames` *`<names>`*	Comma-separated list of argument names.
`-appargvalues` *`<values>`*	Comma-separated list of argument values.
`-appargsfile` *`<filename>`*	A file with arguments to the application. Each line in the file should have the format `<name>=<value>`.
`-appargvarlist` *`<names>`*	Comma-separated list of argument names whose values are on file.
`-appargfilelist` *`<filenames>`*	Comma-separated list of file names. Each file contains the value for one argument.

COMSOL COMMANDS

In additions to the options in Table 22-17, the standalone COMSOL command supports the following options on macOS:

TABLE 22-37: COMSOL COMMAND-LINE ARGUMENTS

COMSOL OPTIONS	DESCRIPTION
`-open` *`<file>`*	Open application
`-run` *`<file>`*	Run application

COMSOL MULTIPHYSICS SERVER COMMANDS

Use a COMSOL Multiphysics server command to start a COMSOL process ready to process computational requests. A COMSOL Multiphysics server listens for TCP/IP connections from COMSOL Multiphysics clients. A COMSOL Desktop can become a COMSOL Multiphysics client by connecting to a COMSOL Multiphysics server. The LiveLink™ *for* MATLAB® also needs to connect to a COMSOL Multiphysics server.

The syntax for the COMSOL Multiphysics server command is

```
comsol [<options>] mphserver [<target arguments>]
```

The following target arguments are available for a COMSOL Multiphysics server command:

TABLE 22-38: COMSOL MULTIPHYSICS SERVER COMMAND-LINE ARGUMENTS

COMSOL MULTIPHYSICS SERVER OPTIONS	DESCRIPTION
`-graphics`	Start the server with graphics libraries. This displays plots on the server when you are connected with a client (that is, not with the COMSOL Desktop).
`-ipv6`	Make COMSOL Multiphysics server listen on an IPv6 port.
`-login {info}|force|never|auto`	Ask for login information. `info` means that only missing information is asked for. `force` resets the password. `never` requires that the login information is available. `auto` automatically creates a new username and password.
`-multi {auto}|on|off`	Accept repeated client connections.
`-passwd reset|nostore`	Specify that you want to provide a new password. To avoid storing the new password on file use <nostore>.
`-port <port>`	Specify a TCP/IP port to listen for connect attempts.
`-silent`	Do not listen to standard input.
`-passwd reset|nostore`	Specify that you want to provide a new password. To avoid storing the new password on file use <nostore>.
`-user <user>`	Specify login name for a user.

Accessing the COMSOL Multiphysics Server Computer

To access the computer running the COMSOL Multiphysics server, simply log in on the server computer by using `ssh` or a similar command, then enter the `comsol server` command.

Login Information

When you start a COMSOL Multiphysics server for the first time, you are asked for a username and password. Select a username and a password, which the COMSOL software then uses in communications between the COMSOL Multiphysics client and the server. You must also specify a matching username and password on the settings page in the **Model Navigator**, which opens when you start the COMSOL Multiphysics client. The software writes this login information in the file `login.properties`. The login information is located in `Library/Preferences/COMSOL/v55/login.properties` in your home directory.

Client-Server Security Issues

COMSOL can operate in a client-server mode where COMSOL Multiphysics runs as a separate client and a server. COMSOL uses a TCP/IP connection to send data between the server and the client.

> Always make sure that untrusted users cannot access the COMSOL login information. Protect the file `Library/Preferences/COMSOL/v55/login.properties`. This is important when using the COMSOL Multiphysics client-server configuration. Alternatively, start the COMSOL Multiphysics server with the `-passwd nostore` option, and clear the **Remember username and password** check box when connecting to the server. This ensures that your login information is not stored on file.

Once you start a COMSOL Multiphysics server, a person with access to your login information could potentially connect to your COMSOL Multiphysics server. When a COMSOL Multiphysics client connects or disconnects from a remote computer, the COMSOL Multiphysics server displays a message. The connection from the client to the server is made with the TCP protocol.

The server and client are mutually authenticated using a challenge handshake authentication protocol, which means that login information cannot be easily obtained by someone eavesdropping on the network communication. The TCP connection between the client and the server is otherwise not encrypted. If you require encryption of the TCP connection, you can use third-party software based on protocols such as SSH or IPSEC.

To enhance security, you can limit the address range that can access the COMSOL Multiphysics server, both in your firewall and by changing the COMSOL Multiphysics server configuration. To limit the allowed address range in the server, edit the file `<COMSOL Installation Directory>/bin/conf/server.xml` and find the lines:

```
<!-- To restrict access to the COMSOL server you can uncomment the block below.
```

and follow the instructions. The default port for the COMSOL Multiphysics server is 2036. You can change this by using the option `-port <port>` when launching COMSOL and COMSOL Multiphysics server.

Documentation Security Issues

To serve the COMSOL Desktop with documentation, COMSOL opens a separate documentation server on the client computer when you open the documentation.

To enhance security, you can limit the address range that can access the documentation server, both in your firewall and by changing the documentation server configuration. To limit the allowed address range in the server, edit the file `<COMSOL Installation Directory>/doc/help/conf/server.xml` and find the lines:

```
<!-- To restrict access to the documentation server you can uncomment the block below.
```

and follow the instructions. The default port for the documentation server is 8090. You can change this by using the option `-docport <docport>` when launching COMSOL Multiphysics.

COMSOL MULTIPHYSICS CLIENT COMMANDS

Use a COMSOL Multiphysics client command to start a COMSOL Desktop with a the Connect to Server dialog box open.

The syntax for the COMSOL Multiphysics client command is

```
comsol [<options>] mphclient [<target arguments>]
```

The following target arguments are available for a COMSOL Multiphysics client command.

TABLE 22-39: COMSOL TARGET COMMAND-LINE ARGUMENTS

COMSOL MULTIPHYSICS CLIENT OPTIONS	DESCRIPTION
`-open <file>`	Open file
`-port <port>`	Specify a TCP/IP port to connect to
`-server <server name>`	Specify server to connect to

COMSOL BATCH COMMANDS

Use the COMSOL batch command to run COMSOL jobs without a user interface. You can run both Model MPH-files and model files for Java with the COMSOL batch command. Model files for Java need to be compiled before running. The syntax for the COMSOL batch command is

```
comsol [<options>] batch [<target arguments>]
```

Its detailed target arguments are:

TABLE 22-40: COMSOL BATCH-SPECIFIC ARGUMENTS

COMSOL BATCH OPTIONS	DESCRIPTION
`-alivetime <seconds>`	The time between writing status on disc.
`-batchlog <filename>`	File to store log in. If not used, the log appears in the command window.
`-cancel`	Stop the current solver without returning any data. See below.

TABLE 22-40: COMSOL BATCH-SPECIFIC ARGUMENTS

COMSOL BATCH OPTIONS	DESCRIPTION
`-checklicense <filename>`	Print license requirements for a Model MPH-file.
`-clearmesh`	Clear all meshes,
`-clearsol`	Clear all solutions (except probe data),
`-client`	Run as client.
`-continue`	Continue computing an interrupted batch job.
`-dev <filename>`	Path to a JAR-file with additional classes to call from the batch class file.
`-error {on}|off`	Stop if an error occurs.
`-graphics`	Start COMSOL batch with graphics libraries. This displays plots during analysis.
`-host`	Connect to host.
`-inputfile <filename>`	Run a Model MPH-file or class file.
`-job <job tag>`	The batch job to run.
`-mode {batch}|desktop`	Ignore Batch and Cluster Computing settings. See Ignoring Batch and Cluster Computing Settings above.
`-nosave`	Do not save the resulting model.
`-outputfile <filename>`	Save a Model MPH-file using the given filename. If output is not given, the input file is overwritten with the output.
`-paramfile <filename>`	Table file containing parameter names in the first row and corresponding parameter value tuples in the following rows. That is, the parameter names should be on the first row (space separated), and the parameter values (if only one tuple) should be space separated on the second row. If you want to solve for more tuples, more rows are added in the same manner.
`-pindex <parameter indices>`	Comma-separated list of parameter indices (integers). The number of indices given has to correspond to the number of arguments given by `-plist`.
`-plist <parameter value>`	Comma-separated list of parameter values.
`-pname <parameter name>`	Comma-separated list of parameter names.
`-port`	Connect to port.
`-recover`	Recover and continue computation.
`-stop`	Stop the current solver when it has finished, returning available data. See below.
`-study <study tag>`	The study to compute.
`-usebatchlic`	Use batch license (requires batch licenses).

Stopping and Canceling a Batch Job

You can stop a batch job using the following command:

```
comsol batch -stop <level> -inputfile <filename>
```

where `<level>` is the level to stop the process on. Set the level to a high value in order to stop as soon as possible. By default, it is set to 100. The `-inputfile` option indicates the filename of the model that another process is running. The inputfile arguments should be consistent with the one specified to launch another process. That is, either the same inputfile arguments should be provided or the `-inputfile` should be the same as the `-outputfile` specified to launch another process.

You can cancel a batch job using the following command:

```
comsol batch -cancel -inputfile <filename>
```

The `-inputfile` option indicates the filename of the model that another process is running. The inputfile arguments should be consistent with the one specified to launch another process. That is, either the same inputfile

arguments should be provided or the `-inputfile` should be the same as the `-outputfile` specified to launch another process.

Example

To use the COMSOL Multiphysics software in batch mode to solve a model, run the following command:

```
comsol batch -inputfile in.mph -outputfile out.mph -study std1
```

This command starts COMSOL in batch mode, solves the model in the Model MPH-file with the given filename using the active solver settings in the model, and stores the solution in the `out.mph`.

The `-study` option directs COMSOL Multiphysics to run a certain study. The study is identified by its tag. In the COMSOL Desktop, select **Show Name and Tag** under **Model Builder Node Label** to see the tags of the jobs under **Study** within curly braces in the Model Builder. In the model object, determine the tags of the jobs by the command `model.study().tags()`. You can determine the name of each study by `model.study(<tag>).name()` using one of the job tags.

The `-job` option works similar to the `-study` option. It directs COMSOL Multiphysics to start a certain job. The job is identified by its tag. In the model object, determine the tags of the jobs by the command `model.batch().tags()`. You can determine the name of each job by `model.batch(<tag>).name()` using one of the job tags.

The `-usebatchlic` option makes COMSOL use batch licenses for the job. This option is equivalent to the **Use batch license** check box available in the **Cluster Computing** and **Cluster Sweep** study nodes. Using batch licenses for a cluster computing or cluster sweep job means that you can continue working in the COMSOL Desktop while the job is running using only a single FNL license.

For the `-recover` option, the working directory (where all .log, and .status files are generated) will contain the recovery file, which contains information about the recovery folder in the case that the COMSOL software stops working. If the `-recover` option is specified, the model from the recovery directory will be opened. If opening that model succeeds, a continue operation will be performed; otherwise, the input filename model will be simulated.

THE COMSOL COMPILE COMMAND

The `comsol compile` command compiles a model file for Java for use by the COMSOL batch command or for loading class files into the GUI. With COMSOL Compiler, you can also use it to compile COMSOL applications into standalone executable applications. The macOS syntax for the COMSOL compile command is

```
comsol [<options>] compile [<target arguments>] <file>.java
```

The Java file is mandatory. The following optional target arguments are available‘

TABLE 22-41: COMSOL COMPILE OPTIONS

COMSOL COMPILE OPTIONS	DESCRIPTION
`-classpathadd <classpath>`	Additional classpath
`-jdkroot <path>`	Path to the JDK root
`-verbose`	Verbose output

To compile an application in an MPH-file into a standalone executable application using COMSOL Compiler, use

```
comsol compile <full path to MPH-file> [<compile arguments>]
```

Compiling applications requires a license for COMSOL Compiler™.

The following arguments are available:

TABLE 22-42: COMSOL COMPILE ARGUMENTS FOR COMPILING APPLICATIONS

COMSOL COMPILE ARGUMENTS	DESCRIPTION
`-icon <path>`	Path to image file for application icon.
`-libraries cad,weatherdata`	Optional data to include. Specify as a comma-separated list. CAD data is only applicable with the CAD Import Module or CAD LiveLink products. Weather data is only applicable with the Heat Transfer Module.
`-outputdir <path>`	Specify where the compiled application should be saved. The default is the directory where the application's MPH-file is located.
`-platforms windows,linux,macos`	The platforms to compile for. Specify as a comma-separated list. The default is the platform where the compiler is run.
`-runtime default` | `ask` | `<path>`	Specify where to store the runtime when running the application. The `default` option is the platform's default location. The `ask` option asks the user for the location of the runtime when running the application. The `<path>` option provides a location where the runtime should be unpacked and stored. Only specify a path when compiling for a single platform.
`-runtimewindows <path>`	Specify where the runtime should be unpacked on Windows.
`-runtimelinux <path>`	Specify where the runtime should be unpacked on Linux.
`-runtimemacOS <path>`	Specify where the runtime should be unpacked on macOS.
`-splash <path>`	Path to image file for splash screen.

Options not given are taken from the application's **Compiler** node, except for `-outputdir` and `-platforms`.

COMSOL MATLAB COMMAND

Use the COMSOL MATLAB command to access the COMSOL API through MATLAB. Type:

```
comsol mphserver matlab [<options>]
```

which launches a COMSOL Multiphysics server in a console window, starts MATLAB, and connects MATLAB to the COMSOL Multiphysics server.

The following options are available for the `comsol mphserver matlab` command:

TABLE 22-43: COMSOL MATLAB OPTIONS

COMSOL MATLAB OPTIONS	DESCRIPTION
`-desktop`	Start with Desktop.
`-graphics`	Start the server with graphics libraries. This enables plotting on the server. Available only when running `comsolmphserver matlab [<options>]`.
`-host <hostname>`	Connect to host.
`-mlnosplash`	Start without MATLAB splash screen.
`-mlroot <path>`	MATLAB installation directory.
`-mlstartdir <path>`	Start in directory path <path>.
`-nodesktop`	Start without Desktop.
`-port <hostname>`	Connect to port.

23

Glossary

This Glossary of Terms contains terms related to finite element modeling, mathematics, geometry, and CAD as they relate to the COMSOL Multiphysics® software and documentation. For more application-specific terms, see the glossaries in the documentation for most of the add-on modules. For references to further information about a term, see the index.

Glossary of Terms

adaptive mesh refinement A method of improving solution accuracy by adapting the mesh to the problem's physical behavior.

affine transformations Geometric transformations that are combinations of linear transformations and translations.

algebraic multigrid (AMG) An *algebraic multigrid* solver or preconditioner that performs one or more cycles of a multigrid method using a coarsening of the discretization based on the coefficient matrix. Compare to *geometric multigrid (GMG)*.

anisotropy Variation of material properties with direction.

application program interface (API) An *API* provides a set of documented functions and methods for interacting with a software product.

arbitrary Lagrangian-Eulerian formulation (ALE formulation) A formulation where an Eulerian equation is transformed into an equation written with respect to a mesh, which can be moving in relation to both the Eulerian frame and the Lagrangian frame. The COMSOL Multiphysics solvers have built-in support for the necessary transformation of derivatives.

arc A segment of the circumference of a circle or ellipse.

Argyris element A 2D, 6-node triangular finite element with a 5th-order *basis function* providing continuous derivatives between elements.

aspect ratio The ratio between the longest and shortest element or geometry dimension.

assemble Taking the local element stiffnesses, masses, loads, and constraints to form the *stiffness matrix*, *mass matrix*, load vector, constraint matrix, and constraint residual vector.

associative geometry An algorithm that maps data associated with a geometry to the new *geometric entities* when the geometry is modified.

backward differentiation formula (BDF) A multistep formula based on numerical differentiation for solutions to *ordinary differential equations*. A BDF method of order n computes the solution using an nth-grade polynomial in terms of backward differences.

basis function A function φ_i in the *finite element space* such that the ith degree of freedom is 1, while all other degrees of freedom are 0. For the Lagrange finite element space, φ_i is a linear or higher-order polynomial on each mesh element with value 1 in node i and 0 in all other nodes.

BEM See *Galerkin boundary element method*.

Bernstein polynomial See *Bézier basis*.

Bézier basis A set of polynomial functions that occur in the definition of a *Bézier curve*. These polynomial functions are often called *Bernstein polynomials*.

Bézier curve A *rational Bézier curve* is a parameterized *curve* formed as the quotient of two polynomials expressed in the Bézier basis. It is a vector-valued function of one variable. The coefficients of a rational Bézier curve

are geometrically interpreted as *control points* and *control weights*. A *nonrational Bézier curve* is a rational Bézier curve with all weights equal, thereby making the denominator polynomial equal to a constant. A nonrational Bézier curve is also called an *integer Bézier curve*.

Bézier patch, Bézier surface A *Bézier patch* or *Bézier surface* is a surface extension of a *Bézier curve*. A *Bézier patch* is a function of two variables with an array of control points.

bidirectional constraint A constraint enforced by reaction terms affecting both equations in a constraint of the type $u_1 = u_2$. *Symmetric constraints* are an important special case. See also *reaction terms* and *constraint*.

Boolean operations Boolean operations are used to construct a *geometry object* from other geometry objects. At least two primary geometry objects are required to create a resultant new geometry object. That new object depends on the type of Boolean operation:

- Union (add): the resultant geometry object occupies all the space of the initial geometry objects.
- Difference (subtract): the resultant geometry object occupies all the space of the first geometry object except for the space inside the second geometry object.
- Intersection: the resultant geometry object occupies only the space common to the initial geometry objects.

boundary A *geometric entity* with a dimension one less than the space dimension for the geometry (a *face* in a 3D geometry, an *edge* in a 2D geometry, and a *vertex* in a 1D geometry). In a mathematical context, the symbol $\partial\Omega$ represents the boundary of the domain Ω. Sometimes *boundary* is used in a narrower sense meaning an *exterior boundary*. See also *interior boundary*, *exterior boundary*.

boundary element method See *Galerkin boundary element method*.

boundary modeling A geometry modeling method to create a geometry by defining its boundaries. Compare to *solid modeling* and *surface modeling*.

brick element See *hexahedral element*.

chamfer A CAD operation that trims off a corner with a plane or straight line.

Cholesky factorization A memory-saving version of *LU factorization* where U is the transpose of L. It requires that the coefficient matrix A ($A = LU$) be a symmetric positive definite matrix. See also *LU factorization* and *positive definiteness*.

coefficient form PDE A PDE in the coefficient form is a PDE formulation suited for linear PDEs.

$$\begin{cases} e_a \dfrac{\partial^2 u}{\partial t^2} + d_a \dfrac{\partial u}{\partial t} + \nabla \cdot (-c\nabla u - \alpha u + \gamma) + \beta \cdot \nabla u + au = f & \text{in } \Omega \\ \mathbf{n} \cdot (c\nabla u + \alpha u - \gamma) + qu = g - h^T \mu & \text{on } \partial\Omega \\ hu = r & \text{on } \partial\Omega \end{cases}$$

component coupling See *nonlocal coupling*.

composite geometry object Geometric objects made up by combining *primitive geometry objects* and other composite objects. See also *constructive solid geometry*, *primitive geometry object*, and *Boolean operations*.

COMSOL Application Server For each application launched from a *COMSOL Server* ™ installation, a separate COMSOL Application Server process is started to run the application. A COMSOL Application Server process contains functionality that is similar to a *COMSOL Multiphysics Server* together with functionality to generate the application's user interface accessed from a web browser or a *COMSOL Client*.

COMSOL Client A Windows® client that runs an implementation of a COMSOL application, created with the Application Builder, and that connects to a *COMSOL Server*™.

COMSOL Desktop The COMSOL Desktop® is an integrated simulation environment for the COMSOL products with a number of windows such as the Model Builder window, the Graphics window, and each model tree node's Settings window.

COMSOL binary file A binary data file with the extension `.mphbin` that contains geometry objects or mesh objects.

COMSOL text file A text data file with the extension `.mphtxt` that contains geometry objects or mesh objects.

COMSOL Multiphysics server The COMSOL Multiphysics server is a single user server allowing multiple sessions of the same user, one session at a time.

COMSOL Server A COMSOL Server™ license make it possible to deploy and run COMSOL applications in major web browsers. Using the Windows® operating system, you can also run COMSOL applications by connecting to a COMSOL Server with an COMSOL Client.

condition number A measure of the possible error in a solution due to ill-conditioning of the equations. See also *ill-conditioning*.

constant A named model property that has a constant numeric value. The built-in constants in COMSOL Multiphysics include *mathematical and numerical constants* and *physical constants*.

constraint Restriction imposed upon the dependent variables on the form $R(u_1,u_2,...) = 0$. A *Dirichlet boundary condition* is a special case. *Neumann boundary conditions* are not regarded as constraints. When a constraint is added, the finite element algorithm adds corresponding *reaction terms* to the system of equations. These generalized *reaction forces* modify the *flux conditions* so that the resulting model becomes solvable.

constructive solid geometry (CSG) A solid-modeling method that combines simple solid shapes, or *primitives*, to build more complex models using Boolean operations. See also *solid modeling* and *primitive*.

contributing node A boundary condition or source is *contributing* when it adds to other boundary conditions or sources defined on the same geometric entity. Examples of contributing boundary conditions are loads in structural mechanics and heat flux components in heat transfer. See also *exclusive nodes*.

control point *Bézier* and *NURBS* curves and surfaces are defined by a set of points known as *control points*. The locations of these points control the curve's shape.

control weight Scalar values assigned to *control points* to further control the shape of a curve or surface.

contour plot A plot that shows the variation of a solution component or other quantity. Points with equal values of the plotted quantity are connected with contour lines.

convergence The tendency for a finite element solution to approach the exact solution within well-defined and specified tolerances, for example, by reducing the mesh element size or the time step.

Costabel FEM-BEM coupling A symmetric coupling method for combining finite elements and boundary elements, where the coupling to the finite elements makes it possible to solve problems where the coefficients of the differential operator are not constant.

curl element See *vector element*.

curve The path of a point moving through space. See also *Bézier curve*, *NURBS*, and *manifold*.

curve object A geometry object consisting of only *edges* and *vertices* (where no vertex is isolated), for example, a geometry object representing a *curve*.

curve segment An individual polynomial or rational polynomial curve. Compounded curves consist of several *curve segments*.

curved mesh element See *mesh element*.

degree of freedom (DOF) One of the unknowns in a discretized finite element model. A degree of freedom is defined by a name and a *node point*. The degree of freedom names often coincide with the names of the dependent variables. The local degrees of freedom are all degrees of freedom whose node points are in one mesh element.

deformed geometry A geometry where the shape changes with a moving-mesh algorithm. It is also the name of a *physics interface* for modeling deforming geometries. This is similar to the Parameterized Geometry interface in earlier versions of COMSOL Multiphysics.

deformation gradient In solid mechanics, it contains the complete information about the local straining and rotation of the material. It is a nonsingular matrix with positive determinant, as long as material cannot be annihilated.

dependent variable A varying quantity whose changes are arbitrary but regarded as produced by changes in other variables on which the varying quantity depends. For example, temperature is a function of the spatial coordinates and time. In a narrower sense, the dependent variables, or *solution components*, are the unknowns in a mathematical PDE model. Compare to *independent variable*.

differential-algebraic equation (DAE) A set of equations that includes both differential and algebraic equations. A DAE is classified in terms of its *index*, a positive integer, which is related to the minimum number of differentiations needed to transform a DAE to an ODE form.

direct solver A solver for a system of linear equations that uses some variant of Gaussian elimination. Compare to *iterative solver*.

Dirichlet boundary condition A Dirichlet boundary condition specifies the value of the function (dependent variable) on a boundary. Dirichlet boundary conditions are sometimes called *essential boundary conditions* or *constraints*. See also *constraint*.

discretization The process of dividing a continuous system into a finite number of elements with finite size. The difference between the finite-element representation and the real system, the discretization error, drops as the size of the elements decreases. For a time-dependent analysis, a discretization of time into steps provides an idealized behavior of the variations in the solution during these steps.

divergence element A finite element with properties suitable for representing certain electromagnetic vector fields. The degrees of freedom on the boundary of a mesh element correspond to normal components of the field.

domain A topological part of the modeling space in a geometry model. The geometric representation of a domain is a line segment (interval) in 1D, an area in 2D, and a volume in 3D. In a mathematical context, the symbol Ω represents the domain where the equations are defined.

domain decomposition Domain decomposition is a solver method that divides the modeling domain into subdomains where the equations in the subdomains are easier to solve. The total solution is then obtained by iterating between the computed solutions for each subdomain using the currently known solutions from the other subdomains as boundary conditions.

drop tolerance A nonnegative scalar used in the incomplete LU preconditioner for the iterative solvers. See *incomplete LU factorization*.

dynamic model See *time-dependent model*.

edge, edge segment A *geometric entity* representing a bounded part of a *curve*. An *edge* or *edge segment* is a *boundary* in a 2D geometry. See also *domain*.

edge element See *vector element*.

eigenvalue PDE A PDE that describes an eigenvalue problem with unknown eigenmodes (eigenfunctions) u and eigenvalues λ. The *coefficient form* eigenvalue PDE is:

$$\lambda^2 e_a u - \lambda d_a u + \nabla \cdot (-c\nabla u - \alpha u) + \beta \cdot \nabla u + au = 0$$

elliptic PDE A linear stationary second-order elliptic PDE has the form

$$\nabla \cdot (-c\nabla u - \alpha u + \gamma) + \beta \cdot \nabla u + au = f$$

where c is positive or negative definite (for example, Poisson's equation).

embed To insert a 2D geometry into a 3D geometry model.

error Deviations from the correct solution, primarily due to: poor modeling; *discretization* (such as insufficiently fine mesh, poor elements, or insufficiently short time steps); and roundoff and truncation (depending on numerical representation, *ill-conditioning*, or the solution algorithms).

error estimate An estimation of the error in the numeric solution to a problem, either locally or globally, primarily for use by an adaptive mesh refinement. See also *adaptive mesh refinement*, *error*.

equivalent boundaries *Boundaries* that are rigid transformations of each other and have compatible meshes. See also *periodic boundary condition*.

essential boundary condition See *Dirichlet boundary condition*.

Eulerian formulation An Eulerian formulation means that the partial differential equations that describe some physics are formulated in a *spatial frame* (coordinate system), with coordinate axes fixed in space. An Eulerian formulation is common for fluid flow when the focus is on specific locations in space through which fluid flows. Compare to *Lagrangian formulation*.

exclusive node A boundary condition or material model in a domain is *exclusive* when there can only be one such node defined for a given geometric entity. Adding another exclusive boundary condition to the same boundary, for example, the last added boundary condition (last in the Model Builder tree) overrides any other similar boundary

condition defined on the same boundary. Examples of exclusive boundary conditions are prescribed displacements in structural mechanics and specified temperature in heat transfer. See also *contributing node*.

extended mesh A data structure that includes the full finite element mesh. See also *mesh*, *node point*.

extended multiphysics A model that includes nonlocal couplings and dependencies between variables, where the value at a point is the result of a computation elsewhere in the domain or in another geometry defined in the same model. *Coupling operators* provide the ability to project or extrude values from one geometry or domain to another. Compare to *multiphysics*.

exterior boundary An *exterior boundary* for a dependent variable u is a *boundary* such that u is defined only on one of the adjacent domains, that is, a boundary to the computational domain. See also *boundary*.

extrude To create a 3D geometry object from a 2D geometry object in a *work plane* or a planar face in 3D by translating (extruding) it in the normal direction.

extrusion nonlocal coupling A coupling defined in the destination that takes values from the source by interpolation at points that depend on the position of the evaluation points in the destination.

face A *geometric entity* describing a bounded part of a *surface* in a 3D geometry. A *face* is a *boundary* in a 3D geometry. See also *domain*.

fallback feature Used with the pair node to enable pairs to have the option to add additional subnodes with conditions for nonoverlapping parts of the pair.

FEM See *finite element method*.

Fick's law The first law relates the concentration gradients to the diffusive flux of a solute infinitely diluted in a solvent. The second law introduces the first law into a differential material balance for the solute.

field variables Dependent variables and variables derived from them, defined as fields — functions of x, y, z, and t in a general time-dependent 3D case.

fillet A curved transition from one boundary to another, creating a rounded corner.

finalized geometry The resulting geometry used for assigning materials and physics. COMSOL Multiphysics creates the finalized geometry by forming a union of the entire *geometry sequence* or by forming an assembly where the geometry objects in the geometry sequence are treated as individual parts. The finalized geometry consists of *geometric entities*.

finite element In the mathematical sense, a *mesh element* together with a set of *shape functions* and corresponding *degrees of freedom*. The linear combinations of the shape functions form a space of functions called the *finite element space*. In the traditional FEA sense, the concept of a finite element also includes the discretized form of the PDEs that govern the physics. COMSOL generally uses *finite element* in the mathematical sense.

finite element analysis (FEA) A computer-based analysis method for field problems using the *finite element method*.

finite element method (FEM) A computational method that subdivides an object into very small but finite-size elements. The physics of one element is approximately described by a finite number of *degrees of freedom (DOFs)*. Each element is assigned a set of characteristic equations (describing physical properties, boundary conditions, and imposed forces), which are then solved as a set of simultaneous equations to predict the object's behavior.

finite element space The linear space of functions where the finite element approximation to the solution of a PDE problem is sought. The functions in the finite element space are linear combinations of *basis functions* (*shape functions*).

finite volume method (FVM) A computation method that, in ways similar to the *finite element method*, computes values at discrete places on a meshed geometry. Finite volume refers to the small volume surrounding each node point in a mesh.

finite void A finite volume in the geometry that is not defined as a solid domain and that cannot contain a volumetric finite element mesh; only physics interfaces based on the *boundary element method* can be active in finite voids.

flux condition A boundary condition that specifies the value of the *normal flux* across a boundary, also known as a *natural boundary condition*. A (generalized) *Neumann boundary condition* is a special case.

flux vector The general flux vector is as below, with three terms: the first term describes diffusion, the second term describes convection with a velocity $-\alpha$, and the third term γ is a source term. See also *generalized Neumann boundary condition* and *normal flux*.

$$\Gamma = -c\nabla u - \alpha u + \gamma$$

frame A *frame* is a coordinate system that is fixed in space, to a material, to the geometry, or to a mesh. The frames make it possible to use an *Eulerian formulation* or a *Lagrangian formulation* for various physics in a model or using the arbitrary Lagrangian-Eulerian (ALE) method. The following frame types are available: *material frame* (*reference frame*), *geometry frame*, *mesh frame*, and *spatial frame*.

free mesh An *unstructured mesh* that can represent any geometry. Compare to *mapped mesh*.

free mesher The mesh generator creating *free meshes*. The mesh generator creating *triangular elements* is also referred to as the *free triangle mesher*, and the mesh generator creating *quadrilateral elements* is also referred to as the *free quad mesher*.

free quad mesher The mesh generator creating unstructured quadrilateral meshes.

free tet mesher The mesh generator creating unstructured tetrahedral meshes.

free triangle mesher The mesh generator creating unstructured triangular meshes.

function COMSOL Multiphysics supports *user-defined functions*, which can be analytic, piecewise, and interpolation functions as well as special types of common functions that implement, for example, steps, ramps, and other wave forms. There are also common built-in *mathematical functions* such as trigonometric functions, logarithms, and special functions.

Gauss point A *Gauss point* is an integration point in the special case of numerical integration using Gaussian quadrature. Sometimes, *Gauss point* is improperly used as a synonym for *integration point*. See also *integration point*.

Galerkin boundary element method A variant (the Galerkin method) of the method for solving linear partial differential equations that have been formulated as integral equations (the boundary element method) in which the integrals over the source and field patches are the same.

general form PDE A PDE in the general form is a PDE formulation suited for nonlinear PDEs:

$$\begin{cases} e_a \dfrac{\partial^2 u}{\partial t^2} + d_a \dfrac{\partial u}{\partial t} + \nabla \cdot \Gamma = F & \text{in } \Omega \\ -\mathbf{n} \cdot \Gamma = G + \left(\dfrac{\partial R}{\partial u}\right)^T \mu & \text{on } \partial\Omega \\ 0 = R & \text{on } \partial\Omega \end{cases}$$

generalized Neumann boundary condition A generalized Neumann boundary condition (also called a *mixed boundary condition* or a *Robin boundary condition*) specifies the value of a linear combination of the *normal flux* and the *dependent variables* on a boundary. For a coefficient form PDE, the generalized Neumann boundary condition is

$$\mathbf{n} \cdot (c\nabla u + \alpha u - \gamma) + qu = g - h^T \mu$$

The generalized Neumann condition is often called just *Neumann condition* in the documentation.

generalized reaction force see *reaction term*.

geometric entities The basic parts that constitute the finalized geometry: In 3D, they are divided into the following four types or *geometric entity levels*: *domains*, *boundaries* (*faces*), *edges*, and *points* (*vertices*). In 2D, there are no *faces*, and the *edges* are the *boundaries*. In 1D, there are only *domains* and *points*, which are also the *boundaries*.

geometric entity level The *geometric entity levels* are the *vertex*, *edge*, *face*, and *domain* levels (in 3D). An entity of dimension one less than the space dimension is referred to as a *boundary*. See also *geometric entities*.

geometric multigrid (GMG) A *geometric multigrid* solver or preconditioner performs one or more cycles of a multigrid method, using a coarsening of the discretization based on a coarsening of the mesh or a reduction in the order of the shape functions. Compare to *algebraic multigrid (AMG)*.

geometry frame In the geometry frame (coordinate system), the domain is fixed and identical to the original geometry. No physics is formulated directly in the geometry frame — only the *material frame* and *spatial frame* have physical significance. The geometry frame is used only as a reference for the Deformed Geometry interface and for postprocessing. When there is no Deformed Geometry interface present, the geometry frame is identical to the material frame.

geometry model A collection of *geometric entities* that form a complete geometric description of the model.

geometry object An object generated by a geometry feature. See also *point object*, *curve object*, *surface object*, *primitive geometry object*, *solid object*, and *mixed object*.

geometry sequence The sequence of geometry features that define a geometry (of a model component) plus other settings that define the geometry. In the Model Builder, this is represented by the Geometry node and its child nodes.

grid A *grid* usually refers to sets of evenly-spaced parallel lines at particular angles to each other in a plane, or the intersections of such lines. Compare to *mesh*.

Hermite element A finite element similar to the *Lagrange element*. The difference is that there are degrees of freedom for the (first-order) space derivatives at the mesh vertices. See also *Lagrange element*.

hexahedral element A 3D mesh element with eight corners and six faces, also referred to as *brick element*; sometimes also called *hex element* as a short form.

higher-order element A finite element with *basis functions* that consists of polynomials of degree 2 or higher.

hybrid geometry modeling Creating a geometry model using a combination of *boundary modeling/surface modeling* and *solid modeling*.

hyperbolic PDE A typical example of a linear second-order hyperbolic PDEs is the *wave equation*

$$e_a \frac{\partial^2 u}{\partial t^2} + \nabla \cdot (-c\nabla u - \alpha u + \gamma) + \beta \cdot \nabla u + au = f$$

where e_a and c are positive.

IGES file An *IGES file* contains 3D CAD data, including the 3D geometry, in an open format according to the *Initial Graphics Exchange Specification*. IGES files can be imported into COMSOL Multiphysics using the CAD Import Module.

ill-conditioning An ill-conditioned system is sensitive to small changes in the inputs and is susceptible to roundoff errors. See also *condition number*.

imprint An imprint of the usually smaller boundary on the larger boundary that makes the parts in a *pair* match. An imprint inserts points on the boundary in 2D and creates edges on the boundary in 3D.

incomplete LU factorization An approximate *LU factorization* where small matrix elements are discarded to save memory and computation time. The *drop tolerance* is a relative measure of the smallness of the elements that should be discarded. See also *LU factorization*.

independent variable A variable that can cause variation in a second, *dependent variable*. The independent variables are most often spatial coordinates and time. Compare to *dependent variable*.

index, for DAE See *differential-algebraic equation*.

infinite void A single unbounded region, surrounding the geometry, that cannot contain a volumetric finite element mesh; only physics interfaces based on the *boundary element method* can be active in an infinite void.

initial condition The starting values for the dependent variables in a time-dependent analysis and for *nonlinear iterations* or other iterative solvers.

integration nonlocal coupling A coupling that evaluates integrals of expressions over the source and returns a single scalar value when used in the destination, which for this type of nonlocal coupling is the entire model. Similar functionality is available to evaluate the average, minimum, and maximum values.

integration order The order (a positive integer) in a *numerical integration formula* where evaluation points and weights are chosen such that result of the numerical integration is exact for all expressions that are polynomials of an order that is no higher than the specified *integration order*.

integration point See *numerical integration formula*.

interactive meshing Building a mesh in an incremental fashion where each meshing operation acts on a set of geometry domains.

interior boundary An *interior boundary* for a dependent variable u is a *boundary* such that u is defined on both adjacent domains or in no adjacent domain. See also *boundary*.

interval The domain between two vertices (points) in a 1D geometry. Also called a *domain*.

inverted curved element An *inverted curved element* occurs when a *curved mesh element* inverts locally when more node points are added to better approximate the shape of the geometry. There are many possible geometrical causes, but the element is often too large compared to the geometry feature size.

isoparametric element A finite element that uses the same *shape function* for the element shape coordinates as for the *dependent variables*.

isosceles triangle A triangle with at least two equal sides (and two equal angles).

iteration See *iterative solver*.

iterative solver A solver for a system of linear equations that uses an iterative method, calculating a sequence of more and more accurate approximations to the solution. Each step in this sequence is one *linear iteration*. This should not be confused with the Newtons iterations (*nonlinear iterations*) that occur in the solution of a nonlinear system of equations. Compare to *direct solver* and *nonlinear iteration*.

Jacobian matrix A matrix containing the first derivative of a vector-valued function of a vector variable. In particular, it is the derivative of the *residual vector* with respect to the *solution vector*. When used in this narrower sense, the term *stiffness matrix* is sometimes used.

Lagrange element A *finite element* with polynomial shape functions of a certain *order* (degree). The value of the function is used as the *degree of freedom*, and the node points are the *Lagrange points*.

Lagrange multiplier An extra dependent variable introduced in the *flux conditions* when a constraint is added. The Lagrange multiplier often has a physical meaning and an interpretation as a (generalized) *reaction force*. See also *constraint*.

Lagrange point In a mesh element, the *Lagrange points* of order k are the points whose local (element) coordinates are integer multiples of $1/k$. These points are used as node points for the *Lagrange element*. For example, the Lagrange points of order 1 are the corners of the mesh element.

Lagrangian formulation A Lagrangian formulation means that the partial differential equations that describe some physics are formulated in a *material frame* (coordinate system) with coordinate axes fixed to the material in its reference configuration and following the material as it deforms. The Lagrangian formulation is common for solid mechanics because it makes anisotropic material properties independent of the current spatial orientation of the material. Compare to *Eulerian formulation*.

linear iteration A step in a linear iterative solver. See *iterative solver*. Compare to *nonlinear iteration*.

linear PDE An equation where both sides are sums of a known function, the unknown functions, and their partial derivatives, multiplied by known coefficients that only depend on the *independent variables*. Other PDEs are called *nonlinear*.

LU factorization For a linear system of equations, a version of Gaussian elimination that produces a factorization $A = LU$ of the coefficient matrix, where L and U are the lower and upper triangular matrices, respectively. This makes it easy to quickly solve a number of systems with the same coefficient matrix. See also *direct solver*.

mapped mesh A *structured mesh* with *quadrilateral elements* generated by mapping using transfinite interpolation.

mapped mesher The mesh generator creating *mapped meshes*.

mass matrix The matrix $\boldsymbol{E}$ that multiplies the second time derivative of the *solution vector* in the linearized discretized form of a PDE problem. If there are no second time derivatives (that is, if $\boldsymbol{E} = 0$), then the term mass matrix is often used for the matrix $\boldsymbol{D}$ that multiplies the first derivative of the solution vector (the $\boldsymbol{D}$ matrix is otherwise called the *damping matrix*).

material frame The material frame defines a coordinate system that is fixed to the material in its reference configuration and follows the material as it deforms. The material frame is used in connection with a *Lagrangian formulation*. This frame is also referred to as a *reference frame*.

mathematical and numerical constants Built-in common mathematical constants such as π and i and numerical constants such as the machine precision or machine epsilon.

mesh A subdivision of the entities of a geometric model into, for example, triangles (2D) or tetrahedra (3D). These are examples of *mesh elements*. See also *grid*, *structured mesh*, and *unstructured mesh*.

mesh element The individual elements in the mesh that together form a partitioning of the geometry, for example, *triangular elements* and *tetrahedral elements*. See also *finite element*. A *curved mesh element* is a mesh element that is extended with additional node points to better approximate the shape of the geometry.

mesh frame In the mesh frame (coordinate system), the domain is fixed until an automatic or manual remeshing operation is performed, as well as between remeshing events. When remeshing is not used, the mesh frame is identical to the *geometry frame*.

mesh vertex An endpoint or corner of a mesh element. See also *node point* and *vertex*.

meshing sequence The sequence of meshing features that define a mesh. In the Model Builder, this is represented by the Mesh node and its child nodes.

method of lines A method for solving a time-dependent PDE through a space discretization, resulting in a set of ODEs.

mixed boundary condition See *generalized Neumann boundary condition*.

mixed object A nonempty *geometry objec*t that is not a *solid object*, *surface object*, *curve object*, or *point object*. For example, the union of a solid object and a curve object is a mixed object.

mode reduction A model-reduction technique for reducing systems with many degrees of freedom, such as large finite element models, to a form with fewer degrees of freedom for dynamic system simulations and analysis. See also *state-space model*.

model coupling See *nonlocal coupling*.

model input *Model inputs* are fields such as temperature and velocities or other physical properties that act as inputs for material properties and model equations. The model inputs can be fields computed by other physics interfaces or user-defined values.

model file for Java A file that contains Java® commands calling on the COMSOL *API*. Use a text editor to extend and modify the model file. Compiling and running a model file for Java creates the COMSOL Multiphysics model.

model file for MATLAB A text file containing commands that create a COMSOL Multiphysics model. A model file for MATLAB is a text file (M-file) that is similar to a *model file for Java* and that can be modified and used with MATLAB. If you have a MATLAB license and a license for LiveLink™ *for* MATLAB®, the COMSOL Desktop can load a model file for MATLAB. Compare with *Model MPH-file*.

Model MPH-file A binary data file with the extension `.mph` that contains a COMSOL Multiphysics model or application. Often also just called model file or application file.

model object An object (data structure) that contains all data for a model. This is the fundamental data structure in a COMSOL Multiphysics model.

Model Wizard Part of the COMSOL Desktop that is used to start building a model. It contains the Select Space Dimension, Select Physics, and Select Study Type pages.

MRI data *Magnet resonance imaging (MRI) data* is an image data format, primarily for medical use. MRI produces high-quality images of the inside of the human body. 3D MRI data is usually represented as a sequence of 2D images.

multigrid A solver or preconditioner for a linear system of equations that computes a sequence of increasingly accurate approximations of the solution by using a hierarchy of coarsened versions of the linear system (having fewer degrees of freedom). See also *algebraic multigrid*, *geometric multigrid*.

multiphysics Multiphysics models include more than one equation and variable from different types of physics. These variables can be defined in different domains. The equations can be coupled together through equation coefficients that depend on variables from other equations. Compare to *extended multiphysics*.

natural boundary condition See *Neumann boundary condition*.

Neumann boundary condition A Neumann boundary condition specifies the value of the *normal flux* across a boundary. Neumann boundary conditions are sometimes called *natural boundary conditions*. Compare to *generalized Neumann conditions*.

Newton's method An iterative solver method, also called the *Newton-Raphson method*, for solving nonlinear equations. See also *nonlinear iterations*.

Newton-Raphson method See *Newton's method*.

node point Any point in the mesh element where the degrees of freedom are defined. The node points often include the mesh vertices and possibly interior or midpoint locations. See also *degree of freedom* (DOF) and *mesh vertex*.

nonlinear iteration A Newton step in the solution of a nonlinear PDE problem. Each nonlinear iteration involves the solution of a linear system of equations. Compare to *linear iteration*.

nonlinear PDE See *linear PDE*.

nonlocal coupling User-defined nonlocal couplings are used to couple data within a model component (geometry) or between different model components (geometries). See also *extrusion nonlocal coupling*, *projection nonlocal coupling*, and *integration nonlocal coupling*. Nonlocal couplings can be reused with different arguments (for example, for integrating different quantities over the same domain).

norm A scalar measure of the magnitude of a vector or a matrix. Several types of norms are used to measure the accuracy of numerical solutions.

numerical integration formula A numerical integration method that approximates an integral by taking the weighted sum of the integrand evaluated at a finite number of points, the *integration points* (sometimes improperly called *Gauss points*). Also called *quadrature formula*.

normal flux The normal component of the *flux vector* at a boundary.

NURBS The *nonuniform rational B-spline (NURBS)* is a curve and surface representation scheme. A NURBS representation can be divided into a number of *rational Bézier curves* or surfaces.

online model reduction In the context of model reduction, *online* refers to using the reduced order for evaluations rather than producing them.

operator, operator function A user-defined *operator function*, or just *operator*, is similar to a *function* but behaves differently. For example, COMSOL Multiphysics includes differentiation operators that take expressions as input arguments to define a derivative of an expression with respect to a variable. There are also built-in arithmetic, relational, and logical operators.

order of a finite element The degree of the polynomials that define the *shape functions* (*basis functions*).

ordinary differential equation (ODE) An equation involving functions and their derivatives. The derivatives are with respect to one independent variable only. Compare to *partial differential equation (PDE)*.

parabolic PDE A typical example of a linear 2nd-order parabolic PDE is the *heat equation*

$$d_a\frac{\partial u}{\partial t} + \nabla \cdot (-c\nabla u - \alpha u + \gamma) + \beta \cdot \nabla u + au = f$$

where d_a and c are positive.

parameter A constant that can take on different values for each model in a parametric analysis. See also *constant*.

partial differential equation (PDE) An equation involving functions and their partial derivatives; that is, an equation that includes derivatives with respect to more than one independent variable. Compare to *ordinary differential equation (ODE)*.

periodic boundary condition A boundary condition where the values of the solution appear in a periodic pattern, typically so that the value of the solution on one boundary is equal to the value on another boundary. See also *equivalent boundaries*.

phasor A complex number or a vector of complex numbers representing a sinusoidally varying current or voltage.

physical quantity A quantity (quantifiable property) that can be used in the mathematical equations of science and technology.

physics interfaces Sets of physics nodes for different types of physics in the COMSOL Desktop environment. The physics interfaces (sometimes referred to as the *physics*) contain predefined equations and boundary conditions and a set of nodes for setting up models for that type of physics.

pivot Usually a value on the main diagonal of the *stiffness matrix*. *Pivoting* is the interchanging of rows and columns in order to place a particularly large element in the diagonal position. The value of the diagonal element when it is used to eliminate values below it is called the *pivot value*.

point A location in space. Often used in a narrower sense with the same meaning as *vertex*.

point object A geometry object with only *vertices*.

positive definiteness A symmetric matrix is *positive definite* when all its eigenvalues are positive.

preconditioner The convergence rate of iterative methods depends on the spectral properties of the coefficient matrix. A *preconditioner* is a matrix that transforms the linear system into one that has the same solution but that has more favorable spectral properties. See also *algebraic multigrid*, *geometric multigrid*, *incomplete LU factorization*, *iterative solver*, and *SSOR*.

preselection A selection of one or more geometric entities, such as domains or boundaries, that is not assigned to a physics feature or any other node in the model tree. Such a preselection can then be assigned to, for example, a physics feature that you add to the model tree.

primitive, primitive geometry object A geometry object with a basic shape such as a cube or a sphere. Add primitives to a model, using arbitrary sizes and positions, and combine them to form complex shapes. See also *constructive solid geometry*, *composite geometry object*, and *Boolean operations*.

prism element A 3D mesh element with six corners and five faces, also referred to as *wedge element*.

projection nonlocal coupling A coupling that takes values from the source by evaluating line integrals over lines whose positions are dependent on the position of the evaluation points in the destination.

quadrature formula See *numerical integration formula*.

quadrilateral element A 2D mesh element with four corners and four edges; sometimes also called *quad element* as a short form.

rational Bézier curve See *Bézier curve*.

reaction force see *reaction term*.

reaction term Terms that are automatically added to the system of equations in order to enforce a *constraint*. Reaction terms from boundary constraints appear as a *flux condition* and share the same physical meaning. Using an analogy from structural mechanics, reaction terms are sometimes referred to as (generalized) reaction forces.

reference frame See *material frame*.

residual vector The vector L in the discretized form of a PDE problem. In the absence of *constraints*, the discrete form of a stationary equation is $0 = L(U)$ where U is the *solution vector*.

revolve To create a 3D geometry object from a planar face by rotating it about an axis.

Robin boundary condition See *generalized Neumann boundary condition*.

shape function A *basis function* described in local element coordinates. See also *basis function*.

shift A value σ around which an eigensolver searches for eigenvalues.

simplex element *Triangle element* in 2D and *tetrahedral element* in 3D.

solid See *solid object*.

solid modeling A 3D geometry modeling method that describes both the boundary and interior of the geometry using solid objects. See also *constructive solid geometry (CSG)* and *solid object*.

solid object A geometry object whose *vertices*, *edges*, and *faces* all have an adjacent *domain*.

solution component See *dependent variable*.

solution matrix A matrix that contains a sequence of solutions as columns. A steady-state problem results in a *solution vector*, but eigenvalue problems, time-dependent problems, and parametric analyses produce a *solution matrix*.

solution vector A vector with components that contain all the *degrees of freedom* (values of the *dependent variables*) as its components. See also *solution matrix*.

solver sequence A sequence of named solver settings and commands that can be replayed by a single solver call.

sparse matrix Matrix for which the number of zero elements is large enough to justify special data types and algorithms that avoid operations on zero elements.

spatial frame The spatial frame defines a coordinate system with coordinate axes fixed in space. The spatial frame (also called the Eulerian frame) is used in connection with a *Eulerian formulation*.

split To divide a geometry object into its minimal parts.

stability A solver for a time-dependent model is *unconditionally stable* if the initial conditions are not amplified artificially and the roundoff errors do not grow, regardless of the size of the time step. A solver is *conditionally stable* if there is a maximum value of the time step above which the numerical solution is unstable.

state-space model A linear time-invariant representation of a dynamic system as a set of first-order *ODEs* of the form

$$\begin{aligned} \dot{x} &= Ax + Bu \\ y &= Cx + Du \end{aligned}$$

where x is the state vector, u is the input, and y is the output. A, B, C, and D are the constant dynamics, input, output, and direct transmission matrices, respectively.

static model See *stationary model*.

stationary model A model where the dependent variables do not change over time. It typically represents a steady-state solution. Also called *static model* or *steady model*.

steady model See *stationary model*.

stiffness matrix See *Jacobian matrix*.

streakline The locus of particles that have earlier passed through a prescribed point in space. See also *streamline*.

streamline A curve that is tangent to the vector field everywhere (in particular a velocity field) at a given instant of time. Sometimes called a *flow line* or *flux line*. See also *streakline*.

streamline-diffusion stabilization A numerical technique for stabilization of the numeric solution to a PDE by artificially adding diffusion in the direction of the *streamlines*.

strong form A partial differential equation in the *strong form* is the standard formulation as an equality of functions. The strong form is divided into the *coefficient form* and the *general form*. Compare to *coefficient form*, *general form*, and *weak form*.

structured mesh A mesh for which all elements and nodes have the same topology. Compare to *unstructured mesh*.

surface A smooth mathematical function from 2D to 3D space.

surface normal A vector perpendicular to the surface.

surface modeling A 3D geometry modeling method to describe a geometry by defining its bounding surfaces. Compare to *boundary modeling* and *solid modeling*.

surface object A geometry object without domains, isolated edges, or isolated vertices. Typically a trimmed surface is represented as a surface object.

swept mesh A 3D mesh generated by sweeping a face mesh along a domain.

symmetric matrix A matrix that equals its own transpose.

symmetric successive overrelaxation (SSOR) A *symmetric successive overrelaxation (SSOR)* preconditioner uses classic SSOR iterations.

symmetry The invariance of an object attribute or of the object itself under a transformation such as inversion, rotation, or reflection. A *symmetry* allows for a reduction of the model geometry so that appropriate boundary conditions account for the redundant portions of the geometry. Axial symmetry is a common type of *symmetry*.

symmetric constraint A *constraint* that is enforced by *reaction terms* chosen so as to preserve the symmetry of symmetric unconstrained systems. This choice of reaction terms is unique and leads to a *bidirectional constraint* that modifies the equations corresponding to all dependent variables appearing in the constrained expression.

symmetry boundaries See *equivalent boundaries*.

test function See *weak form*.

tetrahedral element A 3D mesh element with four corners, six edges, and four triangular faces.

time-dependent model See *transient model*.

transient model A model where at least one of the dependent variables changes over time, for example, the heat equation or the wave equation. Also called *dynamic model*, *time-dependent model*, or *unsteady model*.

triangular element A 2D mesh element with three corners and three edges.

trimmed surface If the parameter space of a surface is divided into "valid" and "invalid" regions, the image of the valid regions is called the *trimmed surface*. This corresponds to the part of the surface limited by a closed loop of edges lying on the surface.

unidirectional constraint A constraint enforced by *reaction terms* that only affect one of the dependent variables in a constraint of type $u_1 = u_2$. The other dependent variables are treated as independent with respect to the unidirectional constraint. Compare to *symmetric constraint*. See also *constraint*.

unstructured mesh A mesh without a specific pattern where the elements can have different shapes and the nodes can have different connectivities. Compare to *structured mesh*.

unsteady model See *time-dependent model*.

user-defined variable A user-defined variable can be defined on a global level or on any geometric entity in terms of *dependent variables*, *independent variables*, *parameters*, *constants*, and other *variables*.

vector element A finite element often used for electromagnetic vector fields. Each mesh element has degrees of freedom corresponding only to tangential components of the field. Also called *curl element*, *Nédélec's edge element*, or just *edge element*.

vertex A point in a geometry model, often an endpoint of an edge or an intersection of *geometric entities* of a higher degree such as *edges* or *faces*. A vertex is referred to as a *point* for the specification of point sources and other PDE modeling. See also *domain*.

weak constraint A reformulation of a *constraint* as a *weak form* equation. When using a weak constraint, the corresponding *Lagrange multiplier* becomes a *solution component* (*dependent variable*).

weak form A partial differential equation in the *weak form* is a more general formulation than the strong form. It is produced by multiplying the *strong form* PDE with an arbitrary function called the *test function* and integrating over the computational domain. Physics interfaces in COMSOL Multiphysics are implemented using a weak form. Compare to *strong form*.

wedge element See *prism element*.

well-posed A well-posed mathematical problem has a unique solution and depends continuously on its input, such as initial conditions, source terms, and boundary conditions.

work plane An embedded 2D work space that can be positioned relative to the coordinate planes or an already existing 3D geometry. Using *work planes* makes it possible to define a geometry in terms of previously created geometry objects such as *points*, *edges*, and *faces*. From a work plane with a 2D geometry, 3D geometry objects can be created using *extrude* or *revolve* operations.

Index

0D spatial dimension 106
1D models, solving 476
1D plot group (node) 1501
1D view (node) 457
2D axisymmetry
  particle tracing with mass theory 1540
2D plot group (node) 1507, 1553
2D view (node) 457
3D mesh files 555
3D models
  guidelines for solving 477
  infinite elements, and 394
3D plot group (node) 1507
3Dconnexion 3D mouse 435
3MF files 555
3MF files, exporting for 3D plots 1586
3MF files, importing 680

A aberration evaluation (node) 1481
about COMSOL Multiphysics 49
absolute IPS systems 82
absolute pressure 908, 937
absolute tolerances, solvers and 1292
absorbing layer (node) 395
absorbing layers 395
  filter parameters for 1045
absorption term 1000
AC impedance studies 1404
AC impedance, initial values (node) 1217
AC impedance, stationary (node) 1217
AC impedance, time dependent (node) 1218
ACA+ and ACA algorithms 1033
accumulated probe table 1484
accurate fluxes, variables 1016
Acoustics Module 825
Acoustics Module (operators) 281
Adams-Bashforth method 1051
Adams-Bashforth method, theory 1265
adapt (mesh node) 636
adaptation 1173
adaptive frequency sweep (node) 1196
adaptive mesh refinement (attribute node) 1321
adaptive mesh refinement (utility node) 1379
adaptive method (node) 1079
adaptive solvers 1303
add expression (button) 1414
add material (window) 699
add physics (window) 96
add study (window) 1151
add to selection (button) 421
Add-in Libraries window 172
adding 173
  arrays, example 607
  extrusions, example 602
  geometry, example 596, 598
  material properties 708
  mesh sequences 623
  model geometry 483
  model inputs 708
  nodes 154
  objects to Boolean operations 550
  physics interfaces 106
  polygon segments 503
  rotations, example 598, 603
  source terms 1024
  study nodes 1151
  user application library 85
  user part library 499
  variable expressions to plots 1414
  variable utilities 262
  variables 260
additive Schwarz solver 1336
adj operator 276
adjacent (node) 442
adjacent geometry objects 409
adjacent selection (node), geometry 450
adjoint methods 1316
adjoint sensitivity 1092–1093
adsorption 875
advanced (node), solvers 1324
advanced section, frames 102
advanced settings 101
  pseudo time stepping 102
affine transformations 537
ALE method 1103
  limitations of 1112
algebraic equation (node) 1068
algebraic error 1184
algebraic multigrid preconditioners and solvers 1312
align with work plane (button) 583
alpha blending 461
ambient light 463
AMG. See algebraic multigrid solvers.
Ampère's law (node) 816, 818
AMS solver 1327

analysis cases 1178
analysis, sensitivity 1367
analytic (node), functions 319
analytic functions, materials and 746
Anand viscoplasticity (material node) 736
Anderson acceleration
  for fully coupled solver 1347, 1366
angle, for complex-valued solution 1468
angular unit, for geometry 484
animation (node) 1576
anisotropic (material node) 733
anisotropic material 999
anisotropic materials 781
  ALE, and 1103
  coordinate systems, and 360
  full matrix 195
  modeling 195
  properties 708
anisotropic strength parameters, Voigt notation (node) 735
anisotropic, Voigt notation (material node) 733
annotation (node) 1511
antialiasing
  for image snapshots 1615, 1617
  for printing 1614
  plot images 1585
appearance, of icons 163
appending data to a file 1581, 1583, 1587
Application Gallery 88
Application Libraries
  root directory, Linux 1658
  root directory, macOS 1671
  root directory, Windows 1643
application libraries
  files with no stored solution 76
  MPH-file types in 76
application libraries (window) 84
application libraries window
  compact files 85
  preview files 85
  tree-node icons 85
application library example
  absorbing layers 396
application library examples
  acpr interface 830
  analytic functions 319
  average coupling operator 357
  batch study 1198
  boundary and domain probes 379
  boundary coordinate systems 364
boundary layers mesh 640
cluster commands 1653
cluster sweep study 1202
contact impedance 810
contact pairs 376
convection and diffusion 863
curvilinear coordinates 1078
cut line 3D dataset 1445, 1448
cut plane datasets 1446
cut point datasets 1447
deformed geometry 1125
discretization node 1060
domain point probes and point probes 381
electric currents 804
electrostatics 793
event interface 1069
function datasets 1450
Gaussian pulse functions 321
general extrusion coupling operator 352
global variable probes 381
global variables 261
harmonic perturbation 1221, 1404
identity mapping coupling operator 354
identity pairs 375
infinite element domains 394
integral and average evaluation datasets 1444
integration coupling operator 356
interpolation functions 328
Joule heating 929
laminar flow 907
line average derived values 1475
line integration 1476
linear extrusion coupling operator 352
local variables 261
magnetic fields 815
mapped mesh 655
maximum and minimum coupling operators 357
migration in electric field 863
mirror data sets 1455
multiphysics 193
parameterized curve data sets 1456
parametric extrusion data sets 1457
PDEs 1014
perfectly matched layers 391
periodic boundary condition 208
piecewise functions 330
plane wave radiation 834
PMLs 391
pressure acoustics, frequency domain 830
rotated coordinate systems 369

selecting physics interfaces and variables in study steps 1182
sensitivity 1098
solid mechanics 972
surface integration 1476
swept mesh 664, 684
tables 1474
transport of diluted species 860
volume integration 1476
volume maximum derived values 1477, 1531
waveform functions 332
Application Library Update 90
applications
comparing 173
applications, behavior when starting 81
applying reaction terms 1011
arbitrary Lagrangian-Eulerian formulation. See ALE
Argyris elements 1137
Armstrong-Frederick (material node) 735
Arnoldi method 1261
ARPACK 1261
array (node) 539
array 1D (node)
data set 1442
array 2D (node)
data set 1442
array 3d (node) (data set) 1442
arrays (node), reports 1596
arrays and ranges 305
arrow line (node) 1513
arrow point (node) 1514
arrow surface (node) 1514
arrow volume (node) 1514
Arruda-Boyce (material node) 738
Arruda-Boyce (node) 738
artificial diffusion, convergence and 183
artificial diffusion, stabilization and 222
artificial viscosity, stabilization and 222
aspect ratio, in 1D 1503, 1506
assemble (node) 1379
assembly
reusing sparsity pattern 1326
assembly object 492
associated Legendre polynomials 309
associative geometry 476
asymptotic waveform evaluation 1265
asymptotic waveform evaluation. See AWE
at operator 276
at operator, spatial 288
at1 and at2 operators 288
atenti operator 280
atlocal operator 276
atonly operator 276
attach job (button) 1250
attached dimensions (node) 1084
attimemax operator 276
attimemin operator 276
attribute nodes 1151
attribute nodes, solvers 1151, 1296
atxd operator 276
aurora color tables 1424
author, include in history 78
automatic rebuild, geometry 486
automatic remeshing 1113, 1188
automatic remeshing (node) 1328
auxiliary dependent variable (node) 103, 1055
Auxiliary-Space Maxwell (AMS) (node) 1327
auxiliary-space Maxwell solver 1327
average (node)
component coupling 357
data set 1444
average coupling operators 346
average values, on boundaries 304
average, data series operation 1434
average, time-dependent expression 290
AVI file format 1576
AWE solver 1194, 1239
AWE solver (node) 1266
AWE solver algorithm 1265
axial symmetry
boundary conditions 157, 204
cylindrical coordinates 477
axial symmetry (node) 836
axis
number formatting 1504, 1507
axis (node)
1D and 1D axisymmetric 459
2D and 2D axisymmetric 458
axis limits, locking 458
axis orientation indicator 429
axis units 458
axisymmetric geometries
PDE formulation in 991
spatial coordinates for 298
axisymmetric models
cylindrical coordinate systems, and 478
physics interfaces, and 98
axisymmetric plots
revolution data sets, and 1465
azimuth axis

of spherical coordinate system 370

B background color, for 3D graphics 1646
backslash, displaying 1419
backward differentiation formulas, theory 1258
backward Euler method 285
ball (node)
meshes 674
selections 442
ball operators 277
ball selection (node), geometry 451
ball, geometry node 531
band-pass filtering 331
bar chart 1520
Barcelona basic (material node) 737
base vector system (node) 361
basis functions 1130
Basquin (material node) 739
batch (node)
job configurations 1389
study types 1197
batch command
for Linux 1662
for macOS 1674
for Windows 1648
in COMSOL 1623
batch data (node) 1399
batch jobs 1624
batch jobs (button) 1250
batch jobs, directories for 1390
batch jobs, synchronizing with GUI 1200
batch settings 1199, 1203
batch sweep (node) 1198
batch sweep, uses for 1156
batteries and fuel cells materials 763
bdf operator 278
BDF solvers, generalized alpha and 1260
beam width 1547
BEM, vs. FEM 1030
Bernstein basis 504
Bézier curves
cubic 510
quadratic 529
Bézier polygon (node) 503
BH curve (material node) 726
bibliography (node), reports 1594
BiCGStab iterative method 1350
bidirectionally coupled particle tracing (node), study 1200
bidirectionally coupled ray tracing (node), study 1201
bioheat materials 764
bioheat transfer interface 920
Blackman window 1275
blank material 692
blank model, creating 105
BLAS libraries
for Windows 1645, 1659, 1672
weak form PDE, and 1050
BLAS libraries in COMSOL 1635
Blatz-Ko (material node) 738
Blinn-Phong lighting model 706
BLIS libraries in COMSOL 1635
block (node) 505
BMP format 1585
bndenv operator 281
body load (node)
solid mechanics 980
Boolean
expressions 282
geometry selections 455
selections 447
Boolean and partition
operation features 536
Boolean and partitions menu
compose 541
difference 549
intersection 558
partition 563
partition domains 564
partition edges 566
partition faces 567
union 576
borrowing licenses 247
boundaries
detection of 681
boundary
definition 408
elements, meshes 617
boundary absorption term 1001
boundary conditions
axial symmetry 204
definition 201
electromagnetics theory 781
for nonoverlapping pair parts 372
heat equation, and 958
identity pairs 372
wall distance interface 1072
boundary current source (node) 808
boundary element method 1030, 1037
boundary element refinement 1559, 1563
boundary elements

PDE for 1031
boundary flux operators 278
boundary fluxes, variables 1016
boundary heat flux variables 955
boundary heat source (node) 941
boundary heat source variable 956
boundary integral equation 1039
boundary layer properties (node) 640
boundary layers (node) 639
boundary layers, meshes 620
boundary load (node) 981
boundary load, flux condition 201
boundary mode analysis (node) 1215
boundary nodes
deformed geometry 1126
electric currents 804
electrostatics 793
magnetic fields 815
moving mesh 1115–1116, 1122
pressure acoustics, frequency domain 830
solid mechanics 972
transport of diluted species 861
boundary partitioning information, transferring 670
boundary point probe (node) 381
boundary point probes 377
boundary probe (node) 379
boundary selection 102
boundary similarity (node) 352
boundary source term 1001
boundary stress (node) 913
boundary system (node) 363
boundary-value problems 1064
box (node)
meshes 675
selections 444
box selection (node), geometry 451
branches, in the Model Builder 147
British engineering unit systems 82
special units in 232
British thermal units 231
bubble element 1139
buckling analysis 1223
build all (button)
meshes 624
build all objects (button)
geometry 489
build preceding (button), geometry 489
build selected (button)
geometry 487
meshes 623
building
expressions 257
models 105
building materials 764
built-in materials database 693
built-in variables 306
bulk modulus
elastic moduli 975
pressure acoustics 827
bulk modulus (material node) 734
Bunch-Kaufman pivoting 1332

C

Calderon identities 1040
calling geometry parts 495, 625
camera (node) 461
camera, locking 461
cancel all processes (button) 1250
cancel process (button) 1250
canceling solvers 1244
Cartesian coordinate systems
2D geometry, and 476
definition 360
variables 298
case (node) 260
Cash-Karp 5 time-stepping method 1286
cell contents, copying 1473
center of mass 313
center of rotation 462
centroid operator 278
CFL number
settings 906
solving 1256
wave PDE 1050
CGSA unit systems 81
special units in 232
Chaboche (node) 735
Chaboche viscoplasticity (material node) 736
chamfer (node) 540
change cross-section (node) 801, 934, 963
change of state, analysis cases 163
change thickness (node) 963
heat transfer interface 934
solid mechanics 974
change thickness (out-of-plane) (node) 802
change, indicator variable for 1061
changing. see editing
charge conservation (node) 795
charge conservation, piezoelectric (node) 802
charge relaxation theory 784
check mark definition, materials 705

Chemical Reaction Engineering Module 785
chirality 516
circle (node) 506
circle operators 277
circular arc (node) 507
circular cone 509
circumcenter operator 279
circumferential wave number 838
cividis color table 1424
clamped spline 520
classes through reflection 1625
classical PDEs 995
clear selection (button) 421
clear status (button) 1250
clearing meshes and solutions 178
click and hide (button) 434
client/server
  security issues, Windows 1647
client-server
  architecture 1622
  configuration for COMSOL Multiphysics 1629
  preferences for 1631
  security issues, Linux 1661
  security issues, macOS 1673
  security issues, Windows 1647, 1661, 1674
client-server security 1661
clipboard
  copying images 1614
  copying plot data to 1487
  copying table data to 1473
closing windows 62
cluster computing (node)
  job configuration 1392
  study 1202
cluster jobs
  Linux 1638
  Windows 1637
cluster settings 1360
cluster storage formats 1154
cluster sweep (node) 1206
cluster sweeps
  running 1638
clusters 1633
  license handling for 1639
  parallel mode 1623
  storage formats for 1639
coarse grid correction 1312
coarse solver (node) 1329
Coble (material node) 736
code (node), reports 1594
coefficient form PDE (node) 1022
coefficient form PDE interface 1017
coefficient form, solving 1252
coefficient of thermal expansion
  for non-SI units 724
Coffin-Manson (material node) 739
coil geometry analysis (node) 1216
collapse all (button) 73
collapse edges (node) 587
collapse face regions (node) 588
collapse faces (node) 587
collapse, model tree 61
color (button) 1614
color banding 1514
color expression (node) 1571
color legends
  displaying 429
  number formatting 1509
  position of 1509
  showing 1509
color palette 1426
color scales, settings for 1509
color tables 1423
  adding custom 1424
coloring gradient 1426
colors of materials 705
column headers, in tables 1485
combinations of parameters 1177
combine solutions (node) 1157
combined system (node) 365
comet tail plots 1429
comments, adding to models 242
comments, in interpolation data files 324
common settings 101
communication ports 1662
compact files
  application libraries window 85
compact models, downloading 88
compact MPH-files 76
compact notation, classical PDEs 995
comparing models 173
comparing solutions
  using at operator 276
  using Join data sets 1452
  using with operator 291
compile equations (node) 1381
compile equations, global equations and 1066
complement (node) 447
complement selection (node), geometry 455
complex number

polar display 1473
rectangular display 1473
complex shifted Laplace contribution 1306
complex shifted Laplacian 1320
complex variables, splitting 1016, 1381
complex-valued data 295, 1566
complex-valued output 1326
complex-valued problems 1253
componens
adding physics interfaces to 96
component (node) 142
component branch 147
component name 293
component variables 300
components
copying 143
inserting 143
space dimensions of 106
switching to another 144
compose (node) 541
composite curves 483
composite edges and faces 590
composite object (node) 535
composite solid objects 474
composite system (node) 365
composition 698
computation time 80, 85
compute differential
check box 1435
example of 1437
compute from selected 1240
compute nodes, clusters and 1633
compute selected step 1240
compute to selected 1240
computing hosts 1633
COMSOL Application Libraries
set root directory 86, 173
updating 90
COMSOL batch
Linux 1662
macOS 1674
Windows 1648
COMSOL batch feature 1623
COMSOL commands
Linux 1655
Macintosh 1669
Windows 1641
COMSOL Desktop
client/server architecture, and 1629
connecting to a server 1630
disconnecting from a server 1630
help window 43
languages for 241
layout 58
menus and toolbars 68
quick access toolbar 70
reconnecting to a server 1631
windows 66
COMSOL Java API 1624
COMSOL license number 50
COMSOL MATLAB command
Linux 1669
macOS 1677
Windows 1655
COMSOL Multiphysics
about 49
file formats 76
license agreement 50
license number 50
mesh import, and 680
patents 50
server, accessing 1646
server, Linux 1660
server, macOS 1673
COMSOL Multiphysics server
starting 1629
COMSOL Part Libraries 497
updating 92
COMSOL Server 1682
concentration 937
concentration (node) 866
conduction loss (time-harmonic) (node) 795
conductive heat flux variable 954
conductive heat flux vector 958
cone (node) 509
cone, geometry 512
conforming meshes 617
conic sections 504
conical frustum 509
conjugate gradients solver 1307
conjugate gradients, iterative solver 207, 1350
conjugate heat transfer (settings) 927
connecting
COMSOL to a server 1630
MATLAB to a server 1631
conservative convective flux
for two-variable PDE 999
normal component of 1001
conservative flux
source term 999

conservative flux source
normal component of 1001
consistent stabilization
methods 222
settings 219
consistent stabilization (settings) 921
consistent stabilization method 961
consistent stabilization settings 103
constants
as predefined variables 272
mathematical 270
numerical 270
constants, built-in 307
constitutive relations theory 779–780
constraint (node) 1025
constraint elimination 1299
constraint force Jacobian 1008
constraint group (node) 216
constraint groups 164, 214
constraint methods
elemental 206, 1057
nodal 206, 1057
pointwise constraints 205
weak constraints 205
constraint settings 102
constraint-handling method 1299
constraints
defined 201
editing 196
equation view 198
general form PDE, and 992
on time derivatives 1012
settings for nodes 205
structural mechanics 185
switching off 202
constraints, Galerkin 946
contact impedance (node) 809
contact pair (node) 375
contact pairs 372
container nodes 150
context help 43
context menus 154, 157
context-based help 43
contextual toolbar 70
continuation solver 1257
continuation, reusing solutions for 1170
continue solving 1244
continuity (node) 103, 942
interior boundaries 203
pressure acoustics, frequency domain 836
continuous tangent, when selecting 443, 445
contour (node)
data sets 1444
plots 1514
contour plots 1514
contour types 1515
contours, level labels and 1515
contributing nodes 159
contribution
global 1093
integral 1093
listing 160
control field (node) 1329
control points 504
control state (node) 1330
control variable field (node) 1098
controlling frames 1182
convection 850
convection term
for two-variable PDE 1000
convection-diffusion equation (node) 1024
convective cooling, flux condition 201
convective heat flux variable, cflux 954
convective terms, diluted species 844
convergence
copying data 1245
discontinuous functions, and 333
generating plots 1153
keeping plots 1245
modeling practices 183
plots 1245
tests 183
convergence plot settings (button) 1245
convert (node), meshes 641
convert to curve (node) 542
convert to point (node) 543
convert to solid (node) 544–545
convert to surface (node) 545–546
converting units 235
convolution integrals 280, 356
Cook-Torrance lighting model 706
coordinate system line (node) 1515
coordinate system settings 102
coordinate system settings (node) 1082
coordinate system surface (node) 1515
coordinate system volume (node) 1515
coordinate systems
absolute 360
base vector 361
boundary 363

Cartesian 360
combined 365
composite 365
cylindrical 366
for vector plots 1416
from geometry 371
mapped 367
physics symbols, and 165
relative 360
rotated 367
scaling 369
spherical 370
user defined 360
coordinate-based selections 449
coordinates, displaying 482
coordinates, for location of mesh problem 488, 633
copy (button) 73
copy (node) 646
copy (node), geometry 546
copy domain (node) 642–643
copy edge (node) 644
copy face (node) 645
copy solution (node) 1381
copy solutions 1381
copy, of solution 1154
copying
convergence data 1245
geometric entities 441
geometry objects 487
mesh solutions 1114
models 78
nodes 175
screenshots to clipboard 1614
selections 421
tables in results 1473
user-defined material libraries 743
cores, number of 1644, 1658
corner refinement (node) 642
Costabel's symmetric coupling 1041
Coulomb gauge 790
coupling operators
average 346
boundary similarity 352
general extrusion 351
integration 346
linear extrusion 352
maximum 346
minimum 346
coupling physics 180
create custom solver 1154
create domains (node), meshes 675
create edges (node), meshes 676
create faces (node), meshes 677
create plot (button)
functions 317
plots 1486, 1492
create shortcut (button) 151
create vertices (node), meshes 677
creating
2D geometry models 595
3D geometries 582
3D geometry models 600
composite geometry objects 536
cross-section plots 1493
default plots 1486
deformed meshes 1114
geometries 475, 502
materials libraries 742
memory efficient geometry 182
meshes 616
multiphysics models 188
selections 421
smooth functions 333
user-defined selections 440, 446, 453
user-defined views 457
variables 260
work planes, example 605
cross section (node), geometry 547
cross sectional area 921
cross sectional perimeter 921
cross-platform graphical user interface 1622
cross-section plots
creating 1493, 1498
cut plane data sets 1500
cut point data sets for 1495
data sets and plot groups, deleting 1495
data sets for 1439
line 2D 1497
line 3D 1498
line plots 1497
point 1495
surface 1500
toolbar 1493
crosswind diffusion
consistent stabilization method 219
definition 224, 961
heat transfer, and 961
crosswind diffusion, consistent stabilization method 961
CSS files, for reports 1591
cubic Bézier curve 504

cubic Hermite spline, for interpolation 1187
cubic splines 326
cumulative selections 456
curl 990
curl elements
element types
curl elements 1139
curl-curl operators
preconditioners for 1310
SOR vector, and 1369
current conservation (node) 806
current distribution initialization (study step node) 1219
current node
geometry 488
meshes 616
current source (node) 807
current sources, theory 785
currentiter, variable 304
curvature factor 659
curve
inflection point for 505
quadratic 504
third-degree 504
curved mesh elements 1131
curvilinear coordinate systems 1077
curvilinear coordinates interface 1077
custom color tables 1424
custom colors 1426
custom icon
part library folder 499
user application library folder 85, 173
customizing plot titles 1417
cut line (node), 2D and 3D 1445
cut line data sets 1497
cut plane (node) 1445
cut plane data sets 1500
cut planes 1493
cut point (node), 1D, 2D, and 3D 1446
cut point data sets 1495
cutoff window 1274
cyclic color tables 1423
cyclic voltammetry (node) 1218
cylinder (node)
geometry 511
meshes 677
selections 444
cylinder selection (node), geometry 452
cylindrical system (node) 366
cylindrical system, PDE for 991
cylindrical wave radiation (node) 834

D

Damköhler number 224
damped Newton method 1254
damping
solid mechanics 976
damping (node)
solid mechanics 976
damping factors 1254
damping ratio matrix 1264
damping ratios 1262–1263
damping term 998
Dang Van (material node) 740
Darcy velocity 850
Darveaux (material node) 739
data (node) 1580
data export, duplicates and 1575
data sets
array 1d 1442
array 2d 1442
array 3d 1442
average 1444
contour 1444
cut line 1445
cut plane 1445
cut point 1446
defining 1439
edge 2D and 3D 1447
extrusion 1448
isosurface 1452
join 1452
maximum and minimum evaluation 1454
mesh 1455
mirror 1455
parameterized curve 1456
parameterized surface 1456
parametric extrusion 1457
particle 1458
particle bin 1458
ray bin 1460
receiver 1460
response spectrum 2D and 3D 1461
revolution 1465
selections, adding 1439
solution 1468
subbranch 148
surface 1468
time average 1469
time integral 1469
data sets (node) 1439
datasets
filter 1448

grid 1449
integral 1444
ray 1459
date, in plot titles 1418
decimal notation 1473
default
color tables, changing 1426
component name 145
component name, extra dimensions 147
coordinate system variables 478
Desktop layout 59
desktop settings 240
fonts 241
initial values 196
Model Builder nodes 144
physics nodes 157
plots, creating 1486
plots, generating 1240
quality settings 1432
solver 1154
solvers, showing 1637
unit systems 226
user name and password 1630
views 429
default model inputs (node) 263
defining
cross-section plots 1493
data sets 1439
derived values and tables 1470
functions 317
global parameters 259
isotropic materials 975
parameters 259
plots 1486
definitions (node), local 256
definitions subbranch, local 147
definitions toolbar 113
deformation (node) 1571
deformed configuration (node) 548
deformed configurations, remeshing 1114
deformed geometry interface 1125
deformed mesh interfaces 1102
degeneracies, in geometry 475
degree, Bézier curve and 504
degrees of freedom 1130
Delaunay algorithms 652–653
delete (button) 73
delete entities 549
delete entities (node), meshes 678
deleting
geometric entities 549
geometry sequences 178, 489
interior boundaries, example 599
nodes 178
physics interfaces 178
recovery files 79
restoring a material library 745
solver configurations 1154
solvers 178, 1154
tables 1473
undoing 177
DEM data 319
dense matrix solver 1331
definition 1301
density element 1145
dependent variables
entering initial values 196
reviewing 97, 107
shape functions 197
dependent variables (node) 1269
dependent variables (settings) 922
depends operators 280
derivative recovery 1432
derived value (node) 1399–1400
derived values
global evaluations 1478
global matrix evaluations 1478
point evaluation 1477
point matrix evaluations 1480
subbranch 148
volume, surface, and line averages 1475
volume, surface, and line integration 1476
volume, surface, and line maximum and minimum 1476
descriptions, for physics interface variables 197
deselecting using a rubberband box 425
desktop layout, changing 240
dest operator 280
destination maps 347
destination selection (node) 103, 1029
destination, for component couplings 345
detaching windows 63
details, removing from geometry 593
developer toolbar 134
diagonal components, materials 195
dielectric losses (material node) 726
dielectrics and perfect conductors 782
difference (node)
geometry 549
selections 447
difference selection (node), geometry 455

differentiation operators 279
diffuse light 463
diffusion method (node), curvilinear coordinates 1078
diffusive flux
  for two-variable PDEs 998
  normal component 1000
DIN number 698
dipole source (node) 832
dipole sources 827
direct (node) 1330
direct preconditioner (node) 1334
direct solvers
  as preconditioner 1334
  dense matrix 1301
  MUMPS 1300
  PARDISO 1300
  SPOOLES 1300
directional light
  converting headlight to 468
directional light (node) 464
directivity plots 1516
directories, for batch jobs 1390
Dirichlet boundary condition 201
  for two-variable PDE 1000
Dirichlet boundary condition (node) 1025
  PDE, boundary elements 1035
Dirichlet conditions 207
disable in model (button) 1181
disable in solver, analysis case 163
disable in solvers (button) 1181
disabling
  geometric entities 549
disco color tables 1424
disconnected pairs, splitting 493
disconnecting
  COMSOL from a server 1630
discontinuous functions 333
discontinuous functions, convergence 333
discontinuous Galerkin
  FEM, and 990
  time-explicit solvers 1264
  wave form PDE 1049
discontinuous Galerkin constraints 946
discontinuous Lagrange elements 1145
discrete Fourier transform 1273
discrete states (node) 1069
discretization 101
discretization (node) 103, 1060
discretization (settings) 922–923, 925
discretization settings 102
disk (node)
  selections 445
disk geometry 506
disk operators 277
disk selection (node), geometry 453
dispersive materials 781
displaying
  equations 196, 199
  sensitivity analysis 1094
  user defined views 429
distance equation 1072
distance equation (node) 1073
distributed impedance (node) 809
distributed memory mode
  Linux and Windows 1635
distributed mode 1635
  interactively (Linux) 1665
  interactively (Windows) 1653
  launching (Linux) 1665
  launching (Windows) 1653
distributed ODE (node) 1068
distributed ODEs and DAEs 1063
distributed parametric sweeps 1636
distributed-memory mode
  cluster license handling 1639
  floating network license, and 1637
distributed-memory parallel mode 1623
distribution (node), meshes 647
divergence 990
divergence elements 1146
divergence operator 1000
documentation
  displaying in browser 44
documentation root directory
  Linux 1658
  macOS 1671
  Windows 1643
DOF. See degrees of freedom.
domain decomposition (node) 1335–1336
domain decomposition solver 1304
domain groups 1432
domain heat flux variables 954
domain heat source variables 956
domain material 695
domain nodes
  deformed geometry 1126
  electric currents 804
  electrostatics 793
  magnetic fields 815
  moving mesh 1115–1116, 1122

pressure acoustics, frequency domain 830
solid mechanics 972
transport of diluted species 861
domain normal (node) 364
domain point probe (node) 380
domain point probes 377
domain probe (node) 379
domain selection 102
domain solver (node) 1341
domains
associative geometry 476
coordinate systems 360
definition 408
variables, and 260
Dormand-Prince 5 time-stepping method 1286
dotted line, under parts of equations 199
DOTX files, for reports 1591
double dogleg solver
fully coupled. and 1306
log window, and 1247
double-layer boundary potential 1039
down operator 291
download file with solutions 88
downloading
compact models 88
drag-and-drop nodes 175
drop rules 1302
drop tolerance 1302
Drucker-Prager (material node) 740
duplicate (button) 73
duplicates, and data export 1575
duplicating. see copying.
duty cycle, for period functions 332
DXF files 555

E

eccentric cone (node) 512
edge (node), 2D and 3D data sets 1447
edge (node), meshes 648
edge groups (node), meshes 649
edge load (node)
solid mechanics 982
edge map (node)
component couplings 354
meshes 649
edge nodes
electric currents 804
electrostatics 793
pressure acoustics, frequency domain 830
solid mechanics 972
edge probe (node) 379
edge selection 102
edge source (node) 1024
edge tolerance 1539
edges, definition 408
edit object (node) 550
editing
analysis cases 163
constraints 196
default fonts 241
Desktop language 241
Desktop layout 240
equations 196
geometry objects 550
language on GUI 241
material properties 708
node properties 241
nodes 489
reports 1591
results tables 1472
variables 196
weak-form expressions 196
Effective BH curve (material node) 726
effective volumetric heat capacity 939
eigenfrequencies
maximum number of 1190
eigenfrequency (node) 1189
eigenfrequency study
pressure acoustics 838
eigenfrequency, prestressed (node) 1227
eigenvalue
initial values 195
linearization point 1004
problem solving 1003
shift 1301
variable 295
with operator, and 291
eigenvalue (node) 1191
eigenvalue parametric (node) 1341
eigenvalue solver
interval method 1193
search region for 1190, 1192
eigenvalue solver (node) 1271
eigenvalues 1252
maximum number of 1192
search region for 1261
eigenvectors, scaling of 1272
eikonal equation 1072, 1075
E-J characteristic (material node) 726
elastic material properties 975
elastic moduli 975

elasticity method (node) 1079
elastoplastic material model (material node) 735
elastoresistance form (material node) 729
electric currents interface 803
  theory 787
electric displacement field (node) 798
electric fields theory 784
electric insulation (node) 808
electric potential (node) 797
electric potential, constraint 202
electrode potential (material node) 725
electrode-electrolyte interface coupling (node)
  transport of diluted species 873
electrolyte conductivity (material node) 725
electrolyte salt concentration (material node) 725
electromagnetic heating (node) 929
electromagnetic units 82
electrostatic units 82
electrostatics interface 792
  theory 784
element area ratio 627
element coordinates 1130
element filters 1430
element order 1014
element orders and types 1015
element Péclet number 219
element quality 627, 630
element size 630
element type 182
element types
  Argyris elements 1137
  divergence elements 1146
  Hermite elements 1138
  Lagrange elements 1132
  Nédélec's elements of the first kind 1139
  nodal serendipity elements 1136
  Raviart-Thomas elements 1146
  serendipity elements 1136
  vector elements 1139
element volume ratio 627
element volume, relative 301, 1121
elemental constraint method 206, 1057
elements, shrinking in plots 1430
elevation (node), functions 319
eliminated stiffness matrix 1300
elimination constraint handling 1299
ellipse 504
ellipse (node) 514
ellipsoid (node) 515
elliptic PDEs 1301
emailing COMSOL 42
emetric operator 280
empty selections, indicator for 162
EMU unit systems 82
  special units in 233
encryption, for TCP connection 1674
end caps for helix 516
end caps, for revolved geometries 1465
engineering notation 1473
entering
  filenames 89
  initial values for dependent variables 196
  parameters 259
  ranges and vector-valued expressions 304
  shape function variables 302
  values for anisotropic materials 195
enumerating sections, in report 1591
env operator 281
eps 270
EPS format 1585
equation (node), reports 1594
equation of continuity 784
equation residual 220
equation section 102
equation settings 194
equation view 101
equation view (node) 103, 196
equation-based modeling 988
equations
  displaying 196, 199
  editing 196
  viewing 196, 199
equilibrium discharge materials 765
Equilibrium Reaction
  theory for 843
equilibrium reaction (node) 870
error (node)
  geometry 168
  solvers 169
error checking, for linear systems 1334, 1351
error estimate
  absolute tolerances, and 1259
  for iterative solvers 1351
  functional-based 1304
  using L2 norm 1304
error estimates 1173
error estimation 1182
error indicators 1303
error messages 75
error operator 281

error ratio bound 1334
errors and warnings 167
estimating memory use 181
ESU unit systems 82
  special units in 233
Euclidean norm
  for the relative tolerance, residual 1255
  for the relative tolerance, solution 1254
  in the threshold drop rule 1302
  join data set, and 1453
Euler angles 368
Eulerian formulation 1103
evaluating
  data in Lagrange or Gauss points 1581
  results with expressions 1414
  results with special operators 273
  tables 1483
events interface 1069
excluded edges (node) 103, 1026
excluded points (node) 103, 1026
excluded surfaces (node) 103, 1026
excluding entities from constraints 206
exclusive nodes 159
expand (node) 655
expand all (button) 73
expand, model tree 61
expanding sections 101
explicit (node) 446
explicit event (node) 1070
explicit events 1069
explicit selection (node), geometry 453
exponential filter, for wave problems 1045
export (of geometries) 490
export (of meshes) 666
export expressions (node), plots 1572
export subbranch 148
export to file (node) 1400
exporting
  animations 1576
  data from data sets 1580
  images 1583
  job configurations 1400
  mesh data 1582
  plot data 1586
  preferences 249
  series of images 1576
  table data 1583
exporting data
  to VTK files 1580, 1586
expression operator 262
expressions
  building 257
  for defining geometry 474
  for physics interface variables 197
  harmonic perturbation, and 1435
  inserting into 195
  results, and 1414
  stepping through in plots 1415
exterior boundaries 203
external (node), functions 320
external class (node) 1401
external current density (node)
  electric currents 807
  magnetic fields 819
external libraries 1625
external material model 749
external material sockets 749
external process (node) 1401
external process (window) 1250
external processes 1624
external surface charge accumulation (node) 797
extra time steps in plots 1437
extrude (node), work planes 552
extrusion (node), 1D and 2D data sets 1448
extrusion coupling operators 345

F

faces
  definition of 408
  detecting at mesh import 678
fallback conditions 372
far field variables 1546
Faraday's law 847
far-field approximation 1032
fast Fourier transform 1519, 1566
Fatemi-Socie (material node) 739
fatigue study 1219
F-cycles 1312
FFT 1273, 1501, 1519, 1566
  zero padding 1275
FGMRES iterative method 1350
FGMRES solver 1307
field (node) 1342
fields, to store in output 1173
file formats
  animation 1576
  COMSOL Multiphysics 76
  NASTRAN bulk data 680
file locking 76
file menu, Windows users 70
file system access 1625

filename, in plot titles 1418
filenames of generated files 1591
filled contours 1514–1515
filled legends 1427
filled table data
  table data 1484
fillet (node) 553
fillets 483
fill-ratio drop rule 1302
filter (node), dataset 1448
filter (node), plots 1572
filtering elements 1430
filtering, of selection list 422
finalize (node), meshes 679
finalized geometry 476
find results windows 83
Find tool 82
finding text 82
Findley (material node) 740
finite element method 990
finite element space 1130
finite elements 1130
finite voids 1030
firewall security warnings 43
fixed boundary (node)
  moving mesh 1118
fixed constraint (node) 978
fixed mesh (node)
  deformed geometry 1126
  moving mesh interface 1122
Flash file formats 1576
floating windows 63
floating-point relative accuracy 270
Floquet-Bloch periodicity 1443
flow continuity (node) 914
flow method (node) 1080
fluid (node) 925, 936, 963
fluid models, pressure acoustics 831
fluid properties (node) 907
flux (node) 867
flux conditions 201
flux discontinuity (node) 868
  transport of diluted species 868
flux vectors 993, 1042
flux/source (node)
  mathematics interfaces 1026
  PDE, boundary elements 1035
  wave form PDE 1046
fluxes, computing 211
fonts, plot defaults 241
foot-pound-second unit systems 82
for loops, in solver sequence 1382
form assembly 492
form assembly (node) 492
form composite domains (node) 588
form composite edges (node) 588
form composite faces (node) 589
form union (node) 492
form union, geometry 492
form union/assembly (node) 492
forms, as settings 171
forward FFT 1273
forward methods 1316
forward sensitivity 1092–1093
forward sensitivity operator 287
Fourier transform 1273
Fourier's law 937–938
FPS unit systems 82
  special units in 234
frame control 1182
frame time derivative 1107
frames
  deformed meshes, and 1104
  for derived values 1470
  moving 962
  settings for 102
free (node) 977
free deformation (node)
  deformed geometry 1126
  moving mesh interface 1123
free meshing 618
  troubleshooting 633
free quad (node) 650
free tetrahedral (node) 651
free triangular (node) 653
frequency domain (node) 1193
frequency domain study
  pressure acoustics 837
frequency domain, awe reduced-order model 1195
frequency domain, modal (node) 1194
frequency domain, modal reduced-order (node) 403
frequency domain, modal reduced-order model 1196
Frequency domain, modal reduced-order model (node) 401
frequency domain, perturbation (node) 1220
frequency domain, phase in 295
frequency domain, prestressed (node) 1228
frequency domain, prestressed, modal (node) 1228
frequency spectrum 1501, 1519
frequency to time FFT (node) 1189

frequency variable 295
frequency-stationary (node) 1221
frequency-stationary, one-way coupled, electromagnetic heating study 1232
frequency-transient (node) 1221
frequency-transient, one-way coupled, electromagnetic heating study 1232
Freundlich exponent 853
frozen rotor
  stationary free surface 1223
frozen rotor (node) 1222
frozen rotor with initialization (node) 1222
frozen rotor with initialization and stationary free surface (node) 1223
frozen rotor with stationary free surface (node) 1223
frozen rotor, one-way coupled with initialization, NITF (node) 1237
frozen rotor, one-way coupled, NITF (node) 1235
frustrum, cone 512
fsens operator 281
fsensimag operator 281
fully coupled (node) 1343
function name 268
function names, reserved 317
function sweep (node) 1208, 1395
functional-based error estimate 1304
functions
  adding to materials 746
  defining 316
  dimensions of inputs/outputs 228
  global and local 317
  input and output dimensions 228
  units for inputs/outputs 317
functions, user-defined, using 317
fundamental solution 1037

G
Galerkin constraints, heat transfer 946
Galerkin least-squares (GLS), stabilization 224
Galerkin method, stabilization 219
gallons 231
Gao (material node) 738
Garofalo (hyperbolic sine) (material node) 736
gauge iterative method 1368
gauge transformation 790
Gauss' law and charge relaxation theory 784
Gauss' law equation 786
Gaussian pulse (node), functions 321
Gaussian window 1275
Gauss-Seidel method 1317
GCC libraries 1659
general extrusion (node) 351
general form 997
general form PDE (node) 1023
general form PDE interface 1018
general projection (node) 354
general stress (boundary stress condition) 913
general studies 107
generalized alpha solver, BDF solver and 1260
generalized constraint force 1011
generalized minimum residual solver 1307
generalized Neumann boundary conditions for coefficient form PDE 1000
generalized-alpha solver 1258
generating
  arrays 305
  default plots 1240
Gent (material node) 738
geometric entities
  buttons 416
  context menu layout 157
  coordinate systems, and 360
  definition 408
  hiding and showing 433
  selecting 416, 423
  selection lists, pasting into 441
  variables and 296
  visualization cues 411
geometric entity selection 102
geometric multigrid solver 1311
geometric primitives 474
geometric scope
  definitions branch, and 256
  geometric entities, and 423
  materials, and 703
  variables and 294
geometric variables 296
geometrical approximation error 1184
geometrical sensitivity 1095
geometry
  adding nodes 487
  automatic rebuild of 486
  building nodes 487
  creating from mesh 670
  current node 488
  drawing toolbar 116, 118
  exporting to file 490
  expressions for 474
  geometric primitives toolbar 502
  hiding 470
  memory use 182

simplifying 476
subbranch, local 147
toolbar 115
geometry (job configurations node) 1402
geometry (node) 483
geometry frames, deformed meshes 1104
geometry objects
copying and pasting 487
deleting 178
editing 480
hiding 469
importing 555
geometry parts 494
calling 495, 625
input parameters for 495
geometry parts (node) 254
geometry representation, kernels 485
geometry sequence
definition 479
inserting from file 487
warnings and errors 168
geometry shape order 1131
GIF file format 1576
GIF format 1585
global
attribute node 616
contribution 1093
coordinate systems 478
parameters 259
solver variables 304
symmetric constraints 1011
variable probes 377
variables 260
global (node), plots 1518
global constraint (node) 103, 1067
global control variables (node) 1099
global definitions (node) 254
global definitions branch 147
global equations (node) 103, 1065
global equations, complex variables and 1066
global evaluation (node) 1478
global evaluation sweep (node) 1482
global matrix evaluation (node) 1478
global objective (node) 1099
global reduced model inputs (node) 400
global variable probe (node) 381
glTF format 1585
gmg_level, variable 304
GMG. See geometric multigrid solver.
GMRES iterative method 1350
GMRES solver 1307
go to default view (button) 429
go to source (button) 177
gpeval operator 281
gradient 990
gradient, for coloring 1426
graph plots 1501
panning and zooming in 436
graphics (window) 410
graphics rendering 410
graphics toolbar 426
gravitational IPS unit systems 82
special units 235
gravity 916
gray-scale color tables 1424
Greek characters 1420
Gregorian year 231
grid
number formatting 1509
grid (node), 1D, 2D, and 3D datasets 1449
grid box, displaying 429
grid computing 1639
grid data formats
data export settings 1581
interpolation functions 325
ground (node) 796
group by continuous tangent 443, 445
group nodes 243
by space dimension 244
by type 244
grouping, of nodes 243
guidelines, for modeling 180

H

Hamming window 1275
Hanning window 1275
hardening soil (material node) 738
hardware-accelerated image export 1583
harmonic perturbation (node) 103
harmonic perturbation plots 1435
HB curve (material node) 726
headers, in table columns 1485
heading (node), reports 1594
headlight
converting to directional light 468
headlight (node) 468
heat camera color tables 1423
heat equation (node) 1024
heat flux (node)
heat transfer interface 942
heat flux, computing 212

heat flux, flux condition 201
heat rate 941–942
heat source (node) 963
  heat transfer 935
heat sources
  defining as overall heat transfer rate 935
  line and point 949
heat transfer in fluids (node) 925, 927
heat transfer in fluids interface 920, 925, 927
  theory 918
heat transfer in solids (node) 923, 927, 938
heat transfer in solids and fluids interface 920, 927
heat transfer in solids interface 920, 923
  theory 918
heat transfer interface 920
heat transfer interfaces 921
Heat Transfer Module 952
heat transfer, and streamline diffusion 961
Heaviside functions, smoothed 333
height expression (node) 1573
helix (node) 516
Helmholtz equation (node) 1024
Helmholtz's theorem 790
help
  displaying in browser 44
help (window) 43
help searches 47
Help window 43
Hermite elements 1138
Hermitian matrices 1299
Hermitian matrix 335
hexahedral elements, meshes 617
hexahedron (node) 519
hidden entities, showing in plots 1508
hide (button) 101
hide for geometry (button) 434
hide for geometry (node) 469
hide for mesh import (node) 470
Hide for Physics (button) 434
hide for physics (node) 470
hiding geometric entities 433
hiding geometry named selections 449
hiding named selections 441
hiding objects 434
hiding windows 63
hierarchical LU (node) 1347
highlighting resulting geometry 489
histogram (node) 1520
histogram, mesh quality 627
Hockett-Sherby (material node) 735
Hoek-Brown (material node) 740
Home (button) 44
home toolbar, Windows 68
HTML editors 1591
HTML format
  tags 1419
HTTP secure proxy settings 45
hybrid modeling 474
hybrid preconditioners 1311
hybrid Schwarz solver 1336
Hygroscopic Swelling 881
hyperbola 504
hyperelastic smoothing 1110
hysteresis 266

I

icons
  application libraries window 85
icons, key 163
IDA 1258
ideal gas (material node) 727, 741
identity boundary pair (node) 374
identity edge pair (node) 374
identity mapping (node) 354
identity pair (node) 373
identity pairs 372
identity point pair (node) 374
if operator 282
ignore edges (node) 589
ignore faces (node) 590
ignore vertices (node) 590
image (node) 1583
image (node), functions 321
image (node), reports 1594
image file formats
  BMP 1585
  EPS 1585
  GIF 1585
  glTF 1585
  JPEG 1585
  PNG 1585
  TIFF 1585
image snapshot (button) 1614
images
  models, saving 1619
  plot animations 1576
  screenshots, capturing 1614
  thumbnail 241
imaginary parts, complex variables 1066
imaginary parts, suppressing small 1016
impedance (node) 833

impedance graph (node) 1521
implicit event (node) 1070
implicit events 1069
implicitly restarted Arnoldi method 1261
import (node) 555, 679
import material library (button) 742
imported meshes
  hiding 470
  remeshing 669
importing
  2D geometries from DXF files 474
  3D geometries from STL and VRML files 474
  3MF files 680
  CAD files 474
  data from multiple simulations 1484
  data to tables 1484
  file data sources, example 324
  function data 323
  geometric operations 536
  geometry objects 555
  global parameters 259
  interpolation curves to tables 520, 527
  material libraries 742
  mesh data 669
  mesh operations 671
  meshes 668, 679
  PLY files 680
  preferences 249
  sectionwise files 680
  STL files 680
  variables 261
  VRML files 680
imprints, of parts in assembly 492
inch-pound-second unit systems 82
incident pressure field (node) 835
incomplete Jacobian, in sensitivity 1091
incomplete LU (node) 1348
inconsistent stabilization 222
inconsistent stabilization (settings) 921
inconsistent stabilization methods 961
inconsistent stabilization settings 103
inconsistent units 168
independent variables 478
indicator states (node) 1070
InfiniBand 1668
infinite domains 382
infinite element domain (node) 393
infinite void 1030
infinity 270
  in plots 1415
inflection point, for cubic curves 505
inflow (node) 865
inheritance and variables 304
inhomogeneous materials 781
ini file
  Linux 1656
  macOS 1669
  Windows 1642
initial values
  for nonlinear solvers 1254
  problem types 1064
  specifying 195
initial values (node) 923, 925
  acpr interface 832
  electric currents 807
  electrostatics 796
  general information 103
  heat transfer interface 939
  magnetic fields 819
  PDE interfaces 1022
  pressure acoustics, frequency domain 832
  single-phase, laminar flow 909
  solid mechanics 973
  transport of diluted species 864
  wall distance interface 1073
  wave form PDE 1035, 1046
initializing a COMSOL Multiphysics server 1630
inlet (node) 910
  curvilinear coordinates 1081
input matrix (node) 1383
input parameters, for geometry parts 495
input properties 722
insert expression (button) 378, 1415
inserting
  boundary layer splits 633
  element splits, meshes 641
  expressions and predefined quantities 1414
  geometric entities into selection lists 441
  geometry sequences 487
  variables into expressions 378, 1414–1415
inserting into expressions 195
integer range 306
integral
  contribution 1093
  data series, and 1434
  transforms, dest operator 280
integral (node) (dataset) 1444
integral objective (node) 1098
integral, over geometrical curves 282
integrate operator 282

integration 1444
integration (node), component coupling 356
integration coupling operators 346
integration order 1444
integration over extra dimension (node) 1087
Intel Math Kernel Library (Intel MKL) 1635
Intel MKL 1300
Intel MPI library 1667
Intel network 1668
interactive plotting
  cross-section plots 1497–1498
  isosurfaces 1524
  slice plots 1552
interface types, built-in 751
interface types, for external materials 749
interference pattern (node) 1523
interior boundaries
  definition 203
  removing 478
  selecting 409
interior Dirichlet boundary condition (node) 1027
interior flux (node) 1046
interior flux split (node) 1047
interior flux/source (node) 1027
interior sound hard boundary (wall) (node) 835
interior source (node) 1048
interior wall (node)
  curvilinear coordinates 1082
intermediate meshes 347
internal boundary heat flux variables 955
internal degrees of freedom 295, 1246
internally symmetric physics 1011
internet resources 42
interpolated solutions 1187
interpolation
  functions, materials and 746
  functions. sectionwise data 325
  of particle trajectories 1427
  splines 326
interpolation (node), functions 322
interpolation curve (node) 519
intersecting geometry, example 597
intersection (node)
  geometry 558
  selections 447
intersection point datasets 1450
intersection selection (node), geometry 455
interval (node) 521
interval geometry for 1D models 521
interval method, for eigenfrequencies 1191
interval method, for eigenvalues 1193
interval method, for mode analysis 1216, 1226
inverse FFT 1273
inverse functions. for interpolation 326
inverse Maxwell capacitance 1479
inverted mesh elements 297, 631
inward heat flux 958
IPS unit systems 82
  special units in 234
isdefined variable 274
isinf operator 282
islinear operator 283
isnan operator 282
ISO preferred frequencies 306
isoparametric elements 1131, 1136
isosurface (node)
  dataset 1452
  plots 1524
isosurfaces, level labels and 1524
isotropic diffusion 961
  inconsistent stabilization methods 220
  stabilization methods 222
isotropic materials
  defining 975
  elastic properties 975
  modeling 195
isotropic strength parameters (node) 734
isotropic ultimate strains (node) 734
iterative (node) 1349
iterative algorithms, adaptive solver and 1302
iterative method 1367
iterative refinements, for linear solvers 1334
iterative solvers
  conjugate gradients 1307
  FGMRES 1307
  GMRES 1307
  modeling, and 207
  preconditioners for 1309
  Vanka 1375

J

jacdepends operator 283
Jacobi (node) 1352
Jacobi damping factor 1340, 1356
Jacobi method 1352
Jacobian
  matrix 207, 1252, 1256
  symmetric 1299
Java files 77
Java heap space 1625
job (node) 1402

job configurations (node) 1386
job scheduler 1203
join (node) 1452
join entities (node) 682
Joule heating interface 928
JPEG format 1585
jump (node) 1081

K key to icons 163
keyboard shortcuts 61, 135
kilopound per square inch 231
knot points 524
knowledge base, COMSOL 43
Krylov preconditioner (node) 1352

L L2 norm error estimate 1304
labels 102
Lade-Duncan (material node) 740
Lagrange element 1132
Lagrange element variables 302
Lagrange multipliers
  boundary conditions, and 1008
  interpretations of 211
  variables for 303
  weak constraints, and 206
Lagrange points 1132
Lagrangian formulations 1103
Lamé parameters 975
Lamé parameters (material node) 734
laminar flow interface 904
Langmuir constant 853
languages, for COMSOL Desktop 241
LAPACK 1050
Laplace contribution 1306
Laplace smoothing 1110
Laplace's equation (node) 1024
LaTeX symbols 1597
Lax-Friedrichs flux 1044
layered material
  node 710
layered material (node), data sets 1453
layered material link
  node 714
layered material slice (node)
  plots 1524
layered material stack
  node 717
leaking wall, wall boundary condition 909
Legendre polynomials 309
legends
  filled 1427
legends, displaying 429, 1511, 1519, 1521–1523, 1527, 1536, 1544, 1549–1551, 1567
legends, position 1504, 1506
length unit, for geometry 484
level labels 1515, 1524
Levenberg-Marquardt solver 1249
license agreement, COMSOL Multiphysics 50
license error (node) 168
licenses
  borrowing 247
  display and use of 246
  number 50
  products list 50
light sources and attributes 463
light sources, hiding 461
lighting models 706
limits, adding to segregated solver 1364
lindev operator 283
line (node), plots 1526
line and point heat source variables 957
line average (node) 1475
line charge (node) 799
line charge (on axis) (node) 799
line charge (out-of-plane) (node) 800
line current (on axis) (node) 822
line current (out-of-plane) (node) 822
line current source (node) 811
line current source (on axis) (node) 811
line data (node) 1526, 1570
line graph (node) 1526
line heat source (node) 943
  heat transfer interface 949
line heat source on axis (node) 943
  heat transfer 943
line heat source variable 957
line integration (node) 1476
line iterative method 1369
line mass source (node)
  fluid flow 915
  species transport 869
line maximum and minimum (nodes) 1477
line plots, maximum and minimum 1527
line segments 522
line source
  species transport 846
linear buckling (node) 1223
linear elastic material (node) 974
linear elements 1130, 1132
linear extrusion (node) 352
linear projection (node) 355

linear solvers, compared to nonlinear 1256
linear system solvers 1330
linear viscoelastic material (node) 734
linearization point
  AWE solver 1267
  model solver 1281
  solutions, and 1416
  stationary solver 1283
linearized resistivity (material node) 725
linper operator 283
linpoint operator 283
linsol operator 283
lintotal operator 283
lintotalpeak operator 283
lintotalrms operator 284
Linux clusters 1623, 1635
Linux, ini file 1656
linzero operator 284
liquids and gases materials 765
list (node), reports 1594
LiveLink for MATLAB 1623
load cases
  creating groups for 216
  defining 1186
  definition 214
load group (node) 216
load groups 164, 214
local
  attribute node 616
  CFL number 906
  definitions 256
  mesh size 630
  properties, materials 708
  variables 260
local coordinates 1130
local properties, for materials 692
location
  max and min, coupling operators 357
  maximum and minimum plots 1528
lock plot window (button) 1492
locked MPH-files 76
log (button) 1250
log (window) 1246
log sampling 1326
log scale, for graphs 1501
logarithmic frequency range 306
logarithmic variables 187
logical conditions, for geometry sequences 539
logical expression (node), meshes 683
login information
  Linux 1660
  macOS 1673
  Windows 1646
logotype
  in reports 1593
logs, from solver 1246
Lorentz force 783
loss tangent, dissipation factor (material node) 727
loss tangent, loss angle (material node) 726
Lotka-Volterra equations 1062
lower gradient limits, crosswind diffusion and 220
lower limit (node) 1354, 1374
Ludwik (material node) 735
lumped parameters, transformation of 1478
lumped step (node) 1354

M

macOS, ini file 1669
magnetic field (node) 821
magnetic fields interface 814
  theory 788
magnetic insulation (node) 820
magnetic losses (material node) 727
magnetic potential (node) 821
magnetostrictive (material node) 728
magnitude controlled 1560
main menu and toolbar, macOS and Linux 71
main toolbar 70
make all model inputs editable (button) 193
mapped (node) 654
mapped meshing 654
mapped system (node) 367
mapping method, for contact 375
mass based concentrations (node) 864
mass term 998
mass, of geometry 313
master meshing sequence 669
Matake (material node) 740
material (node) 702
Material Browser (window) 698
material colors
  showing 458, 461
material coordinates 297
material frames
  deformed meshes 1104
material libraries
  reloading 698
Material Library 693, 742
material properties
  adding 708
  editing 708

electromagnetics 781
evaluating and plotting 695
material node, and 692
modeling, and 194
referencing 293
material property groups 692
material sweep (node) 1209, 1396
material type 704
material type settings 102
materials
adding functions 746
batteries and fuel cells 763
bioheat 764
building 764
databases 693
definitions 692
domain, default 695
equilibrium discharge 765
geometric scope, and 703
liquids and gases 765
local properties 708
MEMS 766
optical 771
output properties 707, 722
piezoelectric 770
piezoresistivity 771
RF 772
searching 698
semiconductors 772
status 704
subbranch, global 147
subbranch, local 147
materials (node) 701
materials (node), global 255
materials toolbar 122
Math Kernel Library (MKL) 1635
Windows 1645, 1659, 1672
math symbols 1420, 1597
mathematical constants 270, 307
mathematical functions 270
mathematics, interfaces for 988
MATLAB
connecting to a server 1631
LiveLink for 1623
MATLAB (node), functions 328
matrix
defining 335
matrix decomposition 337
matrix diagonalization 336–337
matrix format 1324
matrix histogram (node) 1527
matrix inverse 335
matrix symmetry 1324
matrix, creating 335
Matsuoka-Nakai (material node) 740
MatWeb, importing material data from 742
max/min line (node) 1527
max/min point (node) 1527
max/min surface (node) 1527
max/min volume (node) 1527
maximum (node), component coupling 357
maximum (node), data set 1454
maximum and minimum
derived values 1476
location of 357
plot values 1528
maximum coupling operators 346
maximum number of groups, for clusters 1360
maximum, of data series 1434
Maxwell capacitance 1479
Maxwell's equations
dielectrics 782
quasi-static approximation 789
theory 779
mean effective thermal conductivity 938
mean effective thermal diffusivity 939
mean energies (node) 1225
mean operator 284, 291
measure (button) 75
measure (node) 491
measure (window) 491
memory use
batch mode 1623
estimating 181
information 182
MEMS materials 766
menus and toolbars 68
merge edges (node) 591
merge vertices (node) 591
merged vertex 587
mesh
boundaries detection 681
boundary layers 620
clearing 178
creating geometry from 670
data, importing 669
deleting features 178
elements, quality and size 630
exporting to file 666
frames, deformed meshes 1104

importing 668
mirror 643
modeling techniques 628
moving meshes 1105
operations on imported meshes 671
plot filter elements 1430
quality stop conditions 1113
running COMSOL in parallel 1634
simplify when importing 556
smoothing methods 1110
subbranch 148
time derivative 1107
toolbar 125
troubleshooting 633
vertices 617
mesh (job configurations node) 1402
mesh (node) 616
dataset 1455
exports feature 1582
plots 1529
mesh adaptation 1173
mesh control domains (node) 591
mesh control edges (node) 592
mesh control entity
edge 590
face 590
vertex 590
mesh control faces (node) 592
mesh control operations 587
mesh control vertices (node) 592
mesh element quality 629
mesh elements, definition 616
mesh import
detect faces in 678
mesh parameters
defining 619
mesh parts 625
mesh quality measures 1530
mesh rendering
showing in 2D 458
mesh size, plotting 1530
mesh slip (node)
moving mesh 1120
meshelement variable and duplicates 1575
message passing interface
Linux 1667
Windows 1654
messages (window) 75
method call (job configurations node) 1402
method call (node) 171
method of lines 1258
methods, for creating the geometry 492
methods, running in models 170
M-files 77
Microsoft MPI 1654
Microsoft Visual Studio (2017) 1653
minimum (node)
component coupling 357
data set 1454
minimum coupling operators 346
minimum, of data series 1434
mirror (node), 2D and 3D datasets 1455
mirror (node), geometry 559
mirror mesh 643
MMA solver 1249
modal dialogs, forms as 171
modal participation factors 266
modal reduced matrices 1263
modal solver (node) 1279
mode analysis (node) 1225
Model Builder
COMSOL Desktop 58
context menus and 154
dataset nodes, adding 1439
global features 254
keyboard shortcuts 137
moving nodes 175
sequencing, and 142
toolbar 68
viewing names and tags 152
Model Builder (window) 141
model documentation
opening 86, 499
model equation settings 194
model file for Java 1624
model files for Java 77
model files for MATLAB 77
model files for VBA 77
model input (node) 265
model inputs 192
adding 708
default 263
for material properties 692
multiphysics couplings 192
multiphysics interfaces 180
model inputs settings 103
model method calls 171
model reduced-order model (node) 1209
model reduction (node) 1159
model toolbar 70, 110

model tree 141
branches 147
expanding and collapsing 73
Model Wizard 105
models, building 105
models
comparing 173
guidelines for creating 180
images, saving 1619
modified eikonal equation 1072, 1075
modules, COMSOL Multiphysics 40
Mohr-Coulomb (material node) 740
molarity, unit for 230
moment of inertia 313
monochromatic aberration 1481
monopole source (node) 832
monopole sources 827
Monte Carlo simulations 331
Mooney-Rivlin (material node) 738
Morrow (material node) 739
mouse
from 3Dconnexion 435
mouse wheel, for selections 409
move (node) 560
movie formats 1576
moving
between windows 61
nodes 175
windows 62
moving frames 962
moving mesh interface 1121
MPa unit systems 82
special units in 234
MPH-files 76
MPI 1633
MPI library 1654
multigrid (node) 1354
multigrid cycles 1312
multigrid level (node) 1209
multigrid levels, solvers and 1311
multigrid solver 1311
multiparameter sweeps
batch sweeps, and 1198
cluster sweeps, and 1206
parametric sweeps, and 1210
multiphysics
branch 148
multiphysics (node) 191
multiphysics coupling
electromagnetic heating 929
Joule heating 928
multiphysics coupling report node 1609
multiphysics interfaces, solver defaults for 190
multiphysics modeling 180, 188
multiple eigenvalues 1507
multiple preconditioners 1311
multiplicative Schwarz solver 1336
multiprocessor mode options 1644, 1658
multiprocessor usage
Linux 1658
Mac 1671
Windows 1644
multislice plot (node) 1530
MUMPS solver 1331
direct attributes, and 1330
memory use 181
parallel operations, and 1634
Murnaghan (material node) 738
mutual capacitance 1479
Myrinet network 1668

N
Nabarro-Herring (material node) 736
nabla 990
names
for nodes 152
for physics interface node 293
namespace 293
naming
files 89
nodes 152
part models 500
physics interface variables 197
variables 293
NASTRAN files
creating domain information from 680
exporting meshes 666
import node, and 680
natural boundary condition 1006
natural spline 520
nautical mile 231
navigating the COMSOL Desktop 61
Nédélec's elements of the first kind 1139
Nernst-Einstein relation 847, 863, 874, 877
nested conditional expression 284
nested for-loop 1207
nested parametric sweeps
batch sweep 1198
cluster sweep 1206
parametric sweep 1210
network authentication method 1625

network sockets 1625
Neumann boundary condition 201, 992
Neumann boundary conditions
  for coefficient form PDE 1000
  generalized 1000
new (window) 105
new material library (button) 742
Newton iterations
  termination of 1346
Newton method 1254, 1343
next node (button) 73
nif operator 284
niterCMP, variable 304
no diffusive flux (node)
  mathematics interfaces 1027
no flux (node) 865
  mathematics interfaces 1027
no slip, wall boundary condition 909
no viscous stress (open boundary) 912
nodal constraint method 206, 1057
nodal discontinuous Lagrange elements 1145
nodal discontinuous Lagrange shape functions 1049
nodal serendipity elements 1136
node points 1130
nodes
  adding 154
  contributing type 159
  copying and duplicating 175
  deleting 178
  enable and disable 162
  equation view 196
  equations, displaying 199
  exclusive type 159
  grouping of 243
  Model Builder, and 61, 141
  moving 175
  names and tags, viewing 152
  override selections 161
  physics defaults 157
  physics interface defaults 155
  properties 242
  properties, editing 241
  reaction forces, and 359
  referenced source, going to 177
  renaming 242
  status 161
  study types 1151
nodes, common settings 101
noenv operator 281
nojac operator 284
nonconforming meshes 617, 670
nonconservative formulations 845
non-Latin characters, in plots 241
nonlinear based error norm 1350
nonlinear controller, for BDF methods 1287
nonlinear elastic material (material node) 737
nonlinear materials 781
nonlinear problems, convergence 183
nonlinear solver, compared to linear solvers 1256
nonlinear solver, damped Newton methods 1254
nonlinear stationary solver 1252
nonlocal couplings 345
nonoverlapping parts, pairs 372
norm of difference 1453
normal
  reversing in some domains 364
  reversing on some boundaries 364
normal acceleration (node) 832
normal components
  of conservative convection term 1001
  of conservative source term 1001
  of diffusive flux 1000
normal conductive heat flux variable 955
normal convective heat flux variable 955
normal current density (node) 808
normal current density, flux condition 201
normal distribution, random functions 331
normal stress (material node) 740
normal stress, normal flow (boundary stress condition) 913
normal total energy flux variable 955
normal translational heat flux variable 955
normal variables 299
normal vector continuous variables 300
normal vector variables, for element surfaces 300
Norton (material node) 736
not-a-number 270
  in plots 1415
notation
  format for table data 1473
notational conventions, for PDEs 990
note (node), reports 1594
noxd operator 276
null-to-null beam width 1548
number formatting
  axis 1504, 1507
  color legends 1509
  grids 1509
number of cores to use 1644, 1658
number of degrees of freedom 295, 1383

numerical constants 270, 307
numerical diffusion 222
numerical results, displaying directly 1470
numerical stabilization techniques 219
numerical viscosity 222
NURBS 575
Nyquist (node) 1531
Nyquist criterion 1313

O objective function
complex-valued 1095
definition 1090
specification of 1092
oblique cone 512
octave band plot (node) 1531
ODE
for indicating change 1061
ODE solver settings 1538
odei 1064
ODEs and DAEs interface 1064
ODEs, distributed 1063
OGS/GE 1203
Ohm's law 848
Ohm's law and charge relaxation theory 784
one-point map (node)
component couplings 353
meshes 655
open (button) 71
open boundary (node)
single-phase flow 912
transport of diluted species 870
open grid scheduler/grid engine 1203
open PDF documentation (button) 87, 498
for user-library application 87, 498
opening
context menus 154
recovery files 79
operation features, solvers 1251
operation nodes, solvers 1151
operational electrode state-of-charge (material node) 725
operations on imported meshes 671
operations, undoing and redoing 177
operator name 268
operators
adj 276
at 276
at1 and at2 288
atenti 280
atlocal 276
atonly 276
attimemax 276
attimemin 276
atxd 276
bdf 278
centroid 278
circle, disk, sphere, ball 277
circumcenter 279
d 279
depends 280
dest 280
dflux 278
down 291
dtang 279
emetric 280
env, bndenv, and noenv 281
error 281
expr 280
fsens 281
fsensimag 281
gpeval 281
if 282
integrate 282
isinf 282
islinear 283
isnan 282
jacdepends 283
lindev 283
linper 283
linpoint 283
linsol 283
lintotal 283
lintotalpeak 283
lintotalrms 284
linzero 284
mean 284, 291
nif 284
nojac 284
noxd 276
pd 279
ppr 284
pprint 284
prev 285
reacf 285
realdot 286
residual 287
sens 287
setconst 287
setind and setval 288
shapeorder 288

side 288
spatial at 288
stddev 289
subst 289
sum 289
test 290
timeavg 290
timeint 290
timemax 290
timemin 290
treatasconst 290
try_catch 290
uflux 278
up 291
var 291
with 291
withsol 292
operators, applying to data series 1470
optical aberration (node) 1533
optical materials 771
optimization (node), study step 1227
optimization solver 1249
optimization solver (node) 1282
order
of Lagrange elements 1132
order of elements 1015
orthographic projection 461
switching to 432
orthographic scale 462
orthotropic (material node) 734
orthotropic materials, coordinate systems and 360
orthotropic strength parameters, Voigt notation (node) 734
orthotropic ultimate strains, Voigt notation (node) 734
orthotropic, Voigt notation (material node) 734
oscillations in the solution 219
Ottosen (material node) 740
outflow (node) 943
transport of diluted species 866
outlet (node) 911
curvilinear coordinates 1082
out-of-core MUMPS solver 1331
out-of-core PARDISO solver 1333
out-of-plane wave number 837
output from solvers, storing 1343
output properties, materials 707, 722
overall heat transfer rate 935
overlapping object, highlighting 409
overlapping objects
selecting 409
overlapping Schwarz method 1305
overridden selections 161
override and contribution 101, 103, 160
owner mode
for Linux 1658
for Mac 1671
for Windows 1644

P

Padé approximation, for AWE 1267
pair boundary heat source (node) 941
pair contact impedance (node) 809
pair name 268
pair nodes
electric currents 804
electrostatics 793
magnetic fields 815
pressure acoustics, frequency domain 830
solid mechanics 972
transport of diluted species 861
pair selection 103
pairs 372
panning
in graph plots 436
parabola 504
parabolic PDEs 1301
parabolic problems 1301
Parallel Direct Sparse Solver for Clusters 1333
parallel operations 1622
parallel solver 1300
parallel speedup, BLAS libraries 1634
parallel, running COMSOL in 1633
parameter cases 260
parameter check (node) 561
parameter estimation (node) 1227
Parameter switch 1210
parameter switching 1210
parameterization variables 298
parameterized curve (node), 2D and 3D 1456
parameterized surface (node) 1456
parameters
built-in 307
checking in geometry 561
parameters (node, under Results) 259
parameters (node) 258–259
parametric (node)
solver attribute feature 1357
parametric curve (node) 523
parametric extrusion (node), 1D and 2D 1457
parametric extrusion, transformation of level in 1457
parametric results, storing 1397

parametric solver 1257
parametric surface (node) 524
parametric surfaces
  from elevation functions 320
parametric sweep
  response surface plots from 1567
parametric sweep (node) 1210
  job configurations 1387
parametric sweeps
  definition 1155
  distributed 1636
  distributing 1205
Parasolid 485
PARDISO solver
  direct attribute, and 1330
  direct solver, and 1300
  memory use 181
  parallel operations, and 1634
part instance (node) 495, 561
Part Libraries 497
  adding 499
Part Libraries (window) 497
Part Library Update 92
part models 497
part variants 496
partial differential equations 990
partially saturated porous media (node) 876
participation factors (node) 266
particle (node), 1D plot 1536
particle bin dataset (node) 1458
particle dataset (node) 1458
particle evaluation (node) 1479
particle tracing (node) 1536
Particle Tracing Module (operators) 281
particle tracing with mass (node) 1539
particle trajectories (node) 1541
particle trajectories, interpolation of 1427
particle types, in plots 1542
particles, in plots 1542
partition and Boolean operation features 536
partition domains (node) 564
partition edges (node) 566
partition faces (node) 567
partition objects (node) 563
parts 494
  calling 495, 625
parts (node), global 255
paste (button) 73
pasting, copies
  nodes 175
  selections 421
patents list, COMSOL 50
pathlines 1536
PBS 1204
PBS scheduler 1668
PDE system 997
PDE, boundary elements (node) 1034
PDE, boundary elements interface 1031
PDEs
  coefficient form 1017
  elliptic 1301
  general form 1018
  modeling 990
  parabolic 1301
  stationary 1252
  time-dependent 1252
peak value 1437
Péclet number
  local 222
  stabilization and 219
percent unit 229
perfect conductors and dielectrics 782
perfect magnetic conductor (node) 822
perfectly matched layer (node) 389
perfectly matched layers 382
periodic boundary conditions 208, 983
periodic condition (node) 103, 944
  electrostatics 798
  mathematics interfaces 1028
  pressure acoustics 835
  solid mechanics 983
  transport of diluted species 868
  wall distance 1074
periodic flow condition (node) 914
perspective projection 461
Perzyna viscoplasticity (material node) 736
phase angle variable 295
phase factors, pressure acoustics 837
phase functions, for FFT data 1277
phase initialization (node) 1238
phase portrait (node) 1542
phasors 782
phi 1465
physical constants 272, 307
physical memory 182
physical model (settings) 921
physics
  nodes 155
  toolbar 123
physics builder 105

physics groups 93
physics interface report node 1609
physics interfaces 93
  copying 97
  default nodes 157
  inserting 97
  nodes, by space dimension 156
  selecting for study 1178
  studies, and 1178
  subbranch 147
physics interfaces, common settings 101
physics symbols
  coordinate directions for 165
  showing 164
physics-controlled meshing 628
physics-induced meshes 628
picking geometric entities 409
piecewise (node), functions 328
piecewise functions, materials and 746
piezoelectric materials 770
piezoresistance form (material node) 729
piezoresistivity materials 771
pinning windows 63
pivot perturbation strategy in PARDISO 1333
pivoting perturbation 1333
placeholder files
  documentation 87
plain sweep 1257
planar edges, detecting 682
planar faces, detecting 682
plane geometry (node) 486
plane stress and strain 971
plane wave radiation (node) 834
Plasma Module 785
player, for animations 1576
plot (node) 1586
plot data, copying to clipboard 1487
plot data, saving in model 1408
plot group (node) 1402
plot group toolbar 131
plot groups subbranch 148
plot titles, variables for 1418
plots
  arrow line 1513–1514
  arrow surface 1514
  arrow volume 1514
  color expressions 1571
  contour 1514
  convergence 1153, 1245
  coordinate systems 1515
  cross-section 1495, 1500
  cross-section, 2D 1497
  cross-section, 3D 1498
  derivative recovery 1432
  functions, and 317
  global 1518
  height expressions 1573
  histograms 1520
  isosurface 1524
  line 1526
  line graphs 1526
  locking 1492
  maximum and minimum 1527
  mesh 1529
  multislice 1530
  Nyquist 1531
  octave band 1531
  particle tracing 1536, 1544
  particle tracing with mass 1539
  particle trajectories 1541
  phase portrait 1542
  point graph 1543
  principal stress volume, surface, and line 1545
  ray trajectories 1549–1550
  scatter surface and scatter volume 1551
  selections for 1574
  slice 1552
  streamline 1556, 1561
  surface 1564
  surface slit 1565
  table 1565
  titles, customizing 1417
  updating 1408
  volume 1570–1571
plotting
  expressions in results 1414
  material properties 695
  previous, next, first, or last 1502, 1507
  probes, while solving 377
  solutions side by side 1572
plug flow solver (node) 1282
PLY files 555
PLY files, exporting for 3D plots 1586
PLY files, importing 680
PMC. see perfect magnetic conductor.
PNG format 1585
Poincaré map (node) 1542
point (node), geometry 526
point charge (node) 800
point charge (on axis) (node) 801

point current source (node) 811
point current source (on axis) (node) 812
point data (node) 1513, 1543
point evaluation (node) 1477
point graph (node) 1543
point heat source (node)
  heat transfer 949
point heat source on axis (node) 950
point heat source variable 957
point light (node) 466
point load (node) 982
point load on axis (node) 983
point mass source (node)
  fluid flow 915
  species transport 869
point matrix evaluation (node) 1480
point nodes
  electric currents 804
  electrostatics 793
  magnetic fields 815
  pressure acoustics, frequency domain 830
  solid mechanics 972
point probe expression (node) 381
point selection 102
point source
  species transport 845
point source (node) 1024
point trajectories (node) 1544
points to attach (node) 1086
points, definition 408
pointwise constraint (node) 103, 1057
pointwise constraints 207
Poisson's equation (node) 1024
Poisson's ratio 975
Poisson's ratio (material node) 734
polar complex number 1473
polar decomposition 337
polar plot group (node) 1502
polar plots
  axis settings for 1503
polarization ellipse 1429
polygon (node) 526
polynomial-preserving recovery 284, 1432
poroacoustics model (material node) 724
poroelastic material (node) 734
poroplastic material model (material node) 736
porous electrode coupling (node) 872
porous media transport properties (node) 873
port usage 1662
ports, usage of 1662
positive definite matrices 1301
postsmoother (node) 1360
postsmoothers 1312
potentials, scalar and magnetic 780
ppm unit 229
ppr and pprint operators 284
precedence, for operators 270
preconditioners
  algebraic multigrid 1312
  geometric multigrid 1311
  hybrid 1311
  selecting 1309
  selection guidelines for 1310
  solving without 1309
  Vanka 1319
predator-prey equations 1062
predefined
  quantities and expressions 1414
  variables 293
preferences 248
  importing and exporting 249
  migrating 1644
  security 1624
prefixes, for units 226
preordering algorithms 1331
preprocessing, of table plot data 1566
prescribed deformation (node)
  deformed geometry 1126
  moving mesh 1116
  moving mesh interface 1123
prescribed displacement (node)
  solid mechanics 977
prescribed displacement, constraint 202
prescribed displacement, example 204
prescribed mesh displacement (node)
  deformed geometry 1126
  moving mesh 1118
  moving mesh interface 1122
prescribed mesh velocity (node)
  deformed geometry 1127
  moving mesh interface 1123
prescribed normal mesh velocity (node)
  deformed geometry 1127
  moving mesh 1118–1119
  moving mesh interface 1123
preselections 411
presmoother (node) 1360
presmoothers 1312
pressure (node) 833
pressure acoustics (node) 831

pressure acoustics, frequency domain (acpr) interface 828
theory 837
pressure point constraint (node) 915
pressure-wave speed (material node) 734
pressure-wave speeds 976
prestressed analysis 1404
prestressed analysis plots 1435
prev operators 285
preview
reports 1590
preview files
application libraries window 85
previous node (button) 73
previous solution (node) 1360
primitive functions, for interpolation 327
principal inertia 313
principal stress line (node) 1546
principal stress surface (node) 1546
principal stress volume (node) 1545
principle of virtual work 1095
print (button) 1614
printing plots 1614
prism elements, meshes 617
probe contribution 1093
probe objective 1093
probe objective (node) 1098
problematic deformed mesh (node) 631
product licenses, releasing 247
product updates
preference settings 50
products used, displaying 246
programming commands, for geometry sequence 539
progress (button) 1244
progress (window) 1243
projection coupling operators 345
projection, perspective and orthographic 461
prolongation matrices 1312
property groups 692, 706
property package (node, for thermodynamics) 332
proxy server settings
for online documentation and library updates 45
pseudo time stepping
settings 906
solvers, and 1256
solving 1256
pseudo time-stepping
for fully coupled solver 1347
for segregated solver 1365
publishing a report 1591
pyramid (node) 528
pyramid elements, meshes 617

Q Qlogic network 1668
quadratic elements 1130, 1132
quadratic mean 1434
quadrature error 1184
quadric curves 504
quadrilateral elements, meshes 617
quality measures, for meshes 1530
quasi-static approximation 789
quick access toolbar 70

R radiation heat transfer (material node) 727
radiation pattern (node), plots 1546
rainbow color tables 1423
ramp (node), functions 330
random (node), functions 330
random vibration (node) 404
range (button) 305
Range dialog box 305
ranges
format options 304
using arrays 305
vector-valued expressions, and 306
rank-2 tensor densities 195
ratio of specific heats 937
rational Bézier curves 504
Raviart-Thomas elements 1146
ray (node), dataset 1459
ray (node), plot 1549
ray bin dataset (node) 1460
ray evaluation (node) 1480
Ray Optics Module (operators) 281
ray tracing (node), study 1229
ray trajectories (node) 1550
rayl unit 231
reacf operator 285, 1444
Reacting Volume 864
reaction coefficients (node) 872
reaction forces
computing 211
constraints, and 204
data sets, and 1444
reaction terms
applying 1011
constraints, and 204
Reactions
in porous catalyst pellets 880
reactions (node)
transport of diluted species 864

reactive pellet bed (node) 878
real parts, complex variables 1066
real parts, suppressing small 1016
realdot operator 286
reassembly, manual 1326
receiver (node), 2D and 3D data set 1460
reconnecting
  COMSOL to a server 1631
recovery files 79
  checking for at launch 79
rectangle (node) 530
rectangle (node), functions 331
rectangular complex number 1473
rectangular pyramid 528
rectangular window 1274
redo (button) 73
reduced electric fields (node) 1230
reduced model, modal solvers 1279
reference (node), meshes 655
reference admittance 1511
reference coordinates 297
reference impedance 1522
refine (node), meshes 656
reflections, in sector data sets 1466
refpnt variable 971
refractive index (material node) 727
refreshing
  grid data from functions 1449
region of interest 382
regular expressions, in searches 82
regular screen displays 240
reinitialization (node)
  on domains, boundaries, edges, and points 1071
relative element volume 301, 1121
relative tolerance 1538
relaxation factor, for preconditioners 1311
reloading material libraries 698
remeshing
  a deformed mesh 1113
  automatically 1113
  conditions 1328
remeshing imported meshes 669
remote computing 1639
remote desktop connection 1643
remove from selection (button) 421
removing
  interior boundaries 478
  user application library 86, 173
  user part library 499
removing details 593
renaming nodes 242
rendering, detail 432
repair tolerance
  default 485
  for DXF import 557
  for geometry 493
  for STL files 681
replace expression (button) 378, 1414
report (node) 1590
report generator 1588
report group toolbar 132
report templates
  creating, exporting, and using 1589
reports
  animation 1576
  data 1580
  enumerating sections 1591
  plot data 1586
  plot images 1583
  style sheet for 1591
  subbranch 148
  template for 1591
  text formatting tools 1595
rerun job (button) 1250
reserved names, variables and 307
reset desktop (button) 62
reset hiding (button) 434
reset selected (button) 196
resetting
  desktop layouts 240
resetting solvers 1154
residual operator 287
residual vector 1327
residual, storing last 1325
residuals, consistent stabilization and 220
resistivity temperature coefficient
  for non-SI units 724
resizable tables and text areas 65
resizing windows 62
response spectrum (definitions node) 266
response spectrum 2D (node) data set 1461
response spectrum 3D (node) data set 1461
response surfaces 1199, 1567
results
  branch 147
  displaying while solving 1243
  tables, editing 1472
  toolbar 128
retardation factor 854
reusing solutions, for continuation 1170

reusing sparsity pattern 1326
reverse normal (node) 364
revert to saved file 78
review physics interface 107
reviewing dependent variables 97, 107
revolution (node), 1D and 2D data sets 1465
revolve (node), geometry 568
revolving axisymmetry 1465
RF materials 772
RGB values, for custom colors 1426
ribbons, as streamline type 1428
right-click, to create selection 418
rigid body suppression (node) 980
rigid transform (node) 569
ring load (node) 984
RK34 time-stepping method 1286
RMS 284, 1434
RMS value 1437
Robin boundary conditions 1026–1027
roller (node) 979
root (window) 80
root mean square 1434
root node
  add component 106
  definition 76
rotate (node), geometry 570
rotated system (node) 367
rotating and zooming, in 3D 431
rotating boundary (node)
  moving mesh 1119
rotating domain (node) 1117–1118
rotation
  controlling 429
rotation matrix 337
rotations, in sector data sets 1466
row index, in table graphs 1566
Runge-Kutta methods 1286
  particle tracing plots 1539
  time explicit integrator 1050
  time explicit solver 1264
  time stepping, wave form PDE 1049
runtime security settings 1625

S
saddle-point problems 1375
SAI preconditioner 1319
SAI preconditioner/solver 1361
sampling, of logs 1326
sandwich, layers and 505
save (button) 72
save model to file (node) 1403
saving
  global parameters 259
  models 78
  recovery files 79
saving files, options for 78
scalar coupling operators 346
scalars (node), reports 1596
scale (node)
  geometry 572
  meshes 657
scale factor, for solution 1468
scaling system (node) 369
scaling views 458, 462
scaling, of table plot data 1566
scatter surface and scatter volume (nodes) 1551
scene light 463
scene light (button) 432
SCGS (node) 1362
SCGS preconditioner 1310
scheduler arguments, adding to cluster job 1393
scheduler script 1637–1638
scheduler type 1203
schrodinger poisson study 1230
Schur complement methods 1306
Schur solver (node) 1364
Schwarz methods 1305
Schwarz solvers 1336
scientific notation 1473
scientific notation, in plots 1504, 1507, 1509–1510
SCP 1640
screenshots 1614
scroll lock (button) 1247
scroll wheel, for selections 409
search method
  for eigenfrequencies 1190
  for eigenvalues 1192
  for mode analysis 1215, 1226
search options, in application libraries 88
search region
  for eigenvalues 1190, 1192, 1261
  for mode analysis 1215, 1226
searching
  application libraries 88
  filenames 89
  for text 82
  geometry libraries 500
  help 47
  materials 698
section (node), reports 1594
sectionwise data formats

data export settings 1581
data export, and 1575
interpolation functions 325
sectionwise files, importing 680
sector (node), 2D and 3D data sets 1465
sector symmetries 1465
sector symmetry (node) 810
secure copy 1640
secure shell protocol 1640
security
restrictions 1625
settings 1624
security for client-server 1661
security issues in client/server mode
Windows 1647
security issues in client-server mode
Linux 1661
macOS 1673
Windows 1647, 1661, 1674
segregated (node) 1364
segregated iterations, substeps of 1366
segregated sensitivity solver 1317
segregated solution 1364
segregated step (node) 1366
select boundaries (button) 441
select objects (button) 425
selected entities
number of 422
selected geometric entities, indication of 411
selecting
adjacent entities 442, 450
drop rules for solvers 1302
geometric entities 416
in tables 65
interior boundaries 409
nodes 61
physics interfaces 106
space dimensions 105, 143, 476
study 107
study types 1152
unit systems 246
selecting using a rubberband box 425
selection (node) 1574
selection (node), creating 440
selection colors
showing 458, 461
selections
adding to data sets 1439
Boolean 447, 455
copying 421
creating 421, 440, 446, 453
creating from geometry objects 449
cumulative 456
entities in enclosing ball 442, 451
entities in enclosing box 444, 451
entities in enclosing cylinder 444, 452
entities in enclosing disk 445, 453
explicit 446, 453
indicating empty 162
moving to the next or previous 409
not applicable 162
pasting 421
pasting from files or clipboard 441
right-clicking to add 418
turning off in graphics 424
selections of resulting entities 456
selections, basic concepts for 411
self intersections, in parametric surfaces 524
semiconductor equilibrium study 1231
semiconductor initialization study 1231
semiconductor materials 772
sens operator 287
sensitivity
and segregated solver 1317
sensitivity (node) 1367
sensitivity (node), study 1213
sensitivity analysis 1090
sensitivity interface 1097
sequence (node) 1397
sequences, in COMSOL 142, 159
serendipity elements 1014, 1136
server, COMSOL Multiphysics
Linux 1660
macOS 1673
Windows 1646
server, starting 1629
servers
disconnecting 1630
initializing 1630
reconnecting 1631
set COMSOL Application Libraries root directory 86, 173
set formula, for Boolean operations 541
set part library root 499
setconst operator 287
setind operator 288
settings 102
settings forms 171
settings window
keyboard shortcut 137

units 227
settings windows 101
settings, cluster jobs 1203
setval operator 288
shape functions 1131
element types 182
equations, and 197
order of 1014
types 1014
variables 302
wave form PDE 1049
weak constraints, and 206
weak form, and 1005
shapeorder operator 288
shared memory mode 1634
shared-memory parallel mode 1622
shear modulus (material node) 734
shear modulus expression 975
shear-wave speed (material node) 734
shear-wave speeds 976
shell (node), 3D data set 1467
shift 1301
show (button) 101
Show in External Browser (button) 44
show more options (button) 73
Show More Options dialog box 250
show quick access toolbar 69
Show Table of Contents (button) 44
Show Topic (button) 44
show work plane (button) 582
showing
advanced physics options 250
batch feature 1623
batch, or batch and cluster 250
cluster computing 1636
equation sections 250
equation view 250
equation-based contributions 250
extra dimensions 250
geometric entities 433
legends on plots 1511, 1519, 1521–1523, 1527, 1536, 1544, 1549–1551, 1567
multigrid level 250
override and contribution 250
physics symbols 164
reduced-order modeling 250
sensitivity 250
solver and job configurations 250
stabilization 220, 250
variable utilities 250
views 250
weak constraints 1058
weak contribution on mesh boundaries 1054
work planes 605
shrinking elements 1430
side operator 288
sign functions 333
simplify mesh, at import 556
single layer materials 720
single-layer boundary potential 1039
single-phase flow interface
laminar flow 904
singleton nodes 177
singular value decomposition 337
singularities in geometry 475
size (node), meshes 657
size expression (node), meshes 659
Sketch toolbar 119
slice plot (node) 1552
sliding wall 910
slip, wall boundary condition 909
SLURM 1203
small-signal analysis
definition 1404
frequency-domain perturbation 1220
plots 1435
small-signal analysis, frequency domain (node) 1232
Smith plot group (node) 1505
smoothed aggregation AMG 1356
smoothed rectangle function 333
smoothed step functions 333
smoothers
efficiency of 1313
Vanka 1319
smoothing
of filter datasets 1448
of plot data 1581
smoothing discontinuous functions 333
smoothing threshold
for data export 1582
for filter datasets 1449
smoothing zone, for step functions 333
smpd command 1654
snapping
to geometry 118
to grid 118
SNOPT solver 1249
sockets 1625
sockets, to use 1644, 1658
software rendering 410

software updates 50
solid (button) 506
solid (node) 963
solid mechanics
  damping 976
  edge loads 982
solid mechanics interface 970
solution (node) 1403
solution (node), data sets 1468
solution process, stop buttons 1244
solution store (node) 1383
solution times, for models 84
solutions
  clearing 178
  combining 1157
  copying 1154
  stepping through 1502, 1507
  using from previous study steps 1177
solve for (button) 1181
solve for, analysis case 163
solved MPH-files 76
solver
  adding loops in 1382
solver configurations (node) 1153
solver configurations, deleting 1154
solver log 1325
solver settings 964
solvers
  algebraic multigrid 1312
  canceling 1244
  configurations 1150, 1155
  conjugate gradients 1307
  continue operation 1244
  definition 1153
  deleting 178
  dense matrix 1301
  events 1069
  FFT 1273
  FGMRES 1307
  geometric multigrid 1311
  GMRES 1307
  hierarchical structure of 1243
  logs from 1246
  PARDISO 1300
  running configurations 1242
  sequences 1150
  SPOOLES 1300
  used by multiphysics interfaces 190
solving
  getting results while 1243
  plotting while 377
SOR (node) 1367
SOR gauge (node) 1368
SOR line (node) 1369
SOR vector (node) 1369
sound hard boundary (wall) (node) 831
sound soft boundary (node) 833
source (node), domains 1024
source maps 347
source nodes, going to 177
source term
  for two-variable PDE 1000
source, for component couplings 345
space charge density (node) 796
space dimensions
  component node 106
  geometry 476
  geometry, selecting 143
  physics nodes 156
  selecting 105
  units and 237
space-separated list 304
space-time derivatives 303
Sparse Approximate Inverse (SAI) (node) 1361
sparse approximate inverse preconditioner 1319
sparse approximate inverse preconditioner/solver 1361
sparsity pattern, reusing 1326
spatial at operators 288
spatial coordinate variables 298
spatial frames 921
  deformed meshes 1104
special operators, evaluating results 273
species properties (material node) 725
specific heat capacity
  fluid 936
  solids 938
spectrum color table 1423
specular exponent 706
specular highlight 706
specular light 463
sphere (node) 531
sphere operators 277
sphere radius
  keeping constant 1427
spherical system (node) 370
spherical wave radiation (node) 834
split (node), geometry objects 573
split complex variables 1066
split geometric entities 683
sponge layers 395

SPOOLES solver
definition 1300
direct attribute, and 1331
direct node, and 1333, 1349
Incomplete LU node, and 1348–1349
parallel operations, and 1634
spot diagram (node) 1553
spotlight (node) 467
spreadsheet data formats
data export settings 1581
interpolation functions 324
square (node) 532
SSH 1640
SSOR update 1320
stabilization settings 103
stabilization techniques 219
crosswind diffusion 224, 921, 961
Galerkin least-squares (GLS) 224
isotropic diffusion 921
streamline diffusion 223, 921
SUPG 223
stabilized convection-diffusion equation (node) 1024
standard deviation 1434
standard notation, classical PDEs 995
standard settings 101
standard simplex 1130
starting a COMSOL Multiphysics server 1629
state (node) 1370
state space (node) 1384
state variable
indicating change 1061
state variables (node) 265
stationary (node) 1184
stationary acceleration (node) 1371
stationary free surface (node) 1223
stationary PDE problems 1252
stationary plug flow (node) 1235
stationary segregated solver algorithms 1314
stationary solver (node) 1282
stationary source sweep (node) 1235
stationary study 920
stationary value 1252
stationary with initialization (node), electrochemistry 1218
stationary with initialization (node), fluid flow 1236
stationary, fluid (node) 1234
stationary, one-way coupled (node) 1233
stationary, one-way coupled with initialization (node) 1233
stationary, one-way coupled with initialization, NITF (node) 1237
stationary, one-way coupled, MF (node) 1235
stationary, one-way coupled, NITF (node) 1234
stationary, solid (node) 1234
statistics, solvers 1383
stddev operator 289
step (node), functions 331
step functions 333
stepping through expressions 1415
stepping through solutions 1502, 1507
sticky help (button) 44
stiffness matrix
correct versus incorrect 1252
symmetric 1299
STL files 555
STL files, exporting for 3D plots 1586
STL files, importing 680
Stokes equations 1256
stop all processes (button) 1250
stop condition 1113
stop condition (node) 1372
stop process (button) 1250
stop sign definition, materials 705
storage formats on clusters 1639
store fields in output 1173
storing copy of solution 1154
storing parametric results 1397
storing solution
for all intermediate study steps 1153
storing, solutions in output 1343
straight edges, detecting 682
strain-charge form (material node) 729
strain-magnetization form (material node) 728
stratified porous media 853
stream ribbons 1428
streamline (node) 1556
streamline diffusion
consistent stabilization method 219
definition 223
streamline surface (node) 1561
streamline upwind Petrov-Galerkin (SUPG) 223
streamlines
length of 1586
stress tensor 1546
stress-charge form (material node) 729
stress-magnetization form (material node) 728
stretch matrix 337
structured Cam-clay (material node) 737
study
branch 147

including physics interfaces 1178
referring to 1158
selecting 107
toolbar 127
study (node) 1153
study extension steps 1155
study reference (node) 1158
study steps 1162
Model Builder, and 1150
selecting physics interfaces and variables 1178
study types
list of 1162
selecting 1152
study types in equation views 199
style sheet, for reports 1591
subbranches 141
subst operator 289
subtracting
geometry, example 596
objects from Boolean operations 550
successive over-relaxation methods 1367
suffixes for report files 1591
sum operator 289
summation 1444
superficial volume averages, porous media 850
SUPG. See streamline upwind Petrov-Galerkin
Supporting Electrolytes 847
suppressing small numerical pars 1016
surface (node)
data sets 1468
plots 1564
surface average (node) 1475
surface charge density (node) 797
surface current (node) 821
surface data (node) 1564
surface emissivity 944
surface equilibrium reaction (node) 872
surface integration (node) 1476
surface maximum and minimum (nodes) 1477
surface plots
maximum and minimum 1527
vs. two parameters 1567
surface slit (node) 1565
surrounding volumes 382
SVD 337
sweep (node), geometry 573
sweep types 1177
sweeping
functions 1208
materials 1209
swept (node), meshes 663
swept meshes 620
Swift (material node) 735
switch functions 316, 709
switch materials 316, 709
symbols for physics 164
symmetric Jacobian matrix 1299
symmetric matrix, materials 195
symmetric reaction terms 204
symmetric Schwarz solver 1336
symmetric stiffness matrix 1299
symmetric successive over-relaxation method 1317
symmetrically coupled Gauss-Seidel solver 1362
symmetries, and sector data sets 1465
symmetry (node) 104, 834, 912, 945
solid mechanics 979
transport of diluted species 867
symmetry axis, in plots 1508
symmetry, using 181
symmetry/roller (node)
moving mesh 1120
synchronizing, batch jobs and GUI 1200, 1208
syntax errors 168, 258
system from geometry (node) 371
system information, showing 50
system matrix (node) 1482
system properties 1625

T

table (node), exports 1583
table (node), reports 1594
table data
notation for 1473
table data, copying 1473
table graph (node), plots 1565
table of contents (node) 1594
table plot data
preprocessing 1566
table surface (node), plots 1567
tables
clearing and deleting 1484
column headers in 1485
displaying results directly 1470
evaluating for derived values 1483
resizing 65
selecting in 65
settings window 1472
subbranch 148
tags 102
tags, for nodes 152
tags, HTML 1419

tangent (node), geometry 576
tangent variables 298
tangential derivative variables 303
  for Argyris elements 1138
  for bubble elements 1139
  for curl elements 1145
  for discontinuous elements 1145
  for divergence elements 1146
  for Hermite elements 1137, 1139
  for Lagrange elements 1135
tangential derivatives, of normal vector 300
tangential direction, derivatives in 279
Taylor expansion, for AWE 1267
technical support, COMSOL 42
tem boundary mode analysis (node) 1216
temperature (node)
  heat transfer interface 946
temperature, constraint 202
template (node) 1589
template file, for reports 1591
template group toolbar 133
temporal averages 1470
terminating distance 1559
termination criterion 1314
tessellation methods 652
test function 1005
test operator 290, 1007
tetrahedral elements, meshes 617
tetrahedron (node) 533
text (node), reports 1594
text formatting and symbols 1419
text formatting tools
  for reports 1595
TFQMR, iterative solver 1350
theory
  constitutive relations 779–780
  electric currents interface 787
  electric fields 784
  electromagnetics 779
  electrostatics interface 784
  heat transfer in fluids interface 918
  heat transfer in solids interface 918
  magnetic and electric fields 789
  magnetic fields interface 788
  pressure acoustics, frequency domain (acpr) interface 837
  transport of diluted species in porous media interface 842
  transport of diluted species interface 842
  wall distance interface 1075
  wave form PDE 1049
thermal color tables 1423
thermal conductivity, mean effective 938
thermal diffusivity 939
thermal insulation 958
thermal insulation (node) 923, 925, 946
thermoacoustics model (material node) 725
thickness 921
  fracture 881
  out-of-plane 934
thin diffusion barrier (node) 870
Thin Impermeable Barrier 870
thin layer (node) 947
thin low permittivity gap (node) 799
third-degree curve 504
thread safe, external material DLLs 760
threshold drop rule 1302
through thickness (node), plots 1568
throughput mode
  Linux 1658
  Mac 1671
  Windows 1644
thumbnails
  root node 241
  saving 1619
thumbnails, model images 1619
TIFF format 1585
time average (node)
  data set 1469
time dependent with initialization (node) 1236
time dependent with phase initialization (node) 1238
time dependent, fluid (node) 1234
time dependent, modal reduced-order model 1196
time dependent, one-way coupled (node) 1233
time dependent, one-way coupled with initialization, NITF (node) 1237
time dependent, one-way coupled, MF (node) 1235
time dependent, one-way coupled, NITF (node) 1234
time dependent, solid (node) 1234
time derivatives 1107
  constraints for 1012
  variables, and 303
time discrete (node) 1188
time discrete solver (node) 1292
Time domain, modal reduced-order model (node) 402
time domain, prestressed, modal (node) 1228
time explicit solver (node) 1293
time integral (node) (data set) 1469
time parametric (node) 1373
time stepping, tolerances 1259

time variable 294
time, in plot titles 1418
timeavg operator 290
time-dependent (node) 1186
time-dependent mesh adaptation 1303
time-dependent PDEs 1252
time-dependent solver (node) 1284
time-dependent solver algorithms 1258
time-dependent study 920
time-dependent with initialization (node) 1218
time-dependent with initialization, fixed geometry (node) 1218
time-dependent, fixed geometry (node) 1219
time-dependent, modal (node) 1188
time-discrete solver 1260
time-harmonic study
  pressure acoustics 837
timeint operator 290
timemax operator 290
timemin operator 290
timestamps, in messages 75
timestep, variable 304
title page (node) 1593
titles for plots 1417
tmpdir 1643
toggle hide (button) 63
tolerance
  absolute and relative 1259
  edge 1539
  relative 1538
toolbar
  contextual 70
  cross-section plots 1493
  external process window 1250
  geometric entities 416
  geometry 116, 118, 502
  graphics window 426
  main menu 71
  model 70
  Model Builder 68
  results tables 1472
toolbar button label 70
toolbar display mode 70
toolbars and menus 68
tools menu, macOS and Linux 70
top hat functions 331
topic-based help 43
topic-based information 43
tortuosity factors 852
torus (node) 534
total energy flux variable 954
total heat flux variable 954
total normal heat flux variable 955
trace operator 1039
traction boundary conditions 913
traffic color tables 1423
trajectories, of points 1544
transformation matrix 356
transformation, of parametric extrusion level 1457
transformations, of global matrices 1478
transforms menu
  arrays 539
  copy 546
  mirror 559
  move 560
  rigid transform 569
  rotate 570
  scale 572
transient signal 184
transient, one-way coupled with initialization (node) 1233
translation vector 356
translational heat flux variable 954
translational motion (node) 940
transparency 461
transparency (button) 432
transport of diluted species in porous media interface 860
  theory 842
transport of diluted species interface 857
  theory 842
treatasconst operator 290
triangle (node), functions 332
triangular elements, meshes 617
truncation error 1184
try_catch operator 290
tube contours 1515
Tukey window 1275
turbulent mixing (node)
  transport of diluted species 863
turnaround mode
  Linux 1658
  Mac 1671
  Windows 1644
TVB constant 1321
twilight color table 1424
twist compensation 574
two y-axes 1503
two-point map (node)
  component couplings 353
  meshes 665
types, for nodes 152

typical wave speed 389
typographical conventions 50

U unbounded domains, modeling 382
undefined quantities, evaluating 1415
undefined values
  checking for 1326
  location of 1153
undo (button) 73
undo last operation 177
unexpected units 168
ungroup nodes 244
Unicode-based characters 1419
unidirectional constraints 205
uniform distribution, random functions 331
union (node)
  geometry 576
  selections 447
union selection (node), geometry 455
unit circle in Nyquist plots 1531
unit systems
  British engineering units 82
  CGSA 81
  EMU 82
  ESU 82
  FPS 82
  gravitational IPS 82
  IPS 82
  MPa 82
  none 82
  selecting 246
  SI 81
  switching 235
units
  and space dimensions 237
  for function inputs/outputs 317
  for PDE interfaces 1017, 1066
  of variables 197
  on axis 458
  scaling values when changing 484
  standard prefixes for 226
  unexpected or unknown 168
unphysical values 185
UNS number 698
unstructured mesh 618
unstructured VTK files, exporting to 1580, 1586
up operator 291
updating
  COMSOL Application Libraries 91
  COMSOL software 50
  plots 1408
updating the COMSOL Application Libraries 90
updating the COMSOL Part Libraries 92
upside, of normals 300
use weak constraints, check box 205
user add-in library 173
user application library 85
  custom folder icon 85, 173
  enabling PDF documents 87, 498
user defined anisotropic materials 102
user part library 499
  adding 499
  custom folder icon 499
user-controlled meshes 629
user-defined (node), curvilinear coordinates 1080
user-defined functions 317
user-defined library, materials 742
user-defined material libraries 694
  creating 742
  editing 744
user-defined property group 709
using
  ranges 305
utility nodes 1151
utility nodes, solvers 1151, 1379

V value types
  complex variables 1016
  global equations 1066
values, of dependent variables 1172
Vanka (node) 1375
Vanka algorithm 1319
Vanka preconditioner/smoother 1310
var operator 291
Varga (material node) 738
variable name 268, 378
variable utilities (node) 262
variables
  absolute tolerance 1285
  built-in 310
  creating 260
  differentials of on boundary 280
  editing 196
  editing definition 196
  eigenvalue 295
  expressions, inserting into 378, 1414–1415
  field node, solvers 1329, 1342
  for boundary fluxes 1016
  for far fields 1546
  for Lagrange multipliers 303

for material properties 695
for spatial coordinates 298
frequency 295
geometric 296
geometric scope 294
Lagrange element 302
mathematical functions 270
meshelement 1575
namespace for 293
naming conventions 293
parameterization 298
PDE interfaces 992
predefined 293
refpnt 971
reserved names 258
selecting for study 1178
sensitivity solvers 1315, 1367
shape functions 302
solver 304
solver node 1269
study types, and 1172
tangent and normal 298
tangential derivative 303
time 294
view on statistics page 1383
variables (node) 260
variance 1434
VBA files 77
V-cycles 1312
vector components, in arrow surface plots 1514
vector elements
curls elements and 1139
postprocessing with 1139
preconditioners for 1310, 1370
vector iterative method 1369
vector plots, coordinate systems for 1416
vector-valued expressions and ranges 304, 306
velocity (Lorentz term) (node) 819
version numbers, adding to models 242
vertex 408
vertices, definition 408
view (node) 457
view 3D (node) 459
view all (button) 434
view scaling 458, 462
view toolbar 133
viewing
deformed meshes 1114
equations 196, 199
geometry sequences, example 599
licenses and used products 246
node names and tags 152
node properties 241
views
1D and 2D user-defined 457
camera position 461
default 429
geometry, hiding 434
Graphics window, and 429
lighting, transparency, and wireframe rendering 432
user-defined, creating 457
zooming 429
virtual geometry operations 586
virtual memory 182
virtual operations menu
collapse edges 587
collapse face regions 588
collapse faces 587
form composite domains 588
form composite edges 588
form composite faces 589
ignore edges 589
ignore faces 590
ignore vertices 590
merge edges 591
merge vertices 591
mesh control domains 591
mesh control edges 592
mesh control faces 592
mesh control vertices 592
viscous model (material node) 725
Visual Basic for Applications files 77
visual feedback icons 163
visualization. in work plane 486
Voce (material node) 735
volume (node), plots 1570
volume average (node) 1475
volume force (node) 908
volume integration (node) 1476
volume maximum and minimum (nodes) 1477
volume plots
filtering elements in 1430
maximum and minimum 1527
principal stress 1545
volume, of geometry 313
volumetric heat capacity 939
VRML files, importing 680
VTK files, exporting to 1580, 1586

W wall (node)

curvilinear coordinates 1082
single-phase flow 909
wall distance interface 1073
wall distance continuity (node) 1073
wall distance initialization (node) 1236
wall distance interface 1072
theory 1075
wall, constraint 202
Wang-Brown (material node) 739
warning (node)
geometry 169
warning sign definition, materials 705
warnings
errors, and 167
state space log 1385
stationary solver log 1284
time-dependent solver log 1291
warnings (node)
postprocessing 169
solvers 169
waterfall (node), plots 1570
wave color tables 1423
wave equation (node) 1024
wave form PDE (node) 1043
wave form PDE interface 1042
theory 1049
wave numbers 837
wave speeds 975
waveform (node), functions 332
wavelength domain (node) 1238
W-cycles 1312
weak constraint (node) 104, 1058
weak constraint settings 102
weak constraints 206
weak contribution (node) 104
ODEs and DAEs 1067
PDEs 1053
weak contribution on mesh boundaries (node) 104, 1054
weak form interfaces 1019
weak form PDE (node) 1023
weak-form expressions 196, 198
WebM file format 1576
websites, COMSOL 43
Weertman (material node) 736
weights, for scales in Newton solver 1345
WENO 1321
whirl (node), plots 1571
widescreen displays 240
window function, for FFT 1274
window titles, customizing for plots 1504, 1507
Windows
ini file 1642
windows
closing 62
default layout 59
moving between 61
on the COMSOL Desktop 62
Windows graphical user interface 1622
Windows HPC cluster 1623
Windows HPC Pack 2012 1203
Windows HPC Server 2008 1203
windows menu, macOS and Linux 70
Winslow smoothing 1110
wireframe rendering (button) 432
with operator 291
withsol operator 292
work plane (node) 577
work plane clipping (button) 583
work plane toolbar 121
work planes 582

Y

y-axes, two 1503
year, units 231
Yeoh (material node) 738
Yeoh smoothing 1110
yield stress parameters (material node) 741
Young's modulus (material node) 734
Young's modulus expression 975

Z

zenith axis, spherical coordinate systems 370
Zernike polynomials 310, 1481, 1535
zero charge (node) 796
zero curvature 520
zero flux (node)
mathematics interfaces 1026
PDE, boundary elements 1035
wave form PDE 1046
zero normal mesh displacement (node)
deformed geometry 1128
moving mesh interface 1124
zero normal mesh velocity (node)
deformed geometry 1127
moving mesh interface 1124
zero padding, of FFT 1275
zoom box (button) 429
zoom extents
for image snapshots 1615, 1617
for images 1585
for printing 1614
zoom extents (button) 429
zoom to selection (button) 421

zooming 429
in graph plots 436
zooming and rotating, in 3D 431